REGISTERED No. C209.

No. 14 of 1905.

The Calcutta Gazette.

WEDNESDAY, APRIL 5, 1905.

CONTENTS.

	Page
PART I.—Orders and Notifications by the Lieutenant-Governor of Bengal, the High Court, Government Treasury, etc.	631—638
PART IA.—Orders and Notifications by the Government of India	99
PART IB.—Orders by the Lieutenant-Governor of Bengal	61—63
PART II.—Advertisements	391—400
PART III.—Acts of the Bengal Council	Nil
PART IV.—Bills of the Bengal Council	Nil
PART IVA.—Proceedings of the Bengal Legislative Council:—	
Proceedings of the Meeting, dated the 31st March 1905	101—105
PART V.—Acts of the Governor-General's Council assented to by the Governor-General	Nil
PART VI.—Bills introduced into the Council of the Governor-General for making Laws and Regulations or published under Rule 23	Nil
SUPPLEMENT No. 14:—	
Statistical Return of Crops, Results of Meteorological Observations, Railway Traffic Receipts, etc., etc.	407—507

PART I.

Orders and Notifications by the Lieutenant-Governor of Bengal, the High Court, Government Treasury, &c.

ORDERS BY THE LIEUT.-GOVERNOR OF BENGAL.

No. 2645A.

APPOINTMENTS AND TRANSFERS.

GENERAL.—*No. 2461A.—The 30th March 1905.*—Mr. E. A. Gait, I.C.S., on special duty,

Calcutta. is appointed to act as Secretary to the Government of Bengal, Financial and Municipal Departments, during the absence, on deputation, of the Hon'ble Mr. L. P. Shirres, or until further orders.

No. 2463A.—The 30th March 1905.—Babu Subodh Chandra Ray, B.A., a passed student

Backergunge. of the Agricultural Class, Sibpur Civil Engineering College, is appointed to be a Probationary Deputy Collector and is posted to the head-quarters station of the Backergunge district.

No. 2475A.—The 30th March 1905.—Babu Gopal Bullub Das, Deputy Magistrate and

Gaya. Deputy Collector, on leave, is posted to the head-quarters station of the Gaya district.

No. 2477A.—The 30th March 1905.—Maulvi Syed Ali Hasan, Deputy Magistrate and

Gaya. Deputy Collector, Gaya, is transferred to the head-quarters station o

Backergunge. the Backergunge district.

No. 2513A.—The 31st March 1905.—Babu Sasibhusan Satpathi, Probationary De

Cuttack. Collector, is appointed substantively *pro tempore* to the eighth of Deputy Magistrates and Deputy Collectors, and is

quarters station of the Cuttack district.

No. 2520A.—The 31st March 1905.—Mr. J. Cornes, Officiating Magistrate and Collector, Murshidabad, is appointed to act, until further orders, as Magistrate and Collector, Balasore, *vice* Mr. W. Egerton, on leave.

Murshidabad.
Balasore.

No. 2533A.—The 1st April 1905.—Babu Brij Bansi Sahai, Deputy Magistrate and Deputy Collector, is appointed to have charge of the Madhipura subdivision of the Bhagalpur district, on being relieved of his present appointment as Officiating Personal Assistant to the Commissioner of the Patna Division.

Patna.
Bhagalpur.

No. 2539A.—The 1st April 1905.—Mr. J. S. Davidson, Deputy Magistrate and Deputy Collector, Kendrapara, Cuttack, is appointed to have charge of the Bihar subdivision of the Patna district.

Cuttack.
Patna.

No. 2541A.—The 1st April 1905.—Babu Nogendra Chunder Sen, Deputy Magistrate and Deputy Collector, Bankura, is appointed to have charge of the Kendrapara subdivision of the Cuttack district.

Bankura.
Cuttack.

No. 2543A.—The 1st April 1905.—Babu Arun Kumar Bose, Deputy Magistrate and Deputy Collector, Nadia, is transferred to the head-quarters station of the Bankura district.

Nadia.
Bankura.

No. 2587A.—The 4th April 1905.—Mr. J. A. L. Swan, Assistant Magistrate and Collector, Gopalganj, Saran, is transferred to the head-quarters station of the 24-Parganas district.

Saran.
24-Parganas.

No. 2589A.—The 4th April 1905.—Mr. W. H. Buchan, Assistant Magistrate and Collector, Saran, is appointed to have charge of the Gopalganj subdivision of that district.

Saran.

No. 2591A.—The 4th April 1905.—Mr. H. K. Briscoe, Assistant Magistrate and Collector, Patna, is appointed to have charge of the Meherpur subdivision of the Nadia district.

Patna.
Nadia.

No. 2593A.—The 4th April 1905.—Mr. W. D. R. Prentice, Assistant Magistrate and Collector, Meherpur, Nadia, is appointed to have charge of the Sadar subdivision of the Howrah district.

Nadia.
Howrah.

No. 2595A.—The 4th April 1905.—Mr. L. C. Adami, Assistant Magistrate and Collector, is appointed to act, until further orders, in the first grade of Joint-Magistrates and Deputy Collectors, and is posted to the head-quarters station of the Darjeeling district, on being relieved of his appointment as Officiating Secretary to the Bengal Council and Assistant Secretary to the Government of Bengal in the Legislative Department.

Calcutta.
Darjeeling.

No. 2610A.—The 4th April 1905.—Mr. R. C. Hamilton, Joint-Magistrate and Deputy Collector, Patna, is transferred to the head-quarters station of the Saran district.

Patna.
Saran.

VOLUNTEERS.—*No. 2480A.—The 30th March 1905.*—Captain Edward Herbert Boome, 88th Carnatic Infantry, is appointed to be Adjutant of the Assam-Bengal Railway Volunteer Rifles, with effect from the 27th February 1905, *vice* Major B. P. S. Rooke, resigned.

EDUCATION.—*No. 2603A.—The 4th April 1905.*—Mr. Frederick Walford, Head Master of the Bihar School of Engineering, is confirmed in the Provincial Educational Service, with effect from the 2nd December 1900.

Patna.

ECCLESIASTICAL.—*No. 2549A.—The 1st April 1905.*—Elder David Whisler Zook, President of the Premananda Faith Missionary Association, Bankura, is authorised, under section 6 of Act XV of 1872, to solemnize marriages between persons, one of whom is a Christian or both of whom are Christians, and, under section 9 of the Act, to grant certificates of marriage between persons who are Native Christians.

Bankura.

Elder David Whisler Zook is also appointed, under Act VI of 1886, to be a Registrar of Births and Deaths in Bankura.

LEAVE.

GENERAL.—*No. 2459A.—The 30th March 1905.*—The Hon'ble Mr. L. P. Shirres, Secretary to the Government of Bengal, Financial and Municipal Departments, is allowed, combined leave for seven months and fourteen days, with effect from the afternoon of the 6th April 1905, viz., privilege leave for two months and twenty days, under article 269 of the Civil Service Regulations, and furlough for the remaining period under article 303 (*b*) of the Regulations.

Calcutta.

No. 2492A.—The 31st March 1905.—Mr. H. Savage, C.S.I., on special duty, is allowed leave for two months and seventeen days, under article 260 of the Civil Service Regulations, with effect from the 25th April 1905, or any subsequent date on which he may avail himself of it.

No. 2519A.—The 31st March 1905.—Mr. W. Egerton, Magistrate and Collector, Balasore, is allowed combined leave for eight months, with effect from the 4th April 1905, or any subsequent date on which he may avail himself of it, viz., privilege leave for one month and eight days under article 269 of the

Civil Service Regulations, and furlough for the remaining period under article 308 (*b*) of the Regulations

No. 2532A.—The 1st April 1905.—Mr. A. H. W. Bentinck, Officiating Joint-Magistrate and Deputy Collector, Madhipura, Bhagalpur, is allowed combined leave for six months, with effect from the 20th April 1905, or any subsequent date on which he may be relieved, viz., privilege leave for three months, under article 230 of the Civil Service Regulations, and special leave for the remaining period under article 316 of the Regulations.

Bhagalpur.

No. 2537A.—The 1st April 1905.—Mr. J. T. Baboneau, Deputy Magistrate and Deputy Collector, Bihar, Patna, is allowed leave for three months, under Article 260 of the Civil Service Regulations, with effect from the date on which he may avail himself of it

Patna.

No. 2562A.—The 3rd April 1905.—Mr. S. H. Counsell, substantive *pro tempore* Deputy Magistrate and Deputy Collector, Murshidabad, is allowed leave for seven days, under article 260 of the Civil Service Regulations, in extension of the leave granted to him under the order of the 20th February 1905.

Murshidabad.

No. 2583A.—The 4th April 1905.—Babu Nityananda Ghose, Deputy Magistrate and Deputy Collector, is allowed leave for two months, under article 336 of the Civil Service Regulations, in extension of the leave granted to him under the order of the 9th December 1904.

No. 2585A.—The 4th April 1905.—Babu Siva Prasanna Sen, Deputy Magistrate and Deputy Collector, Bhagalpur, is allowed leave for three months, under article 260 of the Civil Service Regulations, with effect from the 15th March 1905.

Bhagalpur.

No. 2605A.—The 4th April 1905.—Babu Ashutosh Mookerjee, Deputy Magistrate and Deputy Collector, Cuttack, is allowed leave for six weeks, under article 260 of the Civil Service Regulations, with effect from the 2nd May 1905.

Cuttack.

No. 2619A.—The 4th April 1905.—Mr. J. E. Friend-Pereira, Deputy Magistrate and Deputy Collector, Mymensingh, is allowed combined leave for eight months, viz, privilege leave for three months, under article 260 of the Civil Service Regulations, and furlough for the remaining period, under article 338 of the Regulations, with effect from the date on which he may avail himself of it.

Mymensingh.

POLICE.—*No. 2536A.—The 1st April 1905.*—Mr. E. H. Corbett, Officiating District Superintendent of Police, Tippera, is allowed combined leave for six months, under articles 233 and 316 of the Civil Service Regulations, with effect from the 1st May 1905, viz., privilege leave for three months and special leave for the remaining period.

Tippera.

DISMISSAL.

GENERAL.—*No. 2607A.—The 4th April 1905.*—Maulvi Mohammad Quaem, substantive *pro tempore* Deputy Magistrate and Deputy Collector, Birbhum, is removed from the service of Government.

Birbhum.

POWERS.

GENERAL.—*No. 2505A.—The 31st March 1905.*—Babu Annadaprasada Basu, Deputy Collector, Hooghly, is vested with the powers of a Collector, under Act I of 1894, in that district.

Hooghly.

No. 2545A.—The 1st April 1905.—Babu Rai Krishna Bahadur, Deputy Collector, Shahabad, is vested with the powers of a Collector, under Act I of 1894, in that district.

Shahabad.

No. 2578A.—The 4th April 1905.—The Deputy Collectors named below in the district of Rangpur are vested with the powers of a Collector, under Act I of 1894, in the subdivision mentioned opposite the name of each :—

Rangpur.

Babu Bisveswar Bhattacharya	...	... Nilphamari.
„ Suresh Chunder Sen	...	... Gaibanda.

R. W. CARLYLE,
Offg. Chief Secy. to the Govt. of Bengal.

REVENUE DEPARTMENT.

NOTIFICATIONS.

No. 2009For.—The 3rd April 1905.—Mr. W. R. LeG. Jacob, Assistant Conservator of Forests, attached to the Buxa Division, is appointed to relieve Mr. J. L. Baker, Officiating Deputy Conservator of Forests, of the charge of the Direction Division and of the duties of Personal Assistant to the Conservator of Forests, Bengal.

Buxa Division.

Cuttack. *No. 1884L.R.—The 31st March 1905.*—Under section 4 of the Bengal Survey Act, V (B.C.) of 1875, Babu Balmukund Kanungo, Sub-Deputy Collector, is appointed to be an Assistant Superintendent of Survey for the purpose of carrying out the survey of the Banki Government estate in the district of Cuttack.

Cuttack. *No. 1885L.R.—The 31st March 1905.*—Babu Balmukund Kanungo, Sub-Deputy Collector, is authorised, under section 3 (17) of the Bengal Tenancy Act, VIII of 1885, as amended by Act III (B.C.) of 1898, to discharge the functions of a Revenue Officer, under the provisions of that Act, so far as they relate to Revenue Officers, for the purposes of a survey and the preparation of a record-of-rights in the Banki Government estate in the district of Cuttack.

He is also vested with the powers of a Settlement Officer under Rule 1, Chapter VI of the Government Rules under the Bengal Tenancy Act.

Cuttack. *No. 1886L.R.—The 31st March 1905.*—Under section 4 of the Bengal Survey Act, V (B.C.) of 1875, Maulvi Mafijuddin Muhammad is appointed to be an Assistant Superintendent of Survey for the purpose of carrying out the survey of the Banki Government estate in the district of Cuttack.

Cuttack. *No. 1887L.R.—The 31st March 1905.*—Maulvi Mafijuddin Muhammad is appointed to be an Assistant Settlement Officer in the district of Cuttack. He is authorised, under section 3 (17) of the Bengal Tenancy Act, VIII of 1885, as amended by Act III (B.C.) of 1898, to discharge the functions of a Revenue Officer, under the provisions of that Act, so far as they relate to Revenue Officers, for the purposes of a survey and the preparation of a record-of-rights in the Banki Government estate in the district of Cuttack.

He is also vested with the powers of an Assistant Settlement Officer under Rule 1, Chapter VI of the Government Rules under the Bengal Tenancy Act.

Ranchi. *No. 1888L.R.—The 30th March 1905.*—With reference to the provisions of section 3 (1) (*a*) of the Chota Nagpur Commutation Act, IV (B.C.) of 1897, as amended by Act V (B.C.) of 1903, the Lieutenant-Governor of Bengal is pleased to appoint Babu Lalit Kumar Sen to discharge, in the district of Ranchi, the functions of a Revenue Officer for the purpose of commuting predial conditions and services under section 9A of that Act.

Ranchi. *No. 1889L.R.—The 30th March 1905.*—Babu Lalit Kumar Sen is authorised, under section 3 (17) of the Bengal Tenancy Act, VIII of 1885, as amended by Act III (B.C.) of 1898, to discharge the functions of a Revenue Officer, under the provisions of that Act, as extended to the Chota Nagpur Division, excepting the district of Manbhum, by Government Notification No. 721L.R., dated the 9th February 1903, so far as they relate to Revenue Officers, for the purpose of carrying out the survey and record-of-rights in the district of Ranchi.

He is also vested with the powers of an Assistant Settlement Officer in the district under rule 1, Chapter II of the Rules under the Bengal Tenancy Act for the Chota Nagpur Division (except the district of Manbhum) published under Government Notification No. 3395L.R., dated the 24th November 1903.

Ranchi. *No. 1890L.R.—The 30th March 1905.*—Under section 4 of the Bengal Survey Act, V (B.C.) of 1875, the Lieutenant-Governor of Bengal is pleased to appoint Babu Lalit Kumar Sen to be an Assistant Superintendent of Survey in the district of Ranchi.

Ranchi. *No. 1891L.R.—The 30th March 1905.*—Babu Lalit Kumar Sen appointed to be an Assistant Settlement Officer in the district Ranchi.

Sonthal Parganas. *No. 1910L.R.—The 31st March 1905.*—Mr. H. McPherson, I.C.S., Settlement Officer in the Sonthal Parganas, is allowed combined leave, under article 233 of the Civil Service Regulations, for 11 months and 21 days, viz., privilege leave under article 260 of the Civil Service Regulations for one month and twenty-five days, with effect from the 17th April 1905 or any subsequent date on which he may avail himself of the leave, and furlough under article 308 (*b*) of the Regulations for the remaining period.

Sonthal Parganas. *No. 1913L.R.—The 31st March 1905.*—Mr. H. Ll. L. Allanson, I.C.S., Assistant Settlement Officer in the Sonthal Parganas, is appointed to be the Settlement Officer of the district.

No. 1985.—The 3rd April 1905.—Babu Bireswar Sanyal is appointed to be an Assistant Settlement Officer in the districts of Purnea, Bhagalpur and Monghyr, and is authorised, under section 3 (17) of the Bengal Tenancy Act, VIII of 1885, as amended by Act III (B.C.) of 1898, to discharge the functions of a Revenue Officer in those districts, under the provisions of that Act so far as they relate to Revenue Officers.

Purnea, Bhagalpur and Monghyr.

He is also vested with the powers of an Assistant Settlement Officer under Rule 1, Chapter VI of the Rules under the Bengal Tenancy Act.

No. 1986.—The 3rd April 1905.—Under section 4 of the Survey Act, V (B.C.) of 1875, Babu Bireswar Sanyal is appointed to be an Assistant Superintendent of Survey in the districts of Purnea, Bhagalpur and Monghyr.

Purnea, Bhagalpur and Monghyr.

No. 1987 L.R.—The 3rd April 1905.—In Declaration No. 1962T.R., dated the 9th September 1904, published at page 1282, Part I of the *Calcutta Gazette* of the 14th idem, *for* the words "and that no galleries are to be driven where the vertical depth to the top of the coal seam is less than 50 feet" *read* "and that no galleries are to be driven in the upper section of the seam where the distance from the top of the galleries (if driven) to the surface would be less than 50 feet, nor in the bottom section of the seam where the distance to the surface above this section is less than 50 feet."

No. 2008 L.R.—The 3rd April 1905.—Babu Barendra Krisna Das Adhicary, M.A., is appointed to be an Assistant Settlement Officer in the district of Midnapore with effect from the 1st April 1905.

Midnapore.

No. 2017 L.R.—The 4th April 1905.—Mr. J. C. Jack, I.C.S., Assistant Settlement Officer in Backergunge, is appointed to act as Settlement Officer of Eastern Bengal during the absence of Mr. N. D. Beatson Bell or until further orders.

Backergunge.

CHARITABLE ENDOWMENTS ACT, 1890.

IN THE MATTER OF BABU JOY GOBIND LAW'S FUND FOR THE RELIEF OF FAMINE-STRICKEN PEOPLE IN BENGAL.

No. 2005 Agri.—The 3rd April 1905.—Whereas an application has been made to the Government of Bengal by Babu Joy Gobind Law, C.I.E., of No. 24 Suken's Street, in the town of Calcutta, zamindar and merchant, that with a view to creating an Endowment for or towards the relief of famine-stricken people residing in any part of the Province of Bengal (including Bihar, Chota Nagpur and Orissa) upon a famine at any time or times occurring in such Province the 4 per cent Calcutta Municipal Debenture No. 167, dated the 1st December 1904, for rupees one hundred thousand of which the said Joy Gobind Law, C.I.E., is the absolute owner, may be vested in the Treasurer of Charitable Endowments for the Territories subject to the Government of Bengal upon the following terms that is to say:

Calcutta.

1. That the endowment to be thus created shall be called "Babu Joy Gobind Law's Fund for the relief of famine-stricken people in Bengal," and that its object shall be the relief as hereinafter more particularly mentioned of famine-stricken people residing in any part of the Province of Bengal, including Bihar, Chota Nagpur and Orissa.

2. That the Trustee to be appointed under section 5 (1) of the Act VI of 1890 to administer the trust shall be the Secretary to the Government of Bengal, in the Revenue Department for the time being.

3. That the Treasurer of Charitable Endowments for the Territories subject to the Government of Bengal (hereinafter referred to as the said Treasurer) shall pay the net income derived from the securities for the time being vested in the said Treasurer under this Endowment to the said Trustee as and when the same shall accrue due and the said Trustee shall appropriate and apply the same in such manner as he may consider proper to the relief of persons residing in the Province of Bengal as hereinbefore defined and in distress owing to inundation, draught or other similar causes.

4. That in applying the said net income under paragraph 3 thereof the said Trustee shall, as far as possible, apply the same towards the relief of such poor and respectable people as will not or cannot resort to Government relief works and in providing food and clothing for the aged or infirm.

5. That it shall not be obligatory upon the said Trustee to spend and apply the said net income as and when the same shall be received by him and any part of the said net income that the said Trustee may not immediately require to apply under paragraphs 3 and 4 hereof and the resulting income thereof shall be invested by the said Trustee in promissory notes, debentures, stock and other securities of the Government of India in the name of the said Trustee with liberty to the said Trustee at any time upon a famine occurring in any

part of the said Province of Bengal as hereinbefore defined to resort to the accumulations and apply the same in the manner and for the purposes in paragraphs 3 and 4 hereof mentioned.

6. That the said Trustee shall at all times conform and abide by any rules relating to the administration of endowments under the Charitable Endowments Act, 1890, which the Governor-General in Council, in exercise of the powers conferred in section 13 of the Act, may from time to time see fit to make.

7. That the said Trustee shall in books to be kept by him regularly enter or cause to be entered in full and true entries of all moneys received and paid respectively on account of the said endowment, and shall from time to time submit to such public servant as the Local Government may from time to time appoint in that behalf in such form and at such times as the said Local Government may from time to time prescribe an abstract of such accounts and such returns as to other matters relating to the management of the said fund and the administration thereof as the said Local Government may from time to time see fit to require

Notice is hereby given that an order is proposed to be made by the Government of Bengal after the expiration of one calendar month to be computed from the first publication of this notice vesting the said Municipal Debenture in the said Treasurer of Charitable Endowments for the Territories subject to the Government of Bengal upon the terms aforesaid.

Any objection to the proposed order or suggestions thereon may be transmitted in writing to the Secretary to the Government of Bengal, Revenue Department, before the 5th day of May 1905.

Dated this 3rd day of April 1905.

No. 1848Mis.—The 30th March 1905.—Mr. A. E. Hayward, District and Sessions Judge, Burdwan, is appointed to be a member of the Bengal Mining Board constituted under section 9 (1) of the Indian Mines Act, VIII of 1901, *vice* Mr. F. R. Roe, resigned.

Burdwan.

R. W. CARLYLE,
Offg. Chief Secy. to the Govt of Bengal.

DECLARATION.

No. 1844.—The 30th March 1905.—Whereas it appears to the Lieutenant-Governor of Bengal that land is required to be taken by Government at the expense of the Gobardanga Municipality for a public purpose, viz, for the site of a public latrine in Gobardanga Municipality, in the village of Gobardanga, pargana Saistanagar, zilla 24-Parganas, it is hereby declared that for the above purpose a piece of land measuring, more or less, 2 cottahs and 8 chitaks of standard measurement, bounded on the north by the police latrine and land belonging to the zamindars of Gobardanga jointly, on the east by low land belonging to the above owners, on the south by low land, the property of the above-named zamindars, and on the west by the Bathing-ghat Road, is required within the aforesaid village of Gobardanga.

24-Parganas.

This declaration is made, under the provisions of section 6 of Act I of 1894, to all whom it may concern.

A plan of the land may be inspected in the office of the Subdivisional Officer, Baraset.

R. W. CARLYLE,
Offg. Chief Secy. to the Govt. of Bengal.

DECLARATION.

No. 1845.—The 30th March 1905.—Whereas it appears to the Lieutenant-Governor of Bengal that land is required to be taken by Government at the expense of the Nadia Municipality for a public purpose, viz, for a trenching ground of that Municipality, in the village of Nabadwipa, pargana Ukhra, zilla Nadia, it is hereby declared that for the above purpose a piece of land measuring, more or less, 2 bighas 18 cottahs and 5½ chitaks of standard measurement, bounded on the north by the mango garden of Horomohan Bhattacharji and others, on the east by the Biswas Para Lane, on the west by mango garden of Sri Gopal Chatterji, and on the south by land of Chandra Bhusan Bhattacharji and others, is required within the aforesaid village of Nabadwipa.

Nadia.

This declaration is made, under the provisions of section 6 of Act I of 1894, to all whom it may concern.

A plan of the land may be inspected in the office of the Collector of Nadia.

R. W. CARLYLE,
Offg. Chief Secy. to the Govt. of Bengal.

DECLARATION.

No. 2021.—The 4th April 1905.—Whereas it appears to the Lieutenant-Governor of Bengal that land is required to be taken by Government at the expense of the East Indian Railway Company for remodelling Kalipahari Station, in the village of Moslah, pargana Shergarh, zilla Burdwan, it is hereby declared that for the above purpose two plots of land measuring, more or less, 12 bighas 8 cottahs and 6·44 chitaks of standard measurement, corresponding to 4·10 acres, bounded as follows, are required within the aforesaid village of Moslah :—

Burdwan.

Plot 1.—Bounded on the north and west by the land of the East Indian Railway, on the south by the paddy-land of Gopi Ballav Sarkar, homestead lands of Poonit Bowri, Mohori Bowri, Kumari Bowrini and Bodhu Bowri, and on the east by the *danga* land of Poonit Bowri.

Plot 2.—Bounded on the north and east by the land of the East Indian Railway, on the south by the paddy-lands of Ramu Gope, Behari Gope and Haru Kora, and on the west by the paddy-land of Haru Kora.

Mines of coal, iron-stone slate or other minerals lying under the land, except only such parts of the mines and minerals as it may be necessary to dig or carry away, or use, in the construction of the work for the purpose of which the land is being acquired, are not needed.

This declaration is made, under the provisions of section 6, Act I of 1894, and section 3, clause (1), Act XVIII of 1885, to all whom it may concern.

A plan of the land may be seen at the office of the District Engineer, East Indian Railway, Asansol.

R. W. CARLYLE,
Offg. Chief Secy. to the Govt. of Bengal.

GENERAL DEPARTMENT.

NOTIFICATION.

No. 1866.—The 4th April 1905.—The Lieutenant-Governor has been pleased, under section 17 of the Reformatory Schools Act, VIII of 1897, to appoint Mr. E. B. Havell, A.R.C.A., Principal of the Government School of Art, Calcutta, to be a Member of the Board of Management of the Alipore Reformatory School, *vice* Captain E. W. Petley, R.N., C.I.E.

24-Parganas.

H. W. O. C[illegible]NDUFF,
Offg. Secy. to the Govt. of Bengal.

MEDICAL DEPARTMENT.

No. 1665 Medl.—The 28th March 1905.—Dr. W. Forsyth, Health Officer of the Port of Calcutta, is allowed privilege leave combined with special leave for six months, viz., privilege leave for three months, under articles 260 and 301 of the Civil Service Regulations, and special leave for the remaining period under articles 301 and 316 of the Regulations, with effect from the afternoon of the 17th March 1905.

Calcutta.

2. This cancels Notification No. 1339 Medl., dated the 13th March 1905.

L. P. SHIRRES,
Secy. to the Govt of Bengal.

FINANCIAL DEPARTMENT.

NOTIFICATION.

No. 2310.—The 3rd April 1905.—The Notification No. 1078 S.R., dated the 16th February 1905, granting privilege leave for fifteen days to Mr. M. Mackertich, Assistant Factory Superintendent, Patna, is hereby cancelled.

Patna.

E. A. GAIT,
Offg. Secy. to the Govt. of Bengal.

THE following list of properties, with abstract accounts thereof, is, as prescribed in section 9 of the Charitable Endowments Act, VI of 1890, published for general information.

PART I.—*List of Properties other than Securities held under Act VI of 1890 on the 31st March 1905.*

Serial No.	Particulars of vesting order.		Name of endowment.	Administrators of property.	Property held.			Remarks.
	No.	Date.			Description.	Value.	Actual income, if known.	
1	2	3	4	5	6	7	8	9
1	Government of Bengal Notification No. 3926-Med.	13th December 1893.	(a) Elliott Charitable Dispensary at Soro in Balasore. (b) Albert Victor Charitable Dispensary at Jellasore in Balasore. (c) Rani Srimati Charitable Female Dispensary attached to the Raja Shyama Nunda De Dispensary in the town of Balasore. (d) The said Raja Shyama Nunda De Dispensary	Committee of three persons, having for its President the District Magistrate of Balasore.	All that undivided moiety or half share of and in all that permanently-settled mahal, called or known as Khasuraban, as specified in the schedule at page 213 of the *Calcutta Gazette*, Part IB, dated 13th December 1893.	Rs. A. P. 26,000 0 0	Rs. 1,535	
2	Ditto No. 2630-Med.	26th August 1901.	Syedani Tahirunissa Bibi Chowdhurani Female Hospital at Bogra, and the Bogra Public Library	Collector of Bogra ...	Shares in landed properties enumerated in the schedule at page 17 of the *Calcutta Gazette*, Part IB, dated the 24th January 1894.	.....(a)	1,140	(a) Not known.
3	Ditto No. 3112-Med.	31st July 1895	Howrah General Hospital ...	Civil Surgeon of Howrah as Superintendent, under the supervision, management, and control of a Committee of twenty persons.	The lands, heriditaments, buildings, and premises, forming and known as the Howrah General Hospital, as specified in the first schedule of the vesting order published at pages 762 and 763 of Part I of the *Calcutta Gazette*, dated the 7th August 1895.	1,39,230 2 6	Nil.	
4	Ditto No. 2609-Med.	10th May 1898	Lady Mackenzie Sitabganj Charitable Dispensary.	Committee of three persons, having for its President the District Magistrate of Dinajpur.	Zamindari right to the Hát Sitabganj, also called Hát Budheshury, situated within Lat Behogaon, tauzi No. 109 in the Dinajpur Collectorate, as specified at page 507 of the *Calcutta Gazette*, Part I, dated the 18th May 1898.	11,240 0 0	624	
5	Ditto No. 5220-Med.	5th December 1899.	Rao Jogendra Narayan Rai's Mackenzie Tank, Park, and Hall Fund.	Committee of eight members with the Subdivisional Officer of Jangipur as President.	The messuage, premises, and tank situate at Raghunathgunge, in the subdivision of Jangipur, in the district of Murshidabad, with the piece or parcel of land on part whereof the same is erected and built and the said tank is dug, containing an area of 2J bighas.	10,625 0 0	Nil.	
6	Ditto No. 184-T.M.	26th April 1902.	Prince Albert Victor Asylum for Lepers.	Commissioner of Police, Calcutta, *ex-officio* Chairman of the Board of Management.	All that piece or parcel of land with the tanks and buildings thereon situate at and numbered 18, 19, 20, 21 Gobra Road, south, in the town of Calcutta, and Railway B class land, containing an area of 2B bighas 5 cottahs 13 chitaks 31 square feet, detailed in the vesting order.	1,34,097 0 0	Nil.	

7	Ditto No. 2456 and 2834	16th July 1901, 22nd December 1902.	The Ram Narayan Basu English School Fund.	Trustees of the Fund, consisting of eight persons.	(1) All that piece or parcel of land with one-storied brick-built building in the village of Maju, zilla Hooghly, containing an area of 4 bighas and 10 cottahs. (2) All that piece or parcel of land in the village of Maju, containing an area of 15 cottahs. (3) All that piece or parcel of land situate in Shamgunge in Sonthal Parganas, containing an area of (14 cottahs local measurement) 2 bighas 9 cottahs, detailed in the vesting order. (4) All that piece or parcel of land in the Sonthal Parganas subdistrict and thana Deoghur, containing an area of 1 bigha 15 cottahs, detailed in the vesting order.	10,000 0 0 40 0 0 10,000 0 0	15 2 600 to 800
8	Ditto No. 3620	2nd December 1903.	The Kasha Kishore Technical School Fund.	Chairman, District Board, Mymensingh.	All that piece or parcel of land situate at Mymensingh, containing an area of 6 bighas 6 cottahs and 3½ chitaks, detailed in the vesting order.	3,559 8 5	102 9 7
9	Ditto No. 1343-M.	18th March 1903.	Mackenzie Public Hall ...	Magistrate of Murshidabad.	All the one storied messuage and building situate at Azimganj in Lalbagh, Murshidabad, with the outbuildings and appurtenances thereto belonging and the piece or parcel of land on part whereof the same is erected or built measuring 12 cottahs and 5 chitaks, the ground rent payable wherefor amounts to Rs. 25-15-3 detailed in the vesting order.	.... ..	Nil.
10	Ditto No. 2902-Med.	6th August 1903.	Raj Kumar Leper Asylum Fund ...	Trustees of the Fund consisting of 18 members.	All those buildings standing and being on that piece or parcel of land situate in village Jhasagari, mauza Thaii in Sonthal Parganas.	.....	.....
11	Ditto No. 2270-T M.	5th October 1904	Samanta Radha Raman Das Endowment. Srimati Hira Dai Endowment. Samanta Radha Shyam Das Endowment.	Collector of Midnapore	Eight-anna share, formerly of taluk Barbaria, now the entirety of taluk Rajnarayan Das bearing tauzi No. 2005, pargana Kasijora in Midnapore. Eight-anna share, formerly of taluk Amnan, now the entirety of taluk Rajnarayan Das bearing tauzi No. 2007, pargana Kasijora in Midnapore detailed in the vesting order.	30,000 0 0	1,313 4 4

CALCUTTA,
The 1st April 1905

J. C. E. BRANSON,
Treasurer, Charitable Endowments, Bengal.

PART II.—*List and Abstract Account of Securities*

Case No.	Names of endowments.	Person on whose behalf held.	Particulars of Securities.			Cash Receipts.			
			Government Promissory Notes.	Other kinds.	Total.	Interest or dividend realised.	Other cash receipts.		
							Balance of previous year.	Balance left after investment.	Subscriptions.
1	2	3	4	5	6	7	8	9	10
			Rs.	Rs.	Rs.	Rs. A. P.	Rs. A. P.	Rs. A. P.	Rs. A. P.
1	Maharajmatah Sibu Soondari Dabee's Hindu Widows' Fund.	Maharaj Kumar Prodyat Coomar Tagore, Secretary to the Trustees.	1,00,000	...	1,00,000	3,500 0 0	.....	.....	.....
2	Elliott Prize for Scientific Research.	Trustees appointed under Bengal Government Notification No. 5058F., dated 21st December 1892.	5,000	...	5,000	175 0 0	1,395 8 0	19 6 8	.....
3	The Sreemutty Brohmomoyi's Hindu Orphans' Fund.	Maharaj Kumar Prodyat Coomar Tagore, Honorary Secretary to the Trustees.	25,000	...	25,000	875 0 0	.....	.....	.....
4	The Albert Victor Asylum for Lepers Maintenance Fund.	Commissioner of Police, Calcutta. *Ex-officio* Chairman of the Board of Management.	20,500	...	20,500	717 8 0	.....	.....	.....
5	The Hira Lal Mukerji's Tol Fund.	Principal, Sanskrit College.	12,400	...	12,400	422 0 0	.....	.....	.....
6	The Syed Mahomed Mehdi Hossein Fund.	Commissioner, Collector, Civil Surgeon, Patna.	.....	9,500	9,500	475 0 0	.....	.....	.....
7	The Sibani Fund ...	A Committee consisting of not less than 5 and not more than 7 members.	6,000	...	6,000	210 0 0	.....	.....	.....
8	The Iswar Chandra Charitable Dispensary at Amragori, Howrah	Ditto ...	12,000	...	12,000	386 8 0	.....	.....	.....
9	Walter Thompson Female Scholarship Fund.	Superintendent, Campbell Medical School.	9,500	...	9,500	323 12 0	515 9 9	.....	.....
10	The Belgoria Charitable Dispensary.	Magistrate of Nadia ...	26,000	...	26,000	910 0 0	.....	.....	.....
11	Babu Ram Lal Mukerji's Fund.	Secretary, Government of Bengal, Revenue Department.	50,000	...	50,000	1,750 0 0	.....	.....	.....
12	Dr Bholanath Bose's Trust Estate.	Chairman, District Board, 24-Parganas.	1,49,700	...	1,49,700	5,214 8 0	.....	.....	.....
13	Kamini Moyee Dasi Ward Endowment.	Secretary to the Committee for the Management of the North Suburban Hospital, Cossipore.	9,500	...	9,500	332 8 0	.....	.....	.....
14	The Hara Kumar Tagore Tol Stipend Fund.	Principal, Sanskrit College.	15,000	...	15,000	525 0 0	.....	.....	.....
15	DeSouza Charitable Fund.	District Charitable Society.	2,47,300	...	2,47,300	8,655 8 0	.....	.....	.....
16	Barton Fund ...	Magistrate, Jessore ...	4,600	...	4,600	161 0 0	.....	.....	.....
17	The Mainaguri Charitable Dispensary Fund	Deputy Commissioner, Jalpaiguri.	3,000	...	3,000	105 0 0	.....	.....	.....
18	Rao Mohesh Narayana Roy Serai Fund.	A Committee of seven members with the Subdivisional Officer, Jangipur, Murshidabad, as President.	3,000	...	3,000	105 0 0	.....	.....	.....
		Carried over ...	6,98,800	9,500	7,08,000	24,843 4 0	1,911 1 9	19 6 8	.....

held under Act VI of 1890 on the 31st March 1905.

Total cash receipts.	Cash Expenditure				Balance in cash.	Remarks.
	Fees paid to the Government.	Other payments.		Total paid.		
		Remitted to Comptroller-General for investment.	Payments to the administrators.			
11	12	13	14	15	16	17
Rs. A. P.	Rs. A. P.	Rs. A. P.	Rs. A. P.	Rs. A. P.	Rs. A. P.	
3,500 0 0	8 12 0	.....	3,491 4 0	3,500 0 0	Nil	
1,589 14 8	0 7 0	1,010 0 0	.....	1,010 7 0	579 7 8	
875 0 0	2 3 0	.....	872 13 0	875 0 0	Nil	
717 8 0	1 12 8	.....	715 11 4	717 8 0	Nil	
422 0 0	1 1 0	.....	420 15 0	422 0 0	Nil	
475 0 0	1 3 0	.....	473 13 0	475 0 0	Nil	
210 0 0	0 8 4	.....	209 7 8	210 0 0	Nil	
386 8 0	0 15 6	.....	385 8 6	386 8 0	Nil	
839 6 9	0 13 0	501 9 2	179 7 0	681 13 2	157 8 7	
910 0 0	2 4 4	.....	907 11 8	910 0 0	Nil	
1,750 0 0	4 6 0	.....	1,745 10 0	1,750 0 0	Nil	
5,214 8 0	13 0 6	.....	5,201 7 6	5,214 8 0	Nil	
332 8 0	0 13 4	.....	331 10 8	332 8 0	Nil	
525 0 0	1 5 0	.....	523 11 0	525 0 0	Nil	
8,656 8 0	21 10 2	.....	8,633 13 10	8,656 8 0	Nil	
161 0 0	0 6 6	.....	160 9 6	161 0 0	Nil	
105 0 0	0 4 2	.....	104 11 10	105 0 0	Nil	
105 0 0	0 4 2	.....	104 11 10	105 0 0	Nil	
26,773 12 5	462 1 8	1,511 9 2	24,463 1 4	26,036 12 2	737 0 3	

PART II.—*List and Abstract Account of Securities*

Case No.	Names of endowments	Person on whose behalf held.	Particulars of Securities.			Cash Receipts.			
			Government Promissory Notes.	Other kinds.	Total.	Interest or dividend realised.	Other cash receipts.		
							Balance of previous year.	Balance left after investment.	Subscriptions.
1	2	3	4	5	6	7	8	9	10
		Brought forward ...	Rs. 6,98,500	Rs 9,500	Rs. 7,08,000	Rs. A. P. 24,813 4 0	Rs. A. P. 1,911 1 9	Rs. A. P. 19 6 8	Rs. A. P. .....
19	Krishna Chandra Sarkar Scholarship Fund.	Collector, Rajshahi ...	11,800	...	11,800	413 0 0	445 2 9	.....	.....
20	Krishna Kamini Chowdhurani Scholarship and Medal Fund.	Magistrate, Pabna ...	6,000	...	6,000	205 0 0	.....	.....	.....
21	The Mohini Mohun Roy Permanent Charitable Relief Fund.	Collector, 24-Parganas ...	1,00,000	...	1,00,000	3,000 0 0	.....	.....	.....
22	The Beni Madhav Fund	Magistrate, Birbhum ...	4,000	...	4,000	140 0 0	.....	.....	.....
23	Dr Chandra's Scholarship Fund.	Principal, Medical College, Calcutta.	21,000	...	21,000	735 0 0	.....	.....	.....
24	Rao Jogendra Narayan Rai's Mackenzie Tank, Park, and Hall Fund.	A Committee of eight members with the Subdivisional Officer of Jangipur as President	3,000	...	3,000	105 0 0	.....	.....	.....
25	Hari Charan Fund ...	Magistrate, Khulna ...	5,100	...	5,100	178 8 0	.....	.....	.....
26	Indian People's Famine Trust.	Board of Management ...	24,10,000	...	24,10,000	84,350 0 0	.....	.....	.....
27	Inglis Badshah Nawab Scholarship Fund.	Principal, Patna College	2,000	...	2,000	60 0 0	.....	.....	.....
28	Badshah Nawab Woodburn Medal Fund.	Ditto ...	500	...	500	15 0 0	.....	.....	.....
29	Badshah Nawab Bourdillon Scholarship Fund.	Ditto ...	2,000	...	2,000	60 0 0	.....	.....	.....
30	The Ram Narayan Basu English School Fund.	Trustees of the Fund ...	3,000	...	3,000	105 0 0	.....	.....	.....
31	Badshah Nawab Nawab Lootf Ali Khan Medal Fund.	Principal, Patna College	500	...	500	15 0 0	.....	.....	.....
32	Badshah Nawab Hare Medal Fund.	Ditto ...	500	...	500	15 0 0	.....	.....	.....
33	Badshah Nawab Le-Mesurier Medal Fund.	Ditto ...	500	...	500	15 0 0	.....	.....	.....
34	Kaw Kishore Technical School Fund.	Chairman, District Board, Mymensingh.	15,000	...	15,000	525 0 0	.....	.....	.....
35	Raja Jogendra Narain Roy, Water-Supply Fund.	Board of Trustees, with the Magistrate of Murshidabad as President.	1,00,000	...	1,00,000	3,500 0 0	.....	.....	.....
36	Raj Kumari Leper Asylum Fund.	18 Trustees with the Deputy Commissioner Santhal Parganas as President.	25,000	1,000	26,000	871 4 0	.....	.....	.....
37	Raja Mahendra Lall Khan's (of Narajole) Zenana Hospital.	Managing Committee of the Pearce Hospital, Midnapur	33,000	...	33,000	.....	.....	.....	.....
		Total ...	34,43,400	10,500	34,53,900	1,19,151 0 0	2,356 4 6	19 6 8	.....

CALCUTTA,

The 1st April 1905

Held under Act VI of 1890 on the 31st March 1905—concluded.

CASH EXPENDITURE.						
Total cash receipts.	Fees paid to the Government.	Other payments.		Total paid.	Balance in cash.	REMARKS.
		Remitted to Comptroller-General for investment.	Payments to the administrators.			
11	12	13	14	15	16	17
Rs. A. P.	Rs. A. P.	Rs. A. P.	Rs. A. P.	Rs. A. P.	Rs. A. P.	
26,773 12 5	62 1 8	1,511 9 2	24,463 1 4	26,036 12 2	737 0 3	
858 2 9	1 0 6	.....	558 0 0	559 0 6	299 2 3	
205 0 0	0 8 2	.....	204 7 10	205 0 0	Nil	
3,000 0 0	7 8 0	.....	2,992 8 0	3,000 0 0	Nil	
140 0 0	0 5 8	.....	139 10 4	140 0 0	Nil	
735 0 0	1 13 6	.....	733 2 6	735 0 0	Nil	
105 0 0	0 4 2	.....	104 11 10	105 0 0	Nil	
178 8 0	0 7 2	.....	178 0 10	178 8 0	Nil	
84,350 0 0	.....	.....	84,350 0 0	84,350 0 0	Nil	
60 0 0	0 2 6	.....	59 13 6	60 0 0	Nil	
15 0 0	0 0 6	.....	14 15 6	15 0 0	Nil	
60 0 0	0 2 6	.....	59 13 6	60 0 0	Nil	
105 0 0	0 4 2	.....	104 11 10	105 0 0	Nil	
15 0 0	0 0 6	.....	14 15 6	15 0 0	Nil	
15 0 0	0 0 6	.....	14 15 6	15 0 0	Nil	
15 0 0	0 0 6	.....	14 15 6	15 0 0	Nil	
525 0 0	1 5 0	.....	523 11 0	525 0 0	Nil	
3,500 0 0	8 12 0	.....	3,491 4 0	3,500 0 0	Nil	
871 4 0	2 3 0	.....	869 1 0	871 4 0	Nil	
.....	.....	.....	.....	.....	Nil	
21,526 11 2	57 0 0	1,511 9 2	1,18,691 15 6	1,20,490 8 8	1,036 2 6	

J. C. E. BRANSON,
Treasurer, Charitable Endowments, Bengal.

JUDICIAL DEPARTMENT.

No. 2646A.

APPOINTMENTS AND TRANSFERS.

No. 2470A.—The 30th March 1905.—Babu Syama Kanta Nag, Munsif of Faridpur, is appointed to act as Subordinate Judge of Faridpur, during the absence, on leave, of Babu Pran Krishna Biswas, or until further orders, and is vested with the powers of a Judge of a Court of Small Causes for the trial of suits cognisable by such a Court up to the value of Rs. 500, within the local limits of the Sadar Munsifi of Faridpur. He is also vested with the powers conferred on District Judges by sections 344 to 359 (both inclusive) of the Code of Civil Procedure in cases arising within the local limits of the district of Faridpur.

Faridpur.

No. 2472A.—The 30th March 1905.—Babu Ram Siromani Roy Sen, B.L., is appointed to act as a Munsif in the district of Faridpur, to be ordinarily stationed at the Sadar station, during the absence, on deputation, of Babu Syama Kanta Nag, or until further orders.

Faridpur.

No. 2501A.—The 31st March 1905.—Maulvi Ali Ahmad, Munsif of Chapra, in the district of Saran, is appointed to act, until further orders, as Subordinate Judge of the same district, *vice* Babu Kedaresvar Maitra, deceased.

Saran.

No. 2503A.—The 31st March 1905.—Babu Bakulal Biswas, B.L., is appointed to act as a Munsif in the district of Saran, to be ordinarily stationed at Chapra, during the absence, on deputation, of Maulvi Ali Ahmad, or until further orders.

Saran.

No. 2575A.—The 4th April 1905.—Babu Rasik Mohan Bhatacharjee, M.A., B.L., is appointed to act as a Munsif in the district of Cuttack, to be ordinarily stationed at Kendrapara, during the absence, on leave, of Babu Upendra Nath Datta, or until further orders.

Cuttack.

No. 2601A.—The 4th April 1905.—Babu Manmatha Chandra Bose, B.L., is appointed to act as an Additional Munsif in the district of Nadia, to be ordinarily stationed at Kushtia and Ranaghat, but to be on deputation to Chuadanga, during the absence, on leave, of Babu Hem Chandra Bose, or until further orders.

Nadia.

LEAVE.

No. 2616A.—The 29th March 1905.—Babu Rajendra Nath Roy, Munsif of Midnapore, is allowed leave for fifteen days, under article 272 of the Civil Service Regulations, with effect from the 6th March 1905.

Midnapore.

The 29th March 1905.—Babu Tarak Nath Datta, Munsif of Netrakona, in the district of Mymensingh, is allowed leave for twenty days, under article 271 of the Civil Service Regulations, in extension of the leave granted to him under the order of the 6th February 1905.

Mymensingh.

No. 2617A.—The 31st March 1905.—Babu Hem Chandra Bose, Additional Munsif of Kushtia and Ranaghat, now on deputation to Chuadanga, in the district of Nadia, is allowed leave for forty-five days, under article 271 of the Civil Service Regulations, with effect from the 5th April 1905, or from the date on which he may be relieved.

Nadia.

POWERS.

No. 2475A.—The 30th March 1905.—Babu Gopal Bullub Das, Deputy Magistrate, who has, under the order of this date, been posted to the head-quarters station of the Gaya district, is vested with the powers of a Magistrate of the first class.

Gaya.

No. 2508A.—The 31st March 1905.—Under the authority vested in him by section 357, sub-section (2), of the Code of Criminal Procedure, Act V of 1898, the Lieutenant-Governor empowers Maulvi Mohammad Fazlul Karim, substantive *pro tempore* Deputy Magistrate, Dacca, to take down evidence in criminal cases in the English language.

Dacca.

No. 2513A.—The 31st March 1905.—Babu Sasibhusan Satpathi, who has, under the order of this date, been appointed substantively *pro tempore* to the eighth grade of Deputy Magistrates and posted to the head-quarters station of the Cuttack district, is vested with the powers of a Magistrate of the third class.

Cuttack.

No 2525A.—The 31st March 1905.—Under the authority vested in him by section 357, sub-section (2), of the Code of Criminal Procedure, Act V of 1898, the Lieutenant Governor empowers Babu Hari Charan Bose, substantive *pro tempore* Deputy Magistrate, Alipore, to take down evidence in criminal cases in the English language.

24-Parganas.

No. 2553A.—The 1st April 1905.—Babu Brij Bansi Sahai, Deputy Magistrate, who has under the order of this date, been appointed to have charge of the Madhipura subdivision of the Bhagalpur district, is vested with the powers of a Magistrate of the first class.

Bhagalpur.

No. 2560A.—The 3rd April 1905.—Babu Bhuban Mohan Gangooly, Officiating Subordinate Judge, Backergunge, is vested with the functions of a District Court, under section 26, sub-section (*l*), of Act VII of 1889, within the local limits of the Sadar Munsifi of Barisal. He is also appointed to perform the functions of a Court under section 3, clause (*d*), of the Land Acquisition Act, I of 1894, within the local limits of the original jurisdiction of the District Judge of Backergunge.

Backergunge.

No. 2595A.—The 4th April 1905.—Mr. L. C. Adami, Officiating Joint-Magistrate, who has, under the order of this date, been posted to the head-quarters station of the Darjeeling district, is vested with the powers of a Magistrate of the first class and with powers under sections 110, 133 and 144 of the Code of Criminal Procedure. He is also vested with the power to try summarily the offences mentioned in section 260 of that Code.

Darjeeling.

No. 2614A.—The 4th April 1905.—Mr. R. E. Jack, Assistant Magistrate, Nawadah, Gaya, is vested with the powers of a Magistrate of the first class.

Gaya.

No. 2642A.—The 4th April 1905.—The Munsif of Gumla, in Chota Nagpur, is vested, *ex-officio*, with the powers of a Magistrate of the second class.

Chota Nagpur.

R. W. CARLYLE,
Offg. Chief Secy. to the Govt. of Bengal.

APPOINTMENTS AND TRANSFERS.

No. 2879J.—The 31st March 1905.—Babu Raj Narayan Mukerjee is re-appointed to be an Honorary Magistrate of the Serampore Independent Bench, in the district of Hooghly.

Hooghly.

No. 2899J.—The 31st March 1905.—Babu Hem Chandra Ghosh is re-appointed to be an Honorary Magistrate of the Regular Bench at Ulubaria, in the district of Howrah.

Howrah.

No. 3014J.—The 3rd April 1905.—Babu Banka Behari Mitter and Babu Tarak Das Banerjee are re-appointed to be Honorary Magistrates of the Baduria Municipal Bench, in the district of the 24-Parganas.

24-Parganas.

RESIGNATIONS.

No. 2849J.—The 30th March 1905.—The Lieutenant-Governor accepts the resignation tendered by Mr. Franz Herman Lindberg of his appointment as an Honorary Magistrate of the Budge-Budge Independent Bench, in the district of the 24-Parganas.

24-Parganas.

No. 2962J.—The 4th April 1905.—The Lieutenant-Governor accepts the resignation tendered by Tikait Todal Narain Singh of his appointment as an Honorary Magistrate of the Giridih Regular Bench, in the district of Hazaribagh.

Hazaribagh.

No. 3017J.—The 3rd April 1905.—The Lieutenant-Governor accepts the resignation tendered by Mr. John C. Mitchell of his appointment as an Honorary Magistrate of the Jamalpur Independent Bench, in the district of Monghyr.

Monghyr.

POWERS.

No. 2880J.—The 31st March 1905.—Babu Raj Narayan Mukerjee, who is re-appointed to be an Honorary Magistrate of the Independent Bench at Serampore, in the district of Hooghly, is vested with the powers of a Magistrate of the second class, and is authorised to sit singly for the trial of such cases as may be made over to him by the Subdivisional Officer of Serampore.

He is also empowered, under section 357, sub-section (2), of the Code of Criminal Procedure, Act V of 1898, to take down evidence in criminal cases in the English language.

Hooghly.

No. 2900J.—The 31st March 1905.—Babu Hem Chandra Ghosh, who has been re-appointed to be an Honorary Magistrate of the Regular Bench at Ulubaria, in the district of Howrah, is vested with the powers of a Magistrate of the third class.

Howrah.

No. 3015J.—The 3rd April 1905.—Babu Banka Behari Mitter and Babu Tarak Das Banerjee, who have been re-appointed to be Honorary Magistrates of the Baduria Municipal Bench, in the district of the 24-Parganas, are vested with the powers of a Magistrate of the third class. Babu Banka Behari Mitter is also empowered, under section 357, sub-section (2), of the Code of Criminal Procedure, Act V of 1898, to take down evidence in criminal cases in the English language.

24-Parganas.

H. W. C. CARNDUFF,
Offg. Secy. to the Govt. of Bengal.

NOTIFICATION.

No. 2871J.—The 31st March 1905.—In exercise of the power conferred by section 34 of Act V of 1861 (the Police Act, 1861), the Lieutenant-Governor is pleased to extend that section to the town of Bhanga, in the district of Faridpur, within the boundaries specified below :—

Faridpur.

North.—The lands of Goomain Shaik, Durga Charan Kapali, Ram Chandra Dhupi, Uma Charan Dey Bal, Kajeme Chaprassi and Kedar Kapali.

East.—The homestead and lands of Kootee Peshakar and Soudamini Peshakar, Halat, boat-ghat, lodging of Babu Bepin Behari Bhattacharjee, and the homesteads of Ananda Reeshi and Prasanna Kumar De.

South.—The lands of Naimaddi Shaik and *bashabari* of Babu Rajendra Nath Rai Chaudhuri of 22 *rashee* with a ditch.

West.—The rivers Coomar and Sheetalakhya, Halat, west of Kootibari, lands of Shonaulla Chaprassi, Mossen Shaik, Mofizuddi Shaik, Kailash Chandra Sen and Hancha Shaik, and the tank of Sadan Shaik.

H. W. C. CARNDUFF,
Offg. Secy. to the Govt. of Bengal.

JUDICIAL DEPARTMENT—(JAILS).

No. 2957J.—The 4th April 1905.—Mr. J. S. Middleton is appointed to be a non-official visitor of the Alipore Central Jail.

24-Parganas.

H. W. C. CARNDUFF,
Offg. Secy. to the Govt. of Bengal.

POLICE DEPARTMENT.

NOTIFICATIONS.

No. 2904J., dated the 1st April 1905.—In exercise of the power vested in him by section 14, sub-section (1) of the Criminal Procedure Code, 1898, the Lieutenant-Governor is pleased to confer upon each of the under-mentioned presidents of panchayats in thana Soro, district Balasore, the powers of a Magistrate under sections 64, 127 and 128 of the said Code, and to declare that the said powers may be exercised by the said officers within the limits of the Unions noted against their respective names.

Balasore.

2. The Lieutenant-Governor is further pleased to declare, in pursuance of sub-section (2) of the said section 14, that the said powers are conferred and may be exercised by each of the said officers for a period of three years only from the date of this Notification—

Name of President.	Name of Union.
Soro thana.	
Bhuyan Balabhadra Prosad Das Mohapatra ...	Mangalpur.
Lakhmikanta Das Mohapatra	Korai.
Gobinda Prosad Ghosh	Sarsankh.
Purusottom Missra	Chhatragari.
Mohendra Lal Das Mohapatra	Talnagore.
Chowdhury Balkristo Nanda	Tundpura.
Lalmohan Sahu	Jamjhari.
Sristidhar Ray	Kedarpur.
Nilambar Kanango	Khantapara.
Harihar Prosad Mohapatra	Taharpur.
Balabhadra Sahu	Pathuripenth.
Anantapur outpost.	
Brindaban Missra	Nuapur.
Hari Prosad Panda	Kurura.
Gadadhar Panda	Samsarpur.
Jagannath Prosad Das	Guda.
Khaira outpost.	
Jagabandhu Sendha	Kupari.
Padmacharan Dakhin Ray	Ratina.
Prohlad Charan Das	Guliha.
Badyanath Rath	Sarugan.
Pranbhandhu Das	Gandiberh.
Chintamoni Panigrahi	Turigaria.

Simulia outpost.

Name of President.	Name and number of Union.
Lakhmoni Kanta Misra	Balikhand.
Pandab Behera	Bari.
Panu Charan Mahanty	Markona.
Ram Chandra Mohapatra	Chandrapara.
Radhashyam Das	Jalang.
Chaudhuri Sadasib Panigrahi	Garsankh.

Dacca.

No. 2990J.—The 1st April 1905.—In exercise of the power vested in him by section 14, sub-section (1) of the Code of Criminal Procedure, 1898, the Lieutenant-Governor is pleased to confer upon each of the undermentioned Presidents of panchayats in the district of Dacca, the powers of a Magistrate under sections 64, 127 and 128 of the same Code, and to declare that the said powers may be exercised by the said officers within the limits of the Unions noted against their respective names.

2. The Lieutenant-Governor is further pleased to declare, in pursuance of sub-section (2) of the said section 14, that the said powers are conferred and may be exercised by each of the said officers for a period of three years only from the date of this notification.

Keraniganj Police Station.

Name of President.	Name of Union.
Hafez Mohammad Hossain	Keranĭganj.
Babu Ram Durlav Dhar	Rohitpur.
„ Gobinda Chandra Dutta ...	Barisur.
Munshi Mobarak Khan	Nazirpur.
Babu Krishna Gobinda Majumdar ...	Konda.
„ Kali Kumar Sarcar	Kanar Char.
„ Mohesh Chandra Mitra ...	Talepur.
„ Lakhi Narayan Ghosh ...	Arakul.
„ Parboty Nath Das	Subhadya.
Rai Sahib Durga Kumar Bose ...	Teghoria.
Babu Govinda Kishore Rakhit	Bamansur.
„ Kali Kishore Bhowmik	Boail.
„ Shadhu Charan Pal	Shyampur.
„ Baroda Kanta Dhar	Dogair.
„ Jageswar Kar	Demra.
„ Har Chandra Guha	Beraid
„ Nirod Chandra Ganguli	Joydebpur.
Minoddi Mundle	Mirzapur.
Munshi Samiruddin Ahmad	Kaultia.
Babu Debendra Nath Neogi	Basan.
„ Ardhendu Nath Roy Choudhury ...	Gacha.
„ Digendra Narayan Ghosh ...	Dattapara.
„ Madhab Chandra Basu	Pubail.

Narainganj Police Station.

Babu Prio Nath Guha	Kashipur.
„ Pyari Mohan Saha	Baktabali.
Munshi Sadaruddin Dewan	Gog Char.
Babu Fanindra Narayan Roy Choudhury ...	Bandar.
„ Swarup Chandra Roy	Kachpur.
„ Haribar Choudhury	Shidhirganj.
„ Rohini Kumar Banerjee ...	Brahmangaon.
„ Hari Mohan Chakraborty ...	Jampur.
„ Bharat Chandra Dutta	Manahardi.

Munshiganj Police Station.

Janu Sarcar	Tarky.
Najimuddi Sarcar	Shiloi (outpost Rajabari).
Warish Sarcar	Adhara Union.
Babu Mohini Mohan Roy	Tongibari.
„ Sailendra Chandra Bandopadhya ...	Katadia.
„ Srinath Sen	Kamarkhara.
„ Kali Kumar Bandopadhya ...	Baharok (outpost Rajabari).
„ Nishi Kanta Chakraborty ...	Rajabari.
Maulvi Abdunnur Choudhury ...	Banori.
Babu Mohim Chandra Basu Roy ...	Bahar.
„ Kaminí Ranjan Das	Kalma.
„ Durga Charan Bandopadhya ...	Kalikal.
„ Chandra Kanta Sarcar	Hasail.
„ Rajani Kanta Sen	Shonarang.
Munshi Khabirulla	Munshirhat.
Babu Kashi Chandra Majumdar ...	Abdullapur.
„ Raj Kumar Nag	Munshiganj.

Munshiganj Police Station—concluded.

Name of President.	Name of Union.
Syed Alla Hafez	... Gajaria.
Babu Satyendra Nath Chatterji	... Rikabi Bazar.
„ Shoshi Bhusan Mukherjee	... Rampal.
„ Shama Charan Guha ...	... Outshahi.
„ Chandra Kumar Mukherjee	.. Mirkadim.
„ Hari Prasanna Goswami	... Kewar.
„ Durga Charan Ghosh ...	... Joshlang, *alias* Doshlang.
„ Rajendra Chandra De Tapedar	... Hat Baligaon.
„ Prosanna Kumar Mukherjee	... Betka.
„ Basanta Kumar Guha ...	... Bajrajogini.
„ Kalikanta Banerjee ...	... Airal.
„ Raj Kumar Sen Gupta ...	... Pachgaon.
„ Krishna Sundar Aich Bhowmik	... Balasia.
Munshi Hassan Ali Dewan ...	... Raj Rajeswar.
„ Asrafali	... Bausia.
Babu Jagat Chandra Mullik ..	... Hosendi.
Mahamed Golam Hossain Khan	... Imampura.
Babu Kista Kumar Das Gupta	... Baluakandi.
Munshi Akram Mia ...	... Bholur Char.
Maulvi Nazamuddi ...	... Guagachia.

Manickganj Police Station.

Babu Haris Chandra Das Gupta	... Dasara.
„ Jadava Nanda Gupta ..	... Matta.
Kazi Mohamed Arfin ...	... Dighi.
Babu Sri Mahan Sen Munshi ...	... Betila.
„ Prosanna Kumar Bose ...	... Palara.
„ Hem Chandra Roy Chowdhury	... Dhankora.
„ Sashi Mohan Sarkar ...	... Meghsimail.
„ Peary Mohan Ghosh ...	... Panjankhara.
„ Gopal Krishna Basu ...	... Rajnagar.
„ Nabadip Chandra Saha ...	... Chandi.
„ Kamini Kumar Sarkar ...	... Katigram.

No. 3024J.—The 1st April 1905.—In exercise of the power vested in him by section 14, sub-section (1) of the Code of Criminal Procedure, 1898, the Lieutenant-Governor is pleased to confer upon each of the undermentioned Presidents of Panchayats in the district of Hooghly, the powers of a Magistrate under sections 64, 127 and 128 of the same Code, and to declare that the said powers may be exercised by the said officers within the limits of the Unions noted against their respective names

Hooghly.

2. The Lieutenant-Governor is further pleased to declare, in pursuance of sub-section (2) of the said section 14, that the said powers are conferred and may be exercised by each of the said officers for a period of three years only from the date of this notification.

Polba Thana.

Name of President.	Name of Union.
Babu Rajendra Nath Chakravarti	Harit.
„ Bhagabati Charan Kundu	Polba.
„ Krishna Lal Mukerjee	Goswami Malipara.
„ Hari Das Ghose	Rajhat.
Lala Bidhu Bhusan Babu	Putna, Mohanad.
Babu Hari Pado Mukerjee	Sudarsan.
„ Dina Nath Roy	Sugandha.
„ Rono Bijoy Soor	Amnan.
„ Kunjo Behari Ghosh	Akna.

No. 3030J.—The 1st April 1905.—In exercise of the power vested in him by section 14, sub-section (1) of the Code of Criminal Procedure, 1898, the Lieutenant-Governor is pleased to confer upon each of the undermentioned Presidents of panchayats in the district of Tippera, the powers of a Magistrate under sections 64, 127 and 128 of the same Code, and to declare that the said powers may be exercised by the said officers within the limits of the Unions noted against their respective names.

Tippera.

2. The Lieutenant-Governor is further pleased to declare, in pursuance of sub-section (2) of the said section 14, that the said powers are conferred and may be exercised by each of the said officers for a period of three years only from the date of this Notification.

Thana Muradnagar.

Name of President.	Name and number of Union.
Babu Ramananda Ray ...	... Abdulapur, I.
„ Kasi Chandra Bhadra ...	... Akubpur, II.
Syed Bazlar Rahman ...	... Andikot, III.
Babu Hari Mohan Poddar ...	... Bakharnagar, IV.
Munshi Aminuddin Bhuiah ...	... Baptiara, V.
„ Abdur Rahman ...	... Barasalghar, VI.
Babu Sarat Chandra Chakravarti ...	... Barkamta, VII.
„ Purna Chandra Chakravarti ...	... Bhani, VIII.
Munshi Abdul Ghani Bhuiah ...	... Char Bakhar, IX.
Babu Upendra Lochan Mazumdar ...	... Dakhin Bangara, X.
„ Hala Dhar Das ...	... Darora, XI.
„ Mahendra Chandra Ray ...	... Dhamti, XII.
„ Sasi Mohan Dev ...	... Egaragram, XIII.
„ Mahim Chandra Chaudhuri ...	.. Elahabad, XIV.
„ Ganga Charan Saha ...	... Jafarganj, XV.
„ Girish Chandra Ray ...	... Jahapur, XVI.
„ Kanai Lal Das	... Janghar, XVII.
„ Nabin Chandra Ray ...	... Jatrapur, XVIII.
„ Gada Dhar Saha ...	... Mostafapur, XIX.
Maulvi Rakibuddin Ahmed ...	... Muradnagar, XX.
Munshi Gholam Hossein Doctor ...	... Panchpukharia, XXI.
Babu Mahendra Chandra Das ...	... Purbadhair, XXII.
Munshi Mahammad Faez ...	... Rajachapitala, XXIII.
Babu Jagat Chandra Bhaumik ...	... Raja mehar, XXIV.
„ Dwarka Nath Dev ...	... Ramchandrapur, XXV.
„ Jagat Chandra Saha ...	.. Separa, XXVI.
„ Fani Bhusan Das ...	... Srikail, XXVII.

No. 3064J.—The 1st April 1905.—In exercise of the power vested in him by section 14, sub-section (1) of the Code of Criminal Procedure, 1898, the Lieutenant-Governor is pleased to confer upon each of the undermentioned Presidents of punchayats, in the district of Muzaffarpur, the powers of a Magistrate of the third class, and to declare that the said powers may be exercised by the said officers within the limits of the Unions noted against their respective names.

Muzaffarpur.

2. The Lieutenant-Governor is further pleased to declare, in pursuance of sub-section (2) of the said section 14, that the said powers are conferred and may be exercised by each of the said officers for a period of three years only from the date of this notification:—

Muzaffarpur thana.

Name of President.	No. of Union.
Mr. George Richardson	6
„ G. R. Toomey	23
Babu Jadunandan Sahai	29

Shatra outpost.

Babu Raghunandan Prasad Singh	7
Mr. V. N. Hickely	8

No. 3067J.—The 1st April 1905.—In exercise of the power vested in him by section 14, sub-section (1) of the Code of Criminal Procedure, 1898, the Lieutenant-Governor is pleased to confer upon each of the Presidents of panchayats in the district of Tippera, the powers of a Magistrate under sections 64, 127, and 128 of the same Code and to declare that the said powers may be exercised by the said officers within the limits of the Unions noted against their respective names.

Tippera.

2. The Lieutenant-Governor is further pleased to declare, in pursuance of sub-section (2) of the said section (14), that the said powers are conferred and may be exercised by each of the said officers for a period of three years only from the date of this notification.

Thana Hajiganj.

Name of President.	Name and number of Union.	
Maulvi Samiraddi	Asrabpur	I
Munshi Hamid Mian	Belghar	II
Babu Pyari Krishna Roy Chaudhuri ...	Bhajankhola	III
„ Navin Chandra Roy Chaudhuri ...	Bajarikhola	IV
„ Kamini Kumar Talukdar	Chitasi	V
„ Gobinda Chandra Poddar ...	Daracho	VI
Maulvi Abdul Aziz	Digchail	VII
Babu Adhar Chandra Das	Gandharvapur	VIII
Munshi Reasatulla ...	Hajiganj	IX
Maulvi Abul Kasim Mahamed Badiazzama Chaudhuri.	Kadla	X
Babu Sarada Prasanna Nag	Narasinhapur	XI
„ Lakshmi Kanta Aich	Pathair	XII
„ Girindra Chandra Roy Chaudhuri ...	Raisree	XIII
„ Abhay Charan Roy Chaudhuri ...	Sengaon	XIV
„ Gagan Chandra Lodh ...	Sasanpara	XV
Maulvi Mahamed Ismail	Sreepur	XVI
Babu Ramdayal Nag	Tarapalla	XVII
„ Bimala Charan Mitra	Toragar	XVIII

Thana Matlab.

Munshi Asrab Ali Miyan	Durgapur	I
„ Anwar Ali Sarkar	Eklaspur	II
„ Delwar Ali Chaudhuri ...	Fatehpur	III
„ Mahammad Hafiz Chaudhri ...	Iohakhali	IV
Babu Parvati Charan Majumdar .	Islamabad	V
Munshi Anwar Ali	Kaliarchar / Induriakandi	VI
Babu Raj Kumar Chaudhri ...	Maradone	VII
Munshi Hasan Ali Sarkar	Mohanpur	VIII
Babu Jyotish Chandra Sinha ...	Matlab	IX
„ Nil Kanta Bhattacharji ...	Naergaon	X
„ Basanta Kumar Roy ...	Naogaon	XI
„ Raj Kumar Das Chaudhri ...	Narainpur	XII
Munshi Abdul Jabbar	Nasirarchar	XIII
Babu Ram Kumar Das	Pingra	XIV
Munshi Jalaluddin Sarkar	Ramdaspur	XV
Babu Bepin Behari Sen Chaudhri ...	Rarikandi	XVI
Munshi Altabaddi Chaudhri	Saitnal	XVII

Thana Chauddagram.

Munshi Serajuddin Ahmad Chaudhri ...	Alkara	I
„ Serajuddin Ahmad	Baksaganj	II
Babu Nanda Kumar Biswas	Batisa	III
„ Harihar Dutta	Chauddagram	IV
Munshi Muhammad Fasi Chaudhri ...	Dhalua	V
Babu Gagan Chandra Chakravarti ...	Gholpasa	VI
Munshi Aftabaddin Ahmad	Gunabati	VII
„ Serajuddin Bhuiya... ...	Yadda	VIII
Babu Jogesh Chandra Das Gupta ...	Jagannathdighi	IX
Munshi Mahabbat Ali	Yapna	X
„ Mahammad Rafi	Kalikapur	XI
Babu Jagat Chandra Majumdar ...	Kankapaith	XII
„ Ishan Chandra Majumdar ...	Kasinagar	XIII
„ Pitambar Chandra Dutta ...	Makara	XIV
Munshi Aftabuddin	Munshirhat	XV
„ Gol Baksha	Patadda	XVI
Babu Ram Narayan Shaha ..	Raikot	XVII
Munshi Kalimuddin Majumdar ...	Samuksar	XVIII
„ Monohar Ali Miyan .. .	Satbaria	XIX
Babu Chandra Kumar Chaudhri ...	Sripur	XX
Munshi Rehanuddin Ahmad	Sukchail	XXI
Babu Akhay Kumar Majumdar ...	Uzirpur	XXII

Thana Chandina.

Name of President.	Name and number of Union.	
Maulvi Eakub Ali	Adda	I
Babu Girish Chandra Roy Chaudhri ...	Ambarpur	II
„ Sasi Kumar Bannerji	Barera	III
„ Pratap Chandra Chakravarti ...	Barkamta	IV
„ Bhagavan Chandra Chaudhri ...	Barura	V
Maulvi Sayed Emdadul Haq ...	Baxar	VI
Babu Pitambar Majumdar	Ghatighara	VII
Munshi Kafiluddin Ahmad Chaudhri ...	Khalaru	VIII
„ Mahammad Abu Miyan ...	Kasedda	IX
„ Zaynul Abedin	Khoshbas	X
Babu Rajani Kanti Bannerji... ...	Mahichail	XI
„ Haranath Roy	Nawabpur	XII
„ Jagannath Ganguli	Payalgacha	XIII
„ Gagan Chandra Majumdar ...	Rammohan	XIV
„ Gagan Chandra Chaudhri ...	Shaherpadua	XV
„ Abhoy Charan Dutta	Silmuri	XVI

Thana Kotwali.

Munshi Ali Ahmad *alias* Chand Miyan ...	Amratali	I
Syed Imamuddin	Bagsimail	II
Munshi Aftabuddin	Baherchar	III
Babu Jogendra Chandra Sen Biswas ...	Banasua	IV
Munshi Mahammad Faiz Kazi ...	Baharella	V
Babu Jagat Chandra Sen	Bhatpara	VI
„ Gaur Chandra Chaudhri ...	Bijoypur	VII
„ Purna Shasi Bhattacharji ...	Burichang	VIII
„ Nagendra Chandra Roy ...	Durgapur	IX
„ Mahesh Chandra Chakravarti ...	Fultali	X
Munshi Muhammad Eakub Ali ...	Galiara	XI
„ Ali Ahmad Chaudhri ...	Jagannathpur	XII
Babu Ishan Chandra Bhaumik ...	Kalirbazar	XIII
Munshi Alam Miyan	Lakhinagar	XIV
Babu Guru Charan Bhaumik... ...	Mokam	XV
Munshi Abid Ali	Myanamati	XVI
Babu Purna Chandra Chakravarti ...	Panchthupi	XVII
Munshi Gholam Hafiz	Rajapur	XVIII
Babu Gurudayal Bhattacharji ...	Sahibabad	XIX
„ Gourmohan Saha	Sankhachail	XX
Munshi Shujaat Ali Chaudhri ...	Tulatali	XXI

Thana Kasba.

Babu Sitanath Chakravarti ...	Akhaura	I
„ Haranath Das	Anantapur	II
„ Bipin Chandra Chaudhri ...	Astajangal	III
„ Navin Chandra Ghose ...	Binauti	IV
„ Ananda Chandra Chaudhri ...	Bisnauri	V
„ Sitanath Ghose	Brahmanpur	VI
„ Prasanna Kumar Das	Chandla	VII
„ Kamini Kumar Bardhan Roy ...	Chanbepur	VIII
„ Mohini Mohan Gupta	Devagram	IX
„ Kamini Kumar Dutta	Dharkar	X
Munshi Muzaffar Hossein	Dulalpur	XI
Babu Kali Kamal Dutta	Kaimpur	XII
„ Jagat Bandhu Das	Kasba	XIII
„ Atul Chandra Majumdar ...	Kenduai	XIV
„ Kailash Chandra Sinha ...	Kutimaijkhar	XV
„ Revati Kumar Bhattacharji ...	Lesiara	XVI
Munshi Muhammad Fatir ...	Madhabpur / Mukompur	XVII
Babu Shyam Sundar Shaha ...	Mandhabhag	XVIII
„ Girish Chandra Bardhan ...	Manianda	XIX
„ Mohesh Chandra Bhattacharji ...	Mehari	XX
„ Bharat Chandra Chakravarti ...	Mogra	XXI
„ Nobin Chandra Dutta	Mulagram	XXII
Munshi Wali Ahmad Chaudhri ...	Saidaabad	XXIII
Babu Hem Chandra Sen	Sasidal	XXIV
Munshi Syed Ahmad Kabir	Sahapur	XXV

Thana Nasirnagar.

Name of President.	Name and number of Union.	
Babu Rajani Kanta Kar	Bholakut	I
„ Kailas Chandra Roy	Buriswar	II
„ Mothura Lal Poddar	Chatalpara	III
Munshi Jaharaddi	Dhantalaia, Kathal Kandi	IV
Babu Prakash Chandra De Roy ...	Dharmandal	V
„ Mohes Chandra Datta	Fandauk	VI
„ Rajani Kanta Saha	Goalnagar, Dakshindia	VII
Maulvi Syed Sadulla	Gokarna	VIII
„ Masud Ali	Guniauk	IX
Babu Krishna Prosad Roy	Haripur	X
Munshi Syed Hira Mian	Khándura	XI
Babu Sarat Chandra Raha	Kunda	XII
„ Joy Chandra Bhadra	Nasirnagar	XIII
Munshi Isa Mian	Nurpur	XIV

Thana Daudkandi.

Munshi Abdul Ali	Alipur	I
Babu Akhil Chandra Roy	Amirabad	II
„ Syama Charan Bhadra	Barkanda	III
„ Harish Chandra Karmakar ...	Batakandi	IV
Maulvi Bazlar Rahman	Bhasania	V
„ Nawab Ali Akhan	Chandanpura	VI
Babu Gagan Chandra Chaudhuri ...	Chanderchar	VII
„ Kasi Chandra Chaudhuri ...	Chinamura	VIII
„ Ramkanai Poddar	Daudkandi	IX
„ Mohini Kumar Roy	Ellotganj	X
„ Akhil Chandra Das Bannick ...	Ghagatia	XI
„ Abhaya Charan Chakravarti ...	Ghaniar Char	XII
„ Harimohon Sarkar	Goalmari	XIII
„ Pyari Mohon Saha	Gobindapur	XIV
„ Gobinda Chandra Saha	Gouripur	XV
„ Purna Chandra Saha	Homna	XVI
„ Pandav Chandra Nath	Jagatpur	XVII
„ Sarat Chandra Pal	Jowar Gobindapur	XVIII
Munshi Ramizuddin	Jowar Narandia	XIX
Babu Brojendra Kumar Roy	Lalpur	XX
Munshi Shahabuddin	Monipura	XXI
Babu Gobinda Chandra Sen Gupta ...	Naiair	XXII
„ Barada Kishore Chakravarti ...	Noar Char	XXIII
Munshi Reazuddin Sarkar	Panchgachia	XXIV
Babu Purna Chandra Chaudhuri ...	Pennai	XXV
Munshi Azimuddin	Radhanagar	XXVI
Babu Ramnidhi Bhiya	Rajapur	XXVII
„ Gour Chandra Aich	Singula	XXVIII

Thana Bancharampur.

Babu Ram Kumar De	Akanagar, Jainagar	I
„ Rajani Kanta Das	Bancharampur	II
Munshi Samendar Ali	Bhurbhuria	III
„ Abdul Alim	Chhayani	IV
Maulvi Mahamed Rejan Ali	Daria Daulat	V
Munshi Amiraddi Sarkar	Dasdona	VI
„ Tazambul Ali	Rupasdi	VII
Maulvi Abu Mahamed Abdul Rahim ...	Salimabad	VIII
Babu Brojomohon Kar	Saybullakandi	IX
„ Mohim Chandra Ghosh	Tejkhali	X
„ Kunja Mohon Bal	Ujanchar, Krishnanagar	XI

Muzaffarpur.

No. 3070J.—The 1st April 1905.—In exercise of the power vested in him by section 14, sub-section (1) of the Code of Criminal Procedure, 1898, the Lieutenant-Governor is pleased to confer upon each of the undermentioned Presidents of panchayats in the district of Muzaffarpur the powers of a Magistrate

under sections 64, 127 and 128 of the same Code, and to declare that the said powers may be exercised by the said officers within the limits of the Unions noted against their respective names.

2. The Lieutenant-Governor is further pleased to declare, in pursuance of sub-section (2) of the said section 14, that the said powers are conferred and may be exercised by each of the said officers for a period of three years only from the date of this Notification.

Muzaffarpur Thana.

Name of Presidents.	Number of Union.
Maulvi Feda Hussain	1
W. H. Vincent, Esq.	
Babu Thakur Prasad	3
,, Biseear Lal Chowdhry	4
Maulvi Syed Tabarak Hussain	5
Babu Harballab Prasad	6
,, Daroga Thakur	7
,, Ramsundar Thakur	8
,, Lachmi Narain	9
,, Janki Singh	10
,, Bachoo Narain Thakur	11
,, Dhooni Singh	12
,, Dwarka Prasad	13
,, Ram Narain Singh	14
W. J. Ross, Esq.	15
A. K. Holltum, Esq.	16
Babu Rameswar Prasad	17
Mahanth Ganesh Das	18
Babu Fateh Narain Singh	19
Mahanth Ram Bhagat	20
Babu Barhamdeva Narain	21
,, Langtoo Singh	22
,, Ramkhelawan Sahi	23
M. Malik Ban	24
Babu Bhagwati Sahai	25
,, Dwarka Prasad	26
M. Hefazat Hussain	27

Minapur Out-post.

Babu Balgobind Singh	1
A. Toomey, Esq.	2
F. H. Rawlins, Esq.	3
Babu Nathuni Prosad Singh	4
,, Gobind Ojha	5
,, Kohail Singh	6
W. M. Vipan, Esq.	7

Shakra Out-post.

E. B. T. Studd, Esq.	1
Babu Bhikham Singh	2
M. Noorul Hussain	3
Babu Ajit Narain Singh	4
,, Barhamdeva Narain	5
E. D. M. Enshaw, Esq.	6
J. Brown, Esq.	7
C. Williams, Esq.	8
Babu Fateh Narain Thakur	9
,, Ayodhya Tewari	10

Hajipur Thana.

Babu Jadunandan Singh	1
,, Lalji Prasad Singh *alias* Bindesari Prasad Singh ...	2
,, Bhikham Prasad Singh	3
Syad Ali Raza Khan	4
Maulvi Ajmat Ullah	5
Babu Dwarka Singh	6
,, Debi Prasad	7
,, Raghoonandan Singh	8
,, Raj Mohan Singh	9
,, Matbar Singh	10
,, Deonandan Singh	11

Mahuar Out-post.

Name of President.	Number of Union.
Babu Ganesh Chandra Bhattacharje	1
,, Raghoonath Sahai	2
,, Mahabir Chaudhri	3
,, Bhagwat Narain Singh	4
Eradat Karim Khan	5
Babu Devaki Prasad Singh	6
,, Naud Kishore Singh	7
Shah Mahamed Karim, Sub-Registrar	8
Babu Bhagwat Narain Singh	9

Raghopur Out-post.

Babu Jamuna Prasad Singh	1
,, Gopal Singh	2
,, Nando Singh, son of Babu Beni Singh ...	3
,, Issar Singh	4

R. W. CARLYLE,
Offg. Chief Secy. to the Govt. of Bengal.

PUBLIC WORKS DEPARTMENT.

ESTABLISHMENT.

The 30th March 1905.

No. 84.—The following notification, issued by the Government of India in the Department of Revenue and Agriculture, is republished for information:—

No. 100, dated the 20th March 1905.—Mr. W. A. Inglis, Chief Engineer, first class, and Secretary to the Government of Bengal, Public Works Department, Buildings and Roads Branch, held charge of the office of Chief Engineer and Secretary to the Government of Bengal, Public Works Department, Irrigation and Marine Branches, in addition to his own duties from 3rd to the 5th March 1905, both days inclusive.

The 4th April 1905.

No. 86.—With reference to Bengal Government Notification No. 37, dated 13th February 1905, Mr. C. P. Warde, Executive Engineer, held charge of the Chota Nagpur Division, in addition to his own duties as Inspector of Works, Bhagalpore Circle, from the forenoon of the 1st March to the afternoon of the 19th March 1905.

M. J. SCORER,
Offg. Secy. to the Govt. of Bengal.

MARINE DEPARTMENT.

The 31st March 1905.

No. 40 Marine.—Intimation having been received of the outbreak of plague in Bhavanagar, it is hereby notified for general information that Bhavanagar is declared an infected port, and that the regulations for the prevention of the introduction of plague by sea, issued by Government, will be enforced in the ports of Orissa and in the port of Chittagong against vessels arriving from Bhavanagar.

W. A. INGLIS,
Secy. to the Govt. of Bengal.

The 31st March 1905.

No. 41 Marine.—In exercise of the powers conferred by section 3 of the Chittagong Port Commissioners Act, IV (B.C.) of 1887, the Lieutenant-Governor is hereby pleased to exclude from the limits of the port of Chittagong the jetties at double moorings, which were transferred to the Assam-Bengal Railway by the Government of India in their letter No. 01R.C. of the 27th March 1903, and also the railway approach lines leading to these jetties.

W. A. INGLIS,
Secy. to the Govt. of Bengal.

The 4th April 1905.

No. 42 Marine.—The Lieutenant-Governor is pleased to appoint Mr. C. M. McGuire, of the Calcutta Customs Preventive Service, to be Inspector of Antiscorbutics in the Port of Calcutta, with effect from 8th March 1905, under the terms of the notification dated 22nd February 1887, published at page 125, Part I, of the *Calcutta Gazette* of the 23rd idem.

W. A. INGLIS,
Secy. to the Govt. of Bengal.

The 4th April 1905.

No. 43 Marine.—Under section 7 of the Chittagong Port Commissioners Act, 1887, the Lieutenant-Governor is pleased to accept the resignation tendered by Mr. H. Luson of his appointment as the Chairman of the Chittagong Port Trust.

W. A. INGLIS,
Secy. to the Govt. of Bengal.

The 4th April 1905.

No. 44 Marine.—Mr. W. Maude, I.C.S., Commissioner of the Chittagong Division, is appointed, under section 9 of the Chittagong Port Commissioners Act, 1887, to be a Commissioner of the Port of Chittagong, *vice* Mr. H. Luson, resigned.

Mr. Maude is also appointed under section 10 of the Act to be Chairman of the Commissioners.

W. A. INGLIS,
Secy. to the Govt. of Bengal.

PUBLIC WORKS DEPARTMENT.

ESTABLISHMENT.

The 1st April 1905.

No. 85.—The following promotions are made in the Upper Subordinate Establishment of this Department, with effect from the 1st March 1905:—

Name.	From—	To—
Tafazzul Ahmed	Overseer, 2nd grade ...	Overseer, 1st grade.
Jotindra Nath Banerjee ...	Ditto ...	Ditto.

The 4th April 1905.

No. 87.—Babu Jagat Bandhu Bagchi, Supervisor, second grade, Rajshahi Division, is granted leave on medical certificate for six weeks, under article 336 of the Civil Service Regulations, in extension of that granted in Bengal Government Notification No. 33, dated the 7th Februury 1905.

M. J. SCOBIE,
Offg. Chief Engineer.

SUBORDINATE CIVIL SERVICE.

No. 2647A.

No. 2572A.—The 16th February 1905.—Maulvi Amiruddin Ahmed, substantive *pro tempore* Sub-Deputy Collector, under suspension, is removed from the service of Government with effect from the date of his suspension from office.

No. 2515A.—The 31st March 1905.—Maulvi Syed Mohamed Akbar, Probationary Sub-Deputy Collector, is appointed substantively *pro tempore* to the fourth grade of Sub-Deputy Collectors and is posted to the head-quarters station of the Cuttack district.

Cuttack.

He is also vested with the powers of a Magistrate of the third class.

No. 2557A.—The 3rd April 1905.—Babu Manindra Nath Basu, M.A., is appointed substantively *pro tempore* to the fourth grade of Sub-Deputy Collectors, and is posted to the Chota Nagpur Division.

Chota Nagpur Diyn.

He is vested with the powers of a Magistrate of the third class.

No. 2567A.—The 3rd April 1905.—Babu Amrita Lal Gupta, Sub-Deputy Collector, Orissa Division, is posted to the Bhadrak subdivision in the district of Balasore.

Orissa Division. Balasore.

No. 2569A.—The 3rd April 1905.—Babu Nripendra Nath Ray, substantive *pro tempore* Sub-Deputy Collector, Bhadrak, Balasore, is transferred temporarily to the head-quarters station of that district.

Balasore.

No. 2621A.—The 4th April 1905.—Babu Radha Madhab Naik, substantive *pro tempore* Sub-Deputy Magistrate, Howrah, is vested with the powers of a Magistrate of the second class.

Howrah.

No. 2623A.—The 4th April 1905.—Babu Bhupendra Nath Ghoshal, B.A., a passed student of the Agricultural Class, Sibpur Civil Engineering College, is appointed to be a Probationary Sub-Deputy Collector and is posted to the head-quarters station of the Muzaffarpur district.

Muzaffarpur.

R. W. CARLYLE,
Offg. Chief Secy. to the Govt. of Bengal.

REGISTRATION DEPARTMENT.

No. 1125P.—The 4th April 1905.—Maulvi Abdur Rahman Chaudhuri, Joint Sub-Registrar of Munshiganj at Rajabari, in the district of Dacca, is appointed to be Rural Sub-Registrar of Kakina, in the district of Rangpur.

Dacca.
Rangpur.

No. 1126P.—The 4th April 1905.—Babu Bepin Chandra Sen, Rural Sub-Registrar of Kakina, in the district of Rangpur, is appointed to be Joint Sub-Registrar of Munshiganj at Rajabari, in the district of Dacca.

Rangpur.
Dacca.

R. W. CARLYLE,
Offg. Chief Secy. to the Govt. of Bengal.

CIVIL MEDICAL DEPARTMENT, BENGAL.

No. 4005, dated Calcutta, the 28th March 1905.—Third-grade Assistant Surgeon Satis Chandra Mitra is allowed privilege leave for seven days, viz, from the 8th to the 14th December 1904, both days inclusive, under article 260, Civil Service Regulations.

J. LEWTAS, M.D., LT.-COL., I.M.S.,
Offg. Inspector-General of Civil Hospitals, Bengal.

No. 4329, dated Calcutta, the 31st March 1905.—Third-grade Assistant Surgeon Jamini Kanta Mukherji did supernumerary duty in the Medical College Hospital, Calcutta, from the 17th to the 23rd March 1905, both days inclusive.

No. 4392, dated Calcutta, the 3rd April 1905.—Second-grade Assistant Surgeon Jogneswar Mukerjee of the Giridih subdivision and Rattray Charitable Dispensary in the Hazaribagh district is allowed leave on medical certificate for three months under article 336, Civil Service Regulations, in extension of the leave sanctioned in this Department Notification No. 4147D., dated the 26th November 1904.

S. H. BROWNE, M.D., COL., I.M.S.,
Inspector-General of Civil Hospitals, Bengal.

NOTIFICATION.

Examination of Compounders at the Orissa Medical School, Cuttack.

IN accordance with the Government of Bengal Notifications Nos. 4042Medl., dated 2nd November 1896, and 337T.—M., dated 9th June 1897, notice is hereby given that the next half-yearly examination of Compounders will be held at 10 A.M. on Tuesday and Wednesday, the 25th and 26th April 1905, at the Orissa Medical School, Cuttack.

2. Every candidate must produce a certificate of training and a certificate of age and previous education, as required by Rule 9 (*vide* Government of Bengal Notification No. 4042Medl., dated 2nd November 1896, published in the *Calcutta Gazette* of the 4th November 1896, and circulated by the Inspector-General of Civil Hospitals, Bengal, to all Civil Surgeons, Superintendents of Medical Schools, Lunatic Asylums and Calcutta Hospitals with his Circular No. 60, dated 5th December 1896).

3. Male candidates must forward to the Superintendent of the Medical School, Cuttack, at least one week before the 25th April 1905, an examination fee of Rs. 5. Female candidates will be examined free of charge.

4. Should any candidate fail to pass the examination, he will forfeit his fee.

NOTE.—The attention of candidates is drawn to Rules 9, 10 and 12 (*a*) and (*b*), and of the persons granting the certificates to Rules 11 and 14 (3) and (4), and to the Certificate, Forms C and D, in the Schedule of the Government of Bengal's aforesaid Notification No. 4042Medl, dated 2nd November 1896.

B. C. OLDHAM, *Major*, I.M.S.,
Supdt., Medical School, Cuttack.

CUTTACK, *the 10th March 1905.*

HIGH COURT NOTICE.

BABU BEPIN BEHARI CHATTERJEE, Subordinate Judge, Jessore, is appointed to be a District Delegate under section 235A of Act X of 1865 and section 52 of Act V of 1881, respectively, within the local limits of his jurisdiction.

By order of the High Court,

A. P. MUDDIMAN,
Registrar.

HIGH COURT,
ENGLISH DEPARTMENT
(CIVIL);
The 30th March 1905.

Sheriff's Office, the 15th March 1905.

NOTICE is hereby given that the Second Criminal Sessions of the year 1905 of the High Court of Judicature at Fort William in Bengal, for the Town of Calcutta and Factory of Fort William, and the places subordinate thereto, will be held at the Court-house, in the Town of Calcutta, on Wednesday, the third day of May next, at 11 o'clock in the forenoon, and thenceforward from day to day until the said Sessions be over. And it is hereby proclaimed that all persons who are to prosecute any of the prisoners to be brought up for trial at the said Sessions be present then and there to prosecute.

E. CABLE, *Sheriff.*

সরিফ আফিস, সন ১৯০৫ সাল তারিখ ১৫ই মার্চ্চ।

সকলকে সমাচার দেওয়া যাইতেছে যে পূর্বে বাঙ্গালার কোর্ট উইলিয়ম দুর্গের অধীন সহর কলিকাতার ও অন্যান্য স্থানের ফৌজদারী বিচার নিষ্পত্তি জন্য আগামী সন ১৯০৫ সালের ৩রা মে বুধবার বেলা ১১ ঘটিকার সময় এবং যে পর্য্যন্ত সেসিয়ানের কার্য্য শেষ না হয় প্রতিদিন উক্ত সময়ে কলিকাতার হাইকোর্টের আপন আদালত ঘরে সন ১৯০৫ সালের দ্বিতীয় ক্রিমিনেল সেসিয়ান বসিবেক এবং এতদ্দ্বারা প্রচার করা যাইতেছে যে, যে সকল ব্যক্তি কোন করেদির বিরুদ্ধে ফৌজদারী মিছিল করিবেক তাহারা উক্ত স্থানে উক্ত সময়ে হাজির থাকিয়া মোকদ্দমা করে ইতি।

ইঃ কেবল, সরিফ।

EDUCATION DEPARTMENT, BENGAL.

Subordinate Educational Service.

The 25th March 1905.—Maulvi Abul Hashem Khan, M.A., is appointed to be an Assistant Master in the Rajshahi Collegiate School and to Class VIII of the Subordinate Educational Service, *vice* Maulvi Lutfur Rahman, B.A., transferred.

This cancels the order of the 7th February 1905, appointing Maulvi Abul Hashem Khan to be an Assistant Master in the Chapra Zilla School.

The 29th March 1905.—Babu Ishan Chandra Sen, B.A., Head Master, Malda Zilla School (Class IV), is allowed leave of absence for one month under article 271 (*i*) of the Civil Service Regulations, with effect from the 20th March 1905 or such subsequent date as he may have availed himself of it.

Maulvi Ela Newaz Khan, B.A., Assistant Head Master, Maldah Zilla School (Class VIII, substantive *pro tempore*), is appointed to act as Head Master of that institution, *vice* Babu Ishan Chandra Sen, on leave.

The 30th March 1905.—Babu Jogendra Nath Bose, B.A., Sub-Inspector of Schools, Darjeeling Terai (Class VIII), having returned to his duty on the forenoon of the 5th March 1905, the unexpired portion of the leave granted to him under the orders of the 6th March 1905 is cancelled.

The 1st April 1905.—Babu Revati Nandan, an Assistant Master in the Patna Training School and also Officiating Assistant Head Master of that institution (Class VIII), deceased, was absent on privilege leave, under article 271 (*i*) of the Civil Service Regulations from 1st December 1904 to 4th February 1905.

Babu Ram Prasad, B.A., an Assistant Master in the Patna Training School (Class VIII), acted as Assistant Head Master of that institution, *vice* Babu Revati Nandan, on leave.

Babu Raghubir Prasad, Head Master of the Middle Vernacular School, attached to the Patna Training School (on Rs 25), acted as an Assistant Master in the latter institution and in Class VIII of the Subordinate Educational Service from the 1st December 1904 to 6th January 1905, *vice* Babu Ram Prasad, on deputation.

Babu Kasi Nath, B.A., acted as an Assistant Master in the Patna Training School and in Class VIII of the Subordinate Educational Service, on Rs. 25 a month, from the 7th January to 4th February 1905, *vice* Babu Ram Prasad, on deputation.

Babu Bireshwar Das, B.A., Assistant Head Master, Bankura Zilla School (Class VI), is appointed to act as an Assistant Master in the Uttarpara Government School during the absence, on leave, of Babu Uma Charan Mitra, or until further orders.

This cancels the orders of the 15th February 1905 appointing Babu Mohesh Chandra Ghosh, B.A., an Assistant Master in the Bankura Zilla School (substantively *pro tempore* in Class VII), to act as an Assistant Master in the Uttarpara Government School during the absence, on leave, of Babu Uma Charan Mitra, or until further orders.

A. PEDLER,
Director of Public Instruction, Bengal.

INSTRUCTIONS FOR THE APPOINTMENT AND PROCEEDINGS OF VISITING COMMITTEES OF SECONDARY SCHOOLS MAINTAINED FROM PUBLIC FUNDS.

[These rules are supplementary to the rules for the management of schools, which are already in force.]

1. For every secondary school managed by Government or by a District Board, Municipal Committee or Joint-Committee there should be Visiting Committees, consisting of local residents adequately representing the classes from which the students are drawn.

2. For Government schools, except collegiate schools, the members of the Visiting Committees should be appointed by the District Officer in consultation with the Inspector of Schools. For collegiate schools they should be appointed by the Director of Public Instruction on the nomination of the Principals of the attached colleges, who should consult suitable local authorities before sending in their selections.

3. For schools managed by District Boards, Municipal Committees or Joint-Committees, the members should be appointed from among the members of the District and Local Boards, Municipal Committees or Joint-Committees, as the case may be, by the Chairmen concerned. Other gentlemen interested in education may also be appointed members.

4. The term of office of members of Visiting Committees should be for a period of three years from the date of their appointment. Any member should be eligible for reappointment at the end of that period at the discretion of the appointing authority. Members who have not fulfilled the duties for which they were appointed should not be reappointed on the expiry of the three years' term of office. A member should be appointed whenever a vacancy occurs.

5. Visiting Committees shall have no power to issue any orders to the Head Masters of schools, their functions being confined to the offering of advice for the consideration of the school authorities and the officers of the Education Department.

6. The Visiting Committee of a school should inspect the institution at least once a quarter. Visits should not, however, be paid to the school during school-hours more often than once a month. Due notice of visit should ordinarily be given to the Head Master, but surprise visits may be made when necessary. The number of members visiting a school on any occasion should not be more than two.

7. The Visiting Committee should either record their opinion in the Visitors' Book of the school for the information of the Inspector or the Deputy Inspector of Schools, or the Principal of the College, as the case may be, or may communicate their suggestions in writing direct. A copy of the remarks should also be forwarded in the case of schools managed by District Boards, Municipal Committees or Joint-Committees to the Chairman concerned within three days of the inspection.

8. The members of every Visiting Committee should elect from amongst themselves a Chairman and a Secretary, and submit their names to the District Officer, the Director of Public Instruction or the Chairman of the District Board, Municipal Committee or Joint-Committee, as the case may be, for approval.

9. A meeting of a Visiting Committee should be called by the Secretary when considered necessary, or at the requisition of any two members of the Committee, for the general discussion of matters relating to the school. Not less than seven days' notice should be given of any meeting.

10. The notice should set forth the business to be transacted at the meeting, and no business other than that so stated should be transacted, except with the consent of all the members present. When any business of which notice has not been given is considered at a meeting, the decision recorded or resolution adopted at such meeting should be communicated forthwith to all the members, and the subject should be capable of being re-opened at a subsequent meeting convened on a requisition made by three members of the Committee within seven days of the communication of the original resolution; but, save as hereinbefore mentioned, no subject once finally disposed of should be reconsidered within six months, unless two-thirds of the members consent by signing a requisition.

11. The maximum number of members of a Visiting Committee should be ten and the minimum six, and one-third of the members in office should form a quorum. The Chairman should have a casting vote, in addition to his ordinary vote, in cases where the votes of the members present are equally divided. In the absence of the Chairman, one of the members present should be elected to preside. Committees should formulate any further rules of business that may be necessary.

12. Under the directions of the Committee, the Secretary should carry on correspondence with the proper authorities on behalf of the Committee, and be in charge of all papers belonging to the Committee.

13. The Secretary shall keep a record of the proceedings of each meeting and submit it to the next meeting for confirmation. Such proceedings and all work done by a Committee shall be duly recorded in a book kept for the purpose, which should be open for inspection by all inspecting officers of the Education Department.

INSTRUCTIONS FOR THE APPOINTMENT AND PROCEEDINGS OF COMMITTEES OF MANAGEMENT OF AIDED SECONDARY SCHOOLS.

[These rules are supplementary to the rules already in force in schools aided by Government or by District Boards and Municipalities.]

1. The general management of an aided secondary school, high or middle, is subject to the rules prescribed from time to time by Government or the Department for the management of aided schools The local management should remain in the hands of a Committee of Management, the members of which should be so selected as to represent all classes of the community—legal, commercial, trading, industrial and agricultural; but in cases in which the Director of Public Instruction is satisfied that the promoters of a school can give guarantees for efficient management otherwise, it will be sufficient if it is placed under a Visiting Committee as in the case of a school maintained from public funds.

2. Appointments to a Committee of Management should be made with the approval of—

(*a*) The District Officer, in consultation with the Inspector of Schools, in the case of a school aided by Government;

(*b*) The Chairman of the District Board or Municipal Committee, in the case of a school aided by a District Board or Municipal Committee.

3. The members of a Committee of Management of a school should elect from amongst themselves a Chairman, a Secretary and an Auditor, and submit their names to the District Officer or the Chairman, as the case may be, for previous approval.

4. A meeting of the Committee should be called by the Secretary, usually once every month (except in the long vacation months), or oftener if need be. Not less than seven days' notice should be given of any meeting.

5. The notice should set forth the business to be transacted at the meeting, and no business other than that so stated should be transacted, except with the consent of all the members present. When any business of which notice has not been given is considered at a meeting, the decision recorded or resolution adopted at such meeting should be communicated forthwith to all the members, and the subject should be capable of being re-opened at a subsequent meeting convened on a requisition made by three members of the Committee within seven days of the communication of the original resolution; but, save as hereinbefore mentioned, no subject once finally disposed of should be reconsidered within six months, unless two-thirds of the members consent by signing a requisition.

6. The monthly audited accounts should be presented at the next month's meeting of the Committee for the purpose of being passed.

7. The maximum number of members of a Committee should be ten and the minimum six, and one-third of the members in office should form a quorum. The Chairman should have a casting vote, in addition to his ordinary vote, when the votes of the members present are equally divided. In the absence of the Chairman, one of the members present should be elected to preside. Committees should formulate any further rules of business that may be necessary

8. Under the direction of the Committee, the Secretary should carry on correspondence with the proper authorities on behalf of the Committee. He should also keep a record of the proceedings of each meeting and submit it to the next meeting for confirmation. Such proceedings and all work done by the Committee should be duly recorded in a book kept for the purpose.

9. The trust-deeds and other important papers relating to the school should be in charge of the Secretary or of some resident member of the Committee, except those which it is necessary to keep in the special charge of the Head Master; but all papers relating to the school in the shape of accounts and records should be available at any time for inspection by all inspecting officers of the Education Department.

10. No teacher should be appointed, promoted, suspended or removed, except by a resolution passed at a meeting of the Committee. In all cases of appointment, promotion and removal of the staff, the Head Master's opinion should be on record, and the Committee should always record reasons for removal, punishment, stoppage of promotion and supersession of the staff.

In exceptionally urgent cases relating to teachers other than the Head Master, however, the Secretary should, after consultation with the Head Master, make a provisional appointment in anticipation of the Committee's sanction; but the matter should be reported to the Committee at their next meeting for approval.

Similarly a provisional arrangement should be made by the Secretary in consultation with the Chairman, and subject to the approval of the Committee, in respect of a vacancy in the Head Mastership when the case is exceptionally urgent; but this should not be taken to dispense with the necessity of final confirmation by the existing educational authorities, as required under the grant-in-aid rules.

11. Subject to the provisions of the grant-in-aid rules, the list of holidays will be settled by the Secretary, in consultation with the Head Master. In the case of a difference of opinion between the Secretary and the Head Master, the matter should be referred to the Committee for decision.

12. The arrangement of classes, the settlement of the school routine, and all other details relating to school discipline and teaching should be in charge of the Head Master, acting under the advice of the departmental educational officers, but the Committee, however, should have the right to offer their opinion and advice in these matters in writing to the Inspector or the Deputy Inspector of Schools.

13. All questions relating to the promotion of boys and the selection of candidates for the Entrance and Scholarship examinations should remain in the hands of the Head Master and be subject to the supervision of the inspecting officers of the Education Department only.

STATE TECHNICAL SCHOLARSHIPS FOR NATIVES OF BENGAL.

1. With a view to provide for natives of India the higher technical education which may qualify them to assist in promoting the improvement of existing native industries, and the development of new industries wherever this may be possible, the Government of India are ready, as an experimental measure, to give a small number of Technical scholarships, if promising candidates, well qualified in some particular branch of industry, present themselves. The outlines of the scheme are sketched out below.

2. *Value of the scholarships*.—The value of the scholarships has been fixed at £150 a year, in addition to fees payable to the institutions where the scholars will study and travelling expenses; but Government will consider proposals for increasing it in special cases.

3. *Places and periods of tenure*.—Each scholarship is tenable for an average period of two years, which may be increased or reduced in special cases.

4. The scholarships may be held in Great Britain, on the Continent of Europe, or in America, and are payable from the date of the scholar's arrival in the country which he may select for study.

5. *Subjects of study*.—Law, Medicine, Forestry, Veterinary Science, Agriculture and Engineering have been excluded from the scope of the present proposal. The scholarships are in the first instance proposed to be used for the encouragement of the mining industry in Bengal, but any other branch of industry can similarly be helped and fostered. Industries in which native capital and enterprise are engaged, or likely to be engaged, and in which the trained scholar might, on return to his country, find scope for his skill and ability, will be particularly appropriate for selection.

6. *Conditions of award*.—The scholarships are tenable by persons who are natives of India within the meaning of section 6 of the Statute, 33 Vic., Cap. 3. A competent knowledge of English, or the language of any other country in which the candidate proposes to work and study is essential to enable him to take full advantage of the course of study.

7. In the matter of selection of scholars, Government will be guided by considerations of the candidate's capacity, intelligence, particular interest in and connection with the industry selected, and the assurance that he will continue to devote himself to the subject on his return to India. These being matters which cannot be decided by the holding of degrees obtained, by examination, or by competition, no special examination is considered necessary and none will be held. But a scholar before nomination should have received the best technical education available in the Province, in the particular industry which he has to study, and no candidate will be considered qualified unless he has displayed an aptitude for technical study.

8. No age-limit has been fixed. But it may be fixed by Government in certain cases.

9. The candidates for scholarships should submit certificates attesting (*a*) their moral character, (*b*) knowledge of the language of the country in which they elect to study, and (*c*) physical capacity, from recognized persons who may be considered fit to certify to these facts. These certificates will not be returned.

10. The scholars in England or elsewhere, as the case may be, will be under the control and supervision of the Secretary of State. The conditions under which they will hold the scholarships will be similar to those laid down for Government of India scholarships, and power will be retained to cancel a scholarship and to send the scholar back to India if his progress and conduct be not satisfactory.

11. *Returned scholars*.—No scholar will be bound on his return to India by any engagement to serve Government or a private firm, and the choice of his career will be in the first instance determined, on his return from Europe by his own inclination. Should any occasion arise, Government will be glad to turn his ability and increased knowledge to account as teacher in an Industrial school or in other capacities connected with the improvement of local industries.

12. Applications from natives of Bengal for such scholarships for the development of the mining industry, in the first instance, should be made direct to the Director of Public Instruction, Bengal, on or before the 1st May 1905. Full particulars should be furnished as to the past educational experience, training and future requirements of each applicant for a scholarship. Applicants should also indicate, if possible, what they wish to work at in their future careers on return to India. The scholarships will be awarded by the Government of India on the recommendation of the Local Government.

CALCUTTA,
The 4th April 1905.

A. PEDLER,
Director of Public Instruction, Bengal.

Award of Junior Scholarships on the Result of the School Final Examination of B and C classes for the year 1905.

[The scholarships are tenable for two years.]

B CLASS.

First Grade, Rs. 16 a month.

	Name.	School from which he passed.	Scholarship where tenable.
1.	Narendra Mohan Mazumdar...	Barisal Zilla School ...	Bihar School of Engineering.
2.	Rajendra Nath Dhar ...	Ditto ...	
3.	Satya Prakash Choudhury ...	Pabna Zilla School ...	Civil Engineering College, Sibpur.
	Second grade, Rs. 12 a month.		
1.	Jyanendra Mohan Guha ...	Dacca Collegiate School ...	Bihar School of Engineering.
2.	Gopeswar Saha ...	Mymensingh Zilla School ...	
3.	Kamini Kanta Basu ...	Comilla Zilla School ...	
4.	Ambica Charan Choudhury ...	Ditto ...	Civil Engineering College, Sibpur.
5.	Bibhuty Bhusan Nag ...	Dacca Collegiate School ...	Bihar School of Engineering.
	Third grade, Rs. 8 a month.		
1.	Pramatha Nath Sarkar ...	Pabna Zilla School ...	Bihar School of Engineering.
2.	Annada Charan Bhattacharjea	Comilla Victoria Collegiate School.	Civil Engineering College, Sibpur.
3.	Ganesh Govinda Maitra ...	Pabna Zilla School ...	Bihar School of Engineering.
4.	Digendra Nath Sarkar ...	Mymensingh Zilla School ...	Civil Engineering College, Sibpur.

C CLASS.

First grade, Rs. 16 a month.

	Patal Chandra Ghose ...	Uttarpara Government School	Presidency College.
	Second grade, Rs. 12 a month.		
	Kshitindra Nath Gupta ...	Hare School	Presidency College.
	Third grade, Rs. 8 a month.		
1.	Atul Chandra Sen ...	Hare School	Presidency College.
2.	Durga Charan Ganguli ...	Uttarpara Government School	

CALCUTTA,
The 30th March 1905.

A. PEDLER,
Director of Public Instruction, Bengal.

List of Candidates who passed the Survey examination for Pleaders held in February 1905.

Number in General Register.	Name of candidate.	Where appeared.
2.	Hari Das Basu	Civil Engineering College, Sibpur.
10.	Nanda Kisor Mukerjee	Ditto.
18.	Jitendra Kumar Das Gupta ...	Ditto.
19.	Hari Jiban Banerjee	Ditto.
28.	Upendra Nath Kundu	Ditto.
31.	Provas Chandra Goswami ...	Bihar School of Engineering.
15.	Rai Mohan Karmokar	Dacca Survey School.
41.	Kedareswar Roy	Ditto.
1.	Nihar Ranjan Banerjee	Cuttack Survey School.
8.	Lakami Narayan Sarkar ...	Ditto.
11.	Gopal Chandra Mukerjee ...	Ditto.
12.	Hanseswar Chattapadhaya ...	Ditto.
13.	Krishna Lal Chatterjee	Ditto.
14.	Kali Das Nandy	Ditto.
22.	Dines Charan Roy	Ditto.

A. PEDLER,
Director of Public Instruction, Bengal.

The 23rd March 1905.

List of successful candidates at the "B" class final examination, 1905.

(In order of merit.)

Name.	School.	Age. Yrs.	M.
Narendra Mohan Mazumdar ...	Barisal Zilla School ...	20	2
Rajendra Nath Dhar	Ditto ...	18	5
Satya Prokas Chowdhuri	Pabna Zilla School ..	17	7
Jyanendra Mohan Guha	Dacca Collegiate School ...	19	3
Gopeswar Saha	Mymensingh Zilla School ...	18	10
Satis Chandra De	Dacca Collegiate School ...	22	2
Kamini Kanta Basu	Comilla Zilla School ...	19	8
Ambika Charan Chowdhuri ...	Ditto ...	17	9
Hemanta Kumar Ray	Dacca Collegiate School ...	21	8
Bibhuty Bhusan Nag	Ditto ...	18	1
Promotha Nath Sarcar	Pabna Zilla School ...	19	11
Annada Charan Bhattacharjea ...	Comilla Victoria School ...	17	4
Gonesh Gobinda Maitra	Pabna Zilla School ...	18	8
Digendra Nath Sircar	Mymensingh Zilla School ...	16	9
Makhan Lal Saha	Pabna Zilla School ...	16	1
Jitendra Nath Ray	Rangpur Zilla School ...	16	10
Ambica Charan Sen	Ditto ...	18	9
Satis Chandra Das Gupta	Barisal Zilla School ...	15	3
Jatindra Nath Sen	Ditto ...	17	10
Lalit Mohan Ganguli	Ditto	15	10
Amrita Lal Chatterji	Ditto ...	15	10
Ajit Kumar Bandyopadhyaya ...	Midnapore Collegiate School ...	17	2
Muhammad Ataullah	Ranchi Zillah School ...	16	0
Prem Prokash Kachhop	Ditto ...	21	0
Rajendra Nath Das Gupta ...	Ditto ...	14	11
	"C" Class.		
Patal Chandra Ghose	Uttarpara Government School ...	17	7
Kshitindra Nath Gupta	Hare School ...	19	10
Atul Chandra Sen	Ditto ...	16	6
Durga Charan Ganguli	Uttarpara Government School ...	18	6
Lachmi Narayan	Patna Collegiate School ...	19	0

CALCUTTA,
The 28th March 1905.

A. PEDLER,
Director of Public Instruction, Bengal

ORDERS BY THE HON'BLE THE VICE-CHANCELLOR AND SYNDICATE OF THE CALCUTTA UNIVERSITY.

1. The Entrance Examination in 1906 will be held on the 12th March 1906 and following days.

Applications and fees for admission to the examination must reach the Office of the Registrar on or before the 31st January 1906.

2. The F.A., B.A., and B.Sc. Examinations in 1906 will be held on the 26th March 1906 and following days.

Applications and fees for admission to the above examinations must reach the Office of the Registrar on or before the 12th February 1906.

3. The M.A., Premchand Roychand Studentship, B.L., and Honours in Law Examinations in 1905 will be held on the 4th December 1905 and following days.

Applications and fees for admission to the M.A. Examination in 1905 must reach the Office of the Registrar on or before the 4th September 1905.

Applications and fees for admission to the Premchand Roychand Studentship Examination must reach the Office of the Registrar on or before the 5th June 1905.

Applications and fees for admission to the B.L. Examination must reach the Office of the Registrar on or before the 3rd November 1905.

Applications and fees for admission to the Examination for Honours in Law must reach the Office of the Registrar on or before the 4th September 1905.

4. The half-yearly Second L.M.S. Re-examination will be held on the 4th December 1905 and following days.

Applications and fees of candidates for admission to the Second L.M.S. Re-examination must reach the Office of the Registrar on or before the 20th November 1905.

SENATE HOUSE;
The 31st March 1905.

K. C. BANERJI,
Registrar, Calcutta University.

NOTICE.

IN connection with the Commercial classes in the Presidency College, Professor H. M. Percival will deliver a course of about 32 lectures in the *evening* on the Outlines of Political Economy.

The course will begin on Tuesday, the 7th March, at 6-30 P.M., and will be continued on Tuesdays and Fridays at the same hour until further notice. The first lecture will be open to the public. The subject will be treated popularly.

The fee for the whole course will be Rs. 5, payable in advance.

Tickets may be obtained from the College office between 11 A.M. and 4 P.M. on week days.

CALCUTTA, *The 20th March 1905.*

P. K. RAY,
Offg. Principal, Presidency College.

NOTICE.

COMMERCIAL CLASSES IN THE PRESIDENCY COLLEGE.

DAY classes in the following subjects will be opened in the College on the 25th June 1905 :—

1. English (modern), especially English correspondence, including Commercial correspondence, letter-drafting and précis-writing.
2. Arithmetic, including Commercial and Mental Arithmetic.
3. Book-keeping, Short-hand and Type-writing.
4. Commercial History and Geography.
5. Bengali, especially Commercial correspondence, letter-writing, précis-writing and translation.

All will be admitted to the Day classes who have passed the School Final or the Entrance Examination or who are able to satisfy the Education Department by passing a simple preliminary test examination.

There is no age limit.

The fee for the Day classes is Rs. 3 a month.

P. K. RAY,
Offg. Principal, Presidency College.

PRESIDENCY COLLEGE, CALCUTTA, *the 8th March 1905.*

NOTIFICATION.

IT is hereby notified for general information that the first half-yearly departmental examination of 1905 of Assistant and Deputy Magistrates and Sub-Deputy Collectors of Regulation and non-Regulation districts, of Cantonment Magistrates and of the officers employed in the Police, Forest and Public Works Departments in the districts of the Patna and Bhagalpur Divisions will be held at Bankipore in the Patna College Hall on Tuesday, the 25th April 1905, and the two following days.

The examination will begin at 11 A.M. on each day.

C. R. MARRIOTT, *Addl. Commissioner.*

PATNA COMMR.'S OFFICE, BANKIPORE, *the 29th March 1905.*

NOTIFICATIONS OF THE BOARD OF REVENUE.

No. 2463A.

NOTIFICATION.

LAND REVENUE.

B. T. & R. M.

THE HON'BLE MR. L. HARE, C.I.E.

Dated Calcutta, the 4th April 1905.

THE price-lists of staple food-crops in the local areas of Bengal, prepared under section 39 (1) of the Bengal Tenancy Act, VIII of 1885, for the period from the 1st of October 1904 to the 31st of December 1904, having been approved by the Board of Revenue, are published, for general information, under sub-section 4 of that section.

By order of the Board of Revenue, L. P.,
H. LEMESURIER,
Offg. Secretary.

Price-list (retail) of Staple Food-crops in the local areas of Bengal, prepared under section 39 of the Bengal Tenancy Act (VIII of 1885), for three months, from October to December 1904.

BURDWAN DIVISION.

1	2	3	4	5	6	7	8	9	10
District.	Local areas.	Marts at which prices were taken.	Staple food-crop or crops.	Market days for the preparation of price-lists.	Quantities per rupee in seers of 80 tolas Company's weight.			Average price for the quarter ending the 31st December 1904.	Remarks.
					October 1904.	November 1904.	December 1904.		
					S. c.	S. c.	S. c.	S. c.	
Burdwan	Sadar subdivision	Burdwan	Rice	Last day of the month	14 4	13 0	13 9	13 4	
	Raniganj ditto	Raniganj	Do.	27th of the month	13 4	13 0	16 0	14 1½	
	Katwa ditto	Katwa	Do.	Ditto	13 1	13 4	14 15	13 6½	
	Kalna ditto	Kalna	Do.	25th of every month	13 8	13 8	13 4	13 6½	
Birbhum	Sadar ditto	Suri	Do.	Last day of each month	13 13	15 0	15 0	14 4	
	Rampur Hat ditto	Rampur Hat	Do.	Ditto	13 0	15 4	15 4	14 8	
Bankura	Sadar ditto	Bankura	Do.	Last day of the month	15 0	15 0	15 0	15 0	
	Vishnupur ditto	Vishnupur	Do.	Ditto	16 0	16 0	16 0	16 2½	
Midnapore	Sadar ditto	Midnapore (Colonel gola).	Do.	Last day of each month	15 8	15 8	15 8	15 8	
	Ghatal ditto	Ghatal	Do.	27th of every month	14 0	14 0	16 4	13 13	
	Tamluk ditto	Tamluk	Do.	3rd Wednesday of every month	13 0	13 0	14 0	13 5½	
	Contai ditto	Contai (Kontala Bazar).	Do.	Any market day from 27th to 30th of every month.	20 0	20 0	18 0	19 5½	
Hooghly	Sadar ditto	Hooghly	Do.	Last Thursday of each month	11 4	13 14	13 14	13 5½	
	Serampore ditto	Bhuddeswar	Do.	Ditto	13 0	13 6	13 0	13 7½	
	Arambagh ditto	Jahanabad	Do.	Ditto	11 6	13 5	14 8	13 11½	
	Howrah ditto	Mohiarre	Do.	Ditto	13 0	13 5	13 13	13 5½	
	Uluberia ditto	Uluberia	Do.	Ditto	13 0	13 0	13 0	13 5½	

PRESIDENCY DIVISION.

					S. c.	S. c.	S. c.	S. c.	
24-Parganas	Diamond Harbour subdivision.	Mugra Hat	Rice	Last market day which immediately precedes the last Saturday of every month.	13 0	13 4	13 8	13 4½	
	Sadar subdivision	Chetlé Hat	Do.	Last Saturday of every month.	13 0	13 8	11 8	13 5½	
	Barasat ditto	Barasat	Do.	Last market day which immediately precedes the last Saturday of every month.	11 0	11 0	13 0	11 5½	
	Basirhat ditto	Badurea Barasat	Do.	Ditto	13 1	13 7	13 8	13 4½	
Nadia	Kushtia ditto	Mahadurkhali	Do.	28th of each month	14 8	14 8	14 8	14 8	
	Meherpur ditto	Kalmavazar	Do.	Ditto	12 4	11 8	11 8	11 12	
	Chuadanga ditto	Chuadanga	Do.	Saturday immediately preceding the 28th of each month.	13 8	13 8	13 8	13 8	
	Sadar ditto	Goarre	Do.	Last day of each month	13 8	13 8	13 8	13 8	
	Ranaghat ditto	Ranaghat	Do.	28th of each month	13 8	13 0	14 0	13 7	
Murshidabad	Sadar ditto	Berhampore	Do.	26th of every month	13 5	13 9	13 5	13 11½	
	Jangipur ditto	Jangipur	Do.	Market day which falls immediately before the 28th of each month.	13 14	13 4	15 2	14 12	
	Lalbagh ditto	Lalbagh	Do.	1st Monday of each month	13 0	13 0	13 8	13 3½	
	Kandi ditto	Kandi	Do.	Market day which falls immediately before the 28th of each month.	13 0	14 8	15 0	14 1½	
Jessore	Jhenida ditto	Jhenida	Do.	Thursday or Sunday falling on or next before the 28th of every month, except February, in which the Thursday falling on or next before the 26th.	15 0	13 0	13 0	13 0	
	Magura ditto	Magura	Do.	Ditto	13 0	13 0	13 0	13 0	
	Sadar ditto	Jessore	Do.	Monday or Friday falling on or next before the last day of every month.	14 0	13 0	15 8	14 2½	
	Narail ditto	Narail	Do.	Thursday or Sunday falling on or next before the 28th of every month, except February, in which the Thursday falling on or next before the 26th.	13 13	13 13	14 8	14 0	
	Bangaon ditto	Bangaon	Do.	Monday or Friday falling on or next before the 28th of every month, except February, in which the Monday or Friday falling on or next before the 26th.	14 8	13 8	13 8	13 6½	

PRESIDENCY DIVISION—*concluded.*

1	2	3	4	5	6	7	8	9	10
District.	Local areas	Marts at which prices were taken.	Staple food-crop or crops.	Market days for the preparation of price-lists.	Quantities per rupee in seers of 80 tolas Company's weight.			Average price for the quarter ending the 31st December 1904.	Remarks.
					October 1904.	November 1904	December 1904.		
					S. c.	S. c.	S. c.	S. c.	
KHULNA ...	Sadar subdivision ...	Khulna	Rice	Last market day of every month.	14 14	15 14	16 3½	15 10½	
	Satkhira ditto ...	Satkhira	Do.	28th of every month, except February, when the price will be taken on the 26th.	13 0	13 0	13 0	13 5½	
	Bagerhat ditto ..	Bagerhat	Do.	Sunday falling on or before the 28th of every month, except February, when the price will be taken on the Sunday falling on or before the 26th.	15 0	13 1	16 8	14 13½	

RAJSHAHI DIVISION.

					S. c.	S. c.	S. c.	S. c.	
RAJSHAHI	Sadar subdivision ...	Boalia	Rice	Last day of every month ...	13 8	14 4	15 0	14 4	
	Naugaon ditto ...	Naugaon	Do.	Ditto ...	14 4	13 14	14 0	14 11½	
	Nator ditto ...	Nator	Do.	Ditto ...	15 0	16 8	15 0	15 8	
DINAJPUR ...	District of Dinajpur	Railway Bazar Hát.	Do.	Last market day of every month.	14 8	15 0	15 0	14 13½	
JALPAIGURI	Sadar subdivision ...	Dinhasar ...	Do.	15th of every month	11 10	11 0	11 8	11 6	
RANGPUR	Sadar ditto ...	Rangpur ...	Do.	Last Wednesday or Saturday, whichever may be next to the last day of the month.	13 6	14 4	15 0	13 14	
	Nilphamari ditto ...	Nilphamari ...	Do.	Last Wednesday or Sunday, whichever may be next to the 28th of every month.	13 8	13 10	15 7½	13 11½	
	Kurigaon ditto ...	Kurigaon ...	Do.	Last Saturday or Tuesday next to the 28th of every month.	13 8	13 8	13 8	13 8	
	Gaibanda ditto ...	Gaibanda ...	Do.	27th of every month	13 8	13 12	16 8	14 9½	
BOGRA ...	District of Bogra ...	Bogra ...	Do.	Last Sunday of each month ...	16 8	16 8	16 8	16 8	
PABNA ...	Do. of Pabna ...	Pabna ...	Do.	15th of every month	16 8	15 8	15 0	15 8½	

DACCA DIVISION.

					S. c.	S. c.	S. c.	S. c.	
DACCA ...	Narayanganj subdivision	Madanganj ...	Rice	Last market day before the 15th of each month.	16 8	14 6	14 8	15 1	
	Sadar ditto ...	Dacca ...	Do.	Last market day of every month.	13 12	11 9	13 4½	13 13½	
	Manikganj ditto ...	Manikganj ...	Do.	Market day falling on or immediately before the 28th of every month.	14 4	14 0	14 0	14 1½	
	Munshiganj ditto	Mirkadim ...	Do.	Last Sunday of every month	15 0	14 8	15 0	14 13½	
MYMENSINGH.	Jamalpur ditto ...	Jamalpur ...	Do.	Last market day of the 3rd week of every month.	15 0	14 8	16 12	16 0½	
	Tangail ditto ...	Kagmari ...	Do.	Ditto ...	12 8	12 4	15 0	13 2½	
	Netrakona ditto ...	Netrakona ...	Do.	Ditto ...	16 0	16 0	15 14	15 15½	
	Sadar ditto ...	Nasirabad ...	Do.	Ditto ...	13 4	13 4	13 8	13 4½	
	Kishorganj ditto ...	Kishorganj ...	Do.	Ditto ...	14 11	14 14	14 14	14 13	

DACCA DIVISION—*concluded.*

1	2	3	4	5	6	7	8	9	10
District.	Local area.	Marts at which prices were taken.	Staple food-crop or crops.	Market days for the preparation of price-lists.	Quantities per rupee in seers of 80 tolas Company's weight. October 1904.	November 1904.	December 1904.	Average price for the quarter ending the 31st Dec. 1904.	Remarks
					S c.	S c.	S. c.	S c.	
Faridpur	Sadar subdivision	Faridpur	Rice	The last market day of the month.	16 0	14 0	13 4	14 6½	
	Madaripur ditto ...	Madaripur ...	Do.	On the market day preceding the 28th of each month.	14 0	13 0	14 0	13 10½	
	Gopalgunge ditto ...	Gopalgunge ...	Do.	Ditto ...	14 14	14 14	15 14	14 8½	
Backergunge.	Patuakhali ditto ...	Patuakhali ...	Do.	Last market day preceding the last day of the month	14 0	16 13	13 4	14 13	
	Pirojpur ditto	Pirojpur	Do.	Ditto ...	13 13	13 5	13 6	13 7½	
	Sadar ditto ...	Barisal	Do.	Last day of the month ...	14 4	14 4	13 4	13 14½	
	Dakhin Shahbazpur subdivision.	Bhola	Do.	Last market day preceding the last day of the month.	13 0	13 8	13 0	12 13½	

CHITTAGONG DIVISION.

					S. c.	S. c.	S. c.	S. c	
Tippera	Brahmanbaria subdivision	Brahmanbaria ...	Rice	Market day immediately preceding the 28th of the month.	13 13	12 1	14 9	13 8½	
	Sadar ditto ...	Comilla ...	Do.	Last market day of the month	13 8	14 8	14 8	14 1½	
	Chandpur ditto ...	Chandpur	Do.	Market day immediately preceding the 28th of the month	14 13	15 13	13 11	14 12½	
Noakhali	Sadar ditto ...	Kalitara Hat ...	Do.	Last market day of each month	15 0	14 13	16 2	15 4	
	Feuny ditto ...	Feuny Hat ...	Do.	Ditto ...	14 8	14 8	15 14	15 10	
Chittagong.	Sadar ditto	Chittagong ...	Do.	Last Saturday of the month ...	13 0	13 4	13 8	13 4	
	Cox's Bazar ditto ...	Cox's Bazar ...	Do.	Friday immediately preceding the 26th, or the 26th, if that day happens to be a Friday.	14 0	13 8	13 0	13 8	

PATNA DIVISION.

					S. c.	S. c.	S. c.	S. c.	
Patna	Sadar subdivision, excluding thana Maner.	Maraigan] ...	*Makai* up-land ...	28th of each month	23 0	21 0	22 0	22 0	
			Rice low-land ...		16 0	16 0	16 0	16 0	
	Dinapore subdivision, with thana Maner.	Dinapore ...	Barley up-land ...	Ditto	26 0	26 0	21 4	24 0½	
			Rice low-land ...		15 0	15 0	14 12	14 14½	
	Barh subdivision ...	Barh ..	*Makai* up-land ...	Ditto	26 0	26 0	26 0	26 0	
			Rice low-land ...		13 0	14 0	15 0	14 0	
	Bihar ditto ...	Bihar ...	Wheat up-land ...	Ditto	17 0	17 13	16 8	17 1½	
			Rice low-land ...		15 0	16 13	15 12	16 13½	
Gaya	Sadar ditto ...	Gaya ...	Wheat up-land ...	Last day of the month ...	16 15	17 7	16 14	17 1½	
			Rice low-land ...		13 13	13 13	14 0½	13 11½	
	Nawada ditto ...	Nawada	Wheat up-land ...	Last market day of the month, not being less than two days before the close of the month.	17 4	16 10	15 14	15 6	
			Rice low-land ...		13 8	14 2	15 10	14 0½	
	Jahanabad ditto ...	Jahanabad ..	Wheat up-land ..	Ditto ...	16 0	17 0	15 0	17 0	
			Rice low-land ..		13 0	13 0	14 0	14 0	
	Aurangabad ditto ...	Aurangabad ...	Wheat up-land ...	Last market day of the month, being not less than three days before the close of the month.	20 0	22 0	21 0	21 0½	
			Rice low-land ...		15 0	17 0	17 0	16 0½	

PATNA DIVISION—*concluded.*

1	2	3	4	5	6	7	8	9	10
District.	Local areas.	Marts at which prices were taken.	Staple food-crop or crops.	Market days for the preparation of price-lists.	Quantities per rupee in seers of 80 tolas Company's weight.			Average price for the quarter ending the 31st December 1904.	Remarks.
					October 1904.	November 1904.	December 1904.		
					S. c.	S. c.	S. c.	S. c.	
Shahabad	Sadar subdivision	Arrah	Wheat up-land	1st Saturday of each month	16 8	17 8	17 11	17 1½	
			Rice low-land		14 11	14 0	14 8	14 8½	
	Buxar ditto	Buxar	Wheat up-land	1st Thursday of every month	16 8	16 8	17 0	16 10½	
			Rice low-land		15 0	15 0	15 0	15 0	
	Sasaram ditto	Sasaram	Wheat up-land	Ditto	16 11	16 9	16 13	16 11	
			Rice low-land		14 8	16 0	17 0	15 13½	
	Bhabhua ditto	Bhabhua	Wheat up-land	Ditto	18 8	18 0	18 0	18 2½	
			Rice low-land		19 0	19 0	19 0	19 0	
Saran	Gopalganj ditto	Mirganj	*Makai* up-land	Last market day immediately preceding the 15th of each month.	21 10	24 10	26 2	24 2	
			Rice low-land		14 7	16 14	16 4	15 13½	
	Siwan ditto	Siwan	*Makai* up-land	Ditto	27 8	27 3	26 6	26 11	
			Rice low-land		15 10	16 0	16 9	16 1	
	Sadar ditto	Chapra	*Makai* up-land	15th of each month	24 0	25 0	27 0	25 6½	
			Rice low-land		15 0	15 0	15 0	15 0	
Champaran	Sadar ditto	Motihari	*Makai* up-land	Last day of the month	29 0	29 0	32 0	30 0	
			Rice low-land		17 8	17 8	17 8	17 8	
	Bettiah ditto	Bettiah	*Makai* up-land	Ditto	30 0	30 0	30 0	30 0	
			Rice low-land		18 0	17 8	18 0	17 12½	
Muzaffarpur	Sitamarhi ditto	Sitamarhi	*Makai* up-land	Last Wednesday of every month.	24 0	23 0	31 0	32 10½	
			Rice low-land		14 0	15 0	16 12	15 4	
	Sadar ditto	Muzaffarpur	*Makai* up-land	Last day of every month	27 0	26 0	28 0	27 10½	
			Rice low-land		14 0	14 0	14 0	14 0	
	Hajipur ditto	Hajipur	*Makai* up-land	Third day from the end of the month.	23 8	26 4	26 12	26 8	
			Rice low-land		14 0	15 0	15 0	14 10½	
Darbhanga	Madhubani ditto	Madhubani	*Marua* up-land	28th of each month, except in February, when it will be 26th.	32 8	34 7	29 2	28 5½	
			Rice low-land		16 4	15 9	16 2	16 10½	
	Sadar ditto	Darbhanga	*Marua* up-land	Last day of each month	31 0	33 0	33 0	32 5½	
			Rice low-land		16 8	17 0	17 0	17 0½	
	Samastipur ditto	Samastipur	*Makai* up-land	28th of each month, except in February, when it will be 26th.	30 0	30 0	31 0	30 5½	
			Rice low-land		16 0	16 8	17 0	16 9½	

BHAGALPUR DIVISION.

1	2	3	4	5	6	7	8	9	10
					S. c.	S. c.	S. c.	S. c.	
Monghyr	Sadar subdivision	Monghyr	Wheat up-land	Last day of every month	17 12	17 0	16 8	17 12	
			Rice low-land		13 0	14 0	15 12	14 4	
	Begusarai ditto	Begusarai	Wheat up-land	28th of every month	17 14	18 0	17 5	17 11½	
			Rice low-land		13 2	13 0	16 12	14 4½	
	Jamui ditto	Jamui	Wheat up-land	28th of every month	18 0	18 0	18 0	18 0	
			Rice low-land		13 0	15 0	15 0	14 0	
Bhagalpur	Sadar ditto	Bhagalpur	*Makai* up-land	The date preceding the close of the month.	25 8	25 4	28 12	26 8	
			Rice low-land		13 14	15 2	16 14	15 4½	
	Supaul ditto	Supaul	*Marua* up-land	The hat day that falls between the 24th and 27th of the month.	48 0	50 0	64 0	65 5½	
			Rice low-land		18 0	19 0	20 0	19 10½	
	Madhipura ditto	Madhipura	*Marua* up-land	The last hat day in the month but one.	40 0	30 0	40 0	33 5½	
			Rice low-land		20 0	18 0	20 0	19 5½	
	Banka ditto	Banka	*Makai* up-land	Ditto	18 12	20 0	26 4	21 10½	
			Rice low-land		10 14	15 0	16 4	13 15½	

BHAGALPUR DIVISION—*concluded.*

1	2	3	4	5	6.	7	8	9	10
DISTRICT.	Local areas.	Marts at which prices were taken.	Staple food-crop or crops.	Market days for the preparation of price-lists.	QUANTITIES PER RUPEE IN SERERS OF 80 TOLAS, COMPANY'S WEIGHT. October 1904.	November 1904.	December 1904.	Average price for the quarter ending the 31st December 1904.	REMARKS.
					S. C.	S. C.	S. C.	S. C.	
PURNEA ...	Araria subdivision ...	Araria	Wheat up-land ...	Last market day of the month.	15 0	14 0	14 0	14 8½	
			Rice low-land ...		15 0	16 0	16 0	15 10½	
	Kishanganj ditto ...	Kishanganj ..	Wheat up-land ...	Ditto ...	13 8	13 0	13 0	13 2½	
			Rice low-land .		11 0	12 0	12 0	11 10½	
	Sadar ditto ..	Beamoganj ...	Wheat up-land ...	Ditto ...	16 0	16 0	15 0	15 10½	
			Rice low-land ...		14 0	13 0	14 0	13 10½	
MALDA ...	District of Malda ...	Balia Nawabganj	Rice ...	Second Wednesday of each month.	12 0	11 0	13 0	12 1½	

ORISSA DIVISION.

					S. C.	S. C.	S. C.	S. C.	
CUTTACK ...	Sadar subdivision ...	Cuttack town .	Rice	1st Sunday of each month ...	15 1	15 4	17 1	15 12½	
	Kendrapara ditto ...	Kendrapara	Do.	Ditto ...	21 0	21 0	21 0	21 0	
	Jajpur ditto	Jajpur	Do.	Ditto ...	21 0	21 0	21 0	21 0	
	Banki ditto ...	Charchika Hat	Do.	1st Tuesday of each month ...	21 8	23 2	21 10½	22 1½	
BALASORE ...	Bhadrak ditto ...	Bhadrak ..	Do.	1st Wednesday of every month	20 0	21 0	20 0	20 5½	
		Chandbali	Do.	1st Thursday of every month	19 0	19 0	19 0	19 0	
	Sadar ditto ...	Balasore ...	Do.	1st Saturday of every month	18 0	18 0	18 0	18 0	
PURI ...	Sadar ditto ...	Puri ...	Do.	The 5th of every month ...	17 1	25 10	21 0	20 9	
	Khurda ditto ...	Khurda ...	Do.	Ditto ...	19 11	25 10	17 1	20 2	

No. 2440B.

NOTICE is hereby given that the Fifth Sale of Opium, the Provision of 1902-1903, will be held at the Government Opium Sale-room, No. 2 Bankshall Street, on Tuesday, the 2nd May 1905, at 11 A.M., and will comprise 4,000 chests, viz —

		Chests.
Opium manufactured at the Patna Factory, consisting of	...	2,000
Ditto at the Ghazipur Factory, consisting of	...	2,000
Total	...	4,000

2nd.—The general conditions of the sale now advertised will be the same as usual. They may be ascertained by reference to the notification issued on the 22nd November 1904 and published in the *Government* and *Exchange Gazettes*, or on personal application at the office of the Board of Revenue.

3rd.—The latest dates for deposit and clearance will be the 8th and 17th May 1905, respectively, that is to say, no Bank of Bengal Receipts, Government Promissory Notes or other Public Securities that may be tendered for deposit in redemption of Promissory Notes given by purchasers in the sale-room will be received after 3-30 P.M. of Monday, the 8th May 1905, and no Bank of Bengal Receipts in full payment of lots will be accepted after 3-30 P.M. of Wednesday, the 17th May 1905.

4th.—In addition to the quantity above advertised for sale, the following quantities, more or less, of the opium manufactured at the Patna and Ghazipur Factories will be brought to sale between the sale now advertised and December next on or about the dates

specified below. The Board of Revenue, however, reserve to themselves the right of altering these dates, should circumstances render it expedient to do so:—

Dates.	Manufactured at the Patna Factory; about chests.	Manufactured at the Ghazipur Factory; about chests.	Total; about chests.
On or about Tuesday, 6th June 1905 ...	2,000	2,000	4,000
On or about Tuesday, 4th July ,, ...	2,000	2,000	4,000
On or about Tuesday, 1st August ,, ...	2,000	2,000	4,000
On or about Tuesday, 5th September ,, ...	2,000	2,000	4,000
On or about Tuesday, 26th September ,, ...	2,000	2,000	4,000
On or about Wednesday, 1st November ,, ...	2,000	2,000	4,000
On or about Tuesday, 5th December ,, ...	2,000	2,000	4,000
Total ...	14,000	14,000	28,000

By order of the Board of Revenue, L. P.,
H. F. SAMMAN, *Offg. Secretary.*

BOARD OF REVENUE, L. P., CALCUTTA, *the 27th March 1905.*

ELECTION OF MUNICIPAL COMMISSIONERS.

NOTIFICATION.

IT is hereby notified for general information that, under rule 32 of the Rules made under clause (*a*), section 138 of the Bengal Local Self-Government Act, III of 1885, the following date is fixed for holding the election of members of Local Boards in the several thanas in the district of Faridpur:—

District.	Local Board.	Thana.	Date of election.
Faridpur ...	Sadar ...	Faridpur ...	24th June 1905.
		Bhushna ...	
		Ainpur ...	
		Bhanga ...	
		Muksudpur	
	Goalundo ...	Goalundo	
		Pangsa ...	
		Baliakandi	
	Madaripur ...	Madaripur	
		Shibchar ...	
		Palong ...	
		Kotalipara	
		Gopalgunge	

P. C. MITTER, *Magistrate.*

FARIDPUR MAGISTRACY, *the 29th March 1905.*

NOTIFICATION.

IT is hereby notified for general information that at a bye-election held under section 27 of the Bengal Municipal Act, III of 1884, as modified up to 1st November 1896, on Monday, the 13th March 1905, Babu Baroda Prasad Sarkar was duly elected a Commissioner of Ward No. I of the Chandrakona Municipality in the district of Midnapore, *vice* Babu Adhar Chandra Barik, removed under section 20 (*a*) of the Act.

N. L. BAGCHI, *Personal Asst.*, for *Offg. Commissioner, on tour.*

COMMR.'S OFFICE, BURDWAN DIVISION, CHINSURA, *the 30th March 1905.*

NOTIFICATION.

IT is hereby notified for general information that, in the exercise of the powers conferred on me by section 41 of the Bengal Local Self-Government Act, III of 1885, I appoint the following gentlemen to be members of the Union Committee at Kotalpur, in the district of Bankura:—

(1) Babu Umesh Chandra Chatterjee.
(2) ,, Rajani Ranjan Chakraverti.
(3) ,, Beni Madhab Mitra.
(4) ,, Nil Madhab Bhadra.
(5) ,, Kali Kumar Ghosh.
(6) ,, Hangseswar Mukherjee.
(7) Maulvi Mir Murad Ali.

N. L. BAGCHI, for *Offg. Commr., on tour.*

BURDWAN COMMR.'S OFFICE, CHINSURA, *the 30th March 1905.*

NOTIFICATION.

IT is hereby notified for general information that under rule 21 (*b*) of the Dispensary Manual, Mr. R. Canham has been appointed a member of the Committee for the Management of the Charitable Dispensary at Budge-Budge, in the district of the 24-Parganas, in the place of Mr. F. H. Lindberg, resigned.

E. W. COLLIN, *Commissioner*

COMMR.'S OFFICE, PRESY. DIVN., CALCUTTA, *the 29th March 1905.*

NOTIFICATION.

IT is hereby notified for general information, under Rule 21 (*b*) of the Dispensary Manual, that the following gentlemen are appointed to be Members of the Sherpur Harchandra Charitable Dispensary Managing Committee in the district of Mymensingh, *vice* the gentlemen noted against their names:—

1. Babu Abinash Chandra Guha, *vice* Babu Ram Sankar Bhadury.
2. „ Heran Chandra Chowdhuri, *vice* Rai Radha Ballav Chowdhuri Bahadur.
3. „ Hara Prasanna Das Gupta, *vice* Mr. Banwari Lal Chaudhuri, B.A., B SC.

T. INGLIS, *Commissioner.*

DACCA COMMR.'S OFFICE, *the 31st March 1905.*

The Calcutta Gazette.

WEDNESDAY, APRIL 5, 1905.

PART IA.

Orders and Notifications by the Government of India, &c.

[*Reprinted from the "Gazette of India."*]

The following order, issued by the Government of India in the Home Department, is republished for general information.

R. W. CARLYLE,
Offg. Chief Secy. to the Govt. of Bengal.

NOTIFICATION.

MEDICAL.

The 31st March 1905.

No. 339.—Major F. J. Drury, M.B., I.M.S. (Bengal), Professor of Pathology, Medical College, Calcutta, now officiating as Principal and Professor of Medicine in that College, is granted privilege leave for three months with furlough out of India for nine months in continuation, with effect from the date on which he may be relieved of his acting appointment.

H. H. RISLEY,
Secy. to the Govt. of India.

The Calcutta Gazette.

WEDNESDAY, APRIL 5, 1905.

PART IB.

ORDERS BY THE LIEUT.-GOVERNOR OF BENGAL.

MUNICIPAL AND LOCAL.

NOTIFICATIONS.

No 1697M.—The 30th March 1905.—It is hereby notified that, under section 27 of the Bengal Municipal Act, III of 1884, the Lieutenant-Governor is pleased to appoint Mr. R. G. M. Mitchell to be a Commissioner of the Garden Reach Municipality, in the district of the 24-Parganas, *vice* Mr. W. F. Mitchell, deceased.

24-Parganas.

No. 1699M.—The 30th March 1905.—It is hereby notified that, under section 59 of the Bengal Municipal Act, III of 1884, the Lieutenant-Governor approves the election by the Commissioners of the South Barrackpore Municipality, in the district of the 24-Parganas, of Babu Kala Chand Banerjee to be their Chairman, *vice* Babu Nil Money Das, resigned.

24-Parganas.

No. 1701L.S.-G.—The 30th March 1905.—It is hereby notified that, under section 11 of the Bengal Local Self-Government Act, III of 1885, the Lieutenant-Governor is pleased to appoint the following gentlemen to be members of the Sadar Local Board in the district of Bankura:—

Bankura.

Babu Benode Behari Mondal.	Munshi Meherulla Mondal.
„ Nobo Gopal Banerjee.	„ Abdul Baset.

2. The Lieutenant-Governor is also pleased to appoint the following gentlemen, under section 10 of the Act, to be members of the Board:—

Babu Kali Nath Chatterjee.	Babu Bama Charan Roy.

No. 1703L.S.-G.—The 30th March 1905.—It is hereby notified for general information that, in exercise of the power conferred on him by section 139 of the Bengal Local Self-Government Act, III of 1885, the Lieutenant-Governor is pleased to confirm the following additional bye-law which has been framed by the District Board of Monghyr under that section:—

Monghyr.

Any person driving on any road during the rainy season a cart loaded with more than 10 maunds shall be liable to a fine not exceeding Rs. 20.

The months of June to September inclusive shall be regarded as the rainy season for the purposes of this bye-law.

No. 1710L S.-G.—The 1st April 1905.—It is hereby notified that, under section 24 of the Bengal Local Self-Government Act, III of 1885, the Lieutenant-Governor is pleased to re-appoint the Deputy Commissioner of Ranchi to be the Chairman of the Ranchi District Board.

Ranchi

* *No. 1712L.S.-G.—The 31st March 1905.*—It is hereby notified that, under section 11 of the Bengal Local Self-Government Act, III of 1885, the Lieutenant-Governor is pleased to appoint the following gentlemen to be members of the Vishnupur Local Board in the district of Bankura :—

Bankura.

Babu Umesh Chandra Chaudhuri. | Babu Bholanath Bhattacharjee.
Munshi Asad Ali.

2. The Lieutenant-Governor is also pleased to appoint the following gentlemen under section 10 of the Act to be members of the Board :—

Babu Gora Chand Goswami. | Babu Jit Ram Hazra.
„ Kedar Krishna Banerjee. | „ Hari Nath Sarkar.
Babu Hrishi Kesh Mondal.

No. 1724M.—The 31st March 1905.—It is hereby notified that, under section 59 of the Bengal Municipal Act, III of 1884, the Lieutenant-Governor approves the election by the Commissioners of the Debhatta Municipality in the district of Khulna of Babu Jnanendra Nath Roy Choudhuri to be their Chairman, during the absence, on leave, of Babu Shyama Kanta Bhattacharjee.

Khulna.

L. P. SHIRREF,
Secy. to the Govt. of Bengal.

The Calcutta Gazette.

WEDNESDAY, APRIL 5, 1905.

PART II.

Advertisements.

[N. B.—Advertisements, Notices, &c., intended for insertion in this part of the Gazette cannot be received after Noon on Monday.]

LAND SALE NOTICES.

Notification A.

NOTICE is hereby given, under sections 6 and 13, Act XI of 1859, that the undermentioned estates and shares of estates in the district of Chittagong will be put up for sale at the office of the Collector of that district on the 1st May 1905 at 12 A.M. for arrears of revenue and other demands, which by law are realisable as arrears of land revenue.

When in columns 6, 7 and 9 of the appended statement it is stated that only a share is to be sold, it is to be understood that a separate account is kept for that share.

Tauzi No.	Name of mahal and pargana.	Sadar jama of whole estate.	Whether the whole estate is to be sold.	If only a share is to be sold, specification of such share or shares.	Names of proprietors of property to be sold.	If only a share is to be sold, the sadar jama of such share.	If the whole estate is to be sold, the arrears due from it.	If only a share is to be sold, the arrears due from it.
1	2	3	4	5	6	7	8	9
		Rs. A. P.				Rs. A. P.	Rs. A. P.	Rs. A. P.
361 361 362	Thana Sathania, taraf Sasum Amirabad.	1,461 12 8	A share is to be sold	Only the residuary share No. 8.	Taran Sinha Hazari and Srimati Golap Kumari.	966 15 6	.....	284 1 2
1178 1181 1182	Thana Eorwargange, taraf Doulat Shah.	632 0 6	The whole estate is to be sold.	.....	Shaik Mokbul Ahamad Chowdhury and Ali Ahamad Chowdhury.	.....	0 2 6	.....
1276 1276 1277	Thana Sathania, mauza Gerangya Haiseita, taraf Mungat Ram Hazari.	2,615 8 9	A share is to be sold.	Only the residuary share No. 8.	Taran Sinha Hazari	1,296 12 9	.....	262 12 8
1356 1361 1362	Thanas Patya, Sathania, Fatickchari and Hathazari, taraf Karim Khan.	713 12 6	The whole estate is to be sold.	.....	Anowar Ali ...	.....	177 12 6	.....
3429 3447 3454	Thanas Chakaria, Patia, Kosaan and Town, taraf Ram Sundar Kanungoe.	949 8 6	A share is to be sold	Only the residuary share No. 8.	Salamat Ali Khan Chowdhury, Sher Ali Khan Chowdhury and others.	661 6 8	.....	169 12 6
28278 28716 28868	Thana Chakaria, mauza Ahurampur, saiati taluk Bibi Fabaita, talak Shermoota Khan.	888 12 6	The whole estate is to be sold.	.....	Prasana Kumar Rai	.....	280 6 9	.....

NOTE.—The figures shown in columns 8 and 9 indicate the arrears remaining unpaid on the 28th February 1905.

Chittagong Collectorate, the 20th March 1905.

F. P. DIXON, Collector.

Notification B.

NOTICE is hereby given, under sections 5 and 13, Act XI of 1859, that unless the arrears mentioned below are paid on or before th next latest day of payment, viz, 28th April 1905, the undermentioned estates or shares of estates in the district of Balasore wi be put up for sale at the office of the Collector of that district on the 18th July 1905 at 12 o'clock noon for the said arrears.

When in columns 5, 7 and 9 of the appended statement it is stated that only a share is to be sold, it is to be understood that separate account is kept for that share.

Tauzi No.	Name of mahal and pargana.	Sadar jama of the whole estate.	Whether the whole estate is to be sold.	If only a share is to be sold, specification of such share or shares. (A)	Names of proprietors of property to be sold.	If only a share is to be sold, the sadar jama of such share.	If the whole estate is to be sold, the arrears due from it.	If only a share is to be sold, the arrears due from it.	Nature and amount of demand for which to be sold
1	2	3	4	5	6	7	8	9	10
		Rs. A. P.				Rs. A. P.	Rs. A. P.	Rs. A. P.	
1252	Mahal Belda, pargana Kamardachaur.	1,108 0 0	Whole ...	.....	Chaudhuri Gopendra Nandan Das Mahapatra of Gar panchoti, pargana Pataspur, district Midnapore.	.....	805 7 11	.....	Land Revenue for 1905 Ap kist. Fa under att... rrent by o... of Jumm... authority.
1130 Ijmali.	Kt. Taluk Purusottampur, pargana Kourdachar.	966 0 0	Share ...	9a. 6p. 14kt. 2b. 6g. 1k.	Sriburi Giri of Gop pargana Jallesore.	877 1 11	...	228 8 9½	Ditto.
785 Ijmali 3	Tk. Baita, pargana Nunkhand.	1,004 0 0	Do. ...	11a. 6p. 12kt. 9b. 2g. 3k. 1½ bed.	Kasi Nath Kar of Barobati, pargana Sunhat and others.	714 7 3½	.....	357 2 3½	Ditto.
	Tk. Sarmanga, pargana Randhiaorgara.	1,429 0 0	Whole ...	... ..	Munshi Latifur Rahemun Ahmed of Isufpur, pargana Randiaorgara and others.	.....	715 0 0	.....	Ditto.
869	Tappe Channab, pargana Satmalang.	664 0 0	Do. ...	.....	Kasinath Kar of Barobati, pargana Sunhat and others.	.....	331 9 1	.....	Ditto.
48	Tk. Reina, pargana Senout.	1,664 0 0	Do. ...	.. .	Munshi Latifur Rahemun Ahmed of Isufpur, pargana Randiaorgara and others	.....	342 0 0	.....	Ditto.
610 Ijmali	Tk. Hirapur, pargana Talsabang.	1,289 0 0	Share ...	9a. 7p. 8b.	Gobindprasad Das of Ganjia, pargana Nunkhand and others.	874 15 1½	.	297 13 4½	Ditto
823 Ijmali	A. P. Ma. Brahmapur, pargana Talsabang.	2,161 0 0	Do. ...	13a. 2p.	Chintamani Patra of Kunda, pargana Haveli Basta and others.	1,761 13 10	.....	879 2 3	Ditto
969	Tk. Churamani, pargana Ankura.	2,228 0 0	Whole ...	.....	Srimatya Chandramani Dei, mother and guardian of Kanungo Krishnaprasad Ray Bhramarbar of Churamoni, pargana Ankura.	.....	1,114 0 0	.. ..	Ditto.
994 1	Tk. Mabarakpur, pargana Banchas.	23,942 14 8	Share ...	16a.	Amrita Lal Chatrabarti, common Manager of Mandal's estate, Balasore, of Chinsura, pargana Arao, district Hooghly.	14,966 5 8	.....	7,482 8 0	Ditto.
361 Ijmali.	Tk. Panpur, pargana Ekera.	7,180 0 0	Do. ...	9a. 3p. 11kt. 6b. 6g. 1 $\frac{91 \text{ Sicca}}{\text{Sikki, } 1905}$ bed.	Kasi Nath Kar of Barobati, pargana Sunhat and others.	4,178 3 11	.....	2,086 1 11	Ditto.

(A) All other shares besides that specified will be excluded from the sale.

Balasore Collectorate, the 16th March 1905.

W. EGERTON, Collector.

Notice of Sale for Arrears of Revenue.

NOTICE is hereby given, under section 6, Act XI of 1859, Act VII (B.C) of 1868 and Act II (B.C.) of 1871, that the undermentioned tenures in the Satkania khas mahal, in the district of Chittagong, will be put up to public and unreserved sale at the Collector's office of that district on the 27th day of April 1905 for arrears of rent and cesses remaining unpaid on the 25th February 1905.

No. of tenure.	Name of tenure with its situation.	Name of proprietor.	Annual Jama.		Amount of arrears for which the tenure is to be sold.		
			Rent.	Cesses.	Rent.	Cesses.	Total.
			Rs. A. P.	Rs. A. P.	Rs. A. P.	Rs. A. P.	Rs. A. P.
24 1823	Thana Satkania, at present Rafeabad, mauza Nakora, mahal Noabad, bal taluk Raj Kumar Roy.	Mohesh Chandra Bhattacharji ...	1,139 0 0	127 0 6	157 2 0	17 10 6	174 12 6
17 480	Thana Kumarkhali, mauza Chambal, mahal Noabad, taluk Tajemahal.	Mus. Jobeda Khatoon herself and on behalf of minor sons Abdul Karim, Abdul Karim, Abdul Salim and Abdul Khalek and daughter Mus Jalleea Khatoon.	1,054 4 0	141 9 6	733 14 0	80 9 6	703 7 6
5418 5790	Thana Satkania, mauza Barobatia, mahal Noabad, taluk Lal Mahomed Darogha	Girija Kripa Lala and Sarada Kripa Lala	1,092 12 0	101 12 6	286 11 6	26 3 3	422 14 9
Asra 4848	Thana Satkania, mauza Chunate, mahal Noabad, taluk Fazalali Khan.	Salamat Ali Khan and Srimati Asharaf Bibee.	907 2 0	28 4 0	289 11 6	3 5 6	347 1 0

Chittagong Collectorate the 14th March 1905.

F. P. DIXON, Collector.

Notice of Sale for Arrears of Revenue.

NOTICE is hereby given, under section 6, Act XI of 1859, read with Act VII (B.C.) of 1868 and Act II (B.C.) of 1871 that the undermentioned Noabad taluks within the Cox's Bazar khas mahal, in the district of Chittagong, will be put up to public and unreserved sale at the Collector's office of that district on the 28th April 1905 for arrears of rent and cesses remaining unpaid on the 25th February 1905 :—

No. of tenure.	Name of mauza, thana, and mahal	Name of Talukdar.	Sadar Jama.		Amount of arrears for which the tenure is to be sold.		
			Rent.	Cesses.	Rent.	Cesses.	Total.
			Rs. A. P.	Rs. A. P.	Rs. A. P.	Rs. A. P.	Rs. A. P.
1							
1361	Mauza Teknaf, thana Teknaf, taluk Fate Chowdhuri.	Khema Chowdhuri and Nhaboke Chowdhuri and others.	1 374 6 0	83 10 6	691 11 0	17 8 9	709 3 9
73	Mauza Patili Machuakhali, thana Ramoo, taluk Shamadali.	Nur Mahammad	901 2 0	110 6 0	456 1 0	36 13 0	470 14 0
89	Mauza Kharulia, thana Ramoo, taluk Khayerullah.	Kamala Kanta Sen	676 6 0	89 13 0	263 10 3	23 4 0	276 14 3
103	Mauza Chakmookul, thana Ramoo, taluk Kaloo and Kamarali.	Jagat Chandra Bahaddar	1,288 13 0	114 7 6	534 0 0	38 2 6	Paid. 572 2 6
119	Mauza Nunachari, thana Ramoo, taluk Gou i Sankar and Bodya Nath Kanungoo.	Golam Bari and Golam Kiberia and others.	493 1 9	73 11 6	223 4 0	24 8 9	248 12 9
193	Mauza Bharual hali, thana Ramoo, taluk Mahammad Raja.	Sm. Arapzamal herself and for her minor sons Abu, Sanojjama, Kamaljama and Manirajjama and Sm Golapma herself and her minor sons Farok Ahamad and others.	1,106 4 0	141 13 6	484 2 0	47 4 0	531 6 0
204	Mauza Joarianala, thana Ramoo, taluk Gulamali.	Akter Kamal Chowdhuri	673 0 0	86 7 0	336 8 9	28 13 9	365 6 9
246	Mauza Manikpur, thana Chakaria, taluk Tholiafuroo.	Sm. Dinendra Kumari	809 0 0	110 6 6	329 4 0	36 12 0	366 0 6
279	Mauza Bhoolamanikchar, thana Chakaria, taluk Bibi Sprak.	Asmat Ali and Jaha Bax	1,579 8 0	173 0 0	493 6 6	57 15 0	550 5 0
296	Mauza Paharchanda, thana Chakaria, taluk Bibi Sprak.	Beni Madhab Sen	1,980 8 0	149 12 6	743 1 10	49 14 10	793 0 6
306	Mauza Tottoar, thana Chakaria, taluk Maridas Bahaddar, Har Chandra and Nabin Chandra.	Nesamat Ali Chowdhuri	1,633 14 0	191 6 6	539 9 0	63 13 6	603 5 6
330	Mauza Bettali, thana Chakaria, taluk Hari Dass Bahaddar.	Nesamat Ali	893 4 0	64 4 0	189 11 0	14 13 0	203 7 0
336	Mauza Rajakhali, thana Chakaria, taluk Bibi Sprak.	Nesamat Ali Chowdhuri	1,005 10 0	215 13 6	407 11 9	136 14 6	634 10 3
815	Mauza Patali, Machuakhali, thana Ramoo, Eimam, Sm. Maymuna Khatun and Khorshed Ali.	Sm. Maymuna Khaton Chowdhurin and Khorshed Ali Chowdhuri.	614 6 0	19 3 6	3,293 10 0	57 10 6	3,350 4 6

The 15th March 1905.

F. P. DIXON, Collector.

Notice of Sale for Arrears of Revenue.

NOTICE is hereby given, under section 6, Act XI of 1859, read with Act VII (B.C.) of 1868 and Act II (B.C.) of 1871, that the undermentioned Noabad taluks within the Sadar khas mahal, in the district of Chittagong, will be put up to public and unreserved sale at the Collector's office at that district on the 27th day of April 1905 for arrears of rent and cesses remaining unpaid on the 25th February 1905.

No. of taluk.	Name of taluk with its situation.	Name of proprietor.	Sadar Jama.		Arrear.	
			Rent.	Cess.	Rent.	Cess.
			Rs. A. P.	Rs. A. P.	Rs. A. P.	Rs. A. P.
203	Mauza Fakulia, thana Town, mahal Noabad, taluk Ahamad Ali.	Abdul Rahaman and others	1,295 4 0	236 5 6	494 12 0	80 7 0
6757	Mauza Jujhkala, thana Patikary, mahal Noabad, taluk Nur Ali Khan.	Obedar Rahaman Khan	2,536 4 0	168 12 0	203 8 0	42 13 9
6471	Mauza Bhoolpur, thana Patikary, mahal Noabad, taluk Nur Ali Khan.	Nipruchaiman Raja	703 8 0	36 12 0	263 10 0	13 12 0

The 14th March 1905.

F. P. DIXON, Collector.

Notice of Sale for Arrears of Revenue.

NOTICE is hereby given, under section 6, Act XI of 1859, read with Act VII (B.C.) of 1868 and Act II (B.C.) of 1871, that the undermentioned Noabad taluks within the Patia khas mahál, in the district of Chittagong, will be put up to public and unreserved sale at the Collector's office of that district on the 26th April 1905, for arrears and cesses remaining unpaid on the 25th February 1905:—

No. of tenure.	Name of mauza, thana and mahal.	Name of Talukdar.	Sadar Jama.		Amount of arrear for which the tenure is to be sold.		
			Rent.	Cesses.	Rent.	Cesses.	Total.
			Rs. A. P.	Rs. A. P.	Rs. A. P.	Rs. A. P.	Rs. A. P.
14141 / 19387	Thana Patia, mauza Charichanagar, mahal Noabad, taluk Ochman Sadagar, Eakup.	Raj Chandra Sen, son of Ram Kishore Sen of banhara and Shariatulla Sadadar.	520 0 0	14 13 0	195 2 0	5 9 0	200 11 0

The 14th March 1905.

F. P. DIXON, Collector.

Notice of Sale for Arrears of Revenue.

NOTICE is hereby given, under section 6, Act XI of 1859, read with Act VII (B.C.) of 1868 and Act II (B.C.) of 1871, that the undermentioned Noabad taluk, within the Raozan khas mahal, in the district of Chittagong, will be put up to public and unreserved sale at the Collector's office of that district on the 26th April 1905 for arrears of rent and cesses remaining unpaid on the 25th day of February 1905:—

No. of taluk.	Name of taluk with its situation.	Name of proprietor.	Sadar Jama.		Amount of arrears for which the taluk is to be sold.		
			Rent.	Cesses.	Rent.	Cesses.	Total.
			Rs. A. P.	Rs. A. P.	Rs. A. P.	Rs. A. P.	Rs. A. P.
1 / 23989	Thana Fatikchery, mauza Hapania, mahal Noabad, taluk Farad Jafar.	Neprushain Mung Raja, son of Mathu Chowdhuri, of Manikchery, in Hill Tract, Chittagong.	394 10 6	67 9 6	446 10 6	25 9 0	472 3 6

Chittagong Collectorate, the 14th March 1905.

F. P. DIXON, Collector.

Statement of the Affairs of the Bank of Bengal for the week ending 28th March 1905.

LIABILITIES.

		Rs.	A.	P.
Capital paid up		2,00,00,000	0	0
Reserve Fund		1,32,00,000	0	0
Public Deposits at Head Office ... ... Rs.	63,55 111 8 0	1,46 37,622	3	5
Ditto ditto at Branches ,,	77,82,510 11 5			
Other Deposits at Head Office and Branches ...		10,82 54,366	13	0
Bank Post Bills, &c.		12,00 548	10	6
Sundries		26,83,772	12	2
Rupees ...		15,99,76,810	7	1

ASSETS

		Rs.	A.	P.
Government securities		1,17,79,302	1	11
Other authorised investments		81,50,128	13	8
Loans on Government and other authorised securities		3,66 41,096	6	10
Accounts of credit on ditto ditto		2,09,35,654	0	7
Bills discounted and purchased		3,50,39,777	14	11
Balances with other Banks		12,50,941	7	2
Bullion		.....		
Dead Stock		18,16,802	6	10
Stamps		13,919	14	6
Sundries		13,20,808	7	3
		11,69,48,431	9	8
Cash & Currency Notes at Head Office* ... Rs.	2,71,08,117 9 2	4,30,27,878	13	5
Cash & Currency Notes at Branches† ... ,,	1,59,19,761 4 3			
Rupees ...		15,99,76,810	7	1

* Includes Sovs. & ½ Sovs., value Rs. 2,29,200 0 0
† Do. do. do. ,, 1,30,987 8 0
Rs. 3,60,187 8 0

By order of the Directors,

BANK OF BENGAL,
Calcutta, 30th March 1905.

H. F. FRESHWATER, Chief Accountant.
Rate for Demand Loans, 7 per cent.
Percentage 33·94.

W. D. CRUICKSHANK,
Secretary and Treasurer.

(373—1)

Statement of Government Promissory Notes enfaced for payment of Interest in London, under deduction of amount retransferred to India, and outstanding in the books of the Bank of Bengal on the 31st March 1905.

PARTICULARS.	3 per cent. of 1896-97.	3½ PER CENT. LOANS—							4 PER CENT. LOANS—							4½ PER CENT. LOANS—				GRAND TOTAL.
		Of 1842-43.	Of 1854-55.	Of 1865.	Of 1879.	Of 1903-04.	Of 1900-01.	Total.	Of 1935-33	Of 1885-86.	Of 1842-43.	Of 1854-55.	Transfer of 1865.	Reduced 4 per cent. loan of 1879.	Total.	Of 1879.		Transfer loan of 1879, 4½ per cent. portion.	Total.	
Balance of 15th March 1905 ...	93,70,000	1,61,46,700	10,40,23,500	2,23,69,400	1,24,12,700	.....	24,27,700	15,73,52,000	6,934	5,000	.....	3,500	40,300	2,500	58,734	5,000	...	29,500	34,500	16,67,46,234
ADD—																				
Amount of transferred to ... in London	.....	.....	.....	.....	.....	.....	.....	.....	.....	.....	.....	.....	.....	.....	.....	.....	...	.....	.....	.....
Amount enfaced at Madras up to 31st March 1905 ...	1,00,000	.....	.....	7,000	.....	.....	.....	7,000	.....	.....	.....	.....	.....	.....	.....	.....	...	.....	.....	1,07,000
Amount enfaced at Bombay up to 31st March 1905	.....	.....	.....	12,000	... ...	.....	...	12,000	.....	.....	... ...	.....	.....	.....	.....	.....	...	.....	.....	12,000
Amount enfaced at Calcutta between 16th and 31st March 1905	.....	13,000	14,50,000	51,600	.....	.....	.....	15,14,600	.....	.....	.....	.....	.....	.....	.....	.....	...	.....	.....	15,14,600
	93,70,000	1,61,59,700	10,54,73,500	2,24,29,400	1,24,12,700	.....	24,27,700	15,89,13,600	6,934	5,000	.....	3,500	40,300	2,500	58,734	5,000	...	29,500	34,500	16,83,78,234
DEDUCT—																				
Amount written off in the London registers ...	.....	27,600	1,23,000	79,400	.....	.....	.....	2,25,000	.....	.....	.....	.....	.....	.....	.....	.....	...	.....	.....	2,25,000
Balance on 31st March 1905 ...	93,70,000	1,61,32,100	10,53,50,500	2,23,50,000	1,24,12,700	.....	24,27,700	15,86,88,000	6,934	5,000	.....	3,500	40,300	2,500	58,734	5,000	...	29,500	34,500	16,81,53,234

NOTE.—From 9th June 1867 to 31st Jan. 1905—Enfaced from India, 11,991 lakhs; retransferred from London, 11,015 lakhs.

,, 1st Feb. 1905	,, 15th Feb.	,,	,,	,,	,,	7	,,	,,	,,	,,	15	,,
,, 16th ,,	,, 28th	,,	,,	,,	,,	5	,,	,,	,,	,,	3	,,
,, 1st Mar.	,, 15th Mar.	,,	,,	,,	,,	19	,,	,,	,,	,,	2	,,
,, 16th ,,	,, 31st	,,	,,	,,	,,	16	,,	,,	,,	,,	2	,,
						11,968	,,				11,037	,,
						11,037	,,					
					Balance against India	931	,,					

J. GRAVES,
Superintendent.

W. D. CRUICKSHANK,
Secretary and Treasurer.

PUBLIC DEBT OFFICE, BANK OF BENGAL,
Calcutta, 3rd April 1905.

In the Court of the Subordinate Judge, 1st Court, Patna.

EXECUTION CASE No. 297 OF 1904.

Nathuni Sahu, decree-holder, *versus* Babu Hariherdhari Singh, judgment-debtor.

NOTICE is hereby given that the following properties of the abovenamed judgment-debtor will be sold in the above execution case by the Nazir of the District Judge's Court in the verandah of the District Judge of Patna on the 17th April 1905 at 6 o'clock A M., for realisation of Rs. 13,122-7-9 :—

Serial No.	Tauzi No.	Sadr jama of the entire 16 annas.	Description of the property to be sold.	Thana.	Sub-Registry.	Share to be sold.	Estimated value.
		Rs. A. P.				As. P.	Rs.
1	348	1,980 6 1	Mahal Akberpore Bhadaur, pargana Masaudah, district Patna.	Bikram	Maubutpore ...	1 0	250
2	348	1,980 6 1	Mauza Mominpore Nadama, appertaining to mahal Akberpore Bhadaur, pargana Masaudha, district Patna.	Ditto ...	Ditto ...	1 0	225
3	348	1,980 6 1	Mauza Sheodaspore Koorkoori, appertaining to mahal Akberpore Bhadaur, pargana Masaudha, district Patna.	Ditto ...	Ditto ...	1 0	225
4	348	1,980 6 1	Mauza Hoosampore Lachooman, appertaining to mahal Bhadaur, pargana Masaudha, district Patna.	Ditto ...	Ditto ...	1 0	225
5	348	1,980 6 1	Mauza Mouzamabad Bali Panker, appertaining to mahal Akberpore Bhadaur, district Patna.	Ditto	Ditto	1 0	225
6	348	1,980 6 1	Mauza Alumpore Jurkha, appertaining to mahal Akberpore Bhadaur, district Patna.	Ditto	Ditto	1 0	225
7	348	1,980 6 1	Mauza Sarunti, appertaining to Akberpore Bhadaur, district Patna.	Ditto ...	Ditto	1 0	200
8	348	1,980 6 1	Mauza Punsouhi, appertaining to mahal Akberpore Bhadaur, pargana Masaudha, district Patna.	Ditto ...	Ditto ...	1 0	200
9	348	1,980 6 1	Mauza Sikria, appertaining to mahal Akberpore Bhadaur, pargana Masaudha, district Patna.	Ditto ...	Ditto ...	1 0	200
10	348	1,980 6 1	Mauza Suhaadpore Mauri, appertaining to mahal Akberpore Bhadaur, pargana Masaudha, district Patna.	Ditto	Ditto ...	1 0	200
11	348	1,980 6 1	Mauza Karunpoora, appertaining to mahal Akberpore Bhadaur, pargana Masaudha, district Patna.	Ditto ...	Ditto ...	1 0	200
12	348	1,980 6 1	Mauza Ibrahimpore Naurunga, appertaining to mahal Akberpore Bhadaur, pargana Masaudha, district Patna.	Ditto	Ditto ...	1 0	200
13	348	1,980 6 1	Mauza Mahammadpore Khanpore Daraull, appertaining to mahal Akberpore Bhadaur, pargana Masaudha, district Patna.	Ditto ...	Ditto ...	1 0	200
14	348	1,980 6 1	Mauza Harpoora, appertaining to mahal Akberpore Bhadaur, pargana Masaudha district Patna.	Ditto ...	Ditto	1 0	175
15	348	1,980 6 1	Mauza Ramjee Ganga, appertaining to mahal Akberpore Bhadaur, pargana Masaudha, district Patna	Ditto	Ditto ...	1 0	175
16	348	1,980 6 1	Mauza Wallpore Gopalpore, appertaining to mahal Akberpore Bhadaur, pargana Masaudha, district Patna.	Ditto ...	Ditto ...	1 0	175
17	348	1,980 6 1	Mauza Doorama, appertaining to mahal Akberpore Bhadaur, pargana Masaudha, district Patna.	Ditto ...	Ditto ...	1 0	175
18	348	1,980 6 1	Mauza Boolakipur Para, appertaining to mahal Akberpore Bhadaur, pargana Masaudha, district Patna.	Ditto	Ditto	1 0	175
19	348	1,980 6 1	Mauza Sharumpore, appertaining to mahal Akberpore, Bhadaur, pargana Masaudha, district Patna.	Ditto ...	Ditto ...	1 0	150
20	348	1,980 6 1	Mauza Ghunsampore Naeruwa, appertaining to mahal Akberpore Bhadaur, pargana Masaudha, district Patna.	Ditto	Ditto	1 0	150
21	348	1,980 6 1	Mauza Mohubbatauna, appertaining to mahal Akberpore Bhadaur, pargana Masaudha, district Patna.	Ditto	Ditto ...	1 0	150
22	348	1,980 6 1	Mauza Karunpoora, appertaining to mahal Akberpore, Bhadaur, pargana Masaudha, district Patna.	Ditto ...	Ditto ...	1 0	150
23	348	1,980 6 1	Mauza Alumpore Jurkha, appertaining to mahal Akberpore Bhadaur, pargana Masaudha, district Patna.	Ditto ...	Ditto ...	1 0	150
24	348	1,980 6 1	Mauza Ghunsampore Meera, appertaining to mahal Akberpore Bhadaur, pargana Masaudha, district Patna.	Ditto	Ditto ...	1 0	150
25	348	1,980 6 1	Mauza Suhaadpore Mauri, appertaining to mahal Akberpore Bhadaur, pargana Masaudha, district Patna.	Ditto	Ditto	1 0	225
26	348	1,980 6 1	Mauza Diara Usman, appertaining to mahal Akberpore Bhadaur, pargana Masaudha, district Patna.	Ditto ..	Ditto ...	1 0	225
27	348	1,980 6 1	Mauza Darawa appertaining to mahal Akberpore Bhadaur, pargana Masaudha, district Patna.	Ditto	Ditto ...	1 0	225
28	348	1,980 6 1	Mauza Murtapore Anant appertaining to mahal Akberpore Bhadaur, pargana Masaudha, district Patna.	Ditto	Ditto ...	1 0	225
29	348	1,980 6 1	Mauza Masaudha Khas appertaining to mahal Akberpore Bhadaur, pargana Masaudha, district Patna.	Ditto	Ditto ..	1 0	225
30	348	1,980 6 1	Mauza Kashopore appertaining to mahal Akberpore Bhadaur, pargana Masaudha, district Patna	Ditto ..	Ditto ..	1 0	225
31	19 1	325 12 3 16 as. mahal.	Mahal Bhudsara Asli and mauza Bhudsara and mauza Bhalona Bhurua Khoord and mauza Rampore Inde Salapore and mauza Jalalpore Khasa, appertaining to mahal Bhudsara, pargana Masaudha, district Patna.	Ditto	Ditto ...	2 0	350
32	19 1	325 12 3	Mauza Fatehpore, appertaining to mahal Bhudsara, pargana Masaudha, district Patna.	Ditto ...	Ditto ...	2 0	350
33	19 1	325 12 3	Mauza Bhudsara, appertaining to mahal Akberpore, Bhadaur, pargana Masaudha, district Patna.	Ditto	Ditto	1 0	150
34	19 1	77 5 4	Mauza Rampore Mokhum, appertaining to Lot Bhudsara and Chauk Ballari appertaining to mahal Bhudsara, pargana Masaudha, district Patna	Ditto	Ditto ...	2 0	300
35	19 1	261 8 5	Mauza Nazamp re Uiar, appertaining to Bhudsara and Bhaga Bighe and Bharathpoora, appertaining to mahal Bhudsara, pargana Masaudha, district Patna.	Ditto	Ditto	2 0	300
36	19 1	169 9 9	Mauza Kalayanpore Kotil, appertaining to mahal Bhudsara, pargana Masaudha, district Patna.	Ditto	Ditto	2 0	300
37	19 1	913 13	Mauza Bhubtanpore Raghoonath, appertaining to Lot Bhudsara and mauza Zuptipore Sungram and Chuanpore Udaichand and Keshanpore appertaining to mahal Bhudsara, pargana Masaudha, district Patna.	Ditto ...	Ditto ...	2 0	300
38	19 1	345 1 5	Mauza Achhoca and Chauk Achhoca, appertaining to Lot Bhudsara, pargana Masaudha, district Patna	Ditto ...	Ditto	4 0	600

Dated Bankipore the 29th March 1905. (387 1) AUWANI KUMAR GUHA, Sub-Judge.

In the 2nd Court of Sub-Judge, Gaya.

PRESENT:

RAI GOPAL CHANDRA BASU, BAHADUR

RENT EXECUTION CASE No. 270 OF 1904.

Diwan Bal Mokund Sahai, decree-holder, *versus* Pokhan Singh and others, judgment-debtors.

TO be sold in the above case by the Nazir of the District Judge's Court of Gaya, at 6 o'clock on 17th April 1905, for realization of Rs. 2,244-2, the right, title and interest of the judgment debtor in the following property:—

Serial No.	Tauzi No.	Name of the estate with pargana and zilla.	Sadar jama.	Share to be sold.	Approximate value.
1	52'6	Village Padranwan, pargana Samai, thana Nawadah, district Gaya.	Rs. A. P. 1,363 1 0	1a. 5d. 16c. 8b. 14p. and 5r. proprietary right.	Rs. 2,000

Dated Gaya, the 29th March 1905. GOPAL CHANDRA BASU, Offg. Subordinate Judge, 2nd Court.

(382—1)

Notice.

PURSUANT to the orders of Government, dated the 29th June 1881, particulars of the undernoted items of articles held by the Port Commissioners as Receivers of Wrecks, each article being of value above Rs 100, are published for general information in accordance with the provisions of section 70, Act VII of 1880:—

Date	Recovery No	Description of articles.	Weight.	Approximate value.	Where recovered.	Where lying
1905			Cwt. qrs. lbs.	Rs.		
8th March ...	19 P.A.	One stockless anchor ...	60 0 0	880	North of Upper Kulpee Buoy.	On board the A. V. *Vulcan*.
		Chain 2½" of 70 fathoms	152 2 0			

F. A. LOVELL, for Deputy Conservator.

Port Commissioners' Office, Calcutta, the 13th March 1905. (282—3)

SALE PROCLAMATION.

In the Court of the District Judge of Bhagalpur.

EXECUTION CASE No. 32 OF 1904.

Chunni Lal and others, decree-holders, *versus* Raja Padmanand Singh Bahadur, judgment-debtor.

THE following properties shall be sold by the Nazir of this Court in the sale-room on the 1st May 1905 at 12 noon, for the realization of Rs 73,340 8 as 15 gda.:—

1. Three and half annas share out of 16 annas of mahal Dhupher, asli and dakhli, pargana Dhupher, tauzi No. 3843, and jama sadar of the whole 16 annas, Rs. 10,433-10, estimated value Rs. 5,000.

2. Three and half annas share out of 16 annas of mahal Shahpur, asli and dakhli, pargana Utterkhand, tauzi No. 3624, and jama sadar Rs 1,623-13, estimated value Rs. 500.

W. TRUNON, District Judge.

Bhagalpur, the 27th March 1905. (369—1)

In the Court of the District Judge of Rajshahi.

EXECUTION CASE No. 3 OF 1903 (MONEY).

Raja Pramoda Nath Rai, decree-holder, *versus* Sara Khatun and others, judgment-debtors.

NOTICE is hereby given that the undermentioned property of the judgment-debtors will be sold, in execution of the above decree, at public sale in the Court premises, by the Nazir of the District Judge of Rajshahi, on the 15th May 1905 at 11 A.M. for the realization of Rs 23,794-14-9 only.

Three annas 15 gandas 1 kara 1 kranti 8 danti share of dihi Kholabaria, pargana Bhaturia, tappe Chapaila, station and sub-registry Nator, bearing touzi No. 432 of the Rajshahi Collectorate. Revenue payable for entire mahal is Rs. 3,944-6 (including Police). The property is subject to an incumbrance of Rs. 6,8x6-8-6.

S. N. HUDA, District Judge.

Rajshahi Judge's Court, the 29th March 1905.

(371—1)

ADVERTISEMENT FOR SALE

In the Court of the Munsif at Thakurgaon in the district of Dinajpur

EXECUTION CASE No 45 OF 1905 (MONEY).

Basanta Kumar Das Chaudhury, decree-holder, *versus* Nistarini Devi, judgment-debtor

THE undermentioned property will be sold at public auction at 12 o'clock noon on the 5th June 1905, in the Court-house of the Munsif at Thakurgaon, in the district of Dinajpur, by the Nazir for realisation of decretal dues Rs. 449-7-3 pies.

The 5 annas 6 gandas 2 karas and 2 krantis share of the judgment-debtor in mahal Lat Baliadangi, pargana Dehatta at an annual rental of Rs 2,867 13 annas 3½ gandas, bearing tauzi No. 150 of the Dinajpur Collectorate

RAM CHUNDRA BANERJEE,
Munsif of Thakurgaon

Thakurgaon, the 30th March 1905 (378—1)

ADVERTISEMENT FOR SALE.

In the Court of the Munsif at Thakurgaon in the district of Dinajpur.

EXECUTION CASE No 46 OF 1905 (MONEY).

Basanta Kumar Das Chaudhury, decree-holder, *versus* Manaswar Ali Chaudhury, minor, by his guardian Mashrap Ali Chaudhury, judgment-debtor

THE undermentioned property will be sold at public auction at 12 o'clock noon on the 5th June 1905, in the Court-house of the Munsif at Thakurgaon, in the district of Dinajpur, by the Nazir for realisation of decretal dues Rs. 197-2 6 pies

The 3 gandas 2 karas and 2½ dantis share of the judgment-debtor in mahal Lat Moheshpur, pargana Dehatta, at an annual rental of Rs. 3 407 4 annas 5 gandas, less Rs. 607 5 gandas and Dâk tax Rs. 10 10 annas 4 gandas, bearing tauzi No. 880 of the Dinajpur Collectorate.

RAM CHUNDRA BANERJEE,
Munsif of Thakurgaon

Thakurgaon, the 30th March 1905 (379—1)

Notification.

TO be peremptorily sold pursuant to the decree and order of the High Court of Judicature at Fort William in Bengal in its Ordinary Original Civil Jurisdiction made in Suit No. 419 of 1903 (wherein Behari Lal Benerjee is plaintiff and Amulya Chunder Banerjee is defendant), and dated 27th August 1903, and 23rd November 1904, respectively, by the Registrar, Original Side, in his sale-room in the Court-house, at 12 o'clock noon on Saturday, the 15th day of April 1905, the following property, viz.:—

Lot 1.—All that partly one or partly two-storied brick-built house, together with the rent-free land whereon the same is built containing by measurement 5 cottahs and 36 square feet instead of 3 cottahs and 15 chittaks as stated in the mortgage, a little more or less, being premises Nos. 9 and 9-1 Dewan's Lane (formerly No. 60-9 Doorga Churn Mitter's Street), in Sootanooty, in the North Division of the town of Calcutta and bounded on the north partly by Dewan's Lane and partly by the premises No. 8-1 Dewan's Lane, and partly by premises No. 2 Ramjoy Seal's Lane, on the south partly by Dewan's Lane and partly by the premises No. 10 Dewan's Lane, being the house of Bidhumukhi Dasi and others, on the east by Dewan's Lane, and on the west by the premises No 2 Ramjoy Seal's Lane

The abstract of title and conditions of sale may be seen at the office of the said Registrar or at No. 8 Old Post Office Street, the office of Babu Syama Charan Basak, the plaintiff's Attorney, on any day before the sale and will be produced at the sale.

W R. FINK, Registrar.

Syama Charan Basak, Attorney for the plaintiff

Calcutta High Court, Original Side, the 28th February 1905. (330—1—232)

Notice.

ZAMINDARI DÂK CESS

THE public are hereby informed that under orders of Government the Zamindari Dâk Cess of the district of Hooghly has been fixed at the rate of 9 (nine annas) per cent. for the year 1905 commencing from 1st January 1905, on the sadar jama of estates paying revenue of Rs 50 and upwards. The cess is payable in two instalments, viz., 29th May and 13th December, but under a special order of the Board of Revenue conveyed in their letter No. 295A., dated 13th January 1905, the amount of the second kist only will be realised this year, that of the first kist being remitted to reduce the balance at credit of the fund.

H. D. CAREY, Collector, Hooghly.

Chinsura, the 29th March 1905.

INCOME-TAX NOTICE.

THE persons named in the list, which is open for inspection at the Income Tax Office, No. 8 Charnock Place, Calcutta, are hereby informed that they have been assessed under Part IV of the Second Schedule of Act II of 1886 for the financial year 1905-06 according to the particulars specified therein, and they are hereby required to pay the amount of the tax to the Treasury Officer within sixty days from the date hereof, or to apply to me within thirty days from such date to have the assessment reduced or cancelled, failing which they will be proceeded against as the law provides.

G. GIRARD,
Collector of Income-Tax.

Income Tax Office; No 8 Charnock Place, Calcutta, the 1st April 1905.

Notice.

PURSUANT to section 76 of the Merchant Shipping Act. VII of 1880, notice is hereby given that the undermentioned gear and wreckage of the late Native vessel "Ganja Padrath" landed by the crew of the said "Ganja Padrath" on the 4th November 1904, are now at Hukitola False Point Port. Persons having claims to them should come to Hukitola False Point, and receive them after paying ware-house charges to the Receiver of Wrecks, Orissa, within one month from the date of publication of this notice, otherwise they will be put to public auction as they are of a perishable nature

List of articles saved from the wrecked ship "Ganja Padrath" in November 1904.

Articles.	Quantity.
	No.
Oars	4
Yard arm	4
Blocks (single wood)	6
Do. (double wood)	4
Do. (single iron)	1
Do. (quadruple wood)	1
Hawser	1
Sheaves	4
Sail and jib	6
Tarpaulin	1
Tiller and seat	1
Yard of four pieces	1
Spears	2
Anchors	2
One box containing campass ...	1
Bell	1
Globe (lantern)	1
	Bundles.
Twine serving	3
	No.
Fog signal	1
Lead line	1
Buckets (leather)	2
One bag containing top sail ...	1
Mast	1 at Jambu

W G MAYSTON,
Port Officer of Cuttack and Balasore Ports, and Receiver of Wrecks, Orissa Ports

The 29th March 1905.

Corporation of Calcutta.

IN exercise of the powers conferred by section 565 of the Calcutta Municipal Act, 1899, it is hereby declared that the General Committee of the Corporation of Calcutta intend to submit the following draft Bye-laws for the consideration of the Corporation.

Any person having any objection to the Bye-laws should submit it in writing to the Chairman of the Corporation before the 12th May 1905.

Bye-laws under section 559 (35) regarding prevention of cruelty in connection with the sale of live snipe.

1. No person shall sell or offer for sale any live snipe in any market in Calcutta

2. No person shall bring any live snipe to any market in Calcutta for sale or for any other purposes.

3. Any person who shall be guilty of a breach of any of the provisions of the foregoing Bye-laws under section 559 (35), shall be liable to a fine which may extend to Rs. 20 and in the case of a continuing breach of any such provision to a further fine which may extend to Rs. 10 for every day during which the breach continues after conviction of the first breach.

R. T. GREER, Chairman of the Corporation.

Municipal Office, the 3rd April 1905. (386—1)

WANTED for the Baikantapur Ward's Estate, Jalpaiguri, an Overseer on Rs. 50 per mensem. Preference will be given to a passed Subordinate, who has experience in building work.

Applications must be submitted to undersigned on or before the 15th April 1905.

J. A. BEALE,
District Engineer, Jalpaiguri.

Jalpaiguri, the 25th March 1905. (370—2)

Wanted

ONE Sub-Overseer on Rs. 30 with a fixed horse allowance of Rs. 5 per mensem. Experience in building works necessary. Must be a neat draftsman and possess qualifications of a Public Works Department Sub-Overseer. Application with copies of testimonials stating the age should reach the undersigned on or before the 15th April 1905.

J. R. LOWIS, Manager, Bettiah Raj

Bettiah, the 28th March 1905. (376—2)

Notice.

WANTED immediately a Head Clerk and Sheristadar for the Magistrate's office, Rajshahi, on a salary of Rs. 120 rising to Rs 200 by biennial increment of Rs. 8. The candidate selected will be required to execute a security bond for Rs. 250 for good and honest conduct.

A. GARRETT, Magistrate.

Rampur Boalia, the 31st March 1905. (380—1)

WANTED an Assistant Surgeon for the Azimganj Charitable Dispensary on a salary of Rs. 65 a month. Candidates with experience need apply to the undersigned on or before 10th April 1905

M. NAHAR, Chairman, Azimganj Municipality.

Azimganj, the 31st March 1905. (381—1)

WANTED three apprentices for the office of the Magistrate and Covenanted Deputy Collector of Howrah None need apply who has not passed the Entrance Examination and cannot write a good hand. Copies of certificates of age and of moral character from the institutions to which the candidates were last educated or from some responsible officer of Government should be furnished. The applications will be received by the under-signed up to the 8th proximo.

MONMOHAN CHAKRAVARTI, for Collector

Howrah, the 31st March 1905.

WANTED for the office of the Special Land Acquisition Officer, Katihar-Malda-Godagari Railway, a Head Clerk, pay Rs. 55; a Peshkar, pay Rs. 40; two Surveyors, pay Rs. 30 to Rs. 40 each; 8 or 10 Amins, pay Rs. 20 or Rs. 25 each; 6 or 8 Muharrirs and Clerks, pay ranging from Rs. 20 to Rs. 30 Those who have served in the office of a Special Land Acquisition Officer will have preference. Applications with copies of testimonials should be submitted *at once* to the Special Land Acquisition Officer, Katihar-Malda-Godagari Railway, Purnea.

J. H. LEA, Collector of Purnea.

Purnea, the 20th March 1905.

Notice.

WANTED a Superintendent for the Stamp Department of this Collectorate on a salary of Rs. 300 rising to Rs. 400 by annual increments of Rs. 20. The applicant must be conversant with the working of the Stamp Laws and possess sufficient legal knowledge to enable him to conduct prosecutions in stamp cases before the Presidency and Suburban Magistrates. Knowledge of the vernacular of the district is also necessary to understand such documents. A thorough office experience in controlling a department is indispensable.

Applications will be received up to the 8th April next.

M. GUPTA, Collector of Calcutta.

Calcutta Collectorate, the 24th March 1905.

Wanted

A SUB-INSPECTOR OF SCHOOLS on a salary of Rs. 50 per month and travelling allowance at Rs. 25. None need apply who is not qualified under the rules. Preference will be given to a Muhammadan candidate

Apply with copies of testimonials to the undersigned before the 10th April next.

B. C. SEN, Magistrate-Chairman.

Noakhali District Board's Office, the 23rd March 1905. (329—2)

Wanted

A SUB-INSPECTOR OF SCHOOLS permanently on a salary of Rs. 50 per month *plus* travelling allowance at the usual rates for the district of Manbhum. Applications will be received by the undersigned up to the 1st May 1905 None need apply who has not passed the B.A. examination or who does not know how to ride on horseback.

J. LANG,
Chairman, District Board, Manbhum.

Purulia, the 25th March 1905 (331—2)

Wanted

A DISTRICT ENGINEER for the District Road Committee, Sonthal Parganas, on a salary of Rs. 400 rising to Rs. 500 by annual increment of Rs. 10. None need apply who is not qualified under Bengal Government Notification No 3334L.S.-G. of the 20th December 1901. Applications will be received up to 10th April 1905.

C. H. BOMPAS,
Chairman, District Road Committee,
Sonthal Parganas.

Dumka, the 16th March 1905. (288—3)

GIRINDRA SIRCAR, M.A., B.L., intends to be enrolled as a Vakil of the High Court, Calcutta

(388—4—338)

Notice.

BABU GUNADA CHARAN SEN, M.A. B.L., Pleader, Barisal, intends to be enrolled as a Vakil of the High Court.

(272—4—239)

WANTED by the District Board of Birbhum a Head Clerk and Accountant for the District Board's Office on a salary of Rs 70 a month with allowance for doing work in connection with Public Works as will be determined by the Board at the end of every year and with future prospects of increase. Security of Rs. 150 required.

Applications from persons qualified under Bengal Government Notification No. 3334L.S.-G., dated 20th December 1901, and with good experience of District Boards' works, will be received up to the 20th April next.

S. C. MUKERJEE,
Chairman, District Board, Birbhum

Birbhum District Board's Office, the 16th March 1905
(291—4)

Notice.

WANTED a temporary Sub-Overseer, qualified under Government Notification No 3334L.S.-G., dated the 20th December 1901, on a salary of Rs. 25 rising to Rs. 30 a month by an annual increment of Re. 1 plus Rs. 15 horse allowance.

Applications will be received by the undersigned up to 15th April 1905

Preference will be given to one having experience in the construction and maintenance of roads and buildings.

F. N. FISCHER,
Chairman, District Board, Cuttack.

Cuttack District Board's Office, the 18th March 1905.
(317—3)

Wanted

A MONOPOLIST Contractor for the Jorhat Central Distillery in Sibsagar, district Assam. Term of contract three years Contractor to supply his own stills which must be of the Benigunta (Madras) pattern and all connected apparatus. If needed, Government would advance half the capital required. At the end of three years, if the contract is not renewed, Government will take over the stills and apparatus on a valuation of their existing condition. It is desirable that prices at which liquor is to be supplied to retail vendors should not exceed annas 7·6 per gallon 60° U. P. and annas 15 per gallon 20° U. P.

Apply to Subdivisional Officer, Jorhat, Assam.
(288—3)

Government School of Art, Calcutta.

APPLICATIONS are invited from qualified Indian candidates for the post of Vice-Principal of the Calcutta School of Art. The appointment is in the Provincial Educational Service; the minimum pay is at present fixed at Rs. 300. Candidates must be competent artists of good general education and with special qualifications in design and composition. Applications must be sent to the undersigned before the 30th April next.

E. B. HAVELL,
Principal, Government School of Art.

The 30th March 1905.

Arcuttipore Tea Company, Limited.

NOTICE.

THE Ordinary Annual General Meeting of shareholders of the above Company will be held at the Registered Office of the Company, No. 7 Church Lane, Calcutta, at 12 o'clock noon, on Friday, the 7th April 1905, for the purpose of receiving the Directors' Report, passing the Audited Accounts for the year ended 31st December 1904, declaring a dividend and transacting such other business as may be brought before the meeting.

The share Transfer Register will be closed from the 28th March to 7th April inclusive.

J. MACKILLICAN & Co., Secretaries.

Calcutta, the 27th March 1905. (268—1—232)

Notice.

ANUKHAL BHANDHAB BANIJYAGUR COMPANY, Limited, has been voluntarily wound up by an Extraordinary Resolution passed by the Company on the 12th February 1905.

MAHANANDU CHAKRABUTY,
Managing Director, A. B. B. Co., Ld.

Burdwan, the 8th March 1905. (276—1—234)

NOTICE TO CREDITORS.

In the Goods of Robert Gordon Shaw, deceased.

NOTICE is hereby given that Letters of Administration with copy Will annexed to the property and credits of the deceased abovenamed having on the 20th January 1904 been granted to Henry Cooper Eggar, all creditors and other persons having any claim against the estate of the abovenamed deceased are hereby required to send in writing the particulars thereof to the undersigned on or before the 30th day of April 1905, after which date the assets of the estate of the said deceased will be distributed by Henry Cooper Eggar, the Administrator, amongst the parties entitled thereto, having regard to the claims of which he has then had notice. And notice is hereby further given that the said Henry Cooper Eggar will not be liable for the assets or any part thereof so distributed to any person of whose claim he shall not have had notice at the time of such distribution; such notice to be sent to the undersigned.

Dated this 22nd day of March 1905.

SANDERSON & Co.
(30 Dalhousie Square),
Attorneys for Henry Cooper Eggar,
Administrator to the estate of the deceased.
(320—3—236)

NOTICE.

Estate Edward Jeremiah King, deceased

PURSUANT to section 320 of Act X of 1865 and sect on 42 of Act XXVIII of 1866, notice is hereby given that all persons having claims against the Estate of Edward Jeremiah King, deceased, late of Lymington Lodge, Southsea, in the county of Southampton in England, formerly a Jute Broker of Calcutta, should, on or before the 15th day of May 1905, send in particulars of such claims to the undersigned, after which date no claims will be admitted and the assets of the Estate of the deceased will be distributed.

ORR, DIGNAM & Co.,
Attorneys for Lockhart Abscander
Smith, Esq., the Administrator in India.

32 Dalhousie Square, South, Calcutta, the 28th March 1905. (366—1—235)

NOTICE TO CREDITORS.

In the goods of Frances Louisa Stevens, deceased.

NOTICE is hereby given that Letters of Administration with copy Will annexed to the property and credits of the deceased abovenamed having, on the 1st day of March 1905, been granted to Frederick Henry Eggar, all creditors and other persons having any claim against the estate of the abovenamed deceased are hereby required to send in writing the particulars thereof to the undersigned on or before the 30th day of April 1905, after which date the assets of the estate of the said deceased will be distributed by Frederick Henry Eggar, the Administrator, amongst the parties entitled thereto having regard to the claims of which he has then had notice. And notice is hereby further given that the said Frederick Henry Eggar will not be liable for the assets or any part thereof so distributed to any person of whose claim he shall not have

had notice at the time of such distribution, such notice to be sent to the undersigned

Dated this 15th day of March 1905.

T. H. WESTMACOTT,

Attorney for Frederick Henry Eggar,
Administrator to the estate of the deceased.

(283—3—224)

Estate Francis Boyle Pearson, I.C.S., retired.

NOTICE is hereby given that all creditors and other persons having any claims against the estate of the deceased abovenamed are hereby required to send in writing the particulars thereof to Messrs. King, Hamilton & Co., 7 Hare Street, Calcutta, on or before the 17th day of May 1905, after which date the undersigned will distribute the assets of the estate of the said deceased among the parties entitled thereto having regard to the claims of which he has then had notice.

And notice is hereby further given that the undersigned will not be liable for the assets or any part thereof so distributed to any person of whose claim he shall not have had notice at the time of such distribution.

Dated this 23rd day of March 1905.

A. J. KER,

Administrator with Will annexed of the
Property and Credits of the deceased.
7 Hare Street, Calcutta.

(322—3—229)

Estates John Asteley Cave Browne, District Superintendent of Police, Suri, Birbhum, and Amy Cave Browne, his wife.

NOTICE is hereby given that all creditors and other persons having any claims against the estates of the deceased abovenamed are hereby required to send in writing the particulars thereof to Mrs. A Burvill Holmes, 52 Barrack Road, Barrackpore, before the 10th day of May 1905, after which date the assets of the Estates of the said deceased will be distributed among the parties entitled thereto having regard to the claims of which she has then had notice.

And notice is hereby further given that Mrs. Holmes will not be liable for the assets or any part thereof so distributed to any person of whose claim she shall not have had notice at the time of such distribution.

Dated Barrackpore, this 24th day of March 1905.

(326—3—231)

In the matter of R. Scott Thomson and Company, Limited, "and reduced" and In the matter of the Indian Companies Act, 1882.

NOTICE is hereby given that the order of the High Court of Judicature at Fort William in Bengal, dated the 23rd day of March 1905, confirming the reduction of the capital of the abovenamed Company from Rs 5,00,000 to Rs 2,50,000 and the Minute (approved by the Court) showing with respect to the capital of the Company as altered the several particulars required by the above Act were registered by the Registrar of Joint Stock Companies, Calcutta, on the 29th day of March 1905.

The following is the minute referred to—

"The capital of R. Scott Thomson and Company, Limited (and reduced henceforth) is Rs. 2,50,000 divided into 1,000 shares of Rs 250 each instead of the former capital of Rs. 5,00,000 divided into 1,000 shares of Rs. 500 each At the time of the registration of this minute 934 of the said shares have been issued and are fully paid up and the remaining 66 shares are unissued."

The 29th day of March 1905.

MORGAN & Co,

No. 1 Hastings Street, Calcutta Solicitors for the Company.

(334—1—241)

Estate late Major George Howard Brethertton, Indian Army.

NOTICE is hereby given that all creditors and other persons having any claims against the estate of the deceased above named are hereby required to send in writing the particulars thereof to Messrs. King, Hamilton & Co., 7 Hare Street, Calcutta, on or before the 25th day of May 1905, after which date the undersigned will distribute the assets of the estate of the said deceased among the parties entitled thereto, having regard to the claims of which he has then had notice.

And notice is hereby further given that the undersigned will not be liable for the assets or any part thereof so distributed to any person of whose claim he shall not have had notice at the time of such distribution

A. J KER,

Administrator with Will annexed of the
Property and Credits of the deceased
7 Hare Street, Calcutta.

Dated this 30th day of March 1905. (377—3—242)

Notification.

ON account of the Hindu festival *Mohamoha Baruni* the sale advertised in this paper on the 8th of March instant to be held on the 1st of April has been adjourned to Saturday, the 8th of April, at the same time and place.

W. R. FINK.

Commissioner of Partition in suit
Hemangini Dassee *versus* Brojosundery Dassee.

(375—1—240)

INSOLVENT NOTICES.

In the matter of SATIS CHANDRA BISWAS and DWARIKA NATH BOSE, insolvents.

On Monday, the 6th day of February last, it was ordered that the matters of the petition of the said insolvents be heard on Tuesday, the 4th day of April next, and that the said insolvents do then attend to be examined before the said Court.

O. C. Ganguly, Attorney. (333—2)

In the matter of OSWALD ERIC DAVIDSON, an insolvent.

On Thursday, the 2nd day of March instant, it was ordered that the matters of the petition of the said insolvent be heard on Tuesday, the 4th day of April next, and that the said insolvent do then attend to be examined before the said Court.

Insolvent in person. (367—2)

In the Court of the District Judge of Hooghly.

In the matter of Jaggeshar Khanra, an insolvent.

JAGGESHAR KHANRA of Wadipur, thana Domjur, district Hooghly, was on the 3rd day of March 1905 declared an insolvent and discharged under section 351, Civil Procedure Code, on the 23rd idem

G K. DEB, District Judge.

Hooghly District Judge's Court, the 27th March 1905 (372—1—243)

In the Court of the District Judge of Dinajpur.

IN THE MATTER OF GOMIR MANDAL, AN INSOLVENT.

GOMIR MANDAL, son of late Ghoshai Mandal, of Koch Khirahin, police-station Patnitola, district Dinajpur, was on the 11th day of March 1905 declared an insolvent

W. S. COUTTS, District Judge

Dinajpur Judge's Office, the 23nd March 1905.

(335—1—237)

Notice.

THE next annual stock-taking of the Indian Law Reports kept at the Bengal Secretariat Book Depôt will commence on the 1st April and will last till the 19th April, 1905, inclusive. The public are hereby informed that all issues of the said Reports from the said Depôt to subscribers and officials will be suspended during the period.

L. C. ADAMI,

Secretary to the Bengal Council and
Assistant Secretary to the Government of Bengal,
Legislative Department.

The 12th December, 1904.

CALCUTTA POST OFFICE NOTICE

Mails for—	Date and hour of closing at the General Post Office, Calcutta		Route by which despatched.
	1905.	P.M.	
United Kingdom, Aden, Egypt, Europe, America, West Africa *vid* United Kingdom and East Africa *vid* Aden (and also South Africa, if superscribed on the cover *vid* United Kingdom or Aden).	Apl. 6	At 6 30	Per P. & O. steamer from Bombay.
Parcels and money-orders for the United Kingdom and other Foreign places.	,, 5	Parcels, 5 P.M.; M.-O., 4 P.M.	Ditto ditto.
* Australasian Colonies ...	,, 10	At 7-30	*Vid* Tuticorin and Colombo.
† Straits Settlements (also China and Japan, if the Steamer's name is superscribed on the cover).	,, 7	,, 8 30	Per steamer *Lightning*.
Burma	,, 6	,, 7-30	Per B. I. S. N. Co.'s steamer.
Burma, Penang and Singapore.	,, 8	,, 7-30	
Akyab, Kyaukpyu and Sandoway.	,, 8	,, 7-30	
Burma, Tavoy and Mergui ...	,, 10	,, 7-30	
South Africa (Letters) ...	...	,, 7-30	Per steamer from Colombo.
Ditto (Parcels) ...	...	,, 5	
Ditto (Letters), Supplemental.	...	,, 7-30	
Ditto (Parcels), Supplemental.	...	,, 5	
Mauritius, Réunion, Mayotte, and Nossi-Bé.	,, 5	,, 7-30	Per steamer *Ismaila* from Colombo.
Mauritius, Réunion, Mayotte, and Nossi Bé (Supplemental).	,, 6	,, 7-30	
Port Blair	,, 7	,, 7-30	*Vid* Madras.

* Although the date entered in column 2 is, as far as can be calculated, the latest safe date of posting for the next Mail steamer, full allowance being made for the steamer being in advance of her published timing, Mails for the places mentioned in column 1 are despatched daily to Tuticorin, so that they may proceed by any steamer from Colombo that has been unusually accelerated or retarded, or by any special opportunity that may be afforded by a steamer not belonging to one of the regular lines.

† Correspondence for China and Japan is despatched daily to Tuticorin, so that it may proceed by the first steamer from Colombo.

1. The letter-box for Inland articles will be cleared for the forenoon Mails at the following hours:—

For Goalundo, Arakan and Chittagong, at 5-45 A.M.
For Midnapore and Orissa districts, at 9 A.M.
For the Eastern districts, as far as Dacca and Mymensingh, at 6-15 A.M.
For Khulna and Jessore districts, at 7 A.M.
For Bombay, Central Provinces and Midnapore *vid* Bengal-Nagpur Railway, at 11-15 A.M., and with a late fee of ½ anna up to 11-40 A.M.

2. The letter-box will be cleared for the evening Mails at the following hours, viz.—

For the East Indian Railway Loop Mail, at 2-30 P.M., and with a late fee of ½ anna up to 2-55 P.M.
For the Northern Bengal, Darjeeling and Assam Mails, at 3-25 P.M., and with a late fee of ½ anna up to 3-50 P.M.
For the Bombay Mail *vid* Jubbulpore, at 6 P.M., and with a late fee of ½ anna up to 6-30 P.M.
For the Punjab Mail, at 7-30 P.M.
For Midnapore, Orissa, Madras Presidency and Ceylon, at 7-30 P.M.
For the Khulna Mail, at 7-30 P.M.
For the Eastern Bengal Mail, Darjeeling, and places on the Darjeeling-Himalayan Railway, at 7-30 P.M.

and with a late fee of ½ anna up to 8 P.M. and with a late fee of 1 anna up to 8-45 P.M.

3. Late registered letters will be received between the following hours:—

For the Bombay Mail *vid* Jubbulpore, from 5 P.M. to 6-15 P.M.
For the Punjab Mail, from 6 P.M. to 7 P.M.
For the Eastern Bengal Mail, from 6 P.M. to 7 P.M.
For the Khulna Mail from 6 P.M. to 7 P.M.
For Midnapore, Orissa, Madras Presidency and Ceylon from 6 P.M. to 7 P.M.

NOTE.—The late fee on each registered letter will be 2 annas which must be prepaid in stamps on the letter.

4. Articles for Burma and for Port Blair by sea are received without late fee up to 7-30 P.M., and with a late fee of ½ anna up to 8 P.M.

5. On the latest safe day of despatch of Mails for the Australasian Colonies, or any other Foreign Countries, *vid* Madras or Tuticorin, the letter box for Foreign articles will be cleared for the last time at 7-30 P.M., and late letters and papers fully prepaid will be received up to 8-45 P.M.

6. On the day of despatch of the Mail for Europe (Thursday) the letter-box for Foreign articles will be cleared for the last time for articles, without the late fee, at 6-30 P.M., and late letters and papers fully prepaid will be received up to 6-45 P.M. Late registered articles will be received from 5 to 6 P.M. On the day of despatch of any Foreign Mail by sea, the letter-box will be cleared for the last time, without the late fee, up to 8-30 P.M., and late letters and papers up to 9 P.M. The late fee for Foreign articles is 4 annas, which must be prepaid in stamps affixed to the articles.

CALCUTTA G. P. O., } P. J. GORMAN,
The 3rd April 1905. } *Offg. Presidency Postmaster.*

Nadia Rivers.

Report showing the least depths of water for the week ending Friday, the 31st March 1905

Name of River.	Reach of River.	Least depth of water sounded.	Remarks.
		Ft. in.	
Bhagirathi.	Entrance from Ganges	1 9	
	Thence to Geriah	1 7	Momintola.
	From Geriah to Jangipur	1 6	Alampur.
	,, Jangipur to Berhampore	1 0	Gangaprasad.
	,, Berhampore to Katwa	1 0	Bhatchat.
	,, Katwa to Nadia	2 0	Nata-abara.
Bhyrab-Jalangi.	Entrance from Ganges	3 6	
	Thence to Akriganj	3 0	Khamardiar.
	Akriganj to junction of the Bhyrab and Jalangi	3 6	Debotpur.
	Thence to Patkabari	3 6	Goraipur.
	Patkabari to Nadia	3 6	Shahebnagar.
Mathabhanga.	Entrance from Ganges	6 4	
	Thence to Dewanganj	6 4	Jamidpur.
	From Dewanganj to Shikarpur	6 4	Hakara.
	,, Shikarpur to Boalia	1 9	Kharai.
	,, Boalia to Chuadanga	4 6	Shalmari.
	,, Chuadanga to Kingoganj and Hanskhali	4 9	Shibnibash.

Gauge Readings

	Locality.	Date.	Hour.	Height above zero.	Height above mean sea-level.	Remarks.
			A.M.	Ft.	Ft	
Ganges	Sahibganj	1-4-1905	6	0·20	69·20	Fall.
	Rampur Boalia	1-4-1905	Noon	1·00	45·00	Do.
	Entrance of Bhagirathi Geriah	2-4-1905	A.M. 7	4·05	49·45	Do.
	Entrance of Bhairab-Jalangi Akriganj	2-4-1905	7	0·00	38·30	Do.
	Entrance of Mathabhanga	...	...	...	...	...
Bhagirathi.	Jangipur	2-4-1905	A.M. 8	10·25	46·75	Fall.
	Berhampore	3-4-1905	7	2·15	36·20	Do.
	Katwa	30-3-1905	P.M. 5	4·70	19·70	Do.
Jalangi	Krishnagar	31-3-1905	...	0·00	...	...
	Naruppur	1-4-1905	Noon	2 20	2·20	Fall.
Mathabhanga.	Hanskhali	1-4-1905	P.M. 5	4·20	13·00	Do.

A. K. BANERJI, Accountant,
for *Exe. Engr., Nadia Rivers Division.*

Berhampore, the 3rd April 1905.

THE INDIAN LAW REPORTS.

Published in FOUR SERIES, viz.:

CALCUTTA, MADRAS, BOMBAY AND ALLAHABAD.

THE Indian Law Reports, published under the authority of the Governor General in Council, are printed in monthly Parts, which are issued, as soon as possible after the first of each month, at Calcutta, Madras, Bombay and Allahabad, respectively.

The Reports comprise four Series—one for the Calcutta High Court, a second for the Madras High Court, a third for the Bombay High Court, and a fourth for the Allahabad High Court.

The cases heard by the Privy Council on appeal from each High Court are reported in the Series for that High Court. Cases heard by the Privy Council on appeal from Provinces in India not subject to any High Court are reported in the Calcutta Series.

The Calcutta Series is distributed by the Bengal Secretariat Book Depôt; and the Madras, Bombay and Allahabad Series are distributed direct from Madras, Bombay and Allahabad, respectively.

Persons desiring to subscribe for or purchase the Reports should apply to—

the Officer in charge, Bengal Secretariat Book Depôt, Calcutta,
or
the Superintendent, Government Press, Madras, or
the Superintendent, Government Central Press, Bombay, or
the Curator of Government Books, United Provinces of Agra and Oudh, Allahabad.

PRICES.

THE terms of subscription, and the terms on which current issues and back numbers are sold, are as follows:—

	Without postage.	With Indian postage.	With Foreign postage.
COMPLETE SERIES—	Rs. A. P.	Rs. A. P.	Rs. A. P.
Current issues, per annum		22 8 0	28 0 0
Back numbers, per annum	20 0 0	22 8 0	28 0 0
CALCUTTA SERIES—			
Current issues or back numbers, per annum ..	10 0 0	12 8 0	14 0 0
MADRAS, BOMBAY or ALLAHABAD SERIES—			
Current issues or back numbers, per annum ...	6 0 0	7 0 0	8 0 0
ANY MONTHLY PART—			
Calcutta Series	2 0 0	2 0 0	2 0 0
Madras, Bombay or Allahabad Series	1 0 0	1 0 0	1 0 0

All payments must be made in advance. Remittances to Calcutta should be addressed to the TREASURER, BENGAL SECRETARIAT, *Writers' Buildings, Calcutta.*

PARTS OUT OF STOCK AND DUPLICATE COPIES.

WHEN a requisition is received for any set of the Reports, and any Parts are out of stock, the following deduction from the foregoing rates is made for such Parts:—

	Without postage.	With Indian postage.
CALCUTTA SERIES—	Rs. A. P.	Rs. A. P.
All Parts for one year	7 2 6	8 6 2
Any one Part	0 5 9	0 10 3
MADRAS, BOMBAY or ALLAHABAD SERIES—		
All Parts for one year	4 4 6	4 11 3
Any one Part	0 5 3	0 5 9

If any Part is lost in transit to a subscriber, and the fact is reported to the office of distribution within three months from the date of publication, a duplicate will be supplied at the following rate:—

	Without postage.	With Indian postage.
	Rs. A. P.	Rs. A. P.
CALCUTTA SERIES	0 5 9	0 10 3
MADRAS, BOMBAY or ALLAHABAD SERIES	0 5 3	0 5 9

REPRINTS.

THE Complete Series for the years 1876 to 1881, 1883, 1886, 1888, 1890, 1892 to 1895 and 1899 to 1903 has been reprinted, and may be purchased at the Bengal Secretariat Book Depôt, Calcutta, either wholly or in part. All Parts required to complete the stock of the Reports for other years are now being reprinted. Complete Reports from the beginning to date will therefore shortly be available at the Bengal Secretariat Book Depôt.

ADVERTISEMENTS FOR THE CALCUTTA SERIES.

ADVERTISEMENTS of law publications only are received. Rates can be ascertained on application to the Bengal Secretariat Book Depôt.

THE BENGAL LAW REPORTS.

SEVERAL volumes of the Bengal Law Reports, from August 1868 to December 1875, and Full Bench Rulings, Parts I and II, are available at the Bengal Secretariat Book Depôt, Calcutta, at the following rates:—

	Without postage.	With Indian postage.
	Rs. A. P.	Rs. A. P.
BENGAL LAW REPORTS, for one year ...	20 0 0	22 8 0
Single copies, each	2 0 0	2 0 0
FULL BENCH RULINGS Part I and II	10 0 0	22 8 0

Pure Sulphate of Quinine and Sulphate of Cinchonidine.

MANUFACTURED AT THE BENGAL GOVERNMENT CINCHONA PLANTATION.

FROM 1st April 1905 the price of these articles will be as follows:—

Quinine.

1	Pound tin,	Rs. 16,	or, post	free,	Rs.	16-8.
½	,,	,,	,,	8	,,	,,	,,	,,	8-6.
¼	,,	,,	,,	4	,,	,,	,,	,,	4-6.

Cinchonidine.

1	Pound tin,	Rs. 12,	or, post	free,	Rs.	12-8.
½	,,	,,	,,	6	,,	,,	,,	,,	6-6.
¼	,,	,,	,,	3	,,	,,	,,	,,	3-6.

Analysis shows these articles to be of the purest manufacture; and they are guaranteed to be free from wilful admixture with the inferior alkaloids. They are for sale only to Government officers, and only for cash, and may be had from the Superintendent, Botanic Garden, Sibpur, near Calcutta. Cinchonidine can also be purchased by dealers at the following rates:—

1	Pound tin,	Rs. 16,	or, post	free,	Rs.	16-8.
½	,,	,,	,,	8	,,	,,	,,	,,	8-6.
¼	,,	,,	,,	4	,,	,,	,,	,,	4-4.

Cinchona Febrifuge.

Cinchona Febrifuge can be purchased by all Government officers and by any one taking *five pounds* and upwards at a time from the Superintendent, Botanic Garden, Calcutta, at the following rates—per four-ounce tin, Re. 1 ans. 14; per eight-ounce tin, Rs. 3 ans. 12; per pound tin, Rs. 7 ans. 8; the general public can be supplied by the Superintendent, Botanic Garden, *for cash only*, at the undernoted rates—per four-ounce tin, Rs. 2 ans. 4; per eight-ounce tin, Rs. 4 ans. 8; per pound tin, Rs. 9. This medicine is also sold by the principal European and Native druggists in Calcutta. Postage, four annas per four-ounce tin; six annas per eight-ounce tin; and eight annas per pound tin, in addition to the foregoing rates.

THE CALCUTTA GAZETTE.

The 1st March 1901.—From this date the subscription to, and postage for, the *Calcutta Gazette* will be at the following rates, payable in advance:—

PER ANNUM.	For Calcutta.	For the Mufassal including postage.
	Rs. A.	Rs. A.
Entire *Gazette*	15 0	20 0
Parts I, Ia and Ib together ...	5 0	7 8
Part II	1 0	2 12
Parts III, IV and IVA together	4 0	6 0
,, V and VI together ..	2 0	3 0
Appendix (Marine Notifications)	1 0	2 12
Supplement	5 0	7 8
PER ISSUE.		
Entire *Gazette*	0 3	0 10
Supplement	0 4	0 5

N.B.—Separate Parts of each issue of the *Gazette*, and occasionally important Rules and Extracts, can be obtained from the Officer in charge, Bengal Secretariat Book Depôt, at the rate of one anna for every sixteen pages or a fraction thereof. Postage according to weight.

RATES FOR ADVERTISEMENTS in the *Calcutta Gazette*:—

Full page, per issue	Rs. 20
Half ,, ,, ,, ...	,, 10

Casual advertisements, 4 annas per line per insertion.

Parts I, II, and III of a Descriptive Catalogue of the Sanskrit Manuscripts in the Library of the Calcutta Sanskrit College, prepared by Pandit Hrishikesa Sastri and Babu Siva Chandra Gui, M.A., B.L., of said College, are offered to the public for sale. The Catalogue is to be completed in 23 parts, the price of each part being 12 annas a copy, exclusive of postage. Copies can be obtained from the Principal of the Sanskrit College, Calcutta.

GOVERNMENT PUBLICATIONS FOR SALE

At the Bengal Secretariat Book Depôt, Writers' Buildings, Calcutta, and by the following Agents :—

AGENTS IN INDIA.

Messrs Thacker, Spink & Co., Calcutta and Simla.
Messrs. Newman & Co., Calcutta.
Messrs Higginbotham & Co., Madras.
Messrs. Thacker & Co., Ld., Bombay.
Messrs. A. J. Combridge & Co., Bombay.
The Superintendent, American Baptist Mission Press, Rangoon.
Mrs. Radhabai Atmaram Sagoon, Bombay.
Messrs. R. Cambray & Co., Calcutta.
Rai Sahib M. Gulab Singh & Sons, Proprietors of the Mufid-i-am Press, Lahore, Punjab.
Messrs. S. K. Lahiri & Co., Printers and Booksellers, College Street, Calcutta.
Messrs. V. Kalyanarama Iyer & Co., Booksellers, &c., Madras.
Messrs. D. B. Taraporevala, Sons & Co., Booksellers, Bombay.
Messrs. G. A. Nateson & Co., Madras.
Mr. N. B. Mathur, Superintendent, Nazair Kanum Hind Press, Allahabad.
The Calcutta School Book Society.

AGENTS IN ENGLAND.

Mr. E. A. Arnold, 41 and 43 Maddox Street, Bond Street, London, W.
Messrs. Constable & Co., 16 James Street, Hay Market, London, W.
Messrs. Kegan Paul, Trench, Trübner & Co., Charing Cross Road, London.
Mr. B. Alfred Quaritch, 15 Piccadilly, London.
Messrs. P S. King & Son, 2 & 4 Great Smith Street, Westminster, London.
Messrs. H. S. King & Co., 65 Cornhill, London.
Mr. B. H. Blackwell, 50-51, Broad Street Oxford
Messrs. Deighton Bell & Co., Cambridge.

AGENTS ON THE CONTINENT.

Messrs. R. Friedländer & Sohn, Berlin, N. W. Carlstrasse, 11.
Mr. Otto Harrassowitz, Leipzig.
Mr. Karl Hiersemann, Leipzig.
Mr. Ernest Leroux, 28 Rue Bonaparte, Paris.
Mr. Martinus Nijhoff, The Hague.

NOTICE.—Books required for private use can be purchased. Applications should be accompanied by remittance in each case.

All remittances on account of subscriptions to, or prices of, Gazettes, Indian Law Reports or other Government publications available for sale at the Bengal Secretariat Book Depôt, or for cost of advertisements published in the Gazettes should, in future, be made payable to the "Treasurer, Bengal Secretariat, Calcutta." Advices of such remittances, if separately sent, should be addressed to the "Accountant, Bengal Secretariat." All advertisements intended for publication in the *Calcutta* or *Bengali Gazette* should be sent direct to the Superintendent, Government Printing, Bengal.

Books required for the Public Service should be obtained through the Heads of Departments.

The amounts within parentheses are for packing and postage.

NEW PUBLICATIONS ISSUED DURING THE CURRENT QUARTER.

REVENUE DEPARTMENT.

A Monograph on Gold and Silver Work in the Bengal Presidency. By D. N. Mookherjee, Assistant Director, Land Records and Agriculture. F'cap. Paper cover. Re. 1-8. (2s.)

NEW PUBLICATIONS ISSUED BETWEEN 1ST OCTOBER 1904 AND THE 31ST MARCH 1905.

APPOINTMENT DEPARTMENT.

Quarterly Civil List of Bengal corrected up to 1st January 1905. Re. 1. (4s.)

FINANCIAL DEPARTMENT.

Report on the Road and Public Works Cess Operations of the Lower Provinces for the official year 1903-04. F'cap. Paper cover. Re. 1. (2s.)
Report on the Administration of the Excise Department in the Lower Provinces of Bengal for the year 1903-04. F'cap. Paper cover. Re. 1. (2s.)

GENERAL DEPARTMENT.

Report on Inland Emigration during the year ending 30th June 1904. F'cap. Paper cover. As. 8. (1s.)
General Report on Public Instruction in Bengal for 1903-04. F'cap. Paper Re. 1-8-0. (3s.)
List of Officers in the Subordinate Educational Service, Bengal, corrected up to 1st January 1905. As. 8. (1s.)
Bengal Administration Report, 1903-04. F'cap. Cloth. Re. 1. (3s.)

JUDICIAL DEPARTMENT.

Annual Report on the Police Administration of the Town of Calcutta and its suburbs for the year 1903. F'cap. Paper cover. Re. 1. (2s.)

LEGISLATIVE DEPARTMENT.

The Chota Nagpur Landlord and Tenant Procedure Act (Bengal Act I of 1879, modified) with notes by H. W. C. Carnduff. Re. 1-8. (2s.)
Indian Emigration Act (Amendment) (Act XII of 1904) in Bengali, Hindi or Uriya. 6p. (1a.)
The Indian Stamp Act (Act XV of 1904), in Bengali, Hindi or Uriya. 1a. (1s.)
The Local Authorities Loans Act (Act I of 1905) in Bengali or Hindi. 6p. (1a.)
The Indian Universities Validation Act (Act II of 1905) in Bengali or Hindi. 6p. (1a.)
The Stage Carriages Act (Act XVI of 1861), as modified up to 1st February 1898, in Hindi. As 3. (1a.)
The Indian Evidence Act (Act I of 1872) as modified up to 1st November 1902, in Hindi. As. 14 (1s.)
The Indian Explosives Act (Act IV of 1884) as modified up to 1st December 1884 in Hindi. As. 2. (1a.)
The Bengal Tenancy Act (Act VIII of 1885) as modified up to 1st December 1903, in Uriya. Re. 1 (2s.)
The Indian Railway Act (Act IX of 1890) as modified up to 1st May 1896 and corrected up to the 1st December 1903, in Hindi. As. 13. (1s.)

MUNICIPAL DEPARTMENT.

List of qualified Medical Practitioners in Bengal, 1904. Royal 8vo. Boards. Paper cover. Re. 1. (2s.)
Resolution reviewing the working of Municipalities in Bengal during the year 1903-04. F'cap. Paper cover. Re. 1. (2s.)
Resolution reviewing the Reports on the working of District Boards in Bengal during the year 1903-04. F'cap. Paper cover. Re. 1. (1s.)

PUBLIC WORKS DEPARTMENT.

Conditions under which Electric Meters and other instruments will be accepted for testing in the Government Electrical Laboratory, Calcutta, and Table of Fees. F'cap. Paper cover. 1q. (1s.)
Revenue Report of the Government of Bengal, Public Works Department, Irrigation Branch, for the year 1903-04. F'cap. Boards. Paper cover. Re. 2. (3s.)
Classified List and Distribution Return of Establishment of the Public Works Department, Bengal, corrected up to 31st December 1904. Re. 4. (2s.)
Resolution on the Embankment and Drainage Reports of the Government of Bengal, Irrigation Department, for the year 1903-04. F'cap. Boards. Paper cover. Re. 1. (2s.)

REVENUE DEPARTMENT.

Annual Report on the Survey Operations in Bengal during 1903-04 (from October 1903 to September 1904). F'cap. Paper cover. Re. 1. (2s.)
Final Report on the Survey and Settlement Operations in the Saran District, 1893 to 1901, by J. H. Kerr, Esq., Settlement Officer, North Bihar. F'cap. Boards, paper cover. Re. 4-8. (6s.)
Final Report on the Survey and Settlement Operations in the Darbhanga District, 1896 to 1903, by J. H. Kerr, Esq. F'cap. Boards, paper cover. Re. 6. (5s.)
Abstract of the Indian Factories Act, 1881, in sheet form, for hanging up in Factories. In English and Hindi and Urdu As. 4. (1s.) unmounted. Re. 1-4 mounted
Agricultural Statistics of the Lower Provinces of Bengal for 1903-04. F'cap. Paper cover. As. 8. (1s.)
Report on Wards and attached Estates in the Lower Provinces for the year 1903-04. F'cap. Paper cover. Re. 1-8. (2s.)
Report on the Land Revenue Administration of the Lower Provinces for the year 1903-04. F'cap. Paper cover. Re. 3. (2s.)

STATISTICAL DEPARTMENT.

The Trade of Bengal with Nepal, Thibet, Sikkim and Bhutan for the year ending March 1904. Boards. Paper cover. Re. 1-2. (2s.)
Report on the Trade carried by Rail and River in Bengal in the official year 1903-04. F'cap. Board. Paper cover. Re. 4. (5s.)

OLDER PUBLICATIONS.

A General Catalogue of all Government Publications (corrected up to 30th June 1904) may be obtained *gratis* on application to the Officer in charge, Bengal Secretariat Book Depôt

Publications for sale at the office of the Chief Inspector of Explosives with the Government of India.

Rules for the manufacture, possession and sale of explosives issued by each of the Local Governments and Administrations. Price 12s.
Rules for the transport and importation of explosives issued by the Government of India. Price 12s.
Rules for the transport and importation of explosives at the Port of Calcutta. Price 4s.

Publications for sale at the Custom House, Calcutta.

Review of the Maritime Trade of Bengal and its Chief Port (Calcutta) for the year 1903-04. Price Re. 1.
Annual Statement of the Sea-borne Trade and Navigation of Bengal, Foreign and Coasting combined in one volume, for the year 1903-04. Price Rs. 6.
Previous years' volumes can be obtained at the same price.

GOVERNMENT PUBLICATIONS FOR SALE

BY THE SUPERINTENDENT OF GOVERNMENT PRINTING, INDIA, 8 HASTINGS STREET, CALCUTTA.

A General Catalogue of all Government Publications may be obtained gratis from the Government Central Press, Calcutta.

All books published by the Superintendent of Government Printing, India, can be purchased, either directly or through the following or any other booksellers:—

AGENTS IN EUROPE.

Mr. E. Arnold, 41 and 43 Maddox Street, Bond Street, W. London.

Messrs. Constable & Co., 16 James Street, Haymarket, W., London.

Messrs. Kegan Paul, Trench, Trubner & Co., Charing Cross Road, London.

Mr. Bernard Quaritch, 15 Piccadilly, London.

Messrs P. S. King and Son, 2 & 4 Great Smith Street, Westminster.

Messrs. H. S. King & Co., 65 Cornhill, and 9 Pall Mall, London.

Messrs. Grindlay & Co., 54 Parliament Street London, S W., Agents for the sale of the Army List.

Mr. Otto Harrassowitz } Leipzig.
Mr. Karl Hiersemann }

Messrs. R. Friedlander & Sohn, Berlin, W. N. Carlstrasse, 11

Mr. Ernest Leroux, 28 Rue Bonaparte, Paris.

Mr. Martinus Nijhoff, Hague, Holland.

Mr. B. H. Blackwell, 50 & 51 Broad Street, Oxford.

Messrs. Deighton Bell & Co., Cambridge

AGENTS IN INDIA.

Messrs. Thacker, Spink & Co., Calcutta and Simla.

Messrs. Newman & Co., Calcutta.

Messrs. R. Cambray & Co., Calcutta.

Messrs. S. K. Lahiri & Co., Calcutta.

Eveyln, Hubert, & Co.,* 149, Dhurmotollah Street, Calcutta.

Messrs. Higginbotham & Co., Madras.

Messrs. V. Kalyanarama Iyer & Co., Madras.

Messrs. G. A. Natesan & Co., Madras.

Messrs. Thacker & Co., Ld., Bombay.

Messrs. A. J. Combridge & Co., Bombay.

Messrs. D. B. Taraporevala, Sons & Co., Bombay.

Mrs. Radhabai Atmaram Sagoon, Bombay.

Superintendent, American Baptist Mission Press, Rangoon.

Rai Sahib M. Gulab Singh & Sons, Mufid-i-Am Press, Lahore.

Mr. N. B. Mathur, Superintendent, Nasir Kanun Hind Press, Allahabad.

Manager, Educational Book Depots, Nagpur and Jubbulpore.*

Manager of the Imperial Book Depot, 63 Chandny Chauk Street, Delhi.*

Manager, "East Coast News," Vizagapatam.*

Manager, "The Agra Medical Hall and Co-operative Association, Limited" (Successors to A. John & Co., Agra).*

Mr. T. K. Seetharama Aiyar, Kumbakonam.*

Lala Debi Prasad, Vakil and Manager of Law Press, Cawnpore.*

Superintendent, Basel Mission Book and Tract Depository, Mangalore.*

Messrs. P. Varadachary & Co., Madras.*

Mr. Sunder Pandurang, Bombay.*

The Mercantile Mission Branch, Calicut.*

H. Dowman, Esq. (late Extra Assistant Superintendent, Survey of India), Allahabad.*

H Liddell, Esq., Printers, etc., 7, South Road, Allahabad.*

* Agents for sale of the Legislative Department publications.

NOTICE.—Books and Acts required for private use only can be purchased. Applications should be accompanied by a remittance, unless it is wished that the books should be sent by value-payable post, in which case, besides the ordinary postage, an additional charge is made for registration and commission.

Books and Acts required for the public service should be obtained through Local Governments to whom the applicant is subordinate.

Application for Government publications which are no longer in print should be made to the Agents of the particular Government under whose orders they were originally issued.

(The amounts within parentheses are for packing and postage.)

List of New Books published during the Current Quarter

HOME DEPARTMENT.

Scientific Memoirs by Officers of the Medical and Sanitary Departments of the Government of India—Oriental or Delhi Sore by Captain S. P. James, M.B., I.M.S., New series No. 13. Super-Royal 4to. Limp cover. 10a. or 1s. (3a.)

Scientific Memoirs by Officers of the Medical and Sanitary Department of the Government of India—On a parasite found in the White Corpuscles of the blood of dogs by Captain S. P. James, M.B., I.M.S. New series No. 14. Super-Royal 4to. Limp cover 10a. or 1s. (3a.)

Imperial Library List of Additions, Third Series, with subject index, March 1905. No. 7. Super-Royal 4to. Paper cover. 8a. or 9d. (1a.)

REVENUE AND AGRICULTURE DEPARTMENT.

Progress Report of Forest Administrations in the Andamans for 1903 04. Foolscap. Paper cover. 8*a*. or 9*d*. (2*a*.)

COMPTROLLER-GENERAL.

Appropriation Report on the Accounts of the Government of India for 1903-04 by A. F. Cox, Esq. Foolscap. Board. 8*a*. or 9*d*. (6*a*.)

STATISTICAL DEPARTMENT.

Sea-Borne Trade and Navigation Accounts of British India for the month of February 1905. No. 11 of 1904 05. Royal 8vo. Stitched. 8*a*. or 9*d*. (2*a*.)

List of Books published from October 1904 to March 1905.

LEGISLATIVE DEPARTMENT.

The Indian Registration Act, 1877 (III of 1877), as modified up to 1st April, 1900, with footnotes brought down to 1st November, 1902. 11*a*. (2*a*.)

The Indian Emigration Act, 1883 (XXI of 1883), as modified up to 1st December, 1902. 11*a*.

Act XXX of 1852. An Act for the Naturalization of Aliens, as modified up to 1st December, 1902. 2*a*. (1*a*.)

Act V of 1861. The Police Act, 1861. As modified up to 7th March, 1908. 7*a*. 6*p*. (1*a*.)

Act X of 1873. The Indian Oaths Act. As modified up to 1st February, 1903. 3*a*. 9*p*. (1*a*.)

Act XIX of 1883. The Land Improvement Loans Act, 1883. As modified up to 1st February, 1903. 2*a*. 6*p*. (1*a*.)

Act XII of 1884. The Agriculturists' Loans Act, 1884. As modified up to the 15th December, 1896, and with footnotes brought down to the 1st February, 1903. 2*a*. (1*a*.)

Act IX of 1890. The Indian Railways Act, 1890. As modified up to 1st May, 1896, with footnotes brought down to 1st January, 1903. 15*a*. (3*a*.)

Act XXXIV of 1850. The State Prisoners Act, 1850. As modified up to 30th April, 1903. 2*a*. 6*p*. (1*a*.)

Act XXXIV of 1858. The Lunacy (Supreme Courts) Act, 1858. As modified up to 30th April, 1903. 4*a*. 3*p*. (1*a*.)

Act XXXV of 1858. The Lunacy (District Courts) Act, 1858. As modified up to 30th April, 1903. 2*a*. 3*p*. (1*a*.)

Act V of 1873. The Government Savings Banks Act, 1873. As modified up to 1st April, 1903. 3*a*. 6*p*. (1*a*.)

Act II of 1886. The Indian Income Tax Act, 1886. As modified up to 1st April, 1903. 3*a*. (1*a*. 6*p*.)

Act I of 1878. The Opium Act, 1878. As modified up to 1st December, 1896, with footnotes brought down to 1st March, 1903. 5*a*. 6*p*. (1*a*.)

Act III of 1865. The Carriers Act, 1865. As modified up to 31st May, 1903. 3*a*. (1*a*.)

Act IX of 1897. Amending the law relating to Government and other Provident Funds. As modified up to 1st May, 1896, with footnotes brought down to 1st January, 1903. 1*a*. 6*p*. (1*a*.)

Act No. XII of 1855 (Legal Representatives' Suits), as modified up to 1st November, 1904. 1*a* 6*p*. (1*a*.)

Act No. IX of 1860 [Employers and Workmen (Disputes)], as modified up to 1st December, 1904. 1*a*. 6*p*. (1*a*.)

Act No XXI of 1860 (Societies Registration), as modified up to 1st December, 1904. 2*a*. 6*p*. (1*a*.)

The Punjab Laws Act, 1872 (IV of 1872), as modified up to 1st November, 1904. 7*a*. 1*a*. 1*a*.)

The Indian Christian Marriage Act, 1872 (XV of 1872), as modified up to 1st December, 1904. 10*a*. (1*a*.)

Act No. X of 1891 (Indian Penal Code Amendment), as modified up to 1st December 1904 1*a*. (1*a*.)

The Indian Petroleum Act, 1899 (VIII of 1899), as modified up to the 1st December 1904. 7*a*. (1*a*.)

The Indian Extradition Act, 1903 (XV of 1903), as modified up to 1st December, 1904. 5*a*. 6*p*. (1*a*.)

Act V of 1869 The Indian Articles of War, as modified up to 1st December 1904. Royal 8vo. Stitched. Re. 1 2*a*. (3*a*.)

Act XV of 1881. The Indian Factories Act, 1881, as modified up to the 1st December 1904. Royal 8vo. Stitched. 5*a*. 6*p*. (1*a*. 6*p*.)

Act V of 1883. The Indian Merchant Shipping Act, 1883, as modified up to the 1st December, 1904. Royal 8vo. Stitched. 6*a*. (1*a*.)

The Central Provinces Code, 3rd Edition, 1905. Cloth. Super-Royal 8vo. Re. 4 or 6*s*. (6*a*.)

The Bengal Code, Volume I, 3rd Edition, 1905 (Now ready). Cloth. Super-Royal. Price all 5 Volumes Rs. 30 or 45*s*. Vol. I. Re. 8 or 9*s*. (8*a*.)

The Public Gambling Act, 1867 (III of 1867), as modified up to the 1st January, 1905. As. 4 or 5*d*. (1*a*.)

The Indian Contract Act, 1872 (Act IX of 1872), as modified up to the 30th June, 1901. Royal 8vo. Stitched. Re. 1-4*a*. (2*a*.)

HOME DEPARTMENT.

Scientific Memoirs by Officers of the Medical and Sanitary Departments of the Government of India. On a parasite found in persons suffering from enlargement of the spleen in India, by Lieut. S. R. Christophers, M.B., I.M.S., New series. No. 11. Super-Royal 4to. Limp cover. Re. 1 or 2*s*. (3*a*.)

Report on the Administration of Criminal Justice in Lower Provinces of Bengal during the year 1903. Foolscap. Paper cover Re. 1. or 1*s*. 6*d*. (2*a*.)

Imperial Library List of Additions. September to December 1904, Nos. 1–6. Foolscap. Paper cover. As. 3 or 9*d*. (2*a*.) each.

Report on the Administration of Civil Justice in the Lower Provinces of Bengal during the year 1903. Foolscap. Paper cover. Re. 1 or 1*s*. 6*d*. (3*a*.)

Scientific Memoirs by Officers of the Medical and Sanitary Departments of the Government of India on the Morphology, Teratology and Declinism of the Flowers of Cannabis By Major D. Prain, M.B., I.M.S. New series. No. 12. Super-Royal 4to. Limp cover. 14*a*. 1*s*. 4*d*. (3*a*.)

Quarterly List of Officers in the Departments of the Government of India, October to December 1904, January to March 1905. Foolscap. Paper cover As. 4 or 5d. (1s.)

Annual Report of the Sanitary Commissioner with the Government of India, 1903, with Appendices and Returns of sickness and Mortality among European Troops, Native Troops and Prisoners in India for the year. Foolscap. Board. Rs. 3 or 4s. 6d. (8s.)

Report of the Indian Police Commission, 1902-03. Foolscap. Board. With appendices Re. 1-8s. (7s.); without appendices, Re. 1 (6s.)

DEPARTMENT OF REVENUE AND AGRICULTURE.

Report of the Chief Inspector of Mines in India for the year ending 31st December 1903. Foolscap. Board. As. 12 or 1s. 2d. (2s.)

Review of Forest Administration in British India for the year 1902-03. Foolscap. Paper cover. Re. 1-11 or 2s. 6d. (3s.)

Annual Administration Report of the Civil Veterinary Department in India for the official year 1903-04. Foolscap. Paper cover. 12s. or 1s. (2s.)

Records of the Botanical Survey of India, Vol. IV, No. I (An Epitome of the British Indian Species of impatients by Sir J. D. Hooker, G.C.S.I., C.B., F.R.S. Part I. Royal 8vo. Paper cover. 3s or 4d. (1s.)

Records of the Botanical Survey of India, Vol III, No. 2. The vegetation of the districts of Hughli, Howrah and the 24-Parganas, by D. Prain, Esq. Re. 1-12, or 2s. 8d. (3s.)

Rules framed under section 20 of the Indian Mines Act, 1901 (VIII of 1901) prescribing the Compulsory submission of Annual returns of output and labour of Indian Mines. Foolscap. 0-0-6. (1s.)

Rules for the Lease or Sale of Waste Lands in India. 1904 edition. Foolscap. Board. Rs. 4 or 6s. (8s.)

Archæological Survey of India. Annual Report, 1902-03. Super-Royal. Cloth. Rs. 20 or £1 10s. (Re. 1 2s.)

Annual Report of the Board of Scientific Advice for India for the year 1903-04. Foolscap. Paper cover. 6s. or 7d. (2s.)

List of Officers in the Department of Revenue and Agriculture, Government of India, and the Departments subordinate to it, corrected to 1st January 1905. As. 8 or 8d. (2s.)

FOREIGN DEPARTMENT.

Report on the Political Administration of the Territories within the Central India Agency for 1902-03. Foolscap Board. Re. 1 or 1s 6d. (3s.)

Report on the Administration of the Civil and Military Station of Bangalore for the year 1902-03. 8s. or 9d. (2s.)

Report on the Administration of Berar for the year 1902-03. Foolscap. Board. Rs. 2 or 3s. (2s.)

Report on the Administration of the Civil and Military Station of Bangalore for the year 1903-04. Foolscap. Limp cover. 8s. or 9d. (2s.)

FINANCE DEPARTMENT.

Report on the Administration of the Mint at Bombay and Calcutta for the year 1903-04 Foolscap. Paper cover. Re. 1 or 1s. 6d. (3s.)

Statistics Compiled from the Finance and Revenue Accounts of the Government of India. Receipts and Disbursemets of Home and Indian Accounts from 1st April 1895 to 31st March 1903. Foolscap. Board. Rs. 2 or 3s. (2s.)

List of Officers in the Finance and Commerce Department, corrected to 31st October, December 1904, January and February 1905. Royal 8vo. Paper cover. 4s. or 5d. (1s.)

COMPTROLLER-GENERAL.

Finance and Revenue Accounts of the Government of India for the year 1903-04. Foolscap. Board. Re. 2, or 3s. (8s.)

STATISTICAL DEPARTMENT.

Statistics of Cotton Spinning and Weaving in the Indian Mills in June 1904 and in the three months, April to June 1904, compared with the corresponding period of 1902 and 1903. No. 3 of 1904-05. Royal 8vo. Stitched. 2s. or 2d. (1s.) each.

Trade and Navigation Accounts of British India for the months of August, September and October 1904. Nos. 5, 6 and 7 of 1904-05. Royal 8vo. Stitched. 8s. or 9d. (2s.) each.

Accounts of the External Land Trade of British India for the months of June, July and August 1904, Nos. 3, 4 and 5 of 1904-05. Royal 8vo. Stitched. 8s. or 9d. (2s.) each.

Statistics of Cotton Spinning and Weaving in the Indian Mills in July, August, September, October, November, December 1904. Royal 8vo. Stitched. 2s. or 2d. (1s.) each.

Judicial and Administrative Statistics of British India for 1902-03 and preceding years. 8th issue. Foolscap. Board. Rs. 2 or 3s. (10s.)

Accounts of the French Possessions in India in the year ending 31st March 1904 and the four preceding years. Foolscap. Paper cover. 2s. or 2d. (1s.)

Accounts of the Trade of Aden in the year ending 31st March 1904 and the four preceding years. Foolscap. Paper cover. 10s. (1s.)

Area and yield of certain principal crops in India. Sixth issue. Foolscap. Paper cover. 5s. or 6d. (2s.)

Sea-Borne Trade and Navigation Accounts of British India for the months of November, December 1904. January 1905. Nos. 8, 9 and 10 of 1904-05. Royal 8vo. Stitched. 8s. or 9d. (2s.)

Accounts of the External Land Trade of British India for the month of September, October 1904. Nos. 6, 7 and 8 of 1904-05. Royal 8vo. Stitched. 8s. or 9d. (2s.)

Agricultural Statistics of India for the years 1898-99 to 1902-03 in two Volumes. Foolscap. Board. Both Volumes. Rs. 3-8s. or 5s. 3d. (12s.)

Accounts relating to the trade carried by Rail and River in India in the quarter ending June 1904, compared with the corresponding period of the years 1902 and 1903. No. 1 of 1904-05. Foolscap. Paper cover. 8s. or 9d. (3s.)

Financial and Commercial Statistics of British India, II issue, 1904. Super-Royal. Paper cover. Re. 1 or 6s. (12s.)

Tariff Shedules, 1905. Royal 8vo. Stitched. 6s or 7d. (1s.)

Annual Statement of the Coasting Trade and Navigation of British India in the year ending 31st March 1904. Super-Royal. Board. Rs. 2 or 3s. (7s.)

ACCOUNTANT-GENERAL.

History of Services of Gazetted and other Officers serving under the Government of Bengal, corrected to 1st July 1904. In two parts. Royal 8vo. Board. Rs. 5 or 7s. 6d. (12s.)

MILITARY DEPARTMENT.

Return of Wreck and Casualties in Indian Waters, 1902-03. Foolscap. Board. Re. 1 or 1s. 6d. (3s).

Class Hand Books for the Indian Army—Mappillas or Moplahs, by Major P. Holland Pryor. Royal 8vo. Board. Re. 1-4 or 1s. 11d. (3s.)

Hand Book for the Indian Army—Jats, Gujars, and Ahirs, by Major A. H. Bingley. Royal 8vo. Board. Re. 1 or 1s. 6d. (3s.)

Classified List and Distribution Return of the Establishment of the Military Works Services corrected up to 31st December 1904. Royal 8vo. Paper cover. 4s. or 5d. (1s.)

RAILWAY BOARD

Administration Report of the Telegraph Department for 1903-04. Foolscap. Paper cover, 8s. or 9d. (2s.)

Public Works Department Classified List of the Subordinate Establishment, corrected to 30th June 1904. Royal 8vo. Paper cover 4*a.* or 5*d.* (1*a.*)

Public Works Department Classified List and Distribution of Establishment corrected up to 31st December 1904. Super-Royal 8vo. Paper cover. Rs. 2 or 3*s.* (4*a.*)

Selections from the Records of the Government of India in the Pubilc Works Department, No. CCXXXVIII.—Relative Merits of Broad and Metre Gauge Lines of Railway. Foolscap. Board. 4*a.* or 5*d.* (1*a.* 6*p.*)

Classified List of the Subordinate Establishment corrected up to 31st December 1904. Royal 8vo. Paper. 4*a.* or 5*d.* (1*a.*)

List of new books for sale at Thomason College, Roorkee, which were not advertised before.

Roorkee Treatise on "Railways," 4th Edition, revised by F. Wolly Dod, M.C.E. Price, Rs. 3 per copy.

Roorkee Treatise on "Irrigation Work." By Lieutenant-Colonel J. Clibborn, I.S.C., R.A., L.C.E., C.I.E. Price, Rs. 9 per copy.

Roorkee Treatise on "Sanitary Engineering." Compiled by Lieutenant-Colonel J. Clibborn, I.S.C., R.A., L.C.E., C.I.E. Price, Rs. 4-8 per copy.

Roorkee Manual of "Applied Mechanics," Volume II. The stability of structures mostly by graphic methods, by Lieutenant-Colonel J. H. C. Harrison, R.E. Price, Rs. 5-2 per copy.

Roorkee Manual of Hydraulics. Price per copy, Re. 1-4. (No. XIX, Elementary Treatise.) By E. F. Tipple, Esq., B.A.

Designs for Wooden Bridges, together with rules for calculating the area of waterway, etc., and Plates. By late Rai Bahadur Kumbya Lal. Price per set, Rs. 4-2

Pamphlet on Examination for Acid Radicals: Tables giving Analysis of Acids. Price per copy, 8*a.*

Pamphlet on Examination for Acid Bases: Tables giving Analysis of Metallic Bases. Price, 8*a.* per copy.

List of New Books available for sale in the College Book Depôt.

Roorkee Treatise on Civil Engineering, Section XIII. Drawing for Engineer students, Part I. By Major E. H. deV. Atkinson, R.E., Principal, Thomason College, Roorkee. Price per copy Rs. 3-2, including packing, postage, etc.

Hand-Book of the Thomason Engineering College, Roorkee. Illustrated. Price Rs. 6-12 per copy, including packing, postage, etc.

A list of new books and periodicals for sale at the Library of the Asiatic Society of Bengal, 57 Park Street, Calcutta.

SOCIETY'S PUBLICATIONS.

Journal, Part I, Nos. 3 and 4 of 1904, at Rs. 2.
" Part II, Nos. 3 to 5 of 1904, at Rs. 2.
" Part III, Nos. 3 and 4 of 1904, at Rs. 2.
Proceedings Nos. 7 and 8 of 1904, at 8*a.*

BIBLIOTHECA INDICA.

Bhatta Dipika. Vol. I, Fasc. 5, at 6*a.*
Catadusani. Vol. I, Fasc. 2, at 6*a.*
Clokavartika (English). Fasc. 5, at 12*a.*
Catasahasrika Prajnaparamita. Part I, Fasc. 8, at 6*a.*
Caturvarga Cintamani. Vol. V, Fasc., 2, 3, at 6*a.*
Catapatha Brahmana. Vol. III, Fasc. 5, at 6*a.*
Mahabhasyaprodipoddyota. Vol. II, Fasc. 12, at 6*a.*
Nityacara Pradipah. Fasc. 5, at 6*a.*
Sradhya Kriya Kaumudi. Fasc. 6, at 6*a.*
Tantravartika (English). Fasc. 3, at 12*a.*
Vidhana Parijata. Vol. I, Fasc. 6, at 6*a.*

List of Books published by the Meteorological Department during the Current Quarter.

Indan Meteorological Memoirs. Vol. XVI, Part II, by Ir John Eliot. Quarto. Paper cover Rs. 3.

The Calcutta Gazette.

WEDNESDAY, APRIL 5, 1905.

PART IVA.

Proceedings of the Bengal Legislative Council.

GOVERNMENT OF BENGAL.

LEGISLATIVE DEPARTMENT.

Abstract of the Proceedings of the Council of the Lieutenant-Governor of Bengal, assembled under the provisions of the Indian Councils Acts, 1861 and 1892.

The Council met in the Council Chamber on Friday, the 31st March, 1905, at 11 A M.

Present:

The Hon'ble SIR ANDREW FRASER, K.C.S.I., Lieutenant-Governor of Bengal, *presiding.*
The Hon'ble MR. L. HARE, C.I.E.
The Hon'ble MR. K. G. GUPTA.
The Hon'ble MR. B. L. GUPTA.
The Hon'ble MR. E. W. COLLIN.
The Hon'ble MR. R. W. CARLYLE, C.I.E.
The Hon'ble MR. W. A. INGLIS.
The Hon'ble MR. L. P. SHIRRES.
The Hon'ble MR. H. W. C. CARNDUFF, C.I.E.
The Hon'ble MR. R. T. GREER, C.S.I.
The Hon'ble BABU KALI PADA GHOSH, M.A., B.L.
The Hon'ble BABU BHUPENDRA NATH BASU, M.A., B.L.
The Hon'ble BABU SALIGRAM SINGH.
The Hon'ble MR. C. F. LARMOUR.
The Hon'ble MR. A. A. APCAR.
The Hon'ble BABU AMBIKA CHARAN MAZUMDAR.
The Hon'ble MR. J. CHAUDHURI, M.A.
The Hon'ble ASIF KADR SAIYID WASIF ALI MIRZA of Murshidabad.
The Hon'ble RAJA BAN BEHARI KAPUR, C.S.I.

QUESTIONS AND ANSWERS.

THE MANICKNAGAR GHÂT ROAD.

The Hon'ble BABU BHUPENDRA NATH BASU said:—

(*a*) With reference to the replies given to Questions V (*3*) and (*6*) at the Meeting of this Council held on 17th December, 1904, will the Government be pleased to lay on the table the orders of Sir John Woodburn's Government rescinding the resolution of the Municipal Commissioners of Bhadreswar making over the Manicknagar Ghât Road to Messrs. Thomas Duff & Co. in February, 1900, and also the opinion of the Legal Advisers to the Government in the matter?

(*b*) Will the Government be pleased to state if Messrs. Thomas Duff & Co., in their letter dated the 4th December, 1903, to the Government, proposed that either of the two alternative roads, *e.g.*, the Manicknagar Ghât Road or the Paikparah Ghât Road, will suit their purpose? Is it not a fact that the lands on both sides of both these roads belong to Messrs. Thomas Duff & Co.?

(*c*) In the Government Resolution dated the 17th September, 1904, paragraph 4, it is stated that, if the Manicknagar Ghât Road was not given up to Messrs. Thomas Duff & Co., the use of the road by the employés of the Company who have lands on both sides of the road would entirely destroy the privacy of the road and make it unsuitable for its present purpose of access to and from the river for bathing purposes. Would not the same inconvenience arise with regard to the Paikpara Road, which leads to the river and the land on both sides of which also belong to the Company?

(*d*) Is it not the fact that the people of Bhadreswar and its neighbourhood attach special importance to the Manicknagar Ghât Road, which leads to an ancient ghât held in great sanctity by the people and largely used by them, specially on Hindu bathing days and on occasions of other Hindu ceremonials?

The Hon'ble MR. SHIRRES replied:—

"Sir,—The following are the replies to the questions asked by the Hon'ble Member:—

(*a*) A copy of the letter containing the orders of the late Sir John Woodburn has been laid on the table. The legal opinion referred to was given on an unofficial reference and forms part of a succession of office notes. It is not usual to lay such papers on the table, and the Lieutenant Governor sees no reason to depart from the usual procedure in the present case.

(*b*) In the letter referred to Messrs. Duff & Co. said that the closing of one of these roads, preferably the Manicknagar Ghât Road, would enable the Company to lay out a more complete compound, but the offer which Messrs. Duff & Co. made related only to the Manicknagar Ghât Road.

(*c*) The answer to this question is in the affirmative.

(*d*) It is reported that people of Bhadreswar do not attach more importance to the Manicknagar Ghât than to the neighbouring ghâts known as Paikpara Ghât and Mukdam Baksh's Ghât which are equally used by the people on Hindu bathing days and on occasions of Hindu ceremonials. It is also said that no special importance attaches to the Manicknagar Ghât Road by the reason of the fact that it leads to Manicknagar Ghât."

LETTER REFERRED TO IN THE ABOVE ANSWER.

No. 60T.-M., dated Calcutta, the 30th April, 1900.

From—H. L. STEPHENSON, Esq., I.C.S., Under-Secretary to the Government of Bengal, Municipal Department,

To—The Commissioner of the Burdwan Division.

WITH reference to the correspondence ending with your letter No. 298M., dated the 10th—17th April, 1900, I am directed to say that, under section 63 of

the Bengal Municipal Act, 1884, Government confirms the order of the Magistrate of Hooghly, dated the 1st March, 1900, suspending as being in excess of their powers the execution of the resolution of the Commissioners of the Bhadreswar Municipality, passed at their special meeting held on the 11th February, 1900, with reference to the petition of Messrs. T. Duff & Co., regarding the diversion of the Manicknagar Ghât Road, and directs that the said orders continue in force without modification permanently.

THE CASE OF ARZOON KHAN.

The Hon'ble BABU BHUPENDRA NATH BASU asked:—

(*a*) Has the attention of the Government been drawn to a paragraph that appeared in the *Amrita Bazar Patrika*, dated 28th February, 1905, in which Mr. Carey, the District Magistrate of Hooghly, is said to have called for of his own accord the records of the case of one Arzoon Khan, an under-trial prisoner, from the Joint-Magistrate of Serampore, and decided the same himself and made the complainant, one Nassir, pay Rs. 18 for the expenses of the accused?

(*b*) Does the Government think the aforesaid action of the District Magistrate is justified?

The Hon'ble MR. CARNDUFF replied:—

"Sir: The facts appear to be these. Arzoon Khan was a youth who, having been induced to come to Hooghly from Peshawar by his former master, the person referred to as Nassir, desired to return and applied to Nassir for money to enable him to do so. The application was refused; and thereupon Arzoon stole the property of a third person, bought a railway ticket and went to Peshawar, whence he was brought back under arrest on a warrant issued at the instance of the owner of the property stolen. The District Magistrate ascertained these facts in the course of an official visit to the jail, withdrew the case, which he thought a particularly hard one, from the file of the Joint-Magistrate to his own, and, after convicting the accused, verbally directed, not the complainant, as the Hon'ble Member thinks, but Nassir, whom he regarded as responsible for all that had happened, to pay the accused's expenses home. This direction, which was not a judicial order and could not have been enforced, was promptly complied with.

"Under the law, a District Magistrate is competent to transfer, if he thinks fit, any case to his own file from that of a Subordinate Magistrate, and it is not for the Government to consider whether or not Mr. Carey exercised his discretion properly in this instance. For the rest, the Lieutenant-Governor thinks that Mr. Carey's action, though hardly discreet, was obviously prompted by the best of motives, and His Honour observes that the man Nassir apparently acquiesced in Mr. Carey's view of his duty to the boy."

THE CHANNEL THROUGH THE *BIL* BETWEEN THE MADHUMATI AND KUMAR RIVERS.

The Hon'ble BABU BHUPENDRA NATH BASU asked:—

Will the Government be pleased to lay on the table a report of the work done during the last five years, with the amount of money spent in each year, in connection with the opening of the *Bil* route between the *Madhumati* and the *Kumar* in the district of Faridpur, and state in how many years more the work is likely to be completed, and also whether it is intended to make the canal under construction navigable in all seasons of the year?

The Hon'ble MR. INGLIS replied:—

"Sir: Work was commenced on a channel through the *Bil* between the Madhumati and Kumar rivers in March, 1900. Each year since then the channel has been improved during the dry season. A little over eleven lakhs of rupees have been spent in all. The channel is now effective for steamers and boats at the season when the rivers are high. It is intended to deepen the

channel so that it may be effective throughout the year. This may probably take three years to carry out, as it is necessary to procure from England dredging plant of a special design."

THE MOHSIN FUNDS.

The Hon'ble BABU BHUPENDRA NATH BASU asked :—

(*a*) Will the Government be pleased to lay on the table a statement shewing the distribution of the Mohsin Funds under the following heads :—

(*i*) Allotments for Madrassa education (the expenditure of each Madrassa being shown separately).

(*ii*) Allotments for College education, including Collegiate schools.

(*iii*) Allotments for making up the short-fees allowed to the Muhammadan students in Government and private schools.

(*iv*) Allotments for salaries of the Persian teachers and the Arabic Professors employed in Government and private schools and colleges.

(*b*) Will the Government be pleased to frame rules prohibiting the indiscriminate award of the Mohsin Fund aids to Muhammadan students, rich or poor, meritorious or otherwise, and providing for a more judicious distribution, so that only deserving poor Moslem students may receive the benefit of the Fund?

The Hon'ble MR. CARNDUFF replied :—

"Sir,—I lay on the table a statement giving the information asked for by the Hon'ble Member.

"Allotments from the Fund are placed at the disposal of the Principals of Colleges, the Head Masters of Schools or the Secretaries of Associations managing Muhammadan educational institutions, as the case may be, and to these authorities is left the distribution of aid towards the education of deserving, but poor, Muhammadan youths. No instances of the injudicious application of the moneys so distributed have come to the notice of the Director of Public Instruction or the Government of Bengal."

Statement referred to in the above answer.

HEAD OF CHARGES.	BUDGET ESTIMATES FOR— 1902-1903. Rs.	1903-1904. Rs.	1904-1905. Rs.
(1) Allotments for Madrasahs—			
Managed by Government—			
(*i*) Hooghly Madrasah ...	5,068	5,408	5,408
(*ii*) Dacca ,, ...	13,898	14,438	16,250
(*iii*) Chittagong ,, ...	10,604	10,800	11,212
(*iv*) Rajahahi ,, ...	3,416	3,416	3,562
Total for Government Madrasahs ...	32,986(*a*)	34,062(*b*)	36,432(*c*)
Sylhet and other unaided Madrasahs...	2,200	2,238	2,018
(2) Allotments for college education, including collegiate schools (scholarships) ...	8,622	8,622	8,622
(3) Allotments for making up the short fees allowed to the Muhammadan students in Government and private schools* ...	13,350	13,250	10,150
(4) Allotments for salaries of the Persian Teachers and the Arabic Professors employed in Government and private schools and colleges	...	...	...
(5) Miscellaneous	200		...

(*a*) Exclusive of the increase made by Government of Rs. 90 for the pay of a teacher in Chittagong Madrasah.
(*b*) In sanctioning the budget, Government passed Rs. 32,000, including miscellaneous charges.
(*c*) Exclusive of the increase made by Government of Rs. 350 for Sitapur Madrasah and for miscellaneous charges.

* Short fees in Colleges—

	Rs.
1902-03	5,970
1903-04	5,500
1904-05	5,600

Short fees are no longer to be debited to the Mohsin Fund on account of Government Colleges in accordance with the orders of the Accountant-General, Bengal, No. 830T.-M., dated 5th December, 1878.

WAKF ESTATES.

The Hon'ble BABU BHUPENDRA NATH BASU asked:—

(*a*) Is the Government aware of a widespread feeling of dissatisfaction and uneasiness amongst the Muhammadans of Bengal, owing to the danger with which their religious, charitable and educational institutions have been threatened by the recent Privy Council and High Court rulings on the subject of *wakfs*?

(*b*) Is the Government aware that in many instances Mutwallees are treating *wakf* properties as personal properties to the great prejudice of *wakf* institutions, and that monies have been raised in a large number of cases on the security of *wakf* estates?

(*c*) Is the Government aware that numerous educational institutions, such as Madrassas and Mukhtabs, which were the principal means of imparting primary education to Muhammadan boys and were maintained out of the income of *wakf* estates, are now falling into decay or being abolished?

(*d*) In view of the circumstances above referred to, and having regard to the backward condition of education amongst the Muhammadans and the solicitude which the Government has always been pleased to show towards the Muhammadan community in matters of Education, will the Government be pleased to appoint a Committee, consisting of a European President and two Muhammadan members, for the purpose of making the following inquiries, *viz.*—

(*i*) to ascertain the extent to which the recent rulings of the Privy Council and the High Court have affected Muhammadan educational institutions;

(*ii*) to ascertain what funds are still available for these institutions;

(*iii*) to consider whether a special officer of the Education Department should not be deputed to inspect and supervise the Madrassas and Mukhtabs now being maintained out of what are unquestionably *wakf* funds and not falling within the scope of the rulings above referred to; and

(*iv*) to consider if any special legislation is necessary to protect and preserve such funds and carry out the objects of the original endowments.

The Hon'ble MR. CARNDUFF replied:—

"Sir,—In 1894, and again in 1899, the Government was approached by the Central Muhammadan Association on the subject of the judicial rulings referred to by the Hon'ble Member. On each occasion the memorial submitted was considered by both the Government of India and the Government of Bengal, and on the second the Association was informed that a proposal for the settlement in perpetuity of Muhammadan property under the name of *wakf* could not be favourably entertained. The highest judicial authority, namely, the Privy Council, has held that Muhammadan law itself does not countenance the extension of the doctrine of *wakf* so as to admit of the creation of such perpetuities; and an alteration of the law which would enable every Muhammadan to settle his property in the manner proposed would be contrary to the general policy of the Government and, in the opinion of the Government, unsuited to the conditions of the country. The Settled Estates Act, which was passed by this Council two years ago, goes as far in the direction of providing for family settlements as is thought safe.

"By the receipt of the two memorials mentioned above the Government of Bengal has been made aware that it is contended among Muhammadans that the decisions of the High Court and the Privy Council are not in consonance with the Muhammadan law. But the Lieutenant-Governor has perceived no other indication of the existence of the widespread feeling of dissatisfaction and uneasiness, or of the disastrous consequences, alluded to by the Hon'ble Member; and, in the circumstances, His Honour is not prepared to take any such action as is now suggested."

SUB-DEPUTY COLLECTORS.

The Hon'ble BABU BHUPENDRA NATH BASU asked:—

Will the Government be pleased to state what has been done to improve the prospects of Sub-Deputy Collectors for whom a sum of Rs. 70,000 was provided for in the Budget for the current official year?

The Hon'ble MR. CARLYLE replied:—

"Sir,—A letter was received this month from the Government of India sanctioning the following alterations in the Subordinate Civil Service:—

1. The total number of Sub-Deputy Collectors has been increased from 104 to 225.

2. The service has been graded so as to provide regular promotions from grade to grade.

3. A new grade, consisting of 11 appointments on Rs 250, has been created, which will enable Government to reward the services of Sub-Deputy Collectors who have worked satisfactorily, but who are not fit for promotion to the Provincial Service.

4. Sub-Deputy Collectors are to be allowed to count temporary services towards leave and pension from the date on which the three following conditions are fulfilled:—

(1) Two years' continuous temporary service as Sub-Deputy Collector.

(2) The passing of departmental examinations.

(3) The attainment of the age of 20 years."

CIVIL SURGEONCIES FOR ASSISTANT SURGEONS.

The Hon'ble BABU AMBIKA CHARAN MAZUMDAR asked:—

Will the Government be pleased to state whether it is a fact, as stated in the *Bengalee* of the 18th March, 1905, that, although the Government of India, Home Department Resolution Nos. 1084-93, dated the 22nd June, 1899, distinctly laid down that seven Civil Surgeoncies should be reserved for Assistant Surgeons, only four such appointments have actually been granted to them since 1898, and that thus, not only has the Government of India Resolution Nos. 1141-50, dated the 22nd August, 1898, which provided for five such reserved appointments, been not fully carried out, but that the Resolution of 1899, above referred to, has been practically ignored?

If the above facts be correct, will the Government be further pleased to state when the remaining three appointments are likely to be thrown open to Assistant Surgeons?

The Hon'ble MR. SHIRRES replied:—

"Sir,—In the Resolution of the Government of India, No. 1084-93, dated the 22nd June, 1899, it was laid down that seven Civil Surgeoncies in Bengal should be reserved to Civil Assistant Surgeons. It was however at the same time stated that the complete arrangement could not be made at once, but that as occasion offered the districts would be placed in charge of Civil Assistant Surgeons until the maximum number was reached. The appointments which will ultimately be given to Civil Assistant Surgeons are at present held by Uncovenanted Medical Officers, and cannot be given until those officers retire from Government service. There are six Uncovenanted Medical Officers holding districts in Bengal, of whom one will attain the age of 55 years in October, 1910, one in September, 1913, one in February, 1916, two in 1917 and one in 1923. Some of the vacancies which occur must however be given to Military Assistant Surgeons for whom appointments must also, under the orders of the Government of India, be reserved. It is improbable therefore that the remaining three appointments will be thrown open to Assistant Surgeons for some years."

THE SAMBHU NATH PANDIT HOSPITAL.

The Hon'ble BABU AMBICA CHARAN MAZUMDAR asked:—

(*a*) Has the attention of the Government been called to a series of articles which appeared in the *Hitabadi* newspaper of the 4th, 11th, 18th and 25th November, the 2nd and 16th December, 1904, and the 27th January, 1905, alleging serious mismanagement of the Sambhu Nath Pandit Hospital at Bhowanipur and bringing forward grave charges against the Resident Surgeon attached to the said hospital? Will the Government be pleased to inquire whether the complaints and allegations made by the nurses, matrons and patients of the hospital, as reported in the said paper of the 4th, 18th and 25th November, the 2nd December, 1904, and the 27th January, 1905, have any foundation in fact? And, if so, what action has been taken on them by the Inspector-General of Civil Hospitals?

(*b*) Will the Government, in view of the importance of this hospital and in the interest of the public, be further pleased to place the institution on an efficient and satisfactory basis so as to make it thoroughly popular among the subarban population?

The Hon'ble MR. SHIRRES replied:—

"Sir,—In the first half of December the fact that certain statements had been made and repeated regarding the Resident Surgeon of the Sambhu Nath Pundit Hospital at Bhowanipur attracted the notice of Government. It was ascertained that the allegations in question were either wholly unfounded or grossly exaggerated. The Resident Surgeon was specially recommended for the appointment by Major Bird, who was thoroughly satisfied with his work as Resident Surgeon, and Major Harold Browne, who has succeeded Major Bird, is equally well satisfied. The Lieutenant-Governor does not consider it necessary to direct any further enquiry to be made into the matter.

"With reference to the latter part of the question, the following figures show that the popularity of the institution is not declining. The number of indoor patients in each of the five years beginning with 1900 and ending with 1904 was 1,135, 1,225, 1,269, 1,183, and 1,757; the number of outdoor patients was 18,973, 18,978, 19,767, 19,833 and 22,981; and the number of operations was 2,207, 2,449, 2,336, 2,609, and 3,648. The hospital is doing excellent work; and its increasing popularity is manifest."

THE BENGAL FINANCIAL STATEMENT FOR 1905-1906.

The Hon'ble RAJA BAN BEHARI KAPUR said:—"Your Honour, the financial year which closes to-day has been a most extraordinary year. At the commencement we had a very good rainfall which induced most cultivators to bring a larger area than usual under cultivation. The crops throve well and were full of promise, but from the close of September there was no rain to speak of in many places, and for want of rain in October the greater portion of the standing crop withered away. Wherever water was available for the purpose of irrigation, both tenants and zamindars availed themselves of it for saving as much crop as possible, but in many places the crop was destroyed, and where it was partly saved the paddy was husky, *i.e.*, the number of barren grains was very large. Out of about 240 paddy grains ordinarily contained in a stalk of paddy no less than 40 were mere husks. In many fields the tenant did not care to harvest the paddy at all, as he did not think it worth his labour to bring home the stunted stalks that would make bad straw. This was very disappointing to both tenants and zamindars who had to clear up all arrears with the help of full crops. Then again, Sir, we had a most unusually cold weather, and cold-weather crops were more or less blighted by frost, and that is why some short collection was made in February last as mentioned by the Hon'ble the Financial Secretary.

"Bearing all these facts in mind the Budget Statement which is before the Council must be pronounced to be excellent, and I must therefore congratulate Your Honour and the Financial Secretary on such a good Budget even in a year of short crops and deficient collection. The Budget is clear and simple, and at the same time it supplies all the details required to make a Budget comprehensive. It is very fortunate that we live in a province which can so far stand short yield and partial scarcity as to enable its Ruler to pass an average Prosperity Budget.

"I have no desire to take the time of the Council by discussing the Budget allotments in detail as I do not think it at all necessary.

"I should, Sir, however, like very much to know whether the special grant of Rs. 12,00,000, made by the Imperial Government for the improvement of the subordinate staff of the Police Force, would be sufficient to carry out the three objects to which His Excellency the Viceroy has been pleased to give preference, namely, the re-organization of the Military Police Force of the Province, the increase of pay to the constables and head constables and the re-organization of the Sub-Inspectorships. I should be very glad to know if the sum required by your Government for these classes of policemen can be easily supplied, and how much of it will be met from the special grant. If it falls short by a reasonable sum and if it can be met from our savings in any way, I venture to suggest that the required amount be made available from the provincial funds. In previous years a certain sum was successively provided for in the Budget for this very object; but as the Resolution on the Police Commission report was not out and the decision of the Government of India was not known, your Government was unable to use the amount for the purpose.

"I should like to say a few words about the hospitals for paying patients. It is most gratifying to find that a sum of Rs. 2,00,000 has been provided for the construction of 'paying patients' block' in the General Hospital. This, Sir, I am sure would remove a great want in this ever-increasing metropolis. In this connection, Sir, I beg leave to suggest that next year a certain sum may be made available for the construction of a 'paying patients' hospital' for Indian middle class gentlemen I need hardly assure Your Honour that there is actually a great need for some such hospital. The hospital should be built and equipped in the modern style. There are the Mayo Hospital and a few others, but they do not, I have been informed, meet the requirements of the people nor are they sufficient for the ever-increasing demand. Of course it is known to Your Honour that those who utilize these hospital beds are mostly Mufassal patients who come to Calcutta for treatment and cannot afford to take a house and pay for the best medical aid. Most of these people who want to be accommodated in the hospitals cannot get in owing to the limited number of proper hospitals.

"In this connection I must be excused for mentioning that there is some accommodation in the Medical College Hospital and the Campbell Hospital, but patients, I am informed, do not care to go in there if they can help it. The reason ascribed is this:—Both these places are rather teaching institutions than hospitals. The treatment of diseases is utilised for the purposes of instruction, and difficult and complicated cases serve to illustrate text-books and lectures in a manner extremely distasteful to the patients. I have nothing to urge against the working of these most useful hospitals, but I say that the remarks on the nature of diagnosis and prognoses of cases made by the Professors for the benefit of their pupils often prove painful, if not injurious, to the English-knowing patients. For this reason the indoor patients' wards in these two places are not very popular among educated people. Therefore I humbly request Your Honour that if funds be available, Your Honour might be pleased to have a separate 'paying patients' block' built for Indian patients. This, I am sure, Sir, will meet a real want.

"We have a provision of Rs. 70,000 under head 'Medical' for meeting the expenses during the prevalence of plague. The way the plague is increasing and spreading in many districts in Bengal, and is, I am afraid, Sir, likely

to affect the whole country, I think a certain additional sum of money should be set apart to enable us to fight the enemy all along its line of march.

Lastly, Sir, I wish to bring to the notice of Your Honour and the Hon'ble Members of this Council that we should be prepared to meet the partial scarcity which we are going to have for the short crop and failure of crops in some places, especially in parts of the districts of Burdwan and Bankura, though the District Boards now pay for the charitable relief and find funds to provide work for the relief of the people and though they are prepared to spend as much as they can on this most necessary head, yet, Sir, funds at their disposal being of a limited character, should be supplemented from the provincial grants to enable them to carry out most useful works at times. Therefore, Sir, I venture to propose that a certain sum out of the surplus might, with advantage, be set apart to help the most needy districts. It is not my intention to start a scarcity in any way, I am only advocating that if it exists and Your Honour is satisfied that help is needed, we should have sufficient funds to proffer help to the districts that are in need of such help from the Government."

The Hon'ble ASIF KADR SAIYID WASIF ALI MIRZA, of Murshidabad, said:—

"I do not profess to claim any special knowledge of matters financial; still, with Your Honour's permission, I beg to offer a few remarks regarding the Financial Statement for the year 1905-06.

"I desire, in the first place, to offer my sincere congratulations to the Government for what I may call the prosperity budget of the year to come. The closing balance of the current year, being Rs. 1,24,86,000, represents the opening balance of the next year, 1905-06. From different sources, the budget estimate contemplates receipts aggregating Rs. 5,64,33,000; and out of the total amount of Rs. 6,89,19,000, it is proposed to spend Rs. 6,66,70,000, leaving a closing balance of Rs. 82,49,000. I feel grateful and highly appreciate the laudable desire of the Government to spend not only the whole of the expected revenue from different sources during the year, but also a further sum of Rs. 42,37,000 out of the opening balance. This generous intention, I have no doubt, will be duly appreciated by the public.

"A study of the different items of expenditure, as provided in the budget, ought undoubtedly to convince any one, as it has convinced me, of the anxiety which has been shown in taking into consideration all the matters which fall within the scope of administration. Very great care has been taken to make allotments proportionate to the magnitude and importance of the works. I should like to make a few observations with regard to some items of expenditure.

"It is an admitted fact that great ravages are being caused by Malaria, and I venture to think that there would be no violation of truth, if I say that Malaria is annually taking away a larger number of lives than the plague. Malaria has got a firm footing in many districts of Bengal, and it is highly desirable that Government should adopt more effective measures for stamping out Malaria. I am fully alive to the fact that Government has caused enquiries to be made from time to time by experts and specialists at considerable expense. The preventive and remedial measures which have been adopted by Government do not, in my humble opinion, appear to have been sufficient or adequate. The drainage scheme might be successful to a certain extent in riparian areas; but there can hardly be one uniform method for combating with Malaria in different districts of the Province. In my humble opinion, larger amounts ought to be allotted for this purpose and greater attention to be paid to this most important matter than what has been given to it. It is not for me to make any suggestions for improving the sanitation and for coping successfully with Malaria, as I am no expert; but in tracts of lands, urban or suburban, fallow or cultivated, I see swamps, marshes, cesspools, stagnant water-sheets, jungles, filth of all sorts, and water, used for drinking, of the most impure nature, I naturally think that Malaria is attributable to all these things and that Government should take the people into its confidence and ask them to co-operate with it for eradicating Malaria from Bengal.

"I am very glad to find that Government has taken into consideration the just claim of some ministerial officers whose pay ought to be increased. The establishment of the Munsifs is very weak. It is undermanned and the officers are ill paid. It is to be regretted that though a sum of four lakhs of rupees were provided for the improvement of salaries of the ministerial officers, the amount was not spent and has been shown as a saving, owing to the failure to obtain sanction of the schemes before the close of the year."

The Hon'ble MR. CHAUDHURI said:—"Sir, the first point to which I desire to draw attention is as to the New System of Financial Settlement that has been arrived at between our Provincial Government and the Government of India since last year. While it marks in some respects an improvement over the system of Quinquennial Contracts between the Provincial and Imperial Governments, which it has superseded, yet I doubt very much whether it has conferred on us any substantial boon. No doubt, under the new system, we are, in theory, entitled to the advantages of any future expansion of our Provincial Revenue.

"But at the settlement the prospective expansions were so carefully sliced off by reducing our provincial shares that but for the ever-expanding Stamp and Excise revenues, any prospects of improvement in our Provincial finance would be very poor indeed. It gives me a very painful feeling, as it must do to every one who has any feeling for this country, to see the Provincial and Imperial surpluses swelled by the sale of either justice or of liquor. The expansions either in the current or the next year, which may be put down roundly at 5½ lakhs and 6¼ lakhs respectively, are chiefly attributable to expansion in the Stamp and Excise revenues. Of Stamps, the court-fees contribute to the bulk of the expansion. Even those, who ought to know better, often believe and say that this gain to Government proceeds from an innate love of the people for litigation or from a natural rise in their prosperity. But either of these suppositions can be shown from facts and figures to be unfounded. Taking the English and Indian figures ten years back, the English figures show that one in every twenty-four persons is involved in some sort of litigation, while in India, it is about one in every 140. This does not show that the Indians are inordinately fond of litigation.

"But I do not deny that litigation has been on the increase in this country. Referring to the figures for 1903, which was a record year for litigation for those Provinces, the ratio between law suits to population may be put down to one in 110 roughly. Of this increase in litigation the rent suits may be said to contribute the bulk, and 99 *per cent.* of such suits are for arrears of rent. This negatives the theory of prosperity. Money and title suits do not show any abnormal rise in numbers. Of late years some very heavy title suits came to be instituted. Both this and the extraordinary rise in rent suits have contributed to an increase in Stamp revenue. Anyhow, this is not a matter for national congratulation, and in that view I cannot regard a rise in the Stamp revenue from litigation as a sound basis of finance.

"In 1903 the net surplus to Government from civil litigation in these Provinces was Rs 56,36,566. I have not been able to obtain the exact figures for the last year, but I may presume from the financial statement that the gains from such source in 1904 have been even larger. Sir Edward Law admitted the economic soundness of the principle that no profit ought to be made out of administration of justice, but yet tried to find arguments in justification of retaining the surplus. His arguments stand self-condemned, and I have no desire to deal with them here. As it is, the scale of court-fees in this country is higher than it is in any of the Continental countries of Europe and is almost the same as in the United Kingdom. In England the standard of wealth is much higher, the judiciary both of the superior and inferior ranks are much more highly paid and so are also the ministerial and other officers. The net financial result of the receipts and disbursements on account of litigation in

England is a deficit, and not a surplus. But in India, and Bengal specially, if the administration of justice continues to yield such enormous surpluses, a time will come when the scale of court-fees will require a revision.

"We are very thankful to Government for giving us an Additional High Court Judge, and some Short hand Writers on the Original Side; for the proposed additions to the High Court buildings, for the increase in the staff of the Subordinate Executive and Judicial Services, and for the provision made for housing the Munsifs and for the diet money and travelling expenses of witnesses, for allowances to Jurors and Assessors and for the proposal of improving the pay and prospects of Ministerial Officers; but all these will make little difference to the ever-increasing surplus from litigation. A time will come when relief must be given to a people who are being ruined from the costs of litigation. Contemplating such a contingency I cannot regard the surpluses accruing from such sources either as economically sound or morally justifiable. As for any prospective expansion of revenue from Excise on liquor and drugs, the less said the better. Under the $\frac{1}{2}$ and $\frac{7}{16}$ share assigned to us under Stamps and Excise revenues, respectively, our Provincial revenues cannot go on swelling indefinitely, nor is it desirable that it should do so. As for the prospects of expansion under other heads of revenue, they are very remote.

"The solid foundation of our Provincial revenue lies, however, in the land. But land is mostly permanently settled in these Provinces and that is by no means a matter of regret to any class or community. That Settlement serves as a sort of permanent Famine Insurance to our people. The revenue to the Government never fails, and it is the tillers of the soil who get the real benefit of their labour.

"In the Lower Provinces of Bengal, where the crops are not shared between the landlord and the tenant, the former's prospect of any unearned increment is very small and very remote indeed under the present conditions of the Tenancy Law, and the law need not be made unnecessarily stringent. For instance, out of every *bigha* of jute-growing land the tenant can get from Rs. 50 to Rs. 100 a year, and the landlord would thank himself if he can get Rs. 2 out of it as annual rent. Pieces of land yielding more crops than one often carry much lower rent *per bigha* under the Bengal zamindars. Among the many blessings of the Permanent Settlement not the least is, that the Government has never to remit any land revenue and has seldom to launch into schemes of famine relief on any extensive scale. Land is also not very lightly taxed in Bengal, because the Road and the Public Works cesses, the Chaukidari and the Dák taxes all ultimately fall on land. It furnishes all the same the most solid and the most substantial source of revenue in these Provinces from year's end to year's end.

"The Government of India have no just cause of grievance against our land revenue system, especially having regard to the fact that even in the present year of their unprecedented surpluses, they are obliged to budget for a decrease under the general head of land revenue which must refer to other Provinces. But if the Government of India have no real grievance against us on this account, we regret that we cannot say as much of them. The Government of India have for some time past been appropriating three-fourths of our land revenue. The result is, as I have shown, that we have to fall back on such suicidal sources of revenue as Stamp and Excise for our Provincial surpluses. No doubt the Government of India is now giving us liberal doles. But there may be many urgent matters of purely Provincial concern, such as sanitation, water-supply, etc., for which work may have to be undertaken on a large scale and recurring expenditure incurred, but in such matters the Government of India, from a distance, may not feel as strongly as we do.

"In the present state of our finances the Government of Bengal is greatly handicapped in taking any initiative, even in matters which mean life and death to the people of this Province. The present system of granting doles

may be said to be conducive to the bringing of our Local Government to a state of complete financial and administrative subserviency to the Government of India. This Government would, however, be in a much stronger position if a more substantial share of its land revenue were made over to it and some other burdens now recognised as Imperial relieved from its shoulders. I shall indicate them in their appropriate places. The Financial Settlement between the Provincial and Imperial Governments was arrived at a time when the latter did not anticipate such unprecedented surpluses. A time may come, I dare say it will come before long, when the Government of India will be disposed to make a more liberal settlement with us, and in view of such contingency I have ventured to make the above suggestions.

"But apart from all such contingencies, I shall now deal with questions which have long been neglected. It is almost during my lifetime that Bengal has become the hotbed of deadly epidemic diseases. Within my personal recollection many flourishing towns and many more prosperous and thriving villages, nay, almost the whole of rural Bengal, have fallen into the clutches of death. One cannot always rely on personal impressions in such matters. But the last Census Report shows that the normal growth of population in Bengal has got arrested. Even in Bihar, ordinarily considered as one of the healthiest parts of these Provinces, the last Census Report records a woeful tale. In the Patna Division, five out of the seven districts—Patna, Gaya, Shahabad, Saran, Champaran—(with the exception of Muzaffarpur and Darbhanga) all show a decline of popluation. On the top of that, plague has taken a firm hold of these parts and has been doing havoc even in exceptionally healthy districts of Bihar. At the early stage of this unpleasant visitor, Government shared the general scare and seemed disposed to spend some money. But since 1902-03, although the annual death stood at 62,055, the Government spent only Rs. 72,687 out of the Provincial funds on this account which was almost half of what was spent in the previous year and even less than a fourth of what was spent in 1900-01. During 1903 04, although an allotment of Rs. 3,70,000 was made on this account, only Rs. 60,265 was spent out of the Provincial funds and a saving effected of the balance, although the mortality remained almost the same as in the previous year. The Calcutta Corporation had to spend much more during the last three years than was spent out of Provincial funds by Government during the same period.

"The expenditure on this account has, however, been incurred by Government as well as by the Corporation, more in the interest of foreign trade and commerce than out of any concern for the people. This is shown by the fact that although some of the districts in Bihar, such as Saran, have suffered the most, the expenditure there has not been at all proportionate. But as for matters affecting Bihar, I may safely leave them in the able hands of the Hon'ble Babu Saligram Singh. I must admit, however, that plague is not to the same extent a preventible disease as many other epidemic diseases, and any very large expenditure on its account out of the Provincial funds will perhaps not be justifiable. But it may well be assumed all the same that with general sanitary improvements this epidemic disease will also abate in vigour. So I must make known our gratitude for the assignment in the next year's Budget estimate, of Rs. 1,50,000 for water-supply, hospital and drainage, to the Riparian Municipalities—Monghyr, Barisal and Berhampore—and a further grant of Rs. 3,60,000 for water-supply, drainage and for special work to Municipalities, such as Bhagalpur, Rampur Boalia and Rangpur. Let us hope that these grants will be fully and effectively spent and no portion of it will be carried forward to swell the surplus of next year. Such grants would have been impossible but for the lump grant of 50 lakhs made to us at the Financial Settlement with the Government of India last year. It is a matter of satisfaction to us that a portion of the 20½ lakhs that are going to be spent out of it during the next year will be spent for such good purposes.

"But such local or spasmodic expenditure will not make any impression on the malarial fever and cholera which are year after year doing greater havoc amongst

our rural population in Bengal. The Hon'ble the Municipal Secretary at my instance supplied figures to this Council, on the 11th of February last, which showed that between 1900 and 1904, fever alone had carried away, roughly speaking, from 160,000 to 170,000 souls annually during each of the last four years from these Provinces. If this does not rouse our moral responsiblity in respect of rural Bengal, I do not know what will. I have said that a normal rise in the population in Bengal has got arrested. Nay more. What were some of the fairest and most flourshing districts in Bengal when the British Government took over charge of these Provinces, have now been laid desolate by fever and cholera and that within recent years. Nator, Nadia, Murshidabad, Jessore, Dinajpur record fearful mortality from fever. Burdwan has had more than its due share in this general holocaust. I had recent occasion to inquire of our Municipal Secretary as to how some of the districts and important towns, which had shown a decline of popluation at the last Census, have been faring during the last four years. The Hon'ble Mr. Shirres laid a tabular statement on the table which has aroused widespread alarm throughout the Province and beyond. The *Pioneer*, which cannot be said to share any local predilection or prejudices, was also shocked at the figures and described malarial fever as a greater scourge than plague. The Sanitary Commissioner to the Government of India in his recent report said, a regular campaign should be commenced against malarial fever, and the *Pioneer* endorsing his views urged that the campaign should not be confined to jail centres, but carried to the villages in the interior of Bengal. It is a fact that rural Bengal suffers more from this pestilence than big towns in Bengal.

"Thanks to Local Self-Government, in Calcutta and in the head-quarters of districts this type of fever is kept under greater control than in the interior. For instance Calcutta, through sustained efforts for a number of years in the past for the improvement of its drainage and water-supply, has come to record almost the lowest figures from this cause compared to the mufassal towns or rural areas. Taking now some of the districts which are the worst sufferers from cholera and malarial fever, the figures disclose that the fever mortality in the head-quarters is much less than in rural areas. For instance, the town of Jessore which was formerly, perhaps, one of the most unhealthy spots in Bengal, shows in 1904 a death-rate of only 18·3 *per mille*, while the district of Jessore shows 42·46 *per mille* in the same year. The district of Nadia, which was considered as one of the healthiest districts of Bengal, is now unfortunately a greater sufferer from cholera and malarial fever than even Jessore. Still, there too the difference in the rate of town and rural mortality is also marked. While the mortality in this district was 50·09, 40·73, and 39·80 *per mille* in each of the years 1902, 1903 and 1904, the corresponding mortality in Krishnagar town was 37·43, 28·80 and 27 *per mille*.

"But even the district of Nadia is not the worst sufferer in this respect. So far as fever mortality goes, Dinajpur has recently beaten Nadia, and Murshidabad and Chittagong are fresh rivals in the field. Portions of the Rajshahi district which had heretofore escaped notice, disclose also an appalling state of mortality. Nator was a flourishing town at the beginning of the British rule, and its neighbourhood up and down the river Baral was studded with flourishing markets and villages; and it is within my personal knowledge that they are being laid desolate by these fell diseases. I had occasion to visit the Sub-division of Nator only recently, that is, towards the end of the last year, as a member of a Joint-Committee of the District Boards of Pabna and Rajshahi in connection with a drainage scheme. A fearful epidemic of cholera was raging amongst the rural population at the time, and on the top of that I saw the mark of malaria writ large on many a face and physique. But I was loth to go by personal impressions. So, early this month when I inquired about the state of mortality since the last Census in that Sub-division, the figures furnished disclosed that the decline in population in the Sub-division had been more than maintained and that the average rate of mortality had exceeded 40 *per mille* in each of the years 1901, 1902 and 1903, till it reached a climax in the last year when it closed with the unprecedented figure 55·77 *per mille*. The Nator Sub-division and the adjoining portion of the Pabna district, of which

I am an inhabitant, are subject to the same conditions of drainage and water-supply, and I can say from personal experience that the same diseases have laid waste many flourishing villages and markets in the Pabna district.

"I believe I have now furnished sufficient facts and figures selected from wide areas, to convince the Government of the urgent necessity of adopting adequate measures for arresting the shocking state of suffering and mortality amongst the rural population of Bengal. I have laid stress on the facts and figures of the Nadia, Jessore, Rajshahi, and Pabna districts, because I am more intimately acquainted with them. I may mention in passing that the rural areas of the 24-Parganas, Khulna, Hooghly, Burdwan, Murshidabad, Dinajpur, Rangpur, Jalpaiguri, Purnea, Faridpur, and Chittagong are by no means better off. I have shown that towns under Municipal Government and enjoying facilities in respect of good drinking-water and drainage are comparatively immune from malarial fever of a virulent type. The scourge being confined chiefly to rural areas, it is clearly the duty of the Provincial Government to provide the remedy. The remedial measures that I would venture to suggest in this connection relate more specially to the districts with which I am more intimately acquainted, but, I dare say, the principles underlying them will be applicable to all. The supply of good drinking-water and the restoration of natural drainage is the only remedy that can prevent human mortality in rural areas. Much may be done by the restoration of the river system of Bengal, which is not yet past all hopes.

"The river system of Bengal may be said to supply the life-blood of these Provinces. The Ganges may be compared to the main artery that flows through the heart of this Province, and its tributaries and offshoots go in no small degree to contribute to the health, wealth and vitality of these Provinces. It is to the obstruction of the natural flow of the Ganges and Pudma water through the river system of Bengal, that the prevalence of malarial fever and cholera is directly to be attributed. I know, as a matter of fact, that this is the case with the Nator Sub-division and the district of Pabna. The supply of the Pudma water in these parts has ceased within living memory resulting in the abnormal death-rate and general decline of population already referred to. Even now when we get an abundant supply of Pudma water in our parts through the Baral during the three months of the rainy season, we are generally free from fever and other epidemic diseases. But directly the water level in the Pudma falls below the sand-bars and shoals of recent formation at the sources of our rivers and the current of Pudma water is no longer available for drinking purposes, epidemics of cholera and fever make their appearance and go on increasing in intensity as the drinking-water continues to get more and more foul.

"The same is the case in the districts of Murshidabad, Nadia, and Jessore. All these districts are drained by the offshoots of the same river. The unhealthiness of these districts is directly attributable to the cessation of a good flow of water through the Bhagirathi, Jalangi, Mathabhanga, Gorai, and other minor streams. It is a geographical fact that the more important villages in rural Bengal are situated on river sides, and to the pitiable condition of these rivers is to be attributed their present deplorable condition. It is not every country in the world which is blessed with such a magnificent system of rivers. Where they are, the Government devotes no small amount of care, trouble, and capital to preserve and maintain these boons of nature.

"The recent expenditure of capital in the Continental countries of Europe, Egypt, and America on river regulation work is too well-known to require any detailed enumeration here. A few typical instances will suffice:—

AUSTRIA spent £3,000,000 since 1901, over and above £20,000,000 spent during the last half century.

HUNGARY nearly £22,000,000 between 1876 and 1900.

NETHERLANDS spent £11,542,777 on rivers during the last 30 years of the 19th century.

EVEN RUSSIA spent over ¾ of a million sterling in 1903 alone, in river survey and in the building and maintenance of Government dredgers.

"Both in the Continental countries and America either no tolls, or but very little, are levied on river traffic in spite of the heavy expenditure incurred on such accounts. The American view is, that what is spent by the State goes directly to add to the assets of the people in various ways.

"But let us see from our Provincial Budget Statement what we spend on such an important river as the Ganges on this account. Not even Rs. 50,000; the current year's revised figure puts it down at Rs. 48,000 and for the next year the budget estimate is Rs. 46,000. Under the head 'Nadia Rivers' Rs. 1,15,000 has been put down on the debit side, but on the credit side, Rs. 80,000 are budgeted for, and nearly Rs. 90,000 have been actually realised annually during each of the last three years. So in the net result we spend about Rs. 25,000 a year on account of the Nadia rivers.

"Last year there was a mention of a saving effected to the extent of Rs. 3,07,000 owing to the postponement of the project of buying a suction dredger; but in this year's budget any mention of even this dredger is not made. We would have lost all trace of it but for an allusion to it by the Hon'ble Mr. Inglis in reply to my hon'ble friend, Asif Kadr Saiyid Wasif Ali Mirza, in connection with the question of keeping open the channel of the Bhagirathi. The Hon'ble the Public Works Member was pleased to inform us that the dredger was still in suspense, awaiting sanction of the Government of India in connection with the Madaripur and Khulna scheme; that when sanction was obtained and the dredger landed, it would be taken away from its legitimate purpose and carried all the way from Khulna-Madaripur to the source of the Bhagirathi to remove 'the extensive shoals' at the entrance of the Bhagirathi.

"This is an assurance too absurd to soothe even the souls of laymen like us A number of river channels are being continually kept navigable by means of dredgers all over the world, and I thought that such matters had long since passed the experimental stage. That rivers if kept open would prove rivals to the railways, is also an old world notion, which is now dead and gone. On the contrary, such waterways do act as feeder lines to railways is beyond any dispute. Even when a railway runs parallel to a canal it attracts its traffic. When the railway lines intersect the waterways, as they do in Bengal, any improvement in the river traffic is sure to mean so much more revenue to the railways. I would refer the Hon'ble the Public Works Secretary to Major-General Cotton's opinion and to facts as they are in America and in the Continental countries of Europe.

"The gradual dying out of the Bengal rivers is not only disastrous to rural Bengal from the sanitary, but equally so from the economic, point of view. As a matter of fact the cultivators in the interior do not get any benefit out of their *rabi* crop. When they reap this crop in summer the rivers are no longer navigable. The raiyat wants ready cash and cannot wait till the rivers are again in full flood during the rains. The result is, they part with their crops to the *mahajans* and middlemen for a trifle. The latter can well afford to wait till the monsoon flood, when the middleman sells oilseeds and such other staples, which they have gathered through the dry months of summer, to great advantage to himself. The margin of profit in such cases sticks mostly to the fingers of the middleman, and the poor raiyat

is none the better for it. The crop out of which the Bengal *raiyats* get the best fruits of their labour is the jute. And this to no small extent is due to the facilities of river transport to the nearest railways during the rainy season.

"I cannot believe that the Government is at all serious about the much-talked of Jute Bill. I need only say that if any such Bill be passed, it will mean incalculable mischief and oppression to the jute-growing *raiyat*, and the indigo raiyats will tell the Government that even the worm would sometimes turn.

"But apart from the economic importance of the Bengal rivers, their sanitary importance is enough to convince any enlightened Government of the supreme necessity of keeping up a current along them all through the year.

"The Bengal rivers also serve the purpose of so many main drains to the Province. The Hon'ble the Municipal Secretary referred to the connection between rainfall and epidemic diseases in reply to my questions. Rain-water is perhaps the purest water available on earth, and I do not suppose that the Hon'ble Mr. Shirres meant to suggest in any way that it was directly responsible for the growth and spread of epidemic diseases If increase of rainfall corresponded with increase in epidemics, the explanation is obvious. The obstruction of river channels and the natural drainage of the country prevents the accumulated rain-water from being drained off properly. Naturally it stagnates, and in contact with organic and vegetable matter in the soil affords a most congenial medium for the breeding of all kinds of disease germs. The Ganges water however possesses a peculiar property of speedily destroying bacteria. It has been so found by recent scientific researches, and this also corresponds to the accumulated experience of ages of the people of this country. So it is beyond the possibilities of any reasonable doubt that the maintenance of a flow from the Ganges and the Padma along the channels of the Bengal rivers will revolutionise the sanitary conditions of the country through which they may pass. That this can be done by effectual dredging is also obvious.

"But the question is one of expense. Under the present conditions of our Provincial finance we cannot undertake such large schemes. But having regard to the enormous surpluses that are being shown annually in the Financial Statements of the Government of India, I do not see any reason why a fresh settlement should not be made with us to enable us to undertake such schemes of vital importance, economic and sanitary, to this Province. I have suggested the making over of a larger share of our land revenue to us for such purposes.

"If the Government of India would be slow in doing this, I have another suggestion to make. Irrigation has proved a most profitable source of revenue to the Government of India. They are now making nearly 8 *per cent.* on their capital outlay on this account. Irrigation and railways have been made exclusively Imperial sources of revenue. Why then should the Imperial Government leave the bad bargains in the matter of Irrigation to our share? We are ready to work our canals and even keep them in order out of our Provincial funds, but under this head we cannot afford annually to pay Rs. 24½ lakhs as interest on debt. This represents almost the net loss that we suffer from year to year under the head of 'Irrigation.' When the Government of India are making a net profit of 8 *per cent.* on irrigation and 5 *per cent.* on railways, they can well afford to relieve us of this interest. If they wanted equitable reasons for this transfer we need only say that we could furnish much better reasons than is to be found in their argument for appropriating the surplus revenue from the Law Courts in Bengal for their own purposes.

"The Government of India is chiefly responsible for killing our rivers by the canalisation of the Ganges, the Sone and the other tributaries of the sacred river. So the equity is all on our side that the Government of India should come forward to help us out of our present sufferings. Now that the railways

are yielding such enormous profits to the Government of India, and this Province is contributing no small amount to swell such profits, the prayer that I am making on behalf of rural Bengal is certainly not unreasonable. I may also urge that the Bengal rivers being made navigable will go on to swell the profits of the State Railways even to a greater extent. Any capital outlay on that account will not either be a burden on the State or the people. Government is not certainly a commercial concern, and if it makes *5 per cent.* on the railways and 8 *per cent.* on the canals, borrowing money at 3 to 3½ *per cent.*, it should not hesitate to yield up, at any rate, a certain portion of it for the benefit of either those who contribute towards it or for the general good of the community.

"But even regarding the State Railways as purely commercial concerns, I repeat that the revival of the Bengal rivers will go to swell their profits to a sufficient extent to justify the outlay. Besides, the railway embankments are to no small extent responsible for the insanitary condition of Bengal. The views of Raja Digambar Mitter and of other people who have carefully gone into the question must be well known to Government. I need only invite their attention to some new facts. It is a very significant fact indeed that since Dinajpur, Purnea, and Chittagong have become rail-bound, fever mortality has rapidly risen in these parts. So, in undertaking works of railway construction, the State ought to be also more mindful of the sanitary needs of the country.

"In connection with the epidemic diseases, I wish to say a few words with regard to the expenditure under the head of 'Medical' in the Provincial Budget. I regret to find that all the increased expenditure in recent years is either under the head of increase of pay to officers of the Indian Medical Service or in the interest of the Calcutta Hospitals, and that only Rs. 2,000 is budgetted for under the heading 'Expenses during the prevalance of Epidemics.' The Hon'ble Mr. Shirres in reply to my question pointed to the expenses of additions to the Government Cinchona Factory as expenditure under the head of costs incurred on account of malaria. But examining the figures under the head 'Scientific' in the Financial Statement, I find that the Cinchona Plantations annuallly leave a margin of profit to Government. The capital outlay now proposed to be made will surely yield additional profits. Anyhow the sale of quinine cannot be shown as so much expenditure under the head of 'Malarial Fever.'

"It may not be out of place here to mention that while I was at Nator during the outbreak of cholera epidemic, the Sub-divisional Officer was repeatedly appealing to the District Magistrate for medical assistance for the rural areas, but none was available. It is neither the fault of the Sub-divisional nor the District Officer, for when even hospital assistants are not available for such purposes, what could they do? Surely an adequate staff for dealing with periodical outbreaks of epidemic diseases could not be provided for under the budget grant of Rs. 2,000 for the whole Province.

"We are very thankful indeed to the Government of India for the grant of 12½ lakhs of rupees to the District Boards of Bengal and for the assurance that a similar grant will be repeated every year. But considering that this amount is to be divided amongst all the District Boards in this Province, the Hon'ble Mr. Shirres's order on this account seems to be a very large one. I do not know whether the Hon'ble Member in laying the Financial Statement on the table the other day was quite serious when he alluded to the preventible mortality amongst cattle and the duty of the District Boards in this connection. When the Hon'ble the Financial Secretary laid on the table an appalling record of human mortality in Bengal and was

unable to show any expense under the head of remedial measures in respect of such preventible diseases as cholera and malarial fever, his sympathy and concern for the cattle kind of Bengal was truly pathetic, not unmixed with a latent humour which the Hon'ble Member did not perhaps himself see. I am a humble member of my home District Board and we are not unmindful of our duties to even the dumb creatures and do already contribute our quota for the maintenance and travelling of a Civil Veterinary Assistant in our district.

"The Hon'ble Mr. Shirres further desires us to maintain and increase our expenditure on hospitals, dispensaries, schools and education, water-supply and sanitation, and for all these and more he asks us to fall back on our District Board Funds And says he, in times of scarcity also, we must give relief out of Board Funds. Of all persons the Financial and Municipal Secretary ought not to have an exaggerated idea of the District Board Funds. For instance, in the Pabna Board, of which I am a member, the revenue from cess on land, pound, ferry, technical school fees and other miscellaneous sources amount only to close upon a lakh, which with Government contribution for primary education, etc., and contribution from private persons for medical aid, comes up to a little over Rs. 1,12,000. Out of this we spend nearly Rs. 40,000 in education, over Rs. 8,000 for medical and veterinary purposes; subsidise a steamer company to the extent of Rs. 5,000, because there are neither rail nor roads worthy of the name in our district.

"Under the present conditions of the river Gorai the steamer journey may well be said to rival the average speed of a bullock cart, for the steamer sticks to the shoals and remains stationary for a number of hours and sometimes even for days. We are however the proud possessors of a three-mile *pucca* road from the steamer ghat to the town. The roads in the rest of the district are all *kutcha* and we cannot afford to have even *pucca* culverts along them. We have to pay about Rs. 6,000 on general establishment, nearly Rs. 11,000 for an Engineer and his staff. All these account for over Rs. 70,000. We have to maintain a minimum balance of about Rs. 8,000 in our budget estimate, and out of Rs. 33,000 available for Public Works, the maintenance of the *kutcha* roads costs us nearly Rs. 25,500 annually and if any portion of the roads or culverts are washed away during the rains, we are left without any resource for undertaking any new work. This is generally the financial position of most of the District Boards in Bengal. So how can they discharge the sanitary and medical obligations which the Government has failed to discharge out of its Provincial resources? The dole of 12½ lakhs will not go far enough even to improve the district communications. So the Government need not be unusually stringent in any prospective legislation regarding the duties and obligations of the District Boards.

"The Hon'ble the Financial Secretary in referring to the grant of 12 lakhs from the Government of India for the re-organisation of the Police in these Provinces remarked that we would cordially welcome the scheme. While congratulating our President for his endeavours in this connection, I regret I cannot accord a cordial welcome to the resolution on the labours of the Commission as it has emanated from the Government of India. I feel no hesitation in according a welcome to the improvement in the pay and prospects of the Sub-Inspectors. But Rs. 7 to 8 per month as the starting pay of a constable in these Provinces seems to me to be inadequate. When we cannot get a durwan under Rs. 9 or a syce under Rs. 7 how can we expect to get a Policeman, whom I would draw from the former class rather than the latter, on a grass cutter's scale of pay? Nor does the prospect of Re. 1-increase after 3, 10, or 17 years of service seem to me a sufficient inducement to attract a good class of

men into the service; similarly the allowance of 2 annas a day for duty at 'considerable distances' beyond the Police Station seems to be singularly inadequate. In the result, none of these proposals are likely to increase the honesty or integrity of an average constable.

"If corruption, which is the canker that eats into the root of the Police system of the present day, is not removed, most of the money that is proposed to be spent on the so-called Police reform will be thrown away. As regards corruption, the Commission, before whom witnesses were examined, came to the conclusion that it exists in no small degree, and we are prepared to abide by that conclusion rather than accept the academic discourse of the Government of India in this connection.

"In passing I must also observe that the observations of the Government of India regarding the 'physique and temperament' of the people of these Provinces as disqualifications for Police service are equally uncalled for. I need not refer to past records to show that they used to be enlisted both in the Nawab's and the Company's army. Nor need I allude to the athletic possibilities of our present generation of young men to controvert the proposition. The fallacy of the remark is patent on the face of it. The Sub-Inspectors as a class are recruited from amongst our young men and on them fall the brunt of investigation work, and whatever may be their shortcomings in other respects, they have surely not been found wanting in endurance or pluck. The common people are a much sturdier class. The fact is that they are too much occupied with their agricultural work and too much home loving and contended under the system of land tenures in the Lower Provinces of Bengal to aspire for Police service; when their land or its boundaries are interfered with they are known to give a great deal of occupation to the Police, and in any fight outside the Courts of Law the latter are often known to get the worst of it. I need only mention in this connection that the military had to be taken down to quell the Pabna land riots. Still they are a law-abiding people and require only a considerate treatment to be kept in good humour.

"Equally mendacious are the remarks that the people of this country are given to 'the vicious practice of resorting to the machinery of the Criminal Courts in order to gratify private animosities.' No doubt people in these Provinces resort to Criminal Courts to retain or establish possession in land which often change their boundaries with the shifting rivers, but to say that they resort to Criminal Courts to satisfy their private grudge is to assert something which we know is not a fact. To base any such conclusions from the result of the preliminary investigations by the Police is exceedingly fallacious.

"If we examine the statement by the test of trials of the cases sent up by the Police as true, it is the Police whose character is taken away by the facts and figures that are disclosed. We find that the percentage of convictions in such cases during 1903 in these Provinces were 58·2, whereas in England in the corresponding year it was 83·26. This points to the singular inefficiency or perversity of our Police. With regard to cases under the Indian Penal Code it is still lower, being only 42·2 *per cent.* Is it not reasonable therefore to suppose that out of the 20 *per cent.* of the cases disposed of by the Police as false or not-proven even before they came before the Law Courts many a real culprit escapes and in the corresponding number of cases blame is sought to be fastened on innocent shoulders. Hence the large percentage of the cases that are sent up by the Police as true, are declared false or not-proven by the Courts of Law.

"As for the character of our people what better proof can be furnished than that, while 803,394 offences of various kinds were brought before the Law

Courts in England and Wales during 1903, in these Provinces, with a population of almost 2½ times as large as that of England and Wales, hardly 200,000 criminal cases were brought to trial. The percentage of offences against property and other serious crimes also go to corroborate that people of these Provinces are much less given to crime than the masses in countries in an advanced stage of civilization. So the proposals in the Government of India Resolution for strengthening the Police Reserve Force or of increasing the rigour of Police administration are mostly misdirected.

"What is really required for the protection of the people from Police oppression and corruption, is the removal of all Police influence over our Subordinate Judiciary. This can only be done by what is known as the 'Separation of the Executive and Judicial functions.' Eminent Judges of the Privy Council and of the High Courts in India declared in its favour, and at one time the Executive Heads of Government both in this country and in England admitted the soundness of such separation, and only financial difficulties were said to bar the way to this reform. But now when the financial difficulty is gone, the whole scheme is brushed aside with little ceremony. What is now being put forward in its stead by way of Police reform has very little of reform in it, and it will be a wilful waste of public money to run up expenses under this head to Rs. 1,50,00,000.

"The ten lakhs of rupees that have been assigned to us this year under the head of 'Primary Education' is, however, a move in the right direction. But I fail to follow the observation of the Financial Secretary that it would be impossible to devote this sum all at once for its legitimate purposes. I do not see why any substantial portion of it need be spent in brick and mortar. If it is meant for the education of rural Bengal who live in thatched houses, I fail to appreciate why they should be unable to receive their education in thatched bungalows. In the District Boards we have a ready agency for the appropriation of the amount for its proper purposes, and it passes my comprehension why the Financial Secretary should wait at all for the construction of suitable buildings. As for University Education, I shall leave the Hon'ble Member for the University to deal with it.

"In conclusion, I should like to add one word of warning in connection with the question of primary education. It will be a futile attempt in these days of rapid changes and locomotion to forge separate dialects of the Bengali language. I am a native of Northern Bengal and have lived for a considerable length of time in what is described in a recent Government Resolution as Central Bengal. I never knew that there was a separate dialect for each of these parts. In Northern Bengal common people experience no difficulty in understanding the language which we ordinarily speak and write. All the letters to the trades-people and the raiyats are written in ordinary Bengali and they all comprehend them. The proposal now made that the text-book for Primary Schools should be written in English and translated into the colloquial Bengali of the north, south, east and west will only go to create a comic literature for each of the parts concerned. It would be much like the proposal, should the Board of Education in England suddenly take into their head to start the idea, that all the students in the Board's Schools should be taught to drop their their 'h's' and made to speak through their nose, and that text-books should be specially written for the purpose. How such a proposal will be met by the British public, I need not say. But nothing is too absurd for India. The Government has evidently been misled in this matter and I need only add that it will be both a waste of energy, time and money for the Government to create four different dialects for rural Bengal. They might with better advantage employ all their surplus energy and resources to saving rural Bengal from the scourges which, as a member for the mufassal municipalities, I have dealt with at some length."

The Hon'ble BABU AMBIKA CHARAN MAZUMDAR said:—"Sir, from the peculiar constitution of our Councils some people are apt to imagine that the debates which generally take place in them upon the presentation of the annual Budget Estimates are merely academic discussions which end in volleys of blank speeches to which the people have been too long accustomed either to be startled at, or to pay more than a passing attention to them. On the contrary, I regard the yearly discussion of the Budget to be a very important occasion both for the Government as well as for the people. However much we may regret the entirely one-sided picture which a budget now necessarily presents and however much we may lament the absence of a potent voice in the people to give that picture such a shape and form as may reflect even faintly the popular view of it, it must be admitted that it is the occasion when an apparently irresponsible Government renders its yearly accounts to an unaccountable people, and it is the occasion when not only the past progress of the country is reviewed, but also a forecast is taken of its future hopes and aspirations. But more than this it is the only occasion when a beaurocratic Government condescends to lay its policy before the people and when the representatives of the people, such as they are, are allowed to present their views in the hope of at least partially shaping and influencing that policy. It would therefore be a grievous mistake to approach such an occasion without a sense of adequate responsibility on the one hand and with irresponsible light-heartedness on the other. Sir, in in this connection I beg leave to make one observation which I hope will not fail to receive Your Honour's consideration. I am afraid that under the present arrangement very little time is given to Members for the proper study of the budget. Coming, as it must, at the fag end of a busy session it ought, I think, to be placed in the hands of the Members in sufficient time for their preparation. Your Honour, most of your Official Councillors are experts in financial matters; but the Non-official Members of Your Honour's Council, who alone have practically to raise any discussion upon the Budget, cannot be expected to deal with it with equal force and facility unless sufficient time is given to them to study it in all its details and in all its bearings. If Your Honour's Government can, I venture to hope Your Honour's Government will, in future, allow some more time to elapse between its presentation and its discussion. This will also enable the public and the press to judge of its merits and give their views on its details.

"Sir, I use no language of mere convention when I say that I sincerely congratulate the Hon'ble the Financial Secretary upon the very satisfactory Budget which he has been able to present to the Council. It is perhaps one of the largest Budgets which have passed through this Council characterised as it is by large grants from the Imperial Government and marked by two very important changes,—one Administrative and the other Educational. The Budget before us is a lucid document bearing high testimony to the great care, attention and ability displayed in bringing up in its present form. The two statements of recurring and non-recurring expenditure furnish a clear index to the entire Budget. On the one hand, the usual statements show a substantial amount of progress which has been achieved during the year which is just closed, while, on the other, the Budget makes fairly liberal provisions on nearly all heads to inspire hope and confidence of still further progress during the year which we are about to enter. The total revenue under all heads for the year is estimated in round numbers at Rs. 6,89,00,000, and the total expenditure is put at Rs. 6,06,00,000, leaving a closing balance of Rs. 82,49,000 as against Rs. 1,24,00,000 of the current year. This enormous revenue and expenditure, which would be probably beyond the capacity of many Local Governments, are at once proof positive of the strength, of the dignity and of the importance of the administration of which Your Honour is in charge. But, Sir, as there is no sunshine without a cloud, to me it seems this glowing picture of the present Budget is not also without a deep tinge of sadness about it which now looms out in its background. As I contemplate the large figures in this Budget and the lofty spirit of unstinted benevolence which pervades them in their diverse applications, and then as I mentally calculate the serious operation which they must undergo if Bengal is once partitioned, I cannot but feel that we are on

the brink of a very serious experiment. I hope I will not be misunderstood. It is neither in my power nor in my present inclination to draw out Government. I have already tried to do so and failed, and what I have failed to do directly I shall not attempt to do indirectly. Nor am I altogether unmindful of the delicate position in which Your Honour is placed in regard to this unfortunate question, although I must say that it is the honour and credit of Your Honour's Government, more than anything else, which I would still urge on Your Honour's attention until this serious question is either shelved or solved.

"Turning now to the Budget it seems to me that whatever apprehensions might have been felt just twelve months ago as to the probable effect of the financial settlement which this Government had to conclude with the Imperial Government last year, our present estimate of Revenue does not shew that we have been any the loser in the bargain. Under that settlement the revenue which was assigned to us by the Government of India amounted to Rs. 4,98,00,000. And although we were given much smaller shares than under the old contract system in most of the expanding revenues, in the Budget for the current year the total revenue was estimated at Rs. 5,04,00,000; while with the never failing, mysterious elasticity of Indian revenues it rose up to Rs. 5,17,00,000 in the revised estimate; and this has probably encouraged the able Financial Secretary in taking a yet bigger jump and estimate the revenues for the next year at over Rs. 5,64,00,000. Of course it may be still premature to be very sanguine about the advantages of the new system; but, Sir, if the present estimate affords an accurate forecast of the probable results in future years, I am inclined to think there are sufficient grounds for congratulating Government upon its new financial arrangement, which, at all events, possesses one redeeming feature in that it has to a considerable extent relieved the patient lamb of the distressing apprehension of the shearing knife of the wool-gatherer every five years.

"Sir, on going through the several heads on the receipt side of the Budget I am sorry I am unable to congratulate Your Honour's Government upon the steady progress of its Excise revenues. In the Budget for the current year they were estimated at Rs. 72,00,000; in the revised estimate they rose to Rs. 73,00,000, and for the next year they have been estimated at nearly Rs. 76,00,000, and I should not be very much surprised if in the next revised estimate they will shew the same activity towards further expansion as is observable under all the principal heads of the Budget. The average annual increase under this head during the last five years has been Rs. 0,83,000. Our present estimate would shew that we have not hesitated to increase even this enormous average to Rs. 6,50,000, and that perhaps not altogether without the further expectation of having it raised to at least clear 7½ lakhs in the revised estimate. I know it will be said, as has often been said both in this Council as well as in the other Council which guides its destinies and round which it is bound to rotate in its movements, that this expansion of the excise revenues is due to the increased and ever increasing prosperity of the people. Your Honour will pardon me for saying that I regard this as little short of what may be called adding insult to injury. I am not going to rake up here that vexed question of Indian Poverty *versus* Prosperity which has been sufficiently dealt with by far abler men and competent authorities both here as well as in England. But this I will say without hesitation that if increased drunkenness is to be associated with increased prosperity of the people, I do not see why one may not with equal propriety trace increased mortality in this country to overfeeding also. But, Sir, letting quibbling and sophistry alone, there is the high testimony of the Committee, appointed in England in 1904, for the purpose of inquiring into the causes of physical deterioration of the British people. The Committee says:—'Not only is poverty the result of drink, it becomes an active agent in promoting it. People who have not enough food turn to drink to satisfy their cravings and also to support their enfeebled hearts by alcohol,' or as another witness said:—'The poor often drink to get the effects of a good meal. They mistake the feeling of stimulation after alcohol for the feeling of nutrition. They turn to it to blunt their sensibility to squalor, and it re-acts in deadening all desire for improvement.' Sir, if this is the case in England, what should we say of India?

"Your Honour, before leaving the question of Excise I desire to enter my humble protest against the introduction of the contract distillery system now being tried in Orissa and Midnapore and which, as the Hon'ble Member in charge of the Budget very fairly and frankly informed Hon'ble Members in his introductory speech, is likely to replace the outstill system throughout Bengal. I am not in favour of the outstills; but in choosing between two evils I would certainly prefer the outstill to the contract system. If the contract system had shown decrease of consumption, I should still have welcomed it. But as it is, a change of system hardly means anything more than a change of hands in the liquor traffic. The contract system will virtually turn the Indian distillers out of the field, and I do hope the experiment will not be further extended pending, at all events, the settlement of the Excise Law which is now under the consideration of Your Honour's Government.

"Sir, the unusual expansion of the Stamp revenue also calls for more than a passing notice. It seems to be going up by leaps and bounds every year. The average annual increase in revenue from stamps is estimated at Rs. 3,80,000. In the Budget for the current year provision was made for an increment of three lakhs, but in the revised estimate it automatically went up to six lakhs, making a total increment of nine lakhs. Now the Budget in hand at once begins with an increase of seven lakhs to close in probably somewhere between nine and ten lakhs in the next revised estimate. This enormous increase, chiefly under the head of 'Court-fee Stamps,' clearly indicates an abnormal increase in litigation. Here, again, a handful of unfortunate lawyers sometimes come in largely for a share of the responsibility, although it is the Government that goes in for the entire profit. I would like to know what percentage of this large increase of Stamp revenue is due to cases arising out of the Survey and Settlement proceedings lately undertaken by Government in spite of the protests of the people. Let Darbhanga, Patna and Muzaffarpur in Bihar and Backergunge in Bengal answer.

"Sir, the next item of our revenue to which I would invite Your Honour's special attention is No. VIII—the Assessed Taxes. Here, again, there is a steady and perceptible increase along the whole line. From the Budget to the revised estimate, from the revised estimate to the fresh budget is the order of our financial progress in matters of taxation. In the 'ordinary collections' of Income-tax Rs. 42,00,000 represented the 'actuals' of 1903-04; and in the next year (the year in which an important exemption was granted to all incomes below Rs. 1,000) instead of taking a lower estimate, as ought to have been the case if the provision of Act XI of 1903 had been taken into consideration, we find the sanctioned estimate putting this item at Rs. 45,00,000, and although the revised estimate fell short by about 1½ lakhs, we find the Financial Secretary again putting it for the next year at Rs. 44,00,000. I have lately drawn Your Honour's attention to the way in which the valuable concession granted to a poor people by raising the minimum of taxable limit has been systematically tampered with by overzealous officers who would have served their Government much better if they had paid greater regard for the credit and reputation of that Government than for their mistaken efficiency and doubtful advancement. I thankfully acknowledge that immediate notice has been taken of this phenomenal development to which I had the privilege of calling Your Honour's attention, and that the Board of Revenue has called for explanation of the local officers on the subject. I only hope and trust, that as there is nothing in the conduct of man which is not capable of some sort of explanation, neither the Board of Revenue nor Your Honour's Government will allow themselves to be satisfied with any mere apology that may be offered by those who have so wilfully violated the provision of the law and grossly offended the dignity and credit of the Government. But leaving them alone for the present, I would respectfuly ask Your Honour to consider how far it is legitimate or expedient on our part in the face of this state of things to provide for a comparatively higher Revenue from the Income-tax than what it was prior to the passing of Act XI of 1903. A larger provision in our Budget evidently means, if it means anything, a larger expectation on the part of Government, and those who are entrusted with the actual administration are thereby naturally led in

their mistaken zeal to work for the realization of that expectation only. Our Government is not an impecunious Government, and in a matter of this description at all events it can never be under the necessity of promising to the ear and breaking to the hope. I submit the estimate should have been framed with a view to reduction, and not increase, of the Excise Revenue and the Assessed Taxes.

"Coming to the expenditure in the Budget, our attention is at once arrested by the very large provision made for Education. It was Rs. 35,19,000 in the original estimate for the current year which rose to Rs. 35,62,000 in the revised estimate, while in the Budget for the next year it has been raised to Rs. 54,00,000. The steady growth of this revenue from 1901-02 to 1905-06 furnishes unmistakable evidence of the abiding interest which this Government still retains for the education of the people. We may differ as to the mode and method of that education, and we may also complain that it has to some extent lately transferred its long-standing affections from the higher branches of that education; but there can be no gainsaying of the fact that Government is still ready to spend a fair share of its revenues towards the education of the people. It ought to be gratefully noticed that out of this large allotment Rs. 12,00,000 form special grants from the Government of India (Rs. 2,00,000 for University education and Rs. 10,00,000 for primary education). With the large revenue thus placed at his disposal the worthy Financial Secretary has been able to make larger provisions for grants-in-aid as well as for scholarships. I doubt, however, if the increased provision for the former is likely to reach very much beyond the industries in the Government Estate at Kalimpong and the Jewish Girls' School somewhere, while as to the latter I should very much like to know what would be the probable number, nature and quality of the special scholarships which are included in this increased provision. As regards higher education, there is no doubt an increased provision of Rs. 1,50,000 for the equipments of the Arts Colleges; but besides a few minor improvements here and there there seems to be no striking improvement which is sought to be undertaken during the coming year. But I must not be understood either to ignore or to overlook the provision of Rs. 67,000 which has been made for the maintenance of efficient boarding-houses in Calcutta, although in this connection I may be permitted to mention the claims of Dacca, Hooghly, Krishnagar, Rajshahi, Bhagalpur, Patna and Cuttack, where students are not wanting who in want of decent accommodation have to put up in objectionale quarters and sometimes even in objectionable houses. It is also satisfactory to note that for the Government Colleges generally an increased provision of over Rs. 50,000 has been made in the Budget for the next year.

"Before leaving the subject of higher education, I would beg leave to submit one or two suggestions for the consideration of Your Honour's Government. In view of the importance so justly attached to scientific education and having regard to the hopeless inability of the private institutions, which command by far the largest number of students, to meet the requirements of such education, I think it is high time that a central or inter-college laboratory were established in Calcutta either with suitable contributions from those institutions which may be disposed to avail themselves of its advantages, or under a fee system for students who may desire to attend its lectures and demonstrations. Without such an arrangement the best intentions of Government and even the most stringent provisions of the University are likely to be barren of their desired results. The other suggestion which I would urge is the foundation of some chairs for the Calcutta University after the model of the Universities in England. The idea is not a new one, although like all old ideas it suffers from the disadvantage of having been once consigned to the dusts of the upper shelves. We have long moved within the fixed groove of a cramming University, and although loud and repeated have been the complaints raised against it and louder still have blowed the trumpets for its reform, there is as yet no sign of any practical attempt to reclaim the unfortunate institution from its vicious tendencies. Your Honour is the first Rector of this old University, and may I express the hope that Your Honour's first

official connection with it will be marked by the foundation of at least one such chair as the inauguration of a great and useful experiment.

"Coming next to Secondary Education, it has to be noticed with sincere satisfaction that there is a large increase in the provision for the Government schools, general and special, which amounts to nearly a lakh of rupees. The establishment of Training Colleges at Dacca and Hooghly may be taken as the first step towards real effect being given to the new objective method of teaching recently introduced in our high schools. Neither the normal training schools, nor those started at the district and the sub-divisional head-quarters, are likely to turn out competent teachers for the new system, and so long as sufficient number of competent teachers will not be available real education must suffer. In fact I am inclined to think that we have begun rather at the wrong end. We should have first trained teachers before attempting to teach boys; but the simultaneous attempt to teach both can hardly be satisfactory to either. The old staff long wedded to a vicious system have to be weaned from it, and it may be useful to try the experiment of sending for some time a few well trained teachers visiting school to school and testing the method of teaching according to the new scheme. But, Sir, I would attach still greater importance to the strengthening of the staff of assistant teachers in the high schools so as to leave sufficient time at the disposal of the Head Masters for efficiently supervising and occasionally helping the working of the lower forms. Whatever difference of opinion there may be as to vernacular languages being substituted for English as the medium of teaching in these forms, I do think that with the improvements and safeguards indicated above the new scheme is likely to realize the noble expectations of the Government. Sir, I regret to notice the absence of any provision in this Budget for the reorganization of the Educational Services the necessity of which is fully realized by Government and the urgency of which I had the honour of lately pressing on its attention. The indefinite postponement of a measure like this can only result in the increased loss of the educational interest of the country.

"Passing next to the important grant of Rs. 10,00,000 towards Primary Education, I understand the large provision in the Budget is due to the important question of the establishment of rural primary schools in Bengal which is now engaging the attentive consideration of Your Honour's Government and which has been so elaborately formulated in the Government Resolution of the 7th February last. That scheme, as Hon'ble Members are aware, is based upon the educational policy of the Government of India published in March, 1904. But speaking as a humble representative of the people I must say that the scheme as devised by this Government is, at least in one respect, an improvement upon that policy, in that it does recognize to some extent the importance of technical training of the rural population, which was so carefully sought to be eliminated by the Supreme Government. Your Honour's Government has wisely distinguished primary education of the purely rural population from that imparted in urban areas, and has very properly decided to cut down the heavy load of subjects with which boys of tender age have been so long cruelly hampered by a positively mischievous system. I wish Your Honour had extended this pruning hand to secondary education also. The operation in that case might have tended to the proper growth and development of a large number of our boys who now either pine away or miserably break down at an early age. While according my warm support generally to the scheme formulated by Your Honour's Government for the improvement of Primary Education among the rural population, I would strongly protest against the absurd proposal made for supplying its text-books by means of translations from English originals and then again for getting up these translations not in the approved and recognized Bengali language, which is perhaps the richest of Vernacular languages in India, but in queer, uncouth, ungrammatical vulgar dialects (it is hardly accurate to call them even by such a name) which are sometimes spoken in different parts of the province. I should like to know if the Celtic, the Gaelic and the Welsh dialects are employed in any system of Education in any parts of Scotland, Ireland and

Wales? I have never heard of any complaint being made anywhere against the standard Bengali as being unintelligible except to the *Garrhos* and the *Kukis*. On the contrary, this smooth and beautiful language has found its way to the remotest villages, whether in the Gangetic delta or the Brahmaputra Valley, and has been chiefly instrumental in bringing about those social and intellectual developments which are so rapidly taking place in these provinces. Sir, I am grieved to find a distinguished countryman of my own, who ought to have known much better and who sat on the Committee which has devised this novel idea, did not find it worth his while to raise even his solitary voice against it. But sir, what may be game to some may be death to others. The Muhammadans have opposed it, the Hindus have denounced it and the Christian Missionaries, to whom Bengal owes a debt of undying gratitude for the first impetus given to Education in this country, have set their faces against this absurd and violent proposal. I confidently hope that in a matter of this description Your Honour will not hesitate to attach the weight that is due to such a concensus of public opinion, and I fully trust that Your Honour will not allow an excellent scheme for Primary Education in this country to be defeated by a queer and probably mischievous proposal.

"It is satisfactory to note that increased provision has been made for a larger number of officers both as Munsifs as well as Deputy Magistrates and Sub-Deputy Collectors. But I should like to know why the Budget provision for the current year on account of Subordinate Judges could not be fully expended, and what is the reason for the reduction of the provision for District and Sessions Judges in the coming year? The increased provision for 'Supply and Services' will enable Government to deal with the pending questions of allowances to witnesses, etc., satisfactorily; but I regret very much to find a considerable reduction made in the provision for increase of pay of the ministerial establishment. In the current year Rs. 2,50,000 had been provided but not spent, and in the estimate for the next year this has been reduced to Rs. 1,64,000. Sir, these ill-paid and hard-worked officers have a long-standing grievance, and I once again appeal to Your Honour's strong sympathies for an early and adequate redress of that grievance.

"As I have already said, one of the most important administrative changes of the year is the reform of the Police. The long-expected and long-deferred Resolution of the Government of India has at last been published, and this Government has received a grant of Rs. 12,00,000 as its allotment for the purpose. The Hon'ble Member in charge of the Budget has in his opening address most cordially invited us all to welcome the inauguration of the great reforms contained in that Resolution. Sir, I find myself in a somewhat embarrassed position in not being able to accept such a cordial invitation without some reservation. The strength and the pay of the Police have been increased, and to some extent, though not to the fullest extent required, they have also been freed from the direct influence of the Magistracy. There are some other features of the scheme also which will likewise command the approbation of the public. But I feel constrained to say, even at the risk of being held either ungrateful or unmindful, that the creation of a European and an Indian service and the total abolition of competitive examination for the recruitment of Sub-Inspectors I am unable to regard except with doubt and misgiving. It has yet to be seen whether in the superior grades of the service Indians will be eligible for recruitment in England; and so long as no definite announcement is made by Your Honour's Government fixing the standard of educational qualifications for Bengal Sub-Inspectors, and last not least until some practical step is visibly taken to improve the detective function of the Provincial Police, I cannot persuade myself to be in ecstasy over the proposed reforms. As at present advised one thing seems to me to be pretty clear, that the door to District Superintendentships stand practically closed against natives of India. Nothing will give me greater pleasure than to be disabused of these apprehensions. Sir, tender hearts may sometimes break at the disagreeable calculations of racial loss and gain, but it may be no discredit to those whom fortune has favoured with the power and opportunity for making these perplexing calculations at times boldly to face them in bare justice to hearts that are already broken.

"Sir, so long I have simply criticized the Budget, though of course I have endeavoured to do so with as much fairness and frankness as I have been able to command. But I should be very sorry indeed to be understood to say that I am altogether unmindful of the many good points that are in it. To some of these I have already referred, and before I close I ought also to notice with sincere acknowledgment a few others which appear to me as among the most salient points in the clear and on the whole satisfactory Budget which the able Financial Secretary has presented to the Council. The grant of over 4 lakhs of rupees to Municipalities for water-supply and drainage works and the permanent contribution of 12½ lakhs to District Boards with prospective increase of about Rs. 14,000 a year, no less than the large provisions for education as noticed above, command the warm, universal acknowledgment of the grateful people committed to Your Honour's charge."

The Hon'ble MR. APCAR said:—"I am glad to be able again to congratulate the Government on the satisfactory Budget Statement which has been presented to the Council. I would like to say a few words on behalf of the Calcutta Hospital Nurses Institution of which I have the honour to be President.

"In August, 1902, the Government appointed a Committee to manage this Institution which had hitherto been under a Committee of Ladies.

"The Government originally subscribed Rs. 3 for every Re. 1 the Committee collected, subject to a maximum grant of Rs. 37,500, so that if Rs. 12,500 were collected the maximum grant was earned. This arrangement is still in force with the additional proviso that the grant will be increased to Rs. 50,000 in any year that the Committee can collect a similar amount, which means that Rs. 37,500 more have to be collected to earn the additional grant of Rs. 12,500. The Committee have not been able to do this, but upon special request the grant last year was made up to an amount equal to the subscriptions, *viz.*, Rs. 42,651-9 6.

"Since the Committee took charge, the subscriptions collected have been in—

				Rs.	A.	P.
1902	...	...	...	25,819	15	5
1903	...	...	...	42,147	14	6
1904	...	...	...	42,651	9	6

"I quote the following from the Notification of 4th August, 1902:—

It is hoped that, with the appointment of a Committee representing all classes of the community, both European and Indian, a larger increase will be obtained from the public, and that the arrangements, which can be made for the provision of Nurses, will more adequately fulfil the increasing requirements.

"These anticipations have been realised from the European community, as the collections in 1904 amounted to Rs. 42,651-9-6; but I would mention that of this sum only a small proportion, *viz.*, Rs. 1,208 were collected from the Indian community.

"The Institution supplies Nurses to the Medical College Hospital and Nurses and *dhais* to the Eden Hospital; in both these hospitals the majority of cases belong to the Indian community. It is disheartening to the Committee that their efforts appear to be so little appreciated, judging from the small amount of subscriptions to the fund by Native gentlemen.

"There is an ever increasing demand for Nurses and *dhais*. A larger number could be employed did funds permit of it. The Committee of the Institution have applied to the Government for the annual grant for 1905 to be increased to Rs. 50,000. I trust the Government will be able to favourably consider this application and grant the increase.

"The accounts of the Institution show that the expenses have exceeded the collections by about Rs. 2,000 in each of the years 1903 and 1904, provided the grant from the Government again equals the amount of collections. This deficiency has been provided from the capital, but a steady drain on this fund will eventually compel the Committee to curtail the supply of the much needed Nurses.

"The Hospital Port Dues Fund shows a balance at credit of that fund on the 30th April, 1904, of Rs. 2,92,700-5-4. In the items of expenditure there is an item of Rs. 20,254, paid for charges for seamen in Presidency General Hospital, which all goes to the funds of the hospital. These patients are attended by the Nurses supplied and paid by the Calcutta Hospital Nurses Institution, but no portion of these charges is allotted to the Institution. I submit for the consideration of the Government that a small charge payable by the Hospital Port Dues Fund should be made for the services of the Nurses at all hospitals, where such Nurses attend as are paid by the Institution, and that the amount be paid to the Institution.

"A representation has been made to the Government by European and Indian rice merchants using Tolly's Nullah; it has been supported by the Chamber of Commerce, calling attention to the fact that for several days in the month boats cannot use this nullah on account of the silt which has accummulated there rendering it impossible for boats to float or use the nullah. The rice trade from Chetla is an important item of the trade of this port; capital has been invested in godowns and appliances along the banks of this nullah which is threatened to be closed from want of water for navigation of the boats. I submit for the consideration of the Government that immediate steps should be taken to remedy this hindrance to the rice trade, and that an allotment be made for that purpose.

"I am aware the canalization of Tolly's Nullah is included in a larger scheme for the improvement of waterways, but this danger is pressing and I venture to call Your Honour's immediate attention to it."

The Hon'ble MR. LARMOUR said:—"The Financial Statement which we are asked to-day to consider shows evidence of the prudence and forethought which have guided those in whose hands is entrusted the administration of the finances of this Province, and on behalf of that section of the community which I represent I beg to tender to Your Honour and the Government our congratulations on the very satisfactory results which have been attained. We rejoice in the very substantial state of prosperity which is evinced by the budget, and we view with sentiments of pleasure the large balance at the disposal of the Government which we may safely conclude will be utilized for the further benefit of the Province both as regards the servants of the Government and the public generally.

"To traverse the whole budget would necessitate a minute knowledge of financial and administrative details which I do not claim to possess; but with Your Honour's permission I would refer to a few points in the hope that in the near future, when opportunity permits, they may receive favourable attention from the Government.

"Provision is made in the budget for a grant of over four lakhs for the improvement of the Port of Chittagong. To this grant, as matters stand, there can be no possible objection, though it may be presumed that in the event of that port being separated from Bengal all grants made to it by the Government of this Province will be refunded by the Government to which it will be transferred. In this connection I would ask Your Honour whether it would not be possible, out of the large surplus at the disposal of Government, to afford some relief to the Port of Calcutta on account of the heavy burden of the Kidderpore Docks. Such relief would be of considerable benefit to, and would be much appreciated by, the trade of the port. At present the Port Trust pays Government 4 *per cent.* interest on the Dock Loan of Rs. 287 lakhs. If this interest could be reduced to 3½ *per cent.*, the rate at which Government itself can borrow money, it would mean a saving of a lakh and forty-three thousand in the year. It is well-known that the Docks hardly pay their working expenses apart from interest and sinking fund which together amount to about 15 lakhs a year. This burden, therefore, has to be borne by the general revenues of the port.

"I have been reminded this morning by the Hon'ble Mr. Inglis that this question was the subject of correspondence between the Port Commissioners and the Government in 1895-96, and at that time the Government declined to

reduce the rate of interest. But I do not suppose that the decision then arrived at partook of the nature of a law of the Medes and Persians which altereth not. At that time the reduction of the rate of interest on Government Promissory Notes from 4 to 3½ *per cent.* had only been newly introduced and was, if it may be so described, in the experimental stage. It is no longer an experiment, but an established fact. The rate is never likely to revert to 4 *per cent.*: on the contrary, it is more likely to be further reduced to 3 *per cent.* When the loan was made to the Port Trust the rate on Government loans was 4 *per cent.*, and it is evidence of the intention on the part of the Government not to make a profit on the transaction that it should have lent the money to the Port Trust at the same rate. Acting on this principle, therefore, there is no real reason why the interest should not now be reduced to the Government standard of 3½ *per cent.*

"I have heard it also advanced that the Port Trust is prosperous and there is no need for the reduction. This is scarcely a proper argument, for if we admit the claim that the interest should be reduced, then we put the Port Trust in the position of a creditor and the Government in the position of a debtor, and it is no valid plea that the debtor should refuse to pay the creditor because the latter is prosperous. There may be other reasons for refusing the reduction, but the fact of the Port Trust being prosperous cannot be advanced as one.

"The reduction of this interest would largely increase the borrowing powers of the Port Commissioners and so enable them to carry out important works the cost of which must be debited to capital and cannot be paid for out of revenue.

"Would it not also be permissible for this Government to add a substantial amount to the sum of fifty lakhs allowed by the Imperial Government toward the City Improvement Scheme? We, residents of Calcutta, fully recognize the principle that, if we want our city cleansed and beautified, we should be prepared to share the expense of the cleansing and beautifying process; but we hope for such help as will enable us to bear the extra burden without making the cost of existence too great for us, more especially for those who are in receipt of fixed salaries, but who find expenses continually increasing.

"I note that in the budget provision is made for the housing of Government officials, and I trust this will include some sort of living accommodation for the poorer class of Government clerks to whom it is a serious problem to find suitable quarters in the face of ever rising rents.

"Apparently for the first time after many years a very liberal grant has been made for Primary Education. May I venture to hope that, as no details are given as to how it is proposed to apportion this grant, some portion of it may be used for what, for want of a better appellation, I may call 'Primary Technical Education'? Technical Education has had substantial encouragement and support from Government for many years, and the results have been of marked benefit to a large number of young men whose training thus gained has enabled them to adopt professions of usefulness and profit. As a further step in this direction, Your Honour has recently introduced a system of Commercial Education, and I have no doubt that the opportunity will be taken full advantage of by young men who contemplate a business career, for with the foundations thus laid at schools and colleges they will find themselves prepared beforehand for the work that lies before them as clerks, book-keepers or accountants. Technical Education, therefore, has been dealt with in no niggardly spirit by the Government.

"But there is one class for whom apparently little has been done, the class who have to depend upon their hands to earn their livelihood, to whom training schools, engineering colleges and commercial classes are things unknown, or, if known, unattainable; whose education is of the most meagre description and whose training for the particular handicraft which they may adopt seems to be picked up anyhow and anywhere without any method or recognized system. It is on behalf of this class, the large class of artizans and

handicraftsmen, that I would beg some assistance from Your Honour. Some years ago a Commission was appointed by Government to enquire into this subject, and in response to an enquiry I received from the Secretary of that Commission I communicated my views at some length. I never heard the result of that Commission, or whether any definite conclusion was arrived at.

"I trust I may be pardoned if, on this point, I confine myself principally to the industry with which I am personally connected and in which I have had a continuous experience of over thirty-six years; but I have little doubt that employers in other branches of manufacturing industries would confirm what I say. Something is done in Reformatory Schools to teach young boys a trade. Apprentices are, I believe, taken in at the dockyards and telegraph works. But more than this is necessary. It is hardly advisable or desirable that boys should transgress the law in order to be taught a trade, and the other sources of training are open only to a few. What is wanted is that boys who are willing to learn a trade should have the opportunity afforded them of learning it in a methodical and systematic manner. Private concerns can and do afford a certain amount of training, but they are comparatively few in number and are in many cases out of the reach of the would-be handicraftsman. As it is at present, the large majority of youths pick up a knowledge of their craft as best they can, with the result that their workmanship is of a very low order, rendering them unfit to compete with others whose systems of training are better and more methodical.

"As an example, I would here mention a well-known fact, that Chinamen are gradually but surely supplanting natives as wood-workers. Whatever their system of training may be, it is not to be denied that their workmanship is superior in every way to that of the native, and I cannot accept it that this is due to any superiority of intelligence; for granting equality of conditions and training the native artizan can, when properly looked after, do his work as intelligently and skilfully as his Chinese competitor. But it is just that training that is lacking, and it is in this direction that I would solicit the help of the Government. I acknowledge that there are difficulties in the way, but those difficulties are not unsurmountable. They have existed in other branches of technical education and have been successfully overcome. We must recognize the general poverty of the class, the early age at which a boy must begin his training, the inability and possibly unwillingness of parents to send their boys to any established training institution, the inadvisability of insisting on educational tests which would be of little or no value to the man who has to earn his living by the work of his hands, and with these principles to guide us I feel sure that something could eventually be done to benefit and improve the position of the artizan classes of this Province.

"This Council has lately passed a law which will be very much to the benefit of Calcutta, I mean the Smoke-Nuisances Act. We have heard on many sides that the best prevention of the smoke-nuisance is to procure better stokers. At present we take an untrained coolie and tell him to shovel coal into a furnace. To him the fact that thick black smoke belches forth from the chimney is only evidence that he is zealously carrying out his orders to throw coal on the fire, and he is happy in consequence and proceeds to add more coal thereby causing more smoke. To talk to him about scientific stoking would be futile, and to tell him that the coal must be so distributed that there shall be little or no smoke would, to his mind, be an insult to his intelligence. Let the coolie however be trained before he is allowed to stoke, let him understand from the first that dense smoke only means imperfect combustion, let him learn that the less smoke he makes the more money he will get, and his endeavours thereafter will be confined to lesson rather than to increase the volume of smoke. But at present he has no one to teach him. All he has to do is to shovel coal and that he does to the best of his ability causing loss to his employers, inconvenience to his neighbours and earning less money for himself.

"I would take this opportunity of thanking Your Honour for the generous donation which has been provided for towards the paying patients' wards of

the General Hospital. This will be a matter for much satisfaction and congratulation to those who have striven so long and so earnestly for that admirable institution. It is hardly necessary for me to take up the time of the Council by dilating on its benefits and merits. I can only assure Your Honour that the boon is one which will be thoroughly appreciated by those who have the misfortune to be inmates of the hospital, and that you, Sir, will have earned the heartfelt gratitude of all sections of the European community in Bengal."

The Hon'ble BABU SALIGRAM SINGH said:—"I congratulate the Hon'ble Member in charge for having placed a good budget before us, and it is satisfactory to find that the financial condition of the Government of Bengal is sound and prosperous. In passing, I may here remark that the misapprehension under which some Hon'ble Members laboured last year as to the effect of the new financial settlement with the Government of India on the finances of Bengal must be by this time removed for good. I desire to offer a few remarks on the details of the budget.

"While commenting on the favourable financial position of the Government of Bengal during the year, the Hon'ble Member in charge of the budget admits that this is largely due to an unusual expansion of the stamp duty chiefly under the head of 'Court-Fee-stamps.' This, I am afraid, is not altogether a matter for congratulation, for an expansion of revenue chiefly under the head of Court-Fee-stamps undoubtedly means an increase in litigation. But at the same time I am bound to say that, with increased receipts from Stamps, the Government is not unmindful of the demands of Law and Justice for increased expenditure with a view to greater efficiency. This is evidenced—(*a*) by the provision made in the budget for an Additional Judge of the High Court, who I hope will be made permanent; (*b*) by a larger expenditure under fees to Pleaders; (*c*) by larger grants under salaries and establishment to Munsifs, diet and travelling expenses to witnesses and allowances to Jurors and Assessors; (*d*) by the proposed extension of the High Court buildings; (*e*) by the provision for the erection of Munsifs' Courts and Munsifs' private residences in different places and by other items; and I hope that such expenditure will be an ever-increasing factor in all future budgets.

"It is satisfactory to find that in the Budget Estimate for 1905-06, a sum of Rs. 2,85,000 has been set apart for an increase in the number of Deputy Magistrates and Deputy Collectors and the re-organisation of the Subordinate Executive Service. I do not know what the scheme is for the re-organisation of the Subordinate Executive Service, but no scheme will be satisfactory that does not include an increase in the initial pay of the 4th grade Sub-Deputy Collectors. As at present these officers commence with an initial pay of Rs. 100 *per mensem*, and this sum is altogether inadequate to support them, consistently with the style and dignity they have got to maintain. It must be remembered that these officers are drawn from the same class of men as Deputy Collectors, that in the majority of cases they possess the same educational qualifications, and that they are employed to discharge the same judicial and revenue work. It is therefore reasonable that they should begin with about the same pay as Deputy Magistrates, and I think it will be conceded that Rs. 150 a month will not be a too large sum for them to begin with. I trust my remarks will be kept in sight when the scheme for the re-organisation of the Sub-Executive Service is finally formulated.

"I see that a sum of Rs. 20,000 is provided in the budget for the re-organisation of the Registration Department. I do not know whether the re-organisation contemplated includes the placing of Rural Sub-Registrars on the permanent list and their being graded and paid salaries instead of commission. The Government of Bengal had some such scheme under their contemplation, and I should like to know whether by the proposed re-organisation of the department effect is to be given to this scheme, although the sum allotted for the re-organisation, in my opinion, would scarcely appear adequate enough for the purposes of such a scheme. If the re-organisation meant does not contemplate this, then I should respectfully like to submit that, the sooner attention is drawn to this matter, the better.

"It is a matter of regret that the Government of Bengal has not found it possible to utilise the grant that was sanctioned last year for improvement in the pay and prospects of the hard-worked Ministerial Officers. In reply to an interpellation in the Bengal Council some time ago we were given to understand that the scheme had not received the sanction of the Government of India, and the same reason is also put forward in the budget itself. But I trust that, before the time comes round for the presentation of the next budget, the Government of Bengal would be ready with the scheme in order to be able to make provision for it next year.

"I find that the estimates provide Rs. 70,000 for expenses during the prevalence of Plague, including a special grant of Rs. 50,000 to the Divisional Commissioners for special plague measures. While I am bound to say that in the past the Government has not been unmindful of the troubles and sufferings of the large plague-striken population, especially in the districts of Bihar where the ravages of plague are most keenly felt, it strikes me that the sum provided this year must be somewhat inadequate to the requirements of the case, and I would respectfully press that the Government should give a larger grant for this purpose, even at this stage, if it is practicable to do so. This is a matter in which the Government ought to be generous.

"I also find that a sum of Rs. 48,000 is provided in the budget for raising the Dacca Survey School to the status of the Bihar School of Engineering. It may be necessary to raise the status of the Dacca Survey School, but at the same time the question of raising the status of the Bihar School of Engineering itself ought not to be altogether lost sight of. No doubt in reply to an address of the Bihar Landholders' Association, Your Honour was pleased to say that the consideration of that question ought to be postponed pending the consideration of the proposed transfer of the Sibpore Engineering College to Ranchi. I do not know whether such a transfer has been finally decided upon; but I venture to think that, even with the Sibpore Engineering College tranferred to Ranchi, there would be found room enough for an Engineering College in the capital of Bihar itself. Nor would the cost of raising the Bihar School of Engineering to the status of a college, at least a college teaching up to the Lower Civil Engineering Examination only, be, I think, prohibitory; it has already many of the requisites of a college, and it will not I, think, require a large expenditure to give it the required degree of expansion. I most respectfully beg to press this question on Your Honour's attention.

"There is another College that is very badly wanted in Bihar. I am indeed very glad to see a provision of Rs. 33,000 for improvements in the Temple Medical School, Bankipore. It is good so far as it goes, but not until the Temple Medical School is raised to the status of a college will the requirements of Bihar in the matter of medical education be adequately met. Will it be believed that with the Medical College in Calcutta in full swing for the last 70 years or more, there is not a single Bihari Assistant Surgeon in the service of Government; will it be believed that there is not even a single Bihari graduate of medicine except perhaps one. But this lamentable state of affairs, I respectfully beg to submit, is not due to the inaptitude or incapacity of the Biharis for medical education, for the Temple Medical School in Bankipore is full to overflowing with Bihari students, and there is absolutely no reason to doubt that students will not be forthcoming in large numbers for a Medical College if the advantages thereof are brought to their doors. And taking into consideration the fact that Government maintains but one solitary college in Bihar, and that the expenditure thereupon is out of all proportion and considerably below what would be the proper share of Bihar if the total expenditure on higher education on the basis of population or on the basis of Bihar's proportionate contribution to revenue were taken into account, and also taking into consideration the fact that practically speaking the Biharis have derived no advantage from the Calcutta Medical College, taking these two facts together into consideration, I think it will be conceded that the Biharis have a fair claim to have a Medical College of their own, and I beg to press this question on the attention of the Government of Bengal to be dealt with whenever an opportunity for it should arise.

"I cannot but tender my cordial thanks to the Government of India for the large grants for Police Reform, Primary Education and for the District Boards. Police Reform means, I take it, the reform of a vital department of the administration, and as such it is of the greatest consequence that the reform should be thorough, but at any rate the Government of Bengal ought to give a fair trial to the reform suggested before we shall be justified in asking for more. As regards the grants for Primary Education, I agree with the Hon'ble Member in charge of the budget in the way he proposes to spend it; and as regards the grant to the District Boards, I think it is necessary that the Commissioners of Divisions, who will be at present vested with the allocation of this grant to the different District Boards in his division, will keep in sight in making the allocation, not only the varying necessities of the different District Boards, but also, so far as practicable, the share that would in the ordinary course of business fall to the lot of each if the distribution were made direct by the Government.

"In conclusion, I am bound to congratulate the Hon'ble Member for having been able to provide for a number of useful and worthy objects under the different heads of expenditure: Land Revenue, Excise, Registration, General Administration, Law and Justice, Police, Education, Medical, Scientific and other minor departments, Miscellaneous, Irrigation and Civil Works, and to repeat that on the whole the budget is an eminently satisfactory one."

The Hon'ble BABU BHUPENDRA NATH BASU, said:—"Sir—I offer my best congratulations to the Hon'ble Mr. Shirres for the budget which he has laid before the Council and the admirable and lucid statement with which he introduced it. So far as it goes the budget is eminently satisfactory and the Hon'ble Member is entitled to just credit for it. The last financial settlement, whatever effect it may have had upon the stability of the financial relations between the Local and Imperial Governments, does not seem to have been an unmixed good. The additional tribute which we have to pay for the larger share of the Provincial revenues which the Imperial Government has appropriated, amounts for the next financial year to Rs. 74,72,000. Against this we have to set off Rs. 49,03,000, the Imperial grant; so our net loss is Rs. 25,69,000. This is a dear price to pay for the boon of an indefinite settlement not renewable every five years, and the price, with the expansion of our local revenues, will go on increasing every year.

"We are deeply grateful for the Imperial grant of 12½ lakhs to the District Boards. It is an act of tardy reparation. The injustice done to the fund by its diversion to objects other than those for which it was originally intended has been denied. The plea has been put forward that subsequent legislation has removed the limitations which surrounded the fund under its original scheme. We need not stop to inquire into the validity of this plea. The Government may, as it well knows, validate any act it chooses: its legality may not be questioned, but its justice and propriety very well may. People submitted to the levying of the road cess which they contended was a violation of the solemn pledge given by Government at the time of the permanent settlement on the distinct assurance that the fund would be utilised for certain well understood local purposes. Can it be for a moment said that this assurance has been adhered to? Legislation may legalise but cannot justify a wrong. We are sure the whole question will be carefully considered when the Local Self-Government Bill is introduced and we trust that justice will yet prevail. But however that may be, we welcome the relief that has been given to these hard-pressed bodies, the District Boards of Bengal; may we interpret it is a sign that Government feels the injustice of its action and is willing to make amends? I admit it is a bold interpretation, but Governments, and even the Government of India, are not above possessing a conscience.

"Sir, I am told that the help offered by Government for the purpose of digging wells and tanks for drinking water has been fully availed of. I may remind the Council that the Government offered fifty thousand rupees, provided the District Boards and private individuals paid a similar sum. I am glad and I congratulate ourselves and the Government that the sum expected from private contributions was actually subscribed; but it is not fair to the people who are paying the road cess and contributing through the District Boards, that they should make further private contributions. The contributions come of course, but we all know how.

"Coming to the question of Education, on behalf of the Constituency which I have the honour to represent in this Council, and that Constituency embraces the whole of educated Bengal and includes the officers, European and Indian, engaged in the work of education, I beg to express to Your Honour's Government our sincere gratitude for the largely increased expenditure sanctioned under this head. From Rs. 34,42,000 budgeted for in 1903-1904, we have for the ensuing year an estimated expenditure of Rs. 54,07,656; we have also to thank Your Honour's Government for the great improvements projected with regard to the Dacca College, for which a sum of Rs. 2,27,500 has been sanctioned and for Rs. 37,000 sanctioned for improvements to the Bethune College.

"Sir, I tread on delicate ground when I refer to the expenditure of Rs. 1,00,000 on the Ranchi Model College. I am aware of the difference of opinion which attaches to this scheme. Fears have been entertained in some quarters that the growth of the Ranchi Institution may choke the life of the Presidency College which has been endeared to us by its long and varied associations. It carries us back to the days of the old Hindu College, to times when the western scholar had to establish his claims against the ancient forms of the east; it has given us Educationists whose names are remembered with affection and pleasure; it has given us men whom we have learnt to look upon with pride. It serves as an exemplar to eductional institutions all over the province and it is the centre of our hopes and aspirations. Any action which threatens to undermine its foundations are viewed with dismay. We have Your Honour's assurance that it is not intended to let the Presidency College die. Your Honour will pardon those of my countrymen who fear that Your Honour's successors may disregard your assurance and that a day may come when the Presidency College may cease to be.

"They point out, not without reason, that solemn pledges contained in Parliamentary Statutes and Royal Proclamations have not always been fulfilled: that assurances made to the ear have been broken to the hope, and that a succeeding Government may feel no compunction in upsetting the decision of its predecessor. I for my part do not share these fears Whatever may be the fortunes of the Ranchi College, whatever the intentions of any future Rulers of Bengal, it is not possible to conceive that the seat of the foremost University in British India, the seat of the Supreme and Provincial Governments, the seat of the highest Courts and the principal public offices, the centre of all educational activity should be without an exemplary educational institution in the country.

"To the people in the mufassil, Calcutta with its congested population, its outbreaks of epidemic diseases, its dangerous attractions and its general expensiveness, it is no easy matter to send boys to be educated in the Presidency College. To parents in Calcutta when a boy is sickening in the close and pestilential atmosphere of the town, it is difficult to find where to send him to without a break in his studies. The Ranchi College will not

supplant the Presidency College, just as Darjeeling, nay, even Simla has not supplanted Calcutta, but it will supply a long-felt want. In its hostels grouped together will live the Hindu and the Mussulman, the patrician and the plebian, and in the warm days of youth they will contract friendships which will bind them as citizens and will be no mean factors in the evolution of India.

. "Sir, whatever may be said of the Ranchi College Scheme, I think public opinion will unanimously support me in my prayer to strengthen the Presidency College and widen its sphere of usefulness. It has to maintain its position against powerful Missionary Colleges and active private institutions. No expense will be grudged by the country in giving the Presidency College the most efficient staff. As an old student of the College, I remember with pleasure and pride the days when we sat at the feet of men like Sutcliffe and Woodrow, Croft and Tawney, Elliot and Pedler. . . . . Their sympathy with the students is still remembered with affection, their influence still permeates our life. Nor is this all. If the Presidency College is to fulfil its destiny, it must be converted into a residential College with large and healthy hostels and extensive recreation grounds, where the teacher and the taught may meet untrammelled by the formalities of the class room. Your Honour's sympathy with the cause of higher education is well known. Surely, Calcutta and all Bengal may expect what Your Honour has given to Dacca, and a resuscitated Presidency College with its unrivalled laboratories and library, surrounded by neat and nice-looking quarters for the students and the professors, overlooking a broad playground, skirting it may be the river or the canal, will be an institution which will worthily commemorate Your Honour's rule.

"Sir, while still on the subject of the Presidency College, I shall take leave to call Your Honour's attention to a matter to which my distinguished predecessor in the representation of the University with all the weight that attaches to his unique experience of University affairs had made pointed reference on the occasion of the last Budget debate, I mean the reduction in the number and value of the junior and senior scholarships awarded as the result of the Entrance and F. A. examinations. These scholarships are mostly won by poor students and are in many instances the only means on which they rely for their education. It is they who have given us our most distinguished scholars and it is on them that the burden of reduction falls very heavily. The schooling fee of the Presidency College is now higher than the 3rd grade junior scholarships, and these scholars if they wish to join the Presidency College have to take to private tuition to the detriment of their own studies. Your Honour's Government was pleased to hold out a hope on the occasion of the last Budget debate to re-consider the subject. I find additional provision to the extent of Rs. 15,000 has been made in the Budget for scholarships, and I trust that the grievances of the junior and senior scholars will now be redressed.

"Sir, though the Presidency College has naturally the first claim on Your Honour's attention, I may, I hope, also plead for the private Colleges in Calcutta. Hardly any of them in its literal sense is proprietary, most of them are vested in Committees; they have to fight their way with the limited means at their disposal; they have to satisfy the needs of their students who are no mean judges of the quality of the instruction they receive. They have to face private and Government competition and stand the strain of the exodus amongst the students due to plague or other epidemics in Calcutta. They carry on their work without Government aid and hardly with any private help; and they discharge a very useful function: hundreds and thousands of poor students would be denied the benefit of English education but for these private Colleges. The new regulations compelling them to provide for hostels will seriously handicap their resources, and it would be conferring a real boon on the country if the

Government came to their help under their present difficult situation. We acknowledge with pleasure the provision of Rs. 67,000 for rent of boarding houses for students in Calcutta; may we hope that a free gift of this sum will be made to private institutions according to their requirements for the accommodation of their students, or if that is not possible only a nominal return asked for.

"We have also to thank the Imperial Government for its grant of five lakhs to the University and Your Honour's Government for its grant of two lakhs. We hope the extension of the University Buildings that is contemplated will be made with the object of housing a central laboratory and library for the use of University students, so that in time with further funds the University of Calcutta may discharge the function of a teaching University.

"Our best thanks are also due to the Imperial Government for the grant of Rs. 10,00,000 in aid of primary education; it will lighten the burden of the District Board and help the cause of education in the country. We cordially and gratefully acknowledge the efforts of Government in the cause of education. We find that in the closing year there were 1,730,614 male scholars and 162,260 female scholars in school, giving a proportion of 30·08 and 2·82 respectively against the same population of school-going age.

"There was a slight rise in the number of schools, giving a total of 66,000 schools against 215,467 villages, or roughly speaking four schools for every three villages, and these include Government-aided, Board, and private institutions. I shall not dwell on the common places of the benefits of education. The Indian handloom industry in which Bengal occupies a high place is being gradually crushed out, because the weavers will not adopt the improvements which other countries have adopted, and which may be brought within their means. The Indian husbandman knows of no other implements than those which have been handed down to him from times immemorial.

"The only means to help them is to give a wider horizon to their vision and that can only be done through the means of education. We spend the least of all civilized countries on education and while in Europe and in North and South America primary education is compulsory and free, we extract from the ignorant and ill-fed peasantry of Bengal nearly 20 lakhs of rupees in fees. If primary education cannot be made compulsory, if it cannot be made altogether free, cannot the Government cheapen it, so that it may be more largely availed of than now by the people for whom it is intended.

"But whether we can render primary education free or not, even in the case of cultivators and working men, we can certainly render it more attractive. I do not know whether the Government is aware of the nature of the text-books in use in these schools. They are intended to be science primers issued by English-publishing firms and written in a language, which it will be hard to define and discriminate. One of them, the most largely used is a conglomerate of English and Bengali and it deals with all conceivable scientific subjects: Chemistry and Physics, Botany and Zoology, Hygiene and Hydrostatics all find a place there. Neither the ill-paid and ill-equipped *guru* nor the bewildered student can dive into its mysteries, and this beautiful jumble of scientific jargon is doing service for the scientific education of Bengali children. The thing would be ludicrous if it was not so pitiable. Generations of boys are growing up in utter ignorance of what they are taught and valuable time is being wasted. There have been protests and complaints, but who cares. Not the mighty Education Department, which is passing boys through the same mould so that they may emerge with the same shape.

"This brings me to the consideration of another cognate matter. We do not know what our Rulers think of our language. They believe, I am afraid, that it is a language without shape or form and that it may be chiselled into any shape. A learned Committee of four Englishmen and one Indian recently sat and came to the conclusion that primary instruction to the agricultural youth of Bengal should be imparted in their own dialect. We are told that a book has to be written out in English and then translated into the different dialects of Bengal, so that knowledge may be acquired without the process of learning a language. It is difficult to discuss the matter seriously: it is difficult to conceive that a translation from another language is to be the medium of instruction for little children: that foreign modes of thought and expression will have to be rendered into the dialectical language of Bengal, so that they may be understood by the illiterate classes. We may ask these learned gentlemen whether they would translate the word stomach, for instance as 'pat' for East Bengal as 'pet' for Central Bengal, as 'pent' for West Bengal and I do not know into what other word for all the different areas over which the Bengali race has the misfortune to be scattered. I do not know whether it is known to these gentlemen that the Bengali poetic renderings of the *Ramayana* and *Mahabharata*, the immortal works of Kirtibasha and Kashidasa are read or sung all over Bengal and notwithstanding the large admixture of Sanskrit words generally understood. I do not know whether they have witnessed the spectacle of a Jatra party from Calcutta visiting the interior of the country and largely attended by the literate and illiterate classes and equally appreciated by them. This is not the place nor the occasion to argue the question. In any country but in India nobody would have believed that such a recommendation could have been made and in no country would such a recommendation be given effect to. But it is no exaggeration to say that we do not know how we may fare here. If we oppose we impute, if we keep quiet we acquiesce. We have no intention to impute, but the country has unanimously protested against the recommendation and we trust Your Honour will deliver us from this impending calamity. The Bengali language is not so difficult that simple text-books in indigenous Bengali cannot be written in an intelligible form for the agricultural population. It is enough that we import all our necessaries of life from foreign countries, it is enough that we clothe our agriculturists with the produce of Lancaster, let him have his language coined for him in his own country.

"Sir, I have on previous occasions dwelt on the grievances of the Subordinate and Provincial Educational Services. Your Honor's Government has been pleased to state that the matter is under the consideration of the Government of India. We hope, Sir, that we shall soon have a scheme which will remove one of the gravest blots in the educational system of this Province, an ill-paid staff to discharge what every civilized Government considers the most important function of administration.

"Sir, there is another class of officers who deserve some consideration at Your Honour's hands. I refer to the Sub-Deputy Collectors. They come from the same strata of society as the Deputy Collectors and have generally the same educational qualifications. Their initial pay of Rs. 100 specially when it is considered that they get no travelling allowance up to a distance of 15 miles is hardly adequate and is not desirable in the interests of the service itself or of the State. We are glad to find that the Financial Statement shows that Rs. 2,85,000 has been set apart for the re-organization of the Subordinate Executive Service and we are sure that the claims of this deserving class of officers will be duly considered.

"Sir, I have already detained Your Honour's Council too long and I dare not go into many other questions which vitally concern us. Your Honour is aware that there have been numerous complaints about the way in which gun licenses

have been issued or rather withheld. We fail to realise why in areas comparatively free from acts of violence, licenses previously issued are being cancelled. It can have but one meaning, that our Rulers, with every year that is passing, are growing more distrustful of the people, but that is a meaning which it is hard to attach to the action of the authorities. There must be some overzealous policeman somewhere, and we naturally appeal to Your Honour for relief.

"It is not possible at this stage to dwell on the effect of the recent Resolution of Your Honour's Government abolishing competitive tests for admission to the Provincial Civil Service. The merits of competition *versus* nomination have been discussed threadbare. Your Honour's distinguished predecessors have held different views, but views may certainly change.

"Sir, flattery and sycophancy have been justly condemned by very high authority. It seems that a variance between profession and practice is not the monopoly of the East. While we are told that sycophancy is an unpardonable sin allied to untruth, we are made over hand and foot to the tender mercies of the lord of the district. We have no means to ascertain how the youth of poor and middle class parents will approach the Collector, how their merits or demerits will be known to the earthly arbiter of their destiny. We are essentially a poor people, non-commercial and non-industrial. Service in the Government of their country has been to our young men one of the principal inducements to study. Altruistic and lofty ideals of knowledge for the sake of knowledge have not generally been the guiding principles of our young college students, as we are told is the case with the youths of more favoured nations. They must put aside their self respect and they must discard the exploded divinities of their ancient faith and burn incense at the altar of the gods who belong to a more virile race. When I think of what this will lead to, I despair of my countrymen. But while, Sir, I regret the introduction of this new system, I have to thank Your Honour for the recognition of the claims of the University. Your Honour has conferred upon the University the privilege of recommending three students for these appointments and this will to some extent keep the door open for poor but deserving boys to get into the service: it will palliate but not remove the evil.

"Sir, there is one matter to which I crave leave to refer before I conclude. Last year I appealed to Your Honour for relief on behalf of the malaria-stricken people of Bengal. On that occasion the Hon'ble Mr. Shirres in the course of the budget debate was pleased to say that a special officer had been deputed to make inquiries, but his report had not then been received. I trust that that report has since been received. In this connection I shall call Your Honour's attention to the following figures:—In 1903 while death from plague amounted to 65,680, fever accounted for 1,654,941 deaths: that is, roughly speaking, deaths from fever were nearly 25 times as great as deaths from plague. We are afraid that while this is the case, fever does not receive the same attention that plague does. The one arrests attention both of the people and the Government by its suddenness, the other is allowed to kill the Bengal peasant by slow degrees, and where it does not kill, it leaves behind a weakened population, who drag on a miserable existence. And the remedy is plain enough. In the mufassal towns, with their defective drainage and insanitary conditions, fever contributed 14·26 *per cent.* to the death-roll, whereas the rural areas were responsible for 22·65 *per cent.* And in the tract of the country surrounding Calcutta, *viz.*, in the 24-Parganas, while the death-rate from fever was 19·98 *per cent.* in Calcutta itself it was 5·74 *per cent.* The figures are significant and shew which way the remedy lies. No doubt the ignorance of the people as regards sanitary matters is to some extent responsible for this terrible havoc, but sanitary science will not help them to get the money for large drainage operations and good drinking water. The advance of science since the last Malaria Commission was held has been very great and we appeal to

Your Honour to appoint another Commission or Committee of Inquiry into the causes of death from malaria in Bengal and their remedies. We can assures Your Honour no expense will be grudged by the people on this head.

"While on the subject of malaria, may I draw Your Honour's attention to the condition of the Arambagh Sub-division of the District of Hooghly. In former times it used to be one of the healthiest places in West Bengal and was the breeding ground of that splendid body of men who formed the ranks of the dacoits. It suffers terribly from inundation which devastates the country for miles and miles, thrice and sometimes more in every year, allowing not a blade of grass to grow and then follows fever in its train. This is what was said of the Sub-division in the last Census Report:—

"This Sub-division is generally looked upon as the unhealthiest part, and its crops are often damaged by floods from the Damoodar, whose waters are now allowed to spill over its right bank in order to obviate the risk of the embankment of the left side being breached. In spite of the immigration that has taken place, the district is still less populous by 70,000 than it was in 1872, and even then the district had suffered terribly from the fever epidemic for nearly a decade. It seems very doubtful whether it will fully recover its losses until the drainage problem is solved. The place is but three or four hours' journey from Calcutta, and I would respectfully appeal to Your Honour to visit the locality during the next rains to realise the misery and the sufferings of the poor inhabitants. I have ventured to make the appeal, relying upon Your Honour's sympathy for the poor and the suffering; and I am sure my appeal shall not be in vain.

"Sir, coming nearer home, I may be pardoned if I make some reference to the Municipality of Calcutta. We read with a profound feeling of disappointment the Resolution of Your Honour's Government on the last Administration Report of the Corporation of Calcutta. The Special Committee of that Corporation has brought out defects both of administration and constitution which were serious. People expected that the Government would give directions to rectify the defects which the Committee had so lucidly pointed out. Even the Hon'ble Mr. K. G. Gupta had to adopt the main charges that the Committee had substantiated, and it was scarcely expected that the Government would be influenced in its judgment by the constitution of the Special Committee and would practically dismiss the report from the consideration with the following remarks:—

The Special Committee of the Corporation reviewed the Chairman's report in a very thorough manner, and rendered good service in drawing attention to defects which demand careful attention. But they were as a body frankly hostile to the whole system of administration introduced by the present Calcutta Municipal Act. A very cordial appreciation of good work was not perhaps therefore to be expected in their review.

"I do not think the Government could have overlooked the fact that one of the members of the Committee belonged to an important body which was violently opposed to the old order of things and was partly responsible for the new, and that the report was unanimous. However, I do not wish to detain the Council about controversial matters in regard to the Corporation of Calcutta. I shall as a resident of Calcutta call Your Honour's attention to the following observation in the Government Resolution:—

The supply of unfiltered water is causing anxiety. The large increase in the number of connected privies has materially reduced the pressure in certain localities.

"As my hon'ble friend the Chairman of the Corporation will admit, it has failed in many instances and has proved very vexatious. It is a serious

menace to the health of the town when the supply of unfiltered water to the privies fails, as it frequently does in the hot season, and I would appeal to my hon'ble friend and ask Your Honour to support me in the appeal, not to insist on converting service into connected privies until the unfiltered water-supply has been placed on a more satisfactory basis.

"Sir, I showed from figures which I placed before the Council on the occasion of the last budget debate, that the Corporation no longer represented the people of Calcutta, and the representation such as it is of the northern portion of Calcutta was extremely weak. The old members are gone and the new have not the advantage of the experience of the past behind them. In many cases representatives have come in, because people did not care as to who should represent them, and the result has been that that the northern portion of Calcutta has not received the same amount of attention that it deserves. Though along with my colleagues I felt it my duty to secede from the new Corporation under circumstances I need not now advert to, yet I am ready and willing to acknowledge the services of the new Commissioners specially of the gentlemen representing the Chambers of Commerce, who ha taken great pains to beautify and adorn the town. That the north has not received the same care as the south, is one not so much to the apathy of the Commissioners as to their ignorance of the conditions of the northern town.

"So long as my hon'ble friend continues to be the Chairman of the Corporation, we are fully assured that the Indian portion of the town will not be neglected: he knows the people and the people know him: he knows their wants and grievances, and is always ready to come to their rescue, but those who have been in the Corporation can alone realise how difficult it is for the Chairman to direct funds to be spent in any particular area unless he is strongly backed by the representatives of that area: a stronger representation takes away from what ought to have gone to a weaker neighbour. Situated as we are the only person we look forward to is the Chairman, and we have found him always ready and willing to help us. But, Sir, this state of things is not satisfactory. The Hon'ble Mr. Greer has lived down the sinister reputation that the Corporation had acquired of extinguishing its Chairman, but the Corporation cannot hold him tied down for ever. It is necessary that the people should be given some voice, and I submit a preponderating voice, in their own affairs.

"The defects of the present constitution of the Corporation are admitted even by those who were its warmest supporters at the start and I appeal to Your Honour's Government to take a step forward. I am sure Your Honour will be the last person to adhere to a policy after it has been found wanting and there is no doubt that the policy which evolved the Municipal Corporation as now constituted, has been found to have been misconceived. Calcutta requires expansion, its people want more elbow-room. The people of the northern part justly complain of the want of a space like the maidan in the south. Let us extend the limits of Calcutta westward across the river, northward and eastward across the canal. It is cruel to remove bustees without providing accommodation for the poor people to live in the outskirts of the town. There are no healthy quarters in the outskirts, no easy and cheap railway communication to bring the people in. The Improvement Scheme of Calcutta will fail, if we cannot provide for a healthy and easily accessible suburban area. Indications are not wanting to show that Your Honour has in view a large scheme for the re-organization and reconstitution of the Corporation of Calcutta. We hope they are correct and we pray for a generous consideration of the claims of the people in any such scheme that may be framed.

"Referring to the Improvement Scheme the public are rather surprised that its details have hitherto been kept back from them. It is incomprehensible why the public are denied an opportunity of expressing their views on any measure until it has reached a stage were public criticism becomes useless, either because the scheme has become so far developed that any material alteration is impracticable or because the prestige of the Government is likely to suffer if it makes concessions to public opinion. It would have been a great advantage to the Government and to the public if the outlines of the scheme, specially its financial provisions, had been well considered here before they were submitted to the Secretary of State. Now that the sanction of the Secretary of State has been received, the scheme should be published for public information and criticism without keeping them in further suspense. In this connection may I appeal to Your Honour to give the people an adequate representation in any constitution that may be framed for carrying out the scheme, so that the difficulties of the people affected may be properly considered and justly dealt with and what is more the people may feel that they will be justly dealt with.

"There is one other matter to which I wish to refer before I close. There is a great deal of alarm at the threatened imposition of further cesses under the Local Self-Government Bill. It stands hardly to reason that with a treasury overflowing with surpluses further fresh taxation should be resorted to.

"The public are also alarmed at the rumours of the introduction of a measure which will place the ignorant Bengal villager under the clutches of the Police. Balers and shippers may refuse to buy wet jute, but it is unreasonable to expect the Corporation or Government to send people to jail because they fail to supply to balers and shippers jute of the quality contracted for. It would be as reasonable to expect balers and shippers to be sent to jail if they fail to pay the price of the jute they contract to buy.

"Sir, I have detained, I am afraid, Your Honour's Council at great length. I thank Your Honour for the patience with which you have listened to our tale of grievances. Busy men as we are no one realises more than we do the tiresome repetition which we feel it our duty to inflict on this Council; but this is our only opportunity to make ourselves heard; we are told that our platform resolutions passed at meetings, some of which we attend at considerable sacrifice, are the mere expressions of opinion of meddlesome busy bodies and we are not above feeling a suspicion that our speeches in Council count for little more. If the Government had realised how much a resolution which it pens in the seclusion of its bureau, how much a Bill which it drafts in its Secretariat recess, moves the palpitating mass of humanity placed under its care, weak and weighted down it may be, but swayed by the same emotions as their more fortunate brethren and trying to lift the burden of centuries of ignorance and misgovernment; if they had realised how a scheme dividing the language or the people, looking so simple on paper; how a resolution which undoes the gracious promise of the late Queen and excludes the people for nothing else than the crime of colour from appointments in their own country, even in the Department of Police, for we are willing to accept any challenge on the ground of fitness, sends a throbbing motion of pain through their fibres penetrating down to the very centre; if they had realised how this same mass of humanity, not often trusted and often misinterpreted and misunderstood, turn in their hopelessness and helplessness to the generous promises of noble Englishmen, who in the past have come to their rescue, our Government would pause and would give a more patient and sympathetic hearing to our representations. I have every reason to trust that though effect may not be given to what we believe is conducive to the interests of the people, our humble representations will receive sympathetic attention at Your Honour's hands."

The Hon'ble BABU KALI PADA GHOSH said:—"I beg to offer my hearty congratulations to the Hon'ble the Financial Secretary on the presentation of a budget which very well may be called a Prosperity Budget. It is gratifying to find that there has been an increase of over 12 lakhs to the receipts for the current year, as originally estimated. The consideration of the details in connection with this increase shows that on one single item, *viz.*, Stamps, there has been an increase of 3 lakhs. In explanation of this increase we are told that it is due to an unusual expansion of Stamp Revenue, chiefly under the head of 'Court-fee Stamps.' This evidently means that there has been an unusual increase in litigation, and I would ask the Hon'ble the Financial Secretary to favour us with an explanation as to the cause which has occasioned this increase. Although I myself am a lawyer, I cannot say that I can felicitate the country on this enormous expansion of litigation.

"Turning to the expenditure side, we find that in the current year there have been savings amounting to Rs. 22,55,000. This is certainly not a matter for congratulation. These savings have evidently been achieved by deferring the execution of several reforms, such as schemes for the improvement of salaries of the ministerial officers, for an increase in the number of Deputy Collectors and the re-organisation of the Subordinate Executive Service and for Educational reforms. While placing the Financial Statement for the current year in March last, the Hon'ble the Financial Secretary congratulated himself on the introduction of a budget under which these much-needed reforms would be carried out; but it is to be regretted that very little progress was made during the year towards executing any of them. In explanation we are told that necessary sanction could not be obtained before the close of the year; but, considering the fact that these schemes have been in contemplation for some years past, this explanation is rather disappointing, and we do not know when we shall see the actual completion of these measures.

"It is indeed satisfactory to notice that in the budget placed before us the permanent expenditure, allowed to the Local Government in the Financial Settlement, has been increased by Rs. 53,98,000, and that this increased amount has been distributed on several schemes involving urgent reforms. But, as regards the improvement of the position of ministerial officers, I must confess to a sense of disappointment. In the budget estimate for 1904-05 provision of 4 lakhs was made on this head; but in the budget under consideration the amount provided is only Rs. 2,75,000, *viz.*, Rs. 1,11,000 shown under 'Land Revenue' and Rs. 1,64,000 under 'Law and Justice.' Will the Hon'ble the Financial Secretary be good enough to explain the cause of this reduction in the course of his speech?

"The said sum of Rs. 53,98,000 includes the magnificent Imperial grant of Rs. 34,50,000—a grant for which we are deeply grateful to the Government of India. This grant has been made for special purposes, *viz.*, for Police and Educational reforms and grants to District Boards. These are certainly objects on which money cannot be too largely spent; and we hope the reforms, for which these assignments have been made, will be fully carried out before the close of the next financial year.

"Coming to the subject of 'Education', we find that in the budget placed before us the grant on this head has been raised from Rs. 35,19,000, provided in the current year's budget estimate to Rs. 47,52,000. We are deeply grateful for this increased appreciation of our educational wants; but, having regard to the growing needs of our people and our vast population, the grant must be regarded as not sufficiently adequate.

"I would next turn to the subject of Police reform—a subject which was agitating the minds of our countrymen for a considerably long time and which has at last been set at rest by the Resolution of the Government of India recently published. In paragraph 8 of his Explanatory Note, the Hon'ble the Financial Secretary has expressed his high appreciation of the character of the reforms, inaugurated by the said Resolution, but I regret I cannot fully share the Financial Secretary's views on this subject. The provisions made

for raising the pay of the Constables and Sub-Inspectors are certainly welcome, as they are an improvement, although not much, on the existing state of things; but those regarding the appointment of higher officers of the department have been received by us with a sense of profound disappointment. The distinction made between the appointment of European Assistant Superintendents and of Indian Deputy Superintendents, based as it is on racial considerations, is most lamentable.

"Then, again, we find that the promotion to the grade of District Superintendent will, in the case of European Assistant Superintendents, follow in the usual course but in the case of Indian Deputy Superintendents it has been considered inexpedient to reserve any fixed number of District Superintendentships, and they will be only eligible for promotion when their fitness is fully established. The practical result of these provisions will, we are afraid, be to shut the door to higher appointments in the department against the people of the country. Our disappointment is all the more keen that such a state of things should evolve out of the labours of a Commission which was presided over by a just and sympathetic ruler of the country like Your Honour.

"The object for which the grant of 12½ lakhs has been made to the District Boards has sufficiently been explained in the Financial Secretary's Note; but I desire to point out that what is wanted on the interior of the country is not so much roads and communications as an adequate supply of pure drinking-water. I trust that a large portion of this grant will be devoted to this purpose, and may I be permitted to express the hope that Your Honour's Government will be pleased to issue instructions upon these lines to the district authorities? The researches of eminent experts have left no doubt that among the potent causes of cholera and malarial fever is bad and impure water; and a Government which removes this want will be entitled to the unspeakable blessings of the country.

"I will next invite Your Honour's attention to a matter which specially affects the division of Chota Nagpur which I have the honour to represent in this Council. It is a question connected with Irrigation in that part of the country. The failure of rice crops in Chota Nagpur has been somewhat too frequent in recent years; and in the year 1897-98 it resulted in a severe famine. This failure can hardly be attributed to want of rainfall, as we have scarcely less than fifty inches in a year, but it is generally due to the failure of what is called *hatiya* rains of October. In the event of their failure, the only means of saving the crops lies in artifical Irrigation; but the *bunds* and *ahars* which afford the only feasible means of irrigation in Chota Nagpur have in most cases gone out of repair and their beds are silted up. The landlords in Chota Nagpur are generally spendthrifts, and they have neither the means nor the inclination to undertake reforms in this connection, and the only improvement of the *bunds* is to be looked for from the tenantry. But the tenants, if left solely to their own resources, will hardly be able to do the needful in this matter.

"The system of advancing loans for improvement of *bunds* has not proved a success in Chota Nagpur, as the rigorous realization of arrears through peons has proved a source of harassment and given rise to a feeling of general repugnance to have recourse to Government for loan. Although a considerable portion of the division, I may say more than half, is practically under Government management,—I mean the portion comprising Government estates, Wards' estates, Encumbered estates—it is to be regretted that even in these estates very little has hitherto been done in the way of executing useful works of irrigation.

"The Report of the Indian Irrigation Commission, which held its sittings in 1902, strongly emphasizes the necessity of improving the existing *bunds* and *ahars* and increasing their number, as will appear from an extract I quote from the said report :—

> The beds of *ahars* are silted up. The *bunds* are worn down and out of repair. In the repair of these *bunds* and the increase of their number lies the advancement of Irrigation in Chota Nagpur. In this undulating tract with its copious, if irregular, rainfall, there must be numberless small streams, the waters of which could be dammed and diverted into tanks and utilised in saving the crops at critical seasons.

"In regard to the estates under Government management, the report makes a pointed reference to the fact that much more should be done than at present by Government in its capacities of landlord and manager. We do not know how far the recommendation of the Irrigation Commission has been given effect to; and I think I shall be justified in pressing upon the attention of Government the adoption of measures calculated to give adequate relief in a matter of such vital importance. In estates under Government management, the Government can certainly do a great deal in its capacity as landlord or manager; and in other parts of the divisions where people, on account of their limited resources, are unable to do the needful, and specially where *bunds* are necessary across streams whereby water is diverted by a *pair* to a series of *ahars* and which the people cannot construct for want of any general power of combination amongst them, Government will, I trust, render adequate help by suitable grants out of the funds at its disposal. Having regard to the grants made to the District Boards by the Government of India, I venture to suggest that a part of this grant, so far as Chota Nagpur is concerned, may usefully be ear-marked for this important purpose.

"I have no desire, Sir, to make my tale of grievances too heavy, but I cannot conclude without drawing Your Honour's attention to another matter which is also of great importance, affecting as it does the constitution of District Boards in Chota Nagpur. In four out of the five districts in this division we have got Boards, but all of them are composed on a nomination system. Whatever might have been the state of things in the past, Chota Nagpur has in recent years made satisfactory progress; and I venture to submit that time has come when the Boards in Chota Nagpur should be constituted on an elective basis. I fervently pray that Your Honour's Government may see its way to give an impetus to the legitimate aspirations and loyal sentiments of the people by introducing the elective system into the composition of the Boards and thereby earn the deep gratitude of the people of Chota Nagpur. Having regard to the fact that Ranchi is soon destined under the benevolent auspices of Your Honour's Government to be a centre of high education, it is proper in the fitness of things that the boon of Local Self-Government should precede the introduction of that higher education which will foster and promote such an institution."

The Hon'ble Mr. GREER said:—"Your Honour, the Hon'ble Member for the University has referred to matters connected with the Corporation, and I desire to say a few words on the subject. I am accustomed to hearing complaints regarding the neglect of the Northern Wards of the City, but I am unable to find out any period in which so much has been done to improve the locality as during the past few years. I do not propose to weary the Council with details of Municipal Administration; they are to be found in the annual reports. I would only ask the Hon'ble Member to consider at what period in the history of the City of Calcutta has so much money been devoted and attention given to the wants of the inhabitants as regards conservancy, the cleansing of streets and *bustees*, the water-supply, the opening out of public squares, and such like municipal conveniences. The answers will be found in the annual reports. The area is overcrowded with buildings, constructed in defiance of sanitary laws, and people, the majority of whom have an elementary knowledge of the principles which govern the public health, and the Corporation have a most heavy task in coping with the evils which they have received as a legacy from the past. They are facing the difficulty and will continue to do so, but it is only reasonable to ask for a proper comparison to be made of the state of things in the present and the past and for an exercise of patience for the development of improvements which are being carried out. As regards the unfiltered water-supply, I do not consider it a satisfactory system. In my opinion it should never have been introduced. An accidental breakdown of the engines at Mullick's Ghât brought about a temporary failure of the unfiltered water-supply last year, but the pressure has been fairly maintained since then, except a short interval for the repair of the main. The main pipe along the Strand Road is unduly small for the demand of the northern part of the City, and, in order to meet

the difficulty, provision has been made in the coming financial year for the construction of a 24-inch main at a cost of Rs. 66,000, which will increase the pressure by 15 feet. I would here briefly note that a scheme is under consideration to abolish the unfiltered water-supply, substituting filtered water throughout the town and giving the inhabitants an ample supply of pure water. I do not know the Hon'ble Member's source of information regarding the completed sewers in the suburbs declared to be unfit for use. I am informed by the Engineering Department that the total length of sewers to be constructed under the Suburban Drainage Scheme in round figures is about 43 miles, and that a total length of 99,000 feet were finished before the year 1900. Of this finished length already taken over, so far as they have discovered, 200 feet have failed owing to unforeseen causes, or about ·2 of the total length.

"A reference has been made to Local Self-Government in Calcutta. I would ask your permission to say a few words on a subject which I trust will engage the attention of the Council at no distant date and bring about legislation in the interests of Municipal Government in this City. Your Honour has lately issued a Resolution which should have the effect of the needful information being collected and definite proposals being prepared for the consideration of this Council. I refer to the Borough system. It is in force in London, where various complications exist owing to the presence of conflicting authorities—the Local Government Board, the London County Council, the Borough Council and Vestries. In Calcutta there is a clean page, so to speak, in the absence of vested interests. Briefly speaking the system consists in the creation of a number of Boroughs working with a certain degree of independence in subordination to a central authority—the Corporation. The preliminary steps in this direction have been taken in Calcutta since the passing of the existing Municipal Act by the division of the City into four districts, each provided with a District office, equipped with Engineers, Health Officers and Building Surveyors and the necessary subordinate staff, clerical and outdoor. The annual budget of the Corporation now shows the distribution of municipal funds under various municipal heads amongst the four districts. A process of decentralisation has thus been carried into effect, but any further substantial progress requires legislation, and the creation of Boroughs is the natural and needful step. The time therefore has come for extending the system by giving each of these districts some degree of independence for the discharge of its municipal duties. Under such a system the Corporation, including the representatives from Borough Councils, would retain in their hands works which may be classed as Metropolitan, as, for example, main drainage and water-supply, and especially the preparation of the annual City Budget with control over Borough Budgets. The Corporation and the headquarters staff would thus be relieved from dealing with an enormous mass of petty works and details, and could devote more time to important major operations.

"On the other hand, the Borough Councils, working within Budget limits, might deal with local affairs, the cleansing of the Borough area, the watering and lighting of its streets, and numerous minor works. The Borough Council might work with its own Chairman (a non-official) and Committees, and many representative men would find ample scope for their energies in these local administrations. It is desirable that the services of these men should be utilised in municipal affairs and, there being proper guidance, the public would derive great benefit from them.

"Such is the first part of the scheme, but I am strongly of opinion that to stop at this point would be to shut our eyes to a portion of the measure which presses most urgently for attention namely, the extension of the system to the Suburban Municipalities and their amalgamation in the Borough system under the Corporation. To an outsider the Suburban Municipalities and the City proper together constitute Calcutta. In many cases the wants of the inhabitants of these areas are alike. Many of these Suburban Municipalities have direct concern in the work of the Corporation, as for example in the Water-Supply and Main Drainage Schemes, and the interests of the residents would be benefited by their representation on the central body.

"It is desirable that a systematic form of Municipal Government should be established over Calcutta and its Suburbs, and that the latter should be brought into more close communication with the central authority. There is an imminent danger of the Suburban Municipalities being overrun by the surplus population of the City and the evils being repeated in them which are now menacing the prosperity of Calcutta.

"The second part of the scheme presents extra difficulties as regards taxation and other details, but there is no need for uniformity in all particulars, and the measure does not necessarily contemplate the imposition of the existing rates and taxes of Calcutta over the Suburban Municipalities I have said that I trust some such measure may be considered by the Council at no distant date. It involves no admission of failure in the past, but merely implies a natural development of existing conditions. I am of opinion that the change is called for alike in the interests of the Government and the rate-payers, and that a postponement of the measure would involve an increase in the difficulties to be met with hereafter in introducing this great and needful reform."

The Hon'ble MR. CARNDUFF said:—"Sir,—It will not be necessary for me to detain the Council long; for the Education and Judicial Departments have been very liberally treated, and the tone of the speeches to which we have been listening, is so far as those Departments are concerned, in the main congratulatory.

"For primary education the special assignment of ten lakhs of rupees will enable us, through the District Boards, to make an effective start in the direction of providing decent buildings for primary schools and so supplying a very real want and removing a reproach; to carry out a scheme for the development of indigenous Muhammadan primary schools; to extend facilities for education in rural areas, in some cases by establishing primary schools with courses specially adapted for the children of the agricultural population, and in others by converting a number of existing lower primary schools into schools with simpler courses of study and shorter hours of attendance; to raise many lower primary to the rank of upper primary schools, and to establish new schools of the latter class; to found additional training schools for teachers for rural primary schools; and to strengthen the subordinate inspecting agency, which is, and has for years been, very inadequate.

"As regards the proposal for the translation into the various dialects of text-books for lower primary schools, I would remind the Hon'ble Babu Ambika Charan Mazumdar, the Hon'ble Mr. Chaudhuri and the Hon'ble Babu Bhupendra Nath Basu that the Lieutenant-Governor has lately agreed to extend till the 15th April the period within which opinions will be received. I am, therefore, not now in a position to make any definite statement on the subject; but the Hon'ble Members may rest assured that it will be approached with an open mind, and that their objections will be carefully considered. The special scholarships, regarding which one Hon'ble Member has asked for information, are industrial scholarships intended for Indian students proceeding abroad to study technical subjects. Four such scholarships have been provided for students who are now reading at the Birmingham University, and two mining scholarships will be tenable by students attending the Civil Engineering College at Sibpur. The Nizamat scholarships mentioned in the budget will be awarded, as heretofore, to deserving members of a noble Muhammadan family. The Kindergarten system has now been regularly introduced, and the expenditure of almost a lakh of rupees for the purchase of new and improved appliances has been sanctioned. As regards training schools for gurus, the intention is to establish these at sub-divisional headquarters, and proposals for the creation of training colleges have been submitted to the Government of India. How great are the needs of Bengal in this respect is strikingly seen when it is stated that the percentage of trained teachers in primary schools in this Province is 4·1 only, as against 23·4 in Madras, 34·1 in Bombay, 39·2 in the United Provinces, and 48·3 in the Punjab. The present training schools are not suitable for the purpose of training

teachers for rural primary schools, and are barely sufficient to produce enough teachers for upper primary and middle vernacular schools. It is proposed, therefore, to open special training schools for the teachers of rural primary schools, and it is considered necessary to open not less than 70 such schools, each capable of training 40 students a year; but even at this rate it will take some sixteen years to provide for the existing number of rural primary schools. A scheme for the re-organisation of the Educational Services is as I have had occasion to state in answer to a question in Council two weeks ago, now before the Imperial Government, and, if it is sanctioned, special provision will be made for the funds required to carry it into effect.

"The Hon'ble Babu Bhupendra Nath Basu has urged that hostels and quarters for professors should be provided for in connection with the Presidency College. I would remind the Hon'ble Member that the Eden Hindu Hostel for students was established some years ago; and I may add that the question of building quarters for professors near the College is under consideration.

"As regards the proposal to raise the Bihar School of Engineering to the status of an Engineering College, I am not in a position to say more at present, in reply to the Hon'ble Babu Saligram Singh, than that the question has not been lost sight of.

"The Hon'ble Mr. Larmour has referred to what he has styled 'primary technical education,' and here, no doubt, much remains to be done. When communicating their orders upon the Report of the Committee on Industrial Education, the Government of India asked this Government to prepare a scheme, and promised financial aid to it, if approved. They observed that it would probably be found that the industry to be dealt with first should be weaving; and accordingly this Government convened a Conference at which both the Bengal Chamber of Commerce and the Bengal National Chamber of Commerce were represented. The result was that definite proposals for the improvement and encouragement of the hand-loom industry were submitted to, and are now before, the Government of India. That scheme will, of course, be but a beginning, and will, it is hoped, be only the first of others having for their object the training of the ordinary artisans to whom the Hon'ble Member has referred. Proposals for the improvement of the bone and hide-curing industries have already been put forward, and the Hon'ble Member now mentions wood-work and other handicrafts. It is the intention of this Government to turn to these as soon as the weaving scheme has been fairly started.

"In the Judicial Department the claims of the ministerial establishments attached to the Civil Courts have not been overlooked, and I am glad to be able to say that a proposal to strengthen the Nazarats in particular is about to be referred to a strong Committee, which will meet probably next July.

"The explanation why the budget provision for temporary Subordinate Judges during the current year has not been fully expended is that, whereas we provided for three extra officers throughout the year, it was found unnecessary—and the Government was guided in the matter entirely by the Hon'ble Judges of the High Court—to employ them for more than six months. As regards the figures relating to District Judges, the fact is that some of the expenditure budgetted for last year, though falling under the heading 'District and Sessions Judges,' was intended to meet the cost of the appointment of night-watchmen for the civil courts, and fewer appointments than were anticipated were found to be actually necessary.

"The outcome of the recommendations made by the Police Commission will, I believe, be dealt with by another official Member, and I need not offer any remarks on the subject."

The Hon'ble MR. SHARP said:—"Sir, I have to thank the Hon'ble Members who have spoken for the congratulations which they have been good enough to give me and also for the courtesy with which they have responded to my request that they would furnish me beforehand with an indication of

the particular topics they proposed to touch upon. I regret, however, that in some cases the intimation was received too late for me to examine or deal with the facts and figures other than those relating to the budget.

"In the first place I may endeavour to re-assure as far as I can those Hon'ble Members who see nothing but discouragement in the increase of revenue under various heads. The increases under Stamps were principally in the following districts:—

	Rs.		Rs.
Mymensingh ...	39,000	Bhagalpur ...	59,000
Tippera ...	39,000	Purneah ...	74,000
Gaya ...	56,000	Backergunge ...	33,000
Mazuffarpur ...	64,000	Calcutta ...	1,71,000

"In Calcutta there was a large increase under general stamps. In the other places the increase according to the explanations which have been received is due partly to the Survey and Settlement operations and partly to additions to the Judicial staff.

"The Survey and Settlement operations, however, although they bring matters to a head at the time tend to prevent subsequent litigation. Also the increases following on additions to the Judicial staff are due in part to the clearing off of arrears. On the other hand it is probable that other additions to the Judicial staff on which we have been congratulated will lead to enhanced receipts in other places.

"Again the Hon'ble Babu Ambika Charan Mazumdar complains of the increased estimate for ordinary collections of Income-tax which he contends is not fair and legitimate. If, however, he will turn to paragraph 20 of the Explanatory Notes he will see that the average annual increase during the four years ending with the year 1902-1903 from the classes who are still liable to assessment was Rs. 1,73,000. Against this average increase of Rs. 1,73,000 we have estimated for an increase of only one lakh. Although, therefore, we have not budgetted for a decrease our moderate estimate contemplates the possibility of a large falling off in the rate of increase, and perhaps that may satisfy the Hon'ble Member.

"As regards 'Excise' I need only refer to the speech of the Hon'ble Mr. Baker in the Imperial Council on Wednesday, which dealt fully with the subject.

"My hon'ble friend Babu Bhupendra Nath Basu makes out that the new settlement gives a net loss of Rs. 25,69,000 a year. I do not propose to go over the discussions regarding the financial settlement again or to take up the time of the Council with an explanation of the figures. I have however a statement here showing that both in the current year and next year there is a net gain instead of a net loss. This statement I will lay upon the table.

"Several Members have expressed regret at the existence of savings due to our failure to obtain sanction for large schemes especially to the scheme for the improvement of the pay and position of Ministerial Officers. The savings on account of the scheme for Deputy Magistrates are comparatively small because the large grant which the Government of India have promised will not be made until a scheme is sanctioned. The proposals regarding the Subordinate Executive staff have now been sanctioned. As regards Ministerial Officers I can only say that this Government has spared no efforts to push the scheme through and equally shares the regret expressed by the Hon'ble Members. There was no cut and dried scheme ready beforehand, but as soon as we knew that money was likely to be available one was prepared. I fear that I must plead guilty to having been far too sanguine when I spoke last year of our ability to push through quickly a scheme of such magnitude. The preparation of the Proposition Statement by the Accountant-General was a *magnum opus* in itself and took time. The scheme also was bound to contain and did contain many debatable points, and at the instance of the Government of India the Lieutenant-Governor has directed the appointment of a Committee to prepare

a larger scheme. The Lieutenant-Governor hopes however that it may be found possible to allow an *ad interim* increase of some kind without waiting for the report of the Committee. I may also explain that the reduced provision for Ministerial Officers in next year's budget to which allusion is made by the Hon'ble Babu Kali Pada Ghosh is not due to the scheme having been cut down but to the fact that we do not anticipate that any orders of the Secretary of State can be received for some time and we have therefore provided for payment for only part of the year. If, however, sanction is obtained at an earlier date we shall transfer money from some other heads so as to enable payments to be made at once.

"The Hon'ble Mr. Larmour has expressed the hope that if Chittagong goes over to Assam the grants we are now making to that port will be refunded. The money, however, was made over to us by the Government of India expressly for expenditure on Chittagong and I fear that if Chittagong goes the money goes with it. Nor can I satisfy the Hon'ble Member with any promise that the Provincial Government will make any large contribution towards the cost of the Improvement Scheme. The expenditure in Calcutta on Public Works, Medical, Education and Police is large and we have just heard a complaint from the Hon'ble Mr. Chaudhuri on the subject. Regarding the scheme for housing Government servants in Calcutta I may say, however, that when it again comes before this Government, as no doubt it will do, the remarks of the Hon'ble Member will be carefully considered.

"Regarding Water-Supply I may say that the special grant which we made at the beginning of the year has been all utilised and in fact has been exceeded, but we met all the demands which were made upon us. On the general question I have nothing to add to what has been repeatedly said and I shall confine myself to quoting remarks made by the Hon'ble Mr. Baker with which I entirely agree. He dealt with this subject in three successive years but I shall content myself with quoting the remarks made in 1900—

> But the notion that the Government can by any action on its part provide the people with an adequate supply of good water is an absolute chimera. Nothing can be done except by the people themselves. Last year I pointed out that almost every village in Bengal possessed one or more suitable tanks or wells which, if properly looked after, would provide all that is required. In 1896 it was pointed out that in 1882 Government gave a grant of one lakh for Water-Supply in Nadia, yet in produced no material effect. What is wanted is that the zamindars and the villagers themselves should re-excavate and maintain existing tanks. A doctrine of self-help is usually distasteful; but in this vitally important matter there is no other possible remedy.

"As regards Malaria also I have little to say that is new. We have made arrangements to manufacture more Quinine, we have increased the quantity of quinine in pice packets from five to seven grains and we are arranging to increase the number of distributing centres. The Hon'ble Mr. Chaudhuri derives no comfort from the entry of Rs. 40,000 for the enlargement of the Cinchona factory in order to increase the supply of quinine because he fears that Government may derive a profit from the manufacture. Let me re-assure him on that point. Owing to improved processes the cost of manufacture is constantly being reduced but as soon as we find that such is the case we pass on the benefit to the public. Recently finding that there was a profit we increased the quantity of quinine in pice packets from 5 to 7 grains. I may also direct attention to another entry in paragraph 14 of the Explanatory Notes. The entry in question is Rs. 3,75,000 which is part of a contribution of 5 lakhs towards the cost of the Mograhat Drainage Scheme.

"The Hon'ble Member also makes the statement that I am unable to show any expense under the head of remedial measures in respect of such preventable diseases as Cholera and Malarial Fever. I have just referred to certain items of specific expenditure and in addition to those I would point out that the medical expenditure shown in the budget for next year amounts to 22¾ lakhs of rupees. This money is for the purpose of combating all disease but inasmuch as Malaria is the principal disease in this Province it may fairly be said that a large part of this expenditure is devoted to combating that disease.

"The Hon'ble Babu Bhupendra Nath Basu referred to the condition of the Sub-division of Arambagh. The report of the Civil Surgeon of Hooghly for

the year 1904 shows that no special inundations took place in the district during the year. It is stated that the year was less unhealthy than usual, and every registering circle in the district shows a diminution in death-rate. It is also reported that for the whole district the fall is most marked in Malarial fevers. The Civil Surgeon says that the decrease in the death-rate is not due to any slackness in registration but that it represents a really lower number of deaths.

"There has not been time to obtain the opinion of the Medical Advisers of Government on the request for a Commission of Enquiry. The suggestion will in due course be submitted for His Honour's orders, but speaking for myself as a layman I am inclined to think that what we require at the present stage is bacteriological enquiry of the facts known rather than a Commission for the purpose of ascertaining new facts.

"With regard to Plague I may say that we have met all the applications for money that have been made and only a few days ago Government gave additional grants of Rs. 6,000 to the Commissioner of Patna and of Rs. 1,500 to the Commissioner of Burdwan. As Hon'ble Members are aware it is very difficult usefully to incur much direct expenditure on Plague. The people do not welcome inoculation or disinfection, and there is no use building huts to assist in evacuation unless the people are willing to occupy them. As I said last year Government has not up to the present been deterred by any expense it has been called on to meet and the difficulty is to carry the people with us. The decrease in Plague expenditure referred to by the Hon'ble Mr. Chaudhuri was due to the abandonment of the policy of segregation camps.

"Lastly, I may refer to the urgent prayer of the Hon'ble Babu Kali Pada Ghosh for the introduction of the elective system into Chota Nagpur. I would remind the Hon'ble Member however that it is only a few years since District Boards were established in Chota Nagpur and the elective system can exist only where there are Local Boards. There is only one Local Board in Chota Nagpur namely that in the Gobindpur Sub-division of the district of Manbhum. This Local Board was established about two years ago and will in due course elect members to the District Board. The local officers will be consulted on the suggestion that the people should be allowed to elect their representatives, but I may point out that in more advanced places the Government is frequently compelled to nominate members because of the failure of elections."

Statement showing loss or gain in Revenue by the Financial Settlement of 1904.

	Provincial Shares under the old Settlement.		Provincial Shares under the new Settlement.		Difference.	
	Revised 1904-05	Budget. 1905-06.	Revised 1904-05.	Budget 1905-06.	Revised 1904-05.	Budget. 1905-06.
	Rs.	Rs.	Rs.	Rs.	Rs.	Rs.
			Receipts.			
Stamps ...	1,56,00	1,60,50	1,04,00	1,07,00	...	...
Excise ...	83,50	86,75	73,06	79,91	...	...
Assessed Taxes	25,00	25,50	12,50	12,75	...	...
Forest ...	5,90	6,00	2,95	3,00	...	...
Registration	8,50	8,50	17,00	17,00	...	...
	2,78,90	2,87,25	2,09,51	2,19,66	(−)69,39	(−)67,59
Adjustment	−14,19	−14,19	−4,90	−49,03	63,22	63,22
	2,64,71	2,73,06	2,58,54	2,68,69	−6,17	−4,37
Customs—						
Receipts ...	2,64	2,58	...	...	...	...
Expenditure	10,52	11,00	...	...	...	.
Net ...	−7,88	−8,42	...	...	+7,88	+8,42
					+1,71	+4,05

	Provincial Shares under the old Settlement.		Provincial Shares under the new Settlement.		Difference.	
	Revised 1904-05.	Budget 1905-06.	Revised 1904-05.	Budget 1905-06.	Revised 1904-05.	Budget. 1905-06.
	Rs.	Rs.	Rs.	Rs.	Rs.	Rs.
			Expenditure.			
Stamp ...	5,34	5,25	3,56	3,50	...	...
Excise ...	4,10	4,32	3,59	3,78	...	...
Assessed tax	80	79	40	39	...	...
Forest ...	3,42	3,82	1,71	1,91	...	...
Registration	4,82	4,98	9,65	9,96	...	...
	18,48	19,16	18,91	19,54	−43	−38
Refunds ...	1,63	1,62	1,11	1,09	+52	+53
					+9	+15
				Net gain ...	1,80	4,20

The Hon'ble MR. INGLIS said:—"Sir, the Hon'ble Mr. Chaudhuri has drawn attention to the necessity for works of Sanitary Drainage. He has particularly drawn attention to the necessity for removing shoals at the heads of dead or dying rivers, so as to cause the flow from the parent stream to again enter on them. I think, Sir, we are all agreed that this is an ideal to be desired. I am, however, afraid that in the vast majority of cases it must remain an ideal. In dealing with rivers such as the Ganges and the Brahmaputra, we are dealing with forces of nature on a vast scale. The beds and banks of these rivers are of an extremely changeable nature. It is almost impossible except at an enormous outlay to hold permanently any fixed position. If, owing to the action of natural forces which are beyond our control, a parent river chokes up the head of one of its branches and opens out another in a different part of the country, we may endeavour to remove the shoal at the head, but we have, I think, no guarantee that we shall be able to prevent that shoal reforming almost at once. At the present time we have a survey party at work in the Jessore district to see whether it may be practicable to open a channel from the big flowing river into the Bhagirathi. If this could be done and maintained, the results would certainly be excellent. To show that we are doing something in the way of improving drainage, I would mention the Mugra Hât drainage scheme. This scheme, which involves a large sluice at Diamond Harbour, will provide for the drainage of a greater part of the 24-Parganas district. The scheme has been worked out in great detail. It will provide for the internal channels being navigable and for a lock into the river. It therefore promises to be of great value to the district.

"The Hon'ble Mr. Chaudhuri has also drawn attention to the desirability of doing more for the waterways. We are doing something in this respect. As I have already stated in answer to a question, we have so far developed the channel across the Madaripur *Bil* that it is now navigable for a part of the year. We have for the last three years been working quietly to improve the channel of the Ganges from Dinapore to Goalundo by a system of *bandels* or wing-dams. We have deepened the water over the shoals. The effect of this has been satisfactory so far as steamers drawing four or five feet are concerned. It has facilitated their progress up and down the river. It has also facilitated the passage of country boats downwards. On the other hand, it is not in favour of the up-stream traffic of country boats. We have also found certain difficulties arising from the fact that the across river traffic of the railway ferries comes into competition with the up and down traffic. I mention this merely to show that these schemes are not so easy to carry out as they are to suggest.

"The Hon'ble Mr. Apcar has asked that some contribution from the Hospital Port Dues Fund should be made for the Nurses' Home. As Secretary of the Marine Department I think I may say that there can be no objection to our giving some grant from the fund, which is, I am glad to say, an affluent one.

"The Hon'ble Mr. Apcar has also referred to the urgent necessity for silt clearing in Tolly's Nala. I quite admit the urgency of the case. I have this morning received an estimate from the Superintending Engineer, which amounts to Rs. 32,602, for removing the obstruction to the traffic. The obstruction is a recurring one owing to the fact that the tide flows up from both ends of the Nala. There is a certain point where the tides meet and where rapid silting must always go on. The silting at present has been allowed to get perhaps rather out of hand, but I think, Sir, I may assure the Hon'ble Mr. Apcar that we will take prompt steps to remedy the present state of affairs.

"The Hon'ble Mr. Larmour has suggested that it is desirable that the rate of interest on the Government loan to the Kidderpore Docks should be reduced. As he stated this matter was considered by the Government of India in 1898. The orders of the Government of India at that time were communicated in a letter from Mr. Finlay, who was then Secretary to the Government of India in the Finance and Commerce Department, and he wrote:—

I am directed to say that it is not possible for the Government of India to deal with the Port Commissioners upon principles different from those which they apply to their other debtors. I am directed to say that His Excellency the Governor General in Council regrets that he must adhere to the decision that the rate of interest on the Kidderpore Dock loan cannot be reduced. I am to say that the only concession in this respect which the Government of India would at present be prepared to make is that if the Port Commissioners consider they can raise money in the open market on more favourable terms than those on which they borrowed it from the Government, the Government of India will be willing to accept repayment of the present debt without raising any question as to the stipulation made regarding the period of repayment.

"The question is, Sir, I think rather of Imperial than of Provincial interest. If the Port Commissioners think it desirable to re-open the question, I am sure the Bengal Government will give their arguments full consideration; but having regard to the fact which the Hon'ble Mr. Larmour has himself stated, that the finances of the Port Commissioners are at present fairly prosperous, I do not think we can hold out much hope that the Government of India will re-consider their former orders."

The Hon'ble MR. CARLYLE said:—"The points on which I propose to touch relate to Police Reform, the Provincial Service, the Subordinate Executive Service, the Registration Department, Agricultural Expenditure, Village Banks and the Veterinary Department.

"As regards Police Reform, the Hon'ble Member has suggested that, if twelve lakhs, the grant from the Government of India will not suffice to carry out the reforms outlined by the Government of India for 1905-06, this grant should be supplemented from Provincial Funds. The Government of India lay down the following order of precedence for reforms to be introduced this year:—

(1) The strengthening of the Armed Police Reserves.
(2) The improvement of the pay of Constables.
(3) An increase in the number of Sub-Inspectors and the raising of their minimum pay.

"I am glad to be able to inform the Council that the funds placed at our disposal are sufficient to cover not only these but several other reforms, and that there is no necessity for supplementing the grant from Provincial Funds.

Armed Police Reserves.—As regards the Armed Police Reserves, it will not be possible to appoint Inspectors and Sergeants to any district armed reserve, - in a good many places it will be necessary to build quarters. -

"*Constables.*—There will be a very substantial increase in the pay of constables. The pay of all constables will be raised to the minimum of their district. This will vary from Rs. 7 to Rs. 9 in different parts of the Province. (The present minimum varies from Rs. 6 to Rs. 7.) The average minimum rate of pay throughout Bengal will be approximately Rs. 8. In addition to this, every constable who has served for three years in a grade will get an addition of Re. 1 to his pay. For Calcutta the minimum pay of constables is to be raised to Rs. 10. In Bengal generally no deductions are at present made on account of the pension of constables and officers. In Calcutta there is a Police Superannuation Fund to which officers and men serving in the Police contribute. Steps are being taken to wind up this Fund and put the Calcutta Police on the same footing in this respect as the District Police.

"*Constables' Training Schools.*—I may mention that though the Government of India have not prescribed it for this year, funds will permit of the establishment of two training schools for constables through which recruits will pass. The training will last six months, and will include drill, an elementary knowledge of law, instruction in the duties of constables towards the public and the training of their powers of observation.

"*Sub-Inspectors.*—The present minimum pay of all Sub-Inspectors is Rs. 30 and the maximum pay is Rs. 80. The minimum pay will be raised to Rs. 50 and the maximum to Rs. 100. The number will also be increased by 130 or more so as to enable us to provide at least one Sub-Inspector for each investigating centre. Arrangements have already been made by the Inspector-General of Police for the accommodation and training of these officers at the Bhagalpur Training School. Before I leave this subject I must refer to the Hon'ble Babu Ambika Charan Mazumdar's complaint that they are no longer to be recruited by competitive examinations. I can say from personal knowledge that we are now getting a far better class of men by nomination than the few who still enter by competition.

"*Head Constables.*—Among reforms not prescribed for this year I hope it will be possible to deal with the case of head-constables and that the minimum pay of head-constables will be raised from Rs. 10 to Rs. 15. It should also be possible to give those who have served more than a certain time in the two lower grades promotion. I hope we will also be able to recruit more men so as to hasten the replacement of writer-constables by writer head-constables.

"*Constables.*—Besides the increase of pay, it will also be possible to make considerable additions to the number. A considerable number of the present low-paid and very unsatisfactory class of town chaukidars will be replaced by town constables.

"*Sub-Inspectors.*—I have already mentioned that 130 Sub-Inspectors are to be recruited in addition to the men who were recruited towards the close of last year.

"It would be possible with the funds at our disposal still further to increase the number of men and officers recruited, but it could only have been done at the expense of the quality of the recruits. I understand from the Inspector-General of Police that a very good class of candidates is coming forward for recruitment to Sub-Inspectorships, but if we were to take more than a certain number, we would have to take men of an inferior class. I look upon it as a matter of the first importance that our Sub-Inspectors should be men not merely educationally qualified, but with such family connections and training as to make it easier for them to resist the temptations to resort to corrupt practices which are so frequent in the police.

"*River Police.*—Among reforms which though not specifically prescribed for next year are yet apparently considered very urgent by the Government of India is the introduction of a proper system of River Police. A Police Officer (Mr. Bramley, District Superintendent of Police, Benares) has been placed on special duty to draw up detailed proposals, and a commencement will I hope be made this year.

"*Criminal Investigation Department.*—Another reform which I understand the Government of India will allow us to undertake this year is the formal constitution of a Criminal Department under a Deputy Inspector-General, who will also deal with Railway Police. A commencement has already been made and the operations of the Department have met with considerable success, but it has been carried on under great difficulties, as the Deputy Inspector-General in charge (Mr. Knyvett) had to carry on the work in addition to his own duties.

"As the measures I have already detailed will not exhaust the funds at our disposal, I hope it will be possible to get the permission of the Government of India to make a commencement as soon as possible of the formation of the Provincial Police Service. I look upon this as one of the most important measures of reform advocated by the Police Commission and accepted by the Government of India and the Secretary of State. Another reform which, I hope, it may be possible to secure is the raising of all Inspectors' pay to the minimum accepted by the Government of India of Rs. 150. I hope also it may be possible to promote Inspectors who have been serving for some time in a grade. Again, as regards Assistant Superintendents of Police and District Superintendents of Police, I hope we may be able to obtain permission during the coming year to raise their pay to the minimum proposed by the Police Commission.

"I think that, very naturally, considering how short a time the scheme has been before the public, there has been some misunderstanding as to the exact effect of the measures stated in the Government of India Resolution on the prospects of Indians entering the Police Service. It has even been said that, so far from these prospects being improved, they are now worse than they were before owing to the fact that men promoted from the Provincial Service to become District Superintendents of Police are to be treated on a different footing from the District Superintendents of Police recruited from Europe. It is quite true that the man who has risen from the ranks to the post of District Superintendent of Police has hitherto been theoretically qualified to rise to the same maximum pay as his colleagues who are appointed at Home. But, as a matter of fact, an officer is fortunate if he reaches the lowest grade but one by the time he is 55 when he in the ordinary course retires from the Service. Under the altered state of things, any officer appointed direct to the Provincial Police Service and who is selected for appointment as District Superintendent of Police may confidently expect to attain the highest grade open to men appointed in this country on Rs. 900 a month. Men who have worked their way through the ranks will not, in all cases, be able to reach this grade, but they will commence on Rs. 600, the highest pay to which they can now hope to attain.

"I must also again remind the Council of the great opening afforded by the Provincial Police Service independent of any prospects of promotion from it. I may add in conclusion that though there are excellent Indian officers in the force, I do not believe any radical reform is possible unless the superior staff is mainly recruited from Europe.

"I will now pass from details and make a few general remarks on the subject of Police Reform. The Police Commission found, and I do not think that any one in Bengal can honestly deny the correctness of their finding, that there is an enormous amount of corruption and inefficiency among the lower grades, and that, while there are many excellent officers in the higher grades, the average is not up to the standard required if police work is to be well done. It is obviously impossible to stop corruption in the lower ranks by merely raising the pay. It is not reasonable to expect, for instance, that because a constable's minimum pay is raised from Rs. 6 to Rs. 8 he will therefore straightway become an honest man. But, at all events, by raising his pay Government has done its duty. He will receive what is, at best, a living wage and he cannot plead necessity as an excuse for dishonesty. I do not think the comparisons made by the Hon'ble Mr. Chaudhuri are in point. He has left out of view, for instance, the fact that their service is pensionable. He has perhaps

also forgotten in Calcutta the minimum pay will be Rs. 10. As regards the travelling allowance at all events a beginning has been made. In the case of higher appointments, such as that of Sub-Inspector, we hope by raising the pay to attract a well-connected and well-educated class of men. We have fortunately even now many such men in the service, and I hope that, in future, though they may be educationally inferior to our Deputy Collectors and Sub Deputy Collectors, they will come from the same class of society. If we succeed in getting such a class of men, I think there can be no doubt that these recruits from the upper middle classes of Indian society will behave in a very different way from many of their predecessors.

"As regards the ranks of the Assistant Superintendents of Police and District Superintendents of Police, they already contain many excellent officers whom it would be hard to better under any system, but there are a certain number below the average required for the difficult and important work of District Superintendent, and the number of such officers will, I hope, be greatly reduced, as under the terms now offered, men with better educational qualifications should in future be recruited in England.

"Turning to the Provincial Executive Service, no one can regret more than the Chief Secretary the fact that this Government has been unable as yet to obtain the addition to their number it considers necessary. I have had constantly to refuse what I considered the most reasonable applications for additions to the ordinary staff on account of urgent and pressing work simply because I had not the men to send. I have at other times, and this I still more deeply regret, been obliged to refuse well-earned leave to men simply because they could not be spared. The Government of Bengal has corresponded for some time with the Government of India on the subject of increasing the cadre, and the Government of India has in principle admitted the justice of our demands for a larger service. But fuller information has been called for as to the actual details of the number required. This information we submitted in January, and I hope before many months we will have received the sanction of the Secretary of State to a very large increase to the numbers of the Provincial Service.

"As regards the Subordinate Executive Service, I am glad to say that the proposals of the Government of Bengal have been accepted by the Secretary of State in full except as regards a few settlement appointments in connection with which further information is required. I hope that early next month the full number of extra men now sanctioned will have been appointed. The increase is very considerable. Including Deputy Superintendents of Excise, who are to be graded separately in future, the number has been raised from 105 to 225 men.

"As regards the complaint that competitive examinations have been abolished, I would refer to the Government Resolution which shows how limited competition was before, and that all that has been done is to substitute for the appointment of a small number by competitive examinations nomination by the Syndicate of the Calcutta University.

"One very important and most desirable result of the increase in the cadre will be that, when full effect is given to the proposals of the Bengal Government, it will be unnecessary to employ any outsiders or kanungoes as Assistant Settlement Officers.

"In this connection I cannot accept the views of two Hon'ble Members, Babu Bhupendra Nath Basu and Babu Saligram Singh, that the initial pay is insufficient. The number and quality of the candidates who now come forward show that the appointment of Sub-Deputy Collector is one much coveted by many well-educated and respectably-connected young men. A great boon has been granted by the creation of a grade on Rs. 250 for officers who have worked fairly well but who are not fitted for promotion to the Provincial Service.

"I now turn to the Registration Department. As regards this Department, final orders are awaited, but proposals have been submitted and generally

accepted by the Government of India to place it on an entirely different footing and to pay Sub-Registrars by salaries instead of by commissions. It is also proposed to give a considerable increase of pay to the Sub-Registrars' clerks. Service in the Department will, if the proposals are accepted, be pensionable. The Registration Department, when once the scheme has been introduced and is in full working order, will no longer be the refuge of odd worn-out pensioners, and I have no doubt it will be found possible to utilise the rural Sub-Registrars in many ways, as registration work does not in most cases take up a Sub-Registrar's full time.

"Under the head of 'Land-Revenue expenditure,' I note the following items:—

Provision has been made of one and-a-half lakhs for Sundarbans reclamation work. Government is now trying the experiment of dealing direct with the raiyats, clearing the land and maintaining all necessary drainage and embankment works. So far the experiment promises to be very successful.

"The Government of India propose to distribute a large grant for Agricultural Experiments. The details are not yet settled, and I can only give a general idea of what is proposed. A few properly-equipped experimental farms, two to commence with, are to be started. Attached to these there will be a number of demonstration farms, each of which will as a rule only deal with one experiment which has been tried and found successful at the experimental farm. The object of these demonstration farms is to show the cultivators the effect of thoroughly-tested improvements.

"Rupees 50,000 has been allotted for experiments with a view to effecting improvements in the growth and manufacture of Indigo. It is to be hoped that the result of these experiments will be to prevent the extinction of a very important industry.

"Rupees 5,000 has been provided for the distribution of selected cotton seed. It will recognise the importance of doing what is possible to improve the quality of the cotton grown.

"Rupees 25,000 has been allotted for work connected with Co-operative Credit Societies. So far only a very small beginning has been made, but in Eastern Bengal at all events it seems probable that things are ripe for a early development of such societies on sound principles. Mr. Gourlay, the Registrar, reports that in the districts he visited he found the prospects very encouraging.

"Rupees 67,000 has been provided for a new Hostel at Belgatchia and various improvements.

"Rupees 17,000 additional expenditure is to be incurred in increasing and improving the Veterinary Establishment. This is only part of a large scheme which is still under consideration."

The Hon'ble MR. K. G. GUPTA said:—"Sir, I wish to say a few words with reference to the remarks made by Hon'ble Members regarding one or two Departments with which I am connected. First, with reference to Income-tax, the Hon'ble Babu Ambika Charan Mazumdar has drawn attention to the very large increase in the number of assessees in the present lowest class. The figure of increase standing by itself seems apparently very unsatisfactory and somewhat damaging to the assessing agency, but when it is closely analysed it will not look so bad as it appears. The assessees of every class are divided into several heads according to the sources of income, *viz.*, Government servants, servants of local bodies and private employés either belonging to individual employers or to companies and other bodies and traders and others. As far as the assessing agents are concerned, their chief work lies in assessing traders and other people who do not come under the various heads of servants. In their case also there has been an increase, but that increase is a very small one compared with that which has taken place in the case of servants of different sorts, regarding whom there can be no suspicion of over-assessment. For instance, comparing the figures of 1902-1903 with those of 1903-1904 and

confining our attention to the new last class of assessees, we find that in the case of Government servants there is an increase of 50 *per cent.* and in the case of servants of local bodies an increase of 216 *per cent.* In the case of servants of private employers and of public bodies and companies it is 115 and 195 *per cent.* respectively, whereas in the case of traders and other people with whom alone the assessors are concerned the increase is only 36 *per cent.* An obvious explanation is that in the previous year there was a still lower class which had to pay Rs. 15 income-tax and that has been abolished; the difference of tax was only Rs. 5. The classification is now done with more care because the fact of one's falling within one class or another is a question of total exemption or paying Rs. 20; and this apart from the normal growth of wealth. However, further enquiry has been ordered by the Board, and no doubt when the reports are received the matter will be made clear, but in the meantime I wish to draw the attention of Hon'ble Members of the Council to these figures so that they may not summarily condemn the assessing agency of having shown excessive zeal or of having attempted to undo the benevolent intentions of Government.

"Coming now to 'Excise.' That is a department with which in some shape or other I have been connected for a long time, and that is also a department which is more subject to misrepresentation and misunderstanding than perhaps any other Revenue Department under Government. Some people seem to think that a mere increase in the Excise receipts is in itself something atrocious, something to be deprecated and absolutely wrong, but I do not think that is a reasonable way of looking at the question. Short of total prohibition, which I fancy is not within the range of practical politics, all that the Excise Department may be expected to do is to see that undue facilities are not offered for obtaining intoxicants and that the prices of stimulants are kept reasonably high. With regard to these two points I wish to draw the attention of the Council to some facts and figures which will speak for themselves. I wish to compare the year 1874-75 with the year 1903-1904. For the year 1904-1905 we have not yet got complete statistics. I have chosen the year 1874-75 because that was the first year after the separation of Assam from Bengal. In 1874-75 the number of country spirit licenses in Bengal was 5,165, against a previous quinquennial average of 6,312. In the last year, that is, 1903-1904, the number of such licenses was only 3,382. Similarly, *ganja* in 1874 75 was 4,394 and last year it was only 2,793 and opium 3,836 in the former year and 1,716 in the last year—and all this in spite of a very great increase in population. Coming to the rate of taxation, we have as regards *ganja* during the period a rise from Rs. 3·4 to Rs. 15·1 per seer and opium from Rs. 17 to Rs. 28 6 per seer. These are the facts for the whole of Bengal; and with regard to Calcutta specially, which generally excites a larger amount of attention than any other part of the country, I may say that the population of Calcutta during this period has increased by 6 · *per cent.*, and yet the number of spirit licenses has increased only from 136 to 137, that is, by one. It has been further reduced in the current year; *ganja* remains the same—at 63. Opium is reduced from 65 to 60, but the incidence of revenue has in every case been largely raised. With these facts before us I do not think it would be reasonable for any one to charge the Excise Department with trying to raise revenue at the sacrifice of temperance. The subject of country liquor has been fully discussed by the Hon'ble Mr. Baker in the Supreme Council and it is not necessary for me here to dilate further on the subject.

"There is another matter to which I have to refer because I have been made the subject of an attack not merely outside this Council, but even here with reference to the part I took in connection with the Committee which was appointed for devising a scheme for improving Rural Education. The object of the Committee was simple and harmless enough, and I might also claim for it that it was an object laudable in itself and which I find every one almost has in view. It has been the experience in Bengal for many years that Primary Education has not permeated the lowest classes of the people, and that the masses and the great body of cultivators are still unaffected by it, and therefore Government very naturally considered it necessary to find out the causes of

this failure of Primary Education to reach the very lowest classes and to see what could be done to remove the defect.

"A Committee was appointed of which I happened to have the honour to be a member. After a prolonged discussion and considerable deliberation the Committee drew up a scheme which met with the provisional approval of Government, but it was not finally passed pending an expression of opinion by the public and other persons interested in Primary Education. That scheme as a whole I do not find is condemned by anybody: on the contrary, the main outlines of it have received general approval. There is, however, one point of detail, which has elicited much adverse criticism. In this respect what we wanted to do was to find out a medium which would be easily understood by the people for whom the text-books were to be prepared. The Committee have been commended for lightening the burdens of the primary scholars by simplifying the course and reducing its scope, but they have been found fault with because they went further and wanted to make the medium also as simple and as plain as possible. The Committee may have been mistaken, and I as one of the members of that Committee may have been mistaken, but it is quite open to the public to give full expression of their views and not only to criticise what we have said or done but also to show the best way of achieving the object, which we have all in view. If we have not done the right thing, or if we have erred, I do not see why it should stir up so much warmth or passion.

"All of us have the same object in view. We want to make Primary Education available to the very lowest classes who cannot now acquire it because of the complexity of the course, the difficulty of the text-books and other causes. We tried to simplify matters. We tried our best to find out a way by which such education could be made available to the classes for which it was intended. As I have said, we may not have done the right thing, but surely the subject is still open to discussion. There is no sinister motive anywhere. Government fully realised the necessity of the subject and has submitted the proposed scheme to the deliberations of those who are interested in education. With that object it has published the whole scheme and invited full discussion. Then why all this vituperation and invective? What I have to urge is this: the Committee have drawn up a scheme; if there are any defects in it, by all means point them out; and the Judicial Secretary has already given us the assurance that the objections will be duly and fully considered before final orders are passed."

The Hon'ble the PRESIDENT said:—"Gentlemen—I congratulate my hon'ble friend Mr. Shirres on the generally favourable opinions which have been expressed regarding his financial statement. Matters connected with the budget have, as a rule, been already dealt with by the Hon'ble Members representing the various departments concerned, and I shall not therefore trouble the Council by entering into details. I am half tempted to speak of the importance of our proposals for re-organising the staff of Deputy Collectors and Sub-Deputy Collectors and improving the position of Ministerial Officers. But these have been sufficiently dealt with. We have carried through one of the measures; and the other two will, we hope, not be long delayed. The criticism of the Hon'ble Babu Bhupendra Nath Basu regarding the character of the Settlement effected with the Government of India last year has been, it seems to me, fully answered by the Hon'ble Mr. Shirres and also by two of the non-official Members of this Council; on that also I consider it unnecessary to say anything now. I shall confine myself to a few remarks regarding general questions which have been raised in the course of this discussion.

"I would first of all refer to the complaint of the Hon'ble Babu Ambika Charan Mazumdar and others that too short a time has been given for the consideration of the budget after it was laid on the table and before its discussion in the Council. On this point I will only say that if any blame attaches to any one it is to myself. The ordinary practice has been to allow one week from the date of the presentation of the budget to the date of its discussion. In

this the practice of this Council conforms to the practice of the Government of India; and it can hardly be urged that more time is required to master the details of the Provincial Budget than is required for those of the Imperial. I accordingly fixed to-morrow as the day for the discussion of the budget this year. I have, however, an important and most pleasant duty to perform to-morrow in being present when His Excellency the Viceroy lays the foundation stone of the Pusa Agricultural Research Institute; and I was compelled therefore to alter the date which I had fixed. I then fixed on to-day, simply because I thought that Hon'ble Members would probably like to take up the discussion of the budget as soon as possible, and because I had no idea that it would take them long to master its details. I would remind the Hon'ble Member that, at the close of our meeting last week, he came into my room to make a representation in regard to a matter in which he is interested. Had he said anything to me then about the difficulty of being ready for the discussion to-day, it would have been far more convenient to me, and would have given me great pleasure, to have postponed the discussion for, say, ten days instead of six; but he gave me no hint of anything of the kind. I mention this merely as an illustration of what I think a better method of making representations. It is better to prevent anything that may be deemed a hardship than to complain of it after it has been permitted to occur. I am sure that Hon'ble Members will admit that they are usually treated with courtesy and consideration; and this I think should encourage them to make a representation regarding any inconvenience to which they feel that they are being put rather beforehand with the view of prevention than later in the way of complaint. I shall be very glad to give a longer period next year. In this connection I may be permitted to refer to a remark made by the Hon'ble Babu Bhupendra Nath Basu that 'questions receive little encouragement in this Council.' I am bound to say that I heard this with surprise. The Hon'ble Members who have to answer interpellations made in this Council consistently aim at giving clear and full information, and never return evasive answers. Of course, there must occasionally be questions put which cannot be answered satisfactorily. But the treatment of interpellations in this Council is habitually courteous and considerate.

"The next subject to which I should refer briefly is the subject of Education. First of all, I join with Hon'ble Members in an expression of our thanks to the Government of India for the recurring grant of Rs. 10 lakhs *per annum* to the Provincial revenues of Bengal to meet increased expenditure on Primary Education. The Governor General in Council has expressed his desire that this grant shall be fully utilised in increasing the normal allotment for Primary Education; and measures have been taken to ensure that expenditure hitherto incurred will not be discontinued on account of this grant, but that there will be, to the extent at least of this grant, an increase of expenditure on Primary Education. It has been found by experience that it is not easy for a Local Government to resist the strong claims which are made upon its resources by those who are interested in desirable improvements and who can make themselves heard. Primary Education in Bengal is in a very unsatisfactory state—more so, in some respects at least, than in other parts of India—and yet the demand for reform is less clamorous than with regard to matters of less importance. The subject has been attracting our attention for some time, and schemes have been formed for the development of Primary Education, in respect of which we had a strong hope that the Government of India would give us some assistance, and which we could not have carried out without the substantial contribution which has now been made to our finances. It has been pointed out already that the money will be mainly spent on buildings for primary schools, which are worse in Bengal than any I have seen in almost any other part of India; in helping primary education among Muhammadans; in carrying out the effective scheme for rural primary schools; in providing training schools for primary teachers; and in a substantial increase of the subordinate inspecting agency. Our hopes as to receiving substantial assistance have been more than realised; and we trust that there is now before us an era of progress and development in Primary Education.

"It has been pointed out by the Hon'ble Mr. Shirres that the provincial grants for Education in this Province have very materially increased of late years. While we are pushing on primary education, we do not intend to neglect our duty in regard to the higher stages of education. I do not, however, intend to detain the Council by remarks on this subject. All that I need say is this, that I am greatly encouraged by seeing the attention which is being paid throughout the province generally to Secondary Education on approved lines, and also by the interest which is being taken in the development of University Education. I think it is a cause for great satisfaction that there is so much of a spirit of co-operation among official and non-official teachers and others interested in University Education in regard to the drawing up of the regulations for the new University. I am glad also to find the Hon'ble Babu Bhupendra Nath Basu taking this opportunity of giving his support to the Ranchi College scheme, and of suggesting improvements in the Presidency College on lines which commend themselves thoroughly to me. I congratulate the Ranchi College Committee on the subscriptions which have been made practically unsolicited towards the scheme. No great effort has yet been made to raise subscriptions, and yet they have nearly reached rupees two lakhs. I am sure that the scheme appeals to the feeling of many throughout the Province, who desire a sound University education for their sons. As to the suggestions made regarding the Presidency College, I shall see that they receive early and careful consideration from the educational authorities. That very considerable improvement is required in regard to the important matters of accommodation for the students and bringing them more into contact with their Professors I have no doubt whatever; and I shall be very glad to consider, in consultation with my official advisers and with others interested in higher education, the steps which should be taken to secure such improvement.

"I should like to say that I sympathise very much with what has fallen from my hon'ble friend Mr. Larmour regarding technical and industrial education. It has been pointed out to him by the Hon'ble Mr. Carnduff that the matter has certainly not been entirely neglected, and that interest in it and attention to it are increasing. It is a matter which receives anxious consideration at the hands of this Government. I have been interested by the remarks which have been made by the Hon'ble Babu Saligram Singh regarding the Temple Medical School at Patna. He is anxious to have it raised to the status of a College, so that Biharis may be induced to avail themselves of a higher medical education and prepare themselves for the higher grades of the medical service or profession. I need hardly say how deeply I sympathise with him in this desire of his. But he will understand quite easily that it is impossible to give him any definite promise at the present time. It is necessary that such a question as this should be very carefully considered. It is by no means without difficulty. Three important points have to be considered. The first is the effect which would be produced on the attendance at the school or college by raising the educational standard of admission. It would, I fear, be impossible to lower the standard of admission to Medical Colleges generally, so as to meet the case of this Bihari College; and I am afraid that there might be some difficulty in getting a sufficient number of students for a Medical College at Patna possessing the prescribed educational qualifications. This is a matter to be enquired into before any decision on the question can be arrived at. Another point is whether the expenditure which will be required for securing the Professors necessary to teach medicine and surgery in the College would be justified by the probabilites in respect of the outturn of men qualified to be graduates in medicine. This also requires enquiry and consideration. Thirdly, there is the fear that the opportunities for clinical instruction in the hospitals of Patna are not adequate for the training of graduates in medicine. As the Hon'ble Member is well aware, I have recently taken steps greatly to improve the hospital which is connected with the Temple Medical School at Patna; but I am not certain that it is even now adequate for the purposes of a college. There are great advantages in having medical education imparted in a great city where there are first rate hospitals. At the same time as I have said I sympathise with the object that the Hon'ble

Member has before him; and the suggestions which he has made will receive the fullest consideration.

"Before leaving the subject of Education I should like to say one word about the Resolution regarding Primary Education published last month, which has been referred to by more than one Hon'ble Member. I have received already many criticisms of that Resolution. On the scheme as a whole criticisms are generally favourable. There is, however, one point to which special exception is taken, namely, the proposal to prescribe text-books not only in the different languages of the province, but also in the different dialects prevailing in different districts. The object which the Committee, which was appointed to report on this subject, had before them, was to simplify Primary Education for the rural population, to render the text-books and means of instruction more intelligible to country people. I need not refer to the altogether baseless insinuation that there was any intention of breaking up the languages of Bengal, and of establishing what has been figuratively called an educational tower of Babel. The object of the Committee was entirely sound. Whether their proposal was sound or not, is another question. Their judgment may have been at fault. In regard to that point, as well as in regard to other features of the scheme, the frankest criticism was invited by the Government. The remarks which have been made by Hon'ble Members to-day will be carefully considered, in connection with the many other temperate representations which have been received in regard to this matter; and I earnestly trust that we shall be led to a decision which will be to the advantage of the people and commend itself to the intelligent sentiment of those who are interested in Education.

"I should like to turn for a moment to the remarks which have been made by the Hon'ble Mr. Larmour regarding the 'paying ward' in the Presidency General Hospital. This was a matter in which my predecessor, the late Sir John Woodburn, was very deeply interested. It was brought to my notice very soon after I assumed charge of my present office by my friend Sir Montague Turner. I have received very substantial financial assistance from the European community; and I am now able to carry out the project. It is a pleasure to me to think that it has commended itself to the Council. The suggestion which has been made by the Hon'ble Raja Ban Behari Kapur that a similar 'paying ward' should be attached (say) to the Medical College Hospital for the reception of Indian patients, is one which commends itself to my sympathetic consideration. I know, from enquiries which I have already made, that many patients coming in from the country for treatment in Calcutta are not only compelled to incur great expenditure for house accommodation as well as for professional fees, but are also exposed to very undesirable conditions in respect of their surroundings while under treatment. I should like very much therefore to do something in the way of providing either a paying ward attached to one of our best hospitals, or a nursing home, where such patients from the interior or even perhaps from the city itself might be accommodated. If a reasonable scheme can be devised, I shall be very glad to assist in respect of the initial cost, the charges of maintenance of the institution being of course met by payments made by the patients. I shall immediately appoint a Committee of European Doctors and of representative Indian gentlemen to consider the matter and see whether they can propose a reasonable scheme.

"I should like also to say one word in regard to what Mr. Apcar has said about the Calcutta Nurses' Institution. I am quite ready to agree to an increase in the maximum contribution from Government towards this most valuable institution from 37½ thousand rupees to fifty thousand rupees, on the same condition as exists at present, namely, that the Government pays Rs. 3 for every rupee subscribed. As to the proposal that a contribution should be made from the Hospital Port Dues Fund, I do not, as at present advised, see any objection. Section 50 of the Indian Port Act, 1889, seems to me to authorise such contribution. The matter however requires further consideration. I should be glad if the Hon'ble Member, as President of the Institution, will formally apply for a contribution.

"Before leaving the discussion of medical subjects I should like to say that the remarks which have been made about the mortality from malaria have not fallen on unsympathetic ears. The matter already engages our attention. I shall not discuss it now; but I promise that we shall not fail to do what seems to us possible to wrestle with this powerful enemy.

"Another subject to which I should like to refer is the grant which has been made to District and Local Boards by the Government of India. The grant is approximately equal to one quarter of the amount which these Boards derive from local cesses on land. The allotment to this Province is 12½ lakhs. The assignment from Imperial to Provincial revenues will be a fixed one, whereas the future assignments to the Boards, being calculated at one quarter of their receipts from cesses on land, will necessarily undergo a gradual increase. I have no doubt that the Local Government will be able to meet from its growing revenues the small additional expenditure involved. At the outset the distribution of the grants will be at the discretion of the Local Government; since some Boards may at present be found to be in a financial position which would render it unnecessary to give them the full additional 25 *per cent.* on their land cess receipts, while others again may be able to spend with advantage more than the amount which would fall to them under a system of proportionate distribution. Later on, however, it is intended to make the distribution rateably to all Boards. The financial history of the Boards in Bengal illustrates the danger of assigning stationary or inelastic revenues to meet expanding charges. The result has been that the financial position of the Boards has been exceedingly unsatisfactory. There has been a tendency on the part of some of the Boards, which it has been very difficult for Government to resist, to divert the Road Cess to purposes for which it was not intended. Instructions have frequently been issued to prevent this; and grants have been given to the Boards during recent years which have in the aggregate amounted to more than the sums thus diverted. But these grants have not been systematically made; nor has it been possible to resist the diversion of funds by some of the Boards. This matter will now be effectively dealt with and disposed of on right and equitable lines with something like finality. The Boards will now be able to make more adequate provision for communications, medical relief, schools, water-supply and sanitation, and veterinary aid to cattle. More interest will be attached to the administration of local affairs; and no doubt more effective work will be done. I earnestly trust that this measure will give a very marked impulse to Local Self-Government. Perhaps I may be permitted here again to say that one of the objects of the Local Self-Government is policy, to secure the co-operation of Government officers, local bodies and the public-spirited among the people. I well remember the discussions when the great development in Local Self-Government took place some years ago. I was deeply interested in the matter; and I happened to occupy a Secretariat position in my old Province which gave me a great deal of work to do in connection with it. The co-operation of the Government, the local leaders of the people, and the beneficent among the people themselves, was one of the principal objects which promoters of the scheme had before them. There are matters which must be dealt with by the Government alone; there are other matters which must now be dealt with by the Local Boards; and there are private charities with which neither can interfere. But there are many matters in which two or more of the three agencies for good in the country, to which I have referred, may well co operate together.

"I should like to say one word about Municipal matters in Calcutta. I do not think it necessary to refer to the remarks that have been made about the views of the Local Government in regard to the work of the Corporation during the last year. What it has been necessary for me to say has been fully enough said. Neither do I consider it necessary to add anything to what has been said by the Hon'ble Mr. Shirres about the possibility of giving a provincial grant for the improvement of Calcutta. I shall only say one word about the remarks made by the Hon'ble Babu Bhupendra Nath Basu and the Hon'ble Mr. Greer about decentralisation of Municipal work in Calcutta. I cannot at present stand committed to any view in regard to this most important

subject. *Primâ facie*, it is undoubtedly desirable to decentralise. The work is enormous; and we lose a great deal of local agency by endeavouring to do the work by the central authority only. Clearly, however, the question is not a simple one, and requires very serious consideration. I have already therefore taken steps to appoint a representative Committee of experienced officers and non-officials to advise me on this matter. I have also asked one of its members to study the question in London, Berlin and Paris, and see what has been done in these great cities in the way of decentralisation of Municipal work. When the report of the Committee has been received, I shall proceed to deal with the matter as promptly as possible.

"I come now to the important subject of the improvement of Police. It is a matter of great satisfaction to me that all the most important proposals of the Police Commission have been practically accepted by the Government of India and the Secretary of State. They involve very great expenditure. Necessary reform would have been impossible to Local Governments without assistance from Imperial finances; and I am glad that the same spirit which led the Government of Lord Curzon to appoint the Police Commission to make a thorough and comprehensive enquiry into the condition of the Police. has also led to their rendering substantial assistance to Local Governments in carrying out the reforms which had been found to be necessary. The Government of Bengal has received a recurring grant of Rs. 12 lakhs *per annum* to enable it to meet the additional expenditure on Police arising out of the recommendations of the Commission. The Hon'ble Mr. Carlyle has explained to you how this money is to be utilised; and I shall not trouble you with further details in this matter. Our proposals have so far been already worked out; and we shall begin to carry them into effect as soon as possible.

"Passing from these details, however, I desire very briefly to refer to certain criticisms which have been made about the proposals of the Commission in respect of European officers and the formation of a Provincial Service. I heard on Wednesday my hon'ble friend the Maharaja of Darbhanga express his regret 'that it has been found necessary to close the doors of the new Imperial Police Service to Indians and to relegate them to a Provincial Service with the designation of Deputy Superintendent of Police.' What one would gather from such a statement as this is, that the Police Commission had recommended a retrograde measure, that they have proposed to exclude Indians from positions which they now occupy and to employ them less freely in the superior grades of the police. The Maharaja knew better; and he had doubtless no intention of saying anything of the kind. It is not to be wondered at, however, that such an impression should be created; and it has found utterance in the remarks of some of the Hon'ble Members of this Council. I think, however, that a perusal of the report of the Police Commission will show that this is entirely a misconception. I should like first of all to state the case as it at present stands. We have a few Inspectors of Police promoted to the charge of districts: one or two in some of the provinces. But these gentlemen are promoted from the lower grades of the service generally at a time of life when the energy that is required for police work in a district can hardly be expected of them. At the very end of their service, when they might reasonably hope to be allowed lighter work which would tax less their physical frame, they are promoted to work of a most exacting kind. This plan has not worked either to the satisfaction or to the credit of the force. Men have been promoted to be Superintendents too late to rise to any but the lowest grades, and too late to discharge satisfactorily the duties of the office. What the Commission proposed was that a Provincial Service should be created similar to the Provincial Service which has answered so admirably in the executive work of districts; that Indian gentlemen of education and position, or of approved service, should be appointed Deputy Superintendents of Police on pay ranging from Rs. 250 to Rs. 500; and that officers should be selected from amongst these for promotion to the charge of districts on pay running from Rs. 600 to 900. This is a new departure altogether. It is the creation of such a service as ought to secure some of our

best Indian gentlemen for police work, just as the Provincial Service has secured a class of men for district work, generally so admirable. The Government of India have fully accepted these proposals of the Police Commission, with this exception that they have decided that promotion to district charges cannot be allowed until fitness is fully established. I have no objection to raise against this proviso. I believe that many a good scheme is wrecked from being carried out too hastily. I am quite confident that men will be found fit for the charge of districts among Deputy Superintendents; and I am, by no means, unwilling to postpone pressing for their appointment until their fitness is fully established. On the other hand I am clearly of opinion that for the present at least the great majority of our Superintendents must be Europeans. As the country moves forward and caste, religious, and race prejudices and antipathies become less accentuated, it will no doubt be possible to increase the number of Indian Superintendents. But surely the best plan for securing all this, is to say that so long as we require Europeans we shall recruit them on a method which will secure the best Europeans we can get; and we shall pay them salaries which would induce good men to leave their own country and incur the disadvantages and increased expenditure of service abroad. At the same time, while we shall hold out inducements to Indians that will be fully adequate to secure good men of that class, it is unnecessary to pay them as much as we must pay Europeans; and the mere fact that they will draw less pay will be a permanent inducement to Government to increase the number of Indian Superintendents as soon as men of established fitness are found available. I confess I find myself unable to accept as deserved the adverse criticisms which these proposals have received from those who profess to be animated by a desire to advance the interests of the Indian people and of efficient police administration.

"In conclusion I should like to say one word in regard to the abolition of competition for the Provincial Service. There is no doubt that the progress of education has rendered it possible to demand high educational qualifications from candidates for the Provincial Service. The state of things which existed before the Bengal Government dealt with the question of recruitment for this service in its last Resolution was this. There was a competitive examination. Only three candidates were selected purely by competition after necessary enquiries had been made in regard to their physical fitness and their moral character. Other candidates were appointed not by competition but merely by selection from amongst candidates who had qualified at this examination. It seemed to me and to a very large body of officials and non-official gentlemen (the majority of whom were Indians) whom I consulted, that it was quite unnecessary to have a special competitive examination in a province where we had only one University, and that the better plan would be to appoint candidates not because they have qualified in the special test but because they have qualified in the University. It is far better evidence of educational fitness and of strength of character to hold a degree in a University than to qualify in a single competitive examination. So that men might feel that it was possible to fight their own way into the service, we agreed to request the Syndicate of the University to assist us in the selection of three candidates who should be the best candidates of their year in the University. For the rest, instead of leaving the selection to the Lieutenant-Governor and his staff at head-quarters, we called upon the Commissioners to nominate candidates who had obtained University degrees, so that men might be appointed who had not only shown what we regard to be a better educational qualification than the mere passing of a competitive examination, but who should also be known to responsible officers as men likely to make good public servants. That is the change which has been introduced in Bengal; and it has been introduced with the full approval of the Government of India. It seems to me that the result will necessarily be to encourage education, and in all human probability to secure a better class of Government servants. The picture drawn by the Hon'ble Babu Bhupendra Nath Basu of the development of sycophancy under this scheme does not

alarm me much. It proceeds from failure to appreciate how good students are watched in the neighbourhood of their homes; and it implies a lower estimate of the character of Indian gentlemen in the mufassal and of their relations with local officers than I am prepared to accept.

"The Council will now be adjourned to a date to be notified hereafter."

CALCUTTA;
The 4th April, 1905.

F. G. WIGLEY,
Secretary to the Bengal Council.

APPENDIX TO

The Calcutta Gazette.

WEDNESDAY, APRIL 5, 1905.

NOTICES TO MARINERS.

THE following Notices are published for general information.

W. A. INGLIS,
Secretary, Marine Department.

CALCUTTA, *the 1st April 1905.*

CHINA—SOUTH-EAST COAST.

Cape of Good Hope—Wreck to the south-eastward.

No. 103 (first publication).—The British Admiralty has given notice (No. 163 of 1905) that the wreck of the S S. *Workfield* lies sunk in a depth of 18 fathoms in a position from which Cape of Good Hope bears N. 45° W., distant about 15 miles.

Approximate position, lat. 23° 3½′ N., long. 116° 59½′ E.

(*Variation Nil in 1905.*)

This Notice affects the following Admiralty Charts:—Formosa island, &c., No. 1968; Hong-Kong to the Brothers, No. 1962; Also China Sea Directory, vol. III, 1904, page 147.

BAY OF BENGAL—CHITTAGONG COAST.

Kurnafuli river—Depth of water in the channels.

No. 104 (first publication).—The Port Officer, Chittagong, has given notice that the following depth of water was found in the channels by soundings taken on the 24th March and reduced to zero:—

		Ft.	in.
Track No. 1—Outer bar—			
Disc on diamond	... ...	13	0
Track No. 2—Inner bar—			
Disc on diamond	... ...	11	6
Ditto	Batten beacon on pillar	12	0
Track No. 3—			
Triangle on cross and ball	... ...	16	0
Track No. 4—Guptakhally crossing—			
Tripod on diamond	... ...	16	0

AUSTRALIA—Queensland—Port Douglas.

New entrance channel—Directions to enter the inlet.

No. 93 (second publication).—The Port Master, Brisbane, has given notice (No. 1 of 1905) that, on and after 1st March, the small light showing a white sector, and the leading beacons carrying green lights at night, for crossing the Bar, will be discontinued, and a pair of white triangular beacons, with vertical black stripe in centre, carrying white lights at night, will be exhibited from Magazine Islet, bearing in line N. E. by N. ½ N.

These lights and beacons in line lead through the centre of the recently dredged channel, 200 feet wide, across the Bar, with a depth of 10 feet at L. W. S. The depth in the Inlet up to the wharves remains as before, *i.e.*, 5 to 6 feet at L. W. S. Dredging operations to form a basin will continue in progress.

Directions.—To enter the Inlet, bring the pair of triangular beacons or white lights at night in line bearing N. E. by N. ½ N. when approaching Island Point. Keep these marks in line until the existing pair of beacons, carrying red lights at night, bearing N. ½ E., come in line, when proceed on the latter line as heretofore.

Australia Directory, vol. 2; Admiralty Chart No. 2924 (old).

AUSTRALIA—Wide Bay Bar.

Hook point—The square beacons to be kept open.

No. 94 (second publication).—With reference to Notice to Mariners No. 321, dated 24th September 1904, issued by this office, the Port Master, Brisbane, has given further notice (No. 2 of 1905) that, when crossing Wide Bay Bar, the square beacons on Hook Point must now be kept open once their own width to the Northward.

Charts affected—Nos. 1030 and 1068; Australia Directory, vol. 2.

PACIFIC OCEAN—Fiji islands.

Levuka harbour—Alteration in lights.

No. 95 (second publication).—The British Admiralty has given notice (No. 145 of 1905) that, after 31st December 1904, the colour of the light (*fixed*) situated 1½ cables S. 50° E. from Nasova flagstaff would be changed from green to *red.*

Approximate position, lat. 17° 41½′ S., long. 178° 51½′ E.

Also, that after the same date a *green fixed* light would be established on the south-eastern extremity of Queen's wharf, situated about half a cable N. 28° E. from Naquima point. This is in addition to the green light on the north-east extreme of the same wharf.

(*Variation 10° Easterly in 1905.*)

This Notice affects the following Admiralty Chart:—Ovalau, No. 1849; Levuka harbour, No. 1844: Also, List of Lights, part VI, 1905, No. 1680, page 291; part VII, No. 534, page 105; and Pacific Islands, vol. II, 1900, pages 151, 150.

CHINA, NORTH COAST—Wei Hai Wei, western entrance.

Non-existence of shoal.

No. 96 (second publication).—The British Admiralty has given notice (No. 147 of 1905) that a careful search made by divers, and also by use of the lead, failed to find the 25 feet patch shown on the Chart at a distance of 2½ cables S. 60° E. from Grafton point in the western entrance to Wei Hai Wei; it is considered, therefore, that this solitary sounding was due to an error in the original copy of the survey sent into Office, and should have been 35 instead of 25; it has in consequence been expunged from the Chart. There is, however, a depth of 30 feet, rock, to the north-eastward of the position where 25 feet was shown. From it the north-eastern extreme of Pei Shan point bears N. 32° W., distant 3¾ cables, and the south extreme of King Hall point S. 74° W.

Approximate position, lat. 37° 31½′ N., long. 122° 9½′ E.

(*Variation 3° Westerly in 1905.*)

This Notice affects the following Admiralty Chart:—Wei Hai Wei anchorage, No. 3085: Also, China Sea Directory, vol. III, 1904, page 556.

AFRICA, SOUTH—Cape Colony.

Simon's bay—Dockyard extension works—Light-buoy established.

No. 97 (second publication).—With reference to Notice to Mariners No. 307, dated 18th November 1904, issued by this Office, the British Admiralty has given further notice

(No. 149 of 1905) that a light-buoy exhibiting a *white fixed* light has been established to mark the extremity of the extension works in progress off Block House point; it is situated at a distance of 3¾ cables N. 14° E. from the Block House on Block House point.

Approximate position, lat. 34° 11¼′ S., long. 18° 26¼′ E.

(*Variation 29° Westerly in 1905*)

CAUTION.—Vessels must not pass to the southward of this light-buoy.

This Notice affects the following Admiralty Chart:—Simon's bay, No. 1849: Also, Africa Pilot, part II, 1901, page 343; Africa Pilot, part III, 1897, page 72; and Supplement, 1900, page 6.

PACIFIC OCEAN—NEW HEBRIDES GROUP.

Espiritu Santo island, Baldwin cove—Rock reported.

Aoba island—Rock to the north-westward.

No. 98 (second publication).—The British Admiralty has given notice (No. 151 of 1905) of the existence of a coral knoll, with a depth of 5 feet over it, in Baldwin cove, situated in a position from which the rock (dries 3 feet) on Richards reef bears S. 10° E., distant 1 3/10 cables, and Conspicuous tree in line with an island (30 feet) S. 81° W.

This head, which is 2 or 3 yards in extent, is steep-to, and has depths of 9 to 10 fathoms around it.

Approximate position, lat. 15° 35′ S., long. 167° 1½′ E.

Also, that he had received reliable information of the existence of a pinnacle rock, with a depth of 5 feet over it, situated about 5 miles N. W. from Lorni bluff, Aoba island.

There is a depth of 30 fathoms close to this rock.

Approximate position, lat. 15° 17′ S., long. 167° 44½′ E.

(*Variation 9° Easterly in 1905.*)

This Notice affects the following Admiralty Charts:—Plan of Baldwin cove on Chart No. 1486; New Hebrides island, No. 3033: Also, Pacific Islands, vol. II, 1900, pages 486, 449.

CHINA, EAST COAST—SHANTUNG.

Kyau Chau bay—Great harbour entrance—Shoal formed in approach.

No. 99 (second publication).—The British Admiralty has given notice (No. 153 of 1905) that a shoal has been formed by the discharge of spoil on the bank opposite to the entrance of the Great harbour, Kyau Chau bay, the position of this shoal is marked by a spar beacon with a broom as a topmark, erected in a depth of 2 feet at low water, and situated at a distance of 3 3/10 miles N. 12° E. from Yu nui san light.

Approximate position on Chart No. 857, lat. 36° 5′ 53″ N., long. 120° 18′ 5″ E.

(*Variation 3° Westerly in 1905.*)

This Notice affects the following Admiralty Chart:—Kyau Chau bay, No. 857: Also, China Sea Directory, vol. III, 1904, page 530.

KOREA, WEST COAST—NAJU GROUP.

Moji do—Shoal to the north-eastward.

No. 100 (second publication).—The British Admiralty has given notice (No. 156 of 1905) of the existence of a shoal, with a depth of 1½ fathoms over it, situated at a distance of about 8 cables S. 76° E. from the northern extremity of Moji do, Naju group, Korea.

Approximate position, lat. 34° 38½′ N., long. 125° 58½′ E.

This shoal appears to be the outer extremity of a ledge which extends for about three-quarters of a mile in an E.N.E. direction from the north-east point of the island.

(*Variation 4° Westerly in 1905.*)

This Notice affects the following Admiralty Charts:—Korean archipelago, No. 104; western coast of Korea, No. 913: Also, Sailing Directions for, &c., Korea, &c., 1904, page 74.

EASTERN ARCHIPELAGO—Strait of Malacca—Straits Settlements.

Kwala Muar—Light-buoy established at entrance.

No. 101 (second publication).—The British Admiralty has given notice (No. 158 of 1905) that, on 1st January 1905, a light-buoy was established at the entrance of Kwala Muar, in approximately lat. 2° 2′ 0″ N., long. 102° 31′ 40″ E. The character of the light exhibited is not stated, but it is presumed that it is *white fixed.*

This Notice affects the following Admiralty Chart:—Cape Rachado to Singapore, No. 795: Also, China Sea Directory, vol. I, 1896, page 190; and Supplement, 1899, page 14.

CHINA—Hong Kong.

Green island light—Arc of visibility.

No. 102 (second publication).—The British Admiralty has given notice (No. 162 of 1905) that during the construction of a new lighthouse tower, Green island light will not show red and white sectors as before, but will be only visible as a *white fixed* light from the bearing of S. 76° E., through east and north, to N. 84° W., being obscured in other directions by the new building.

Approximate position, lat. 22° 17½′ N., long. 114° 5½′ E.

(*Variation 1° Easterly in 1905.*)

This Notice affects the following Admiralty Chart:—Hong Kong, Nos. 1466 and 3280: Also, List of Lights, part VI, 1905, No. 721; China Sea Directory, vol. III, 1904, page 68.

CHINA—Yellow sea—Pechili and Liau Tung gulf.

Pechili strait—Navigation dangerous.

No. 86 (third publication).—The British Admiralty has given notice (No. 122 of 1905) that the Japanese Government gives warning in the Japanese Official Gazette of 29th January 1905 of the danger to all shipping in navigating between Shantung peninsula and Liau Tung gulf.

Approximate position, lat. 38° 30′ N., long. 121° 0′ E.

AFRICA, EAST COAST—Pungue river entrance.

Additional buoy established.

No. 87 (third publication).—The following Notice to Mariners (No. 123 of 1905) issued by the British Admiralty is republished:—

Information, dated 9th January 1905, has been received from H.B.M. Consul at the port of Beira that a small cylindrical buoy, painted in black and white horizontal bands, and surmounted by a cross, has been moored between Nos. 1 and 3 buoys, Pungue river entrance. This buoy indicates the position of a shoal with 12½ feet over it at low-water springs. Small vessels can pass on either side of this buoy, but large vessels should keep to the southward of it. A note to this effect has been placed on the Chart.

Approximate position, lat. 19° 56′ S., long. 34° 56′ E.

This Notice affects the following Admiralty Chart:—Beira harbour, No. 1003: Also, Africa Pilot, part III, 1897, page 221; and Supplement, page 20.

AFRICA, NORTH-EAST—Red sea—Eastern shore.

Kamaran passage, south channel—Buoy disappeared.

No 88 (third publication).—With reference to Notice to Mariners No. 134, dated 14th April 1904, issued by this office, the British Admiralty has given further notice (No. 127 of 1905) that the black conical buoy, surmounted by a staff and ball, on the northern side of South channel, Kamaran passage, has disappeared.

This buoy formerly marked the extremity of the shoal extending from ras el Yemmen, and was moored at a distance of 1¼ cables N. 22° W. from ras el Bayádh telegraph hut.

Approximate position, lat. 15° 15½′ N., long. 42° 34½′ E.

Note.—The attention of Mariners is directed to the cautionary note, regarding the buoys in this locality, on the Admiralty Chart, and in the Red Sea and Gulf of Aden Pilot, 1900.

(*Variation 3° Westerly in 1905.*)

This Notice affects the following Admiralty Chart:—Kamaran passage, No. 543: Also, Red Sea, &c., Pilot, 1900, page 312.

EASTERN ARCHIPELAGO—JAVA, NORTH COAST—BATAVIA ROADS.

Tanjong Priok harbour—Night signals for Pilot.

No. 89 (third publication).—The British Admiralty has given notice (No. 130 of 1905) that Masters of vessels desiring permission to enter the harbour of Tanjong Priok at night must make the signal for a pilot according to the International Code, viz., a blue light every fifteen minutes, or a bright light shown at intervals above the bulwarks; a rocket fired from the Time ball station in reply indicates that permission is given, and that a pilot is being sent.

Approximate position, Time signal station on Chart No. 933, lat. 6° 6′ S., long. 106° 53′ E.

This Notice affects the following Admiralty Chart:—Batavia roadstead, No. 933: Also, Eastern Archipelago, part II, 1904, page 81.

AFRICA, NORTH-EAST—RED SEA, WESTERN SHORE.

Mersa Sheikh Barud—Shoal in approach.

No. 90 (third publication).—The British Admiralty has given notice (No. 133 of 1905) of the existence of a coral shoal, in the approach to Mersa Sheikh Barud, about 15 feet in diameter, and having a depth of 6 feet over it. From it the tomb on the northern point of the entrance to Mersa Sheikh Barud bears S. 32° W., distant 2 miles.

Approximate position, lat. 19° 38′ N., long. 37° 14½′ E.

(*Variation 3° Westerly in 1905.*)

NOTE.—When the railway is finished from the Nile to Mersa Sheikh Barud it is proposed to alter the name to Bander Sudan.

This Notice affects the following Admiralty Charts:—Red sea, No. 8e; approaches to Sawakin, No. 81: Also, Red Sea, &c., Pilot, 1900, page 145.

BAY OF BENGAL—BURMA COAST.

Rangoon river—Intended marking of Alun sand by a buoy.

No. 91 (third publication).—The Bombay Government has given notice (No. 14 of 1905) that on or about the 27th instant a first class Conical Buoy, painted red, will be moored in, 12 feet at low water on the southern edge of the Alun Sand to mark the limit of the navigable channel for seagoing steamers. Its approximate position will be N. 56° E., distant 1,700 feet from the mouth of Kanoun to Chaung.

This Notice affects the following Admiralty Chart:—Rangoon River and Approaches No. 833: Also Bay of Bengal Pilot, Third Edition, 1901, page 353.

BAY OF BENGAL—ANDAMAN ISLANDS.

Port Blair—Leading lights established.

No. 92 (third publication).—The Chief Commissioner, Andaman and Nicobar islands has given notice (No. 15 of 1905) that the undermentioned leading lights have been established with effect from the 8th instant in the following positions in Port Blair Harbour:—

(*a*) *Atalanta Point leading lights.*—Consist of one lower and one upper light, each exhibiting a fixed white light of about 70-candle power. The lower light is 230 yards N. 83½° W. from the centre of the cellular jail (as shown on Admiralty chart No. 2505) and is 70 feet above high water. The upper light is 903 feet S. 35° W. from the lower light, and is 144 feet above high water. These two lights when brought in line one above the other, lead from seaward S. 35° W. into the harbour.

(*b*) *South Point leading lights.*—Consist of one lower and one upper light, each exhibiting a fixed white light of about 35-candle power. The lower light is on the end of South Point jetty, and is 7 feet above high water, the upper light is 595 feet S. 11½° E. from it and 40 feet above high water; these lights in line one above the other lead from the Atalanta Point leading light line, S. 11½° E. to the anchorage off Ross Island.

NOTE.—All the above lights are exhibited from light towers 7 feet high painted white which are easily distinguished in daylight.

All bearings are true.

E. J. BEAUMONT, COMDR., R.I.M.,
Port Officer of Calcutta.

REGISTERED No. C209.

No. 14 of 1905.

SUPPLEMENT TO

The Calcutta Gazette.

WEDNESDAY, APRIL 5, 1905.

OFFICIAL PAPERS.

[Non-Subscribers to the GAZETTE *may receive the* SUPPLEMENT *separately on payment of five rupees per annum if delivered in Calcutta, or seven rupees and eight annas if sent by post.]*

CONTENTS.

	Page.		Page.
WEATHER and Crop Report for the week ending the 3rd April 1905	497	RESULTS of the Meteorological Observations taken at the Alipore Observatory from 26th March to 1st April 1905 ...	503
Circular and Eastern Canals for the week ending Saturday the 1st April 1905	503	Bengal and North-Western Railway for the month of December 1904	504
		Weekly Return of Traffic Receipts on Indian Railways ...	506

WEATHER AND CROP REPORT.

For the week ending the 3rd April 1905.

Burdwan.—Rainfall at Sadar 0·18, Kalna 0·46, Katwa nil, Raniganj 0·18. Ploughing continues. Pressing of canes nearly over. Fodder and water sufficient. Cattle-disease reported from Kalna. Common rice sells as follows:—

		Srs.	ch.	
Sadar	(Old)	12	8	per rupee.
	(New)	14	4	
Kalna		12	8	
Katwa		14	10	
Raniganj		15	0	

Birbhum.—Rainfall nil. Weather seasonable. Sugarcane-pressing continues. Fodder and water sufficient. Common rice sells as follows:—

	Srs.	ch.	
Sadar	15	8	per rupee.
Rampur Hát	16	0	

Bankura.—Rainfall at Sadar nil, Vishnupur 0·52. Weather seasonable. Ploughing in progress. Sugarcane pressing about over. No cattle-disease. Fodder and water sufficient. Common rice sells as follows:—

	Srs.	ch.	
Sadar	16	0	per rupee.
Vishnupur	16	4	

Midnapore.—Rainfall at Sadar 0·54, Contai 0·68, Tamluk 0·63, Ghatal 1·31. Land is being prepared for *aus*. Sugarcane being planted. Fodder and water sufficient. Common rice sells as follows:—

	Srs.	ch.	
Sadar	15	0	per rupee.
Contai	16	0	
Tamluk	14	0	
Ghatal	14	0	

Hooghly.—Rainfall at Sadar nil, Serampore 0·02, Arambagh 0·12. Weather—day hot, night cool. No cattle-disease. Condition of *rabi* crops not good. Fodder and water sufficient. Common rice sells as follows :—

	Srs.	ch.	
Sadar	10	0	per rupee.
Serampore	11	3	
Arambagh	13	8	

Howrah.—Rainfall at Sadar 0·27. Weather varying, snaps of cold at times. Cultivation of sugarcane going on. Soil being prepared for sowing of paddy. Fodder for cattle and water sufficient. Common rice sells as follows :—

	Srs.	ch.	
Sadar	12	0	per rupee.
Ulubaria	13	0	

24-Parganas.—Rainfall at Sadar 0·27, Barasat 0·48, Barrackpore 0·05, Basirhat nil, Diamond Harbour 0·04. Weather seasonable. State and prospects of crops fair. Lands are still being prepared for *aus* and jute. Common rice sells at 12 seers per rupee. Condition of cattle good. Supply of fodder and water sufficient.

Nadia.—Rainfall at Sadar 0·12, Kushtia 0·06, Meherpur 0·19, Chuadanga 0·45, Ranaghat 1·14. Weather variable. Prospects of standing crops good except in Meherpur. Fodder and water sufficient. No cattle-disease reported. Common rice sells as follows :—

	Srs.	ch.	
Sadar	13	0	per rupee.
Kushtia	14	8	
Meherpur	11	0	
Chuadanga	13	0	
Ranaghat	13	0	

Murshidabad.—No rain. Weather seasonable. *Rabi* crops are being harvested. *Aus* and jute are being sown in places. Pressing of sugarcane continues in Kandi. Fodder and water sufficient. No cattle-disease. Common rice sells as follows :—

	Srs.	ch.	
Sadar	13	0	per rupee.
Kandi	15	0	
Jangipur	15	0	
Lalbagh	13	0	

Jessore.—Rainfall at Sadar 0·60, Jhenida 0·24, Magura 0·21, Narail 0 63, Bongaon 0·30. Weather seasonable. Prospect of crops good. Fodder and water sufficient. Common rice sells as follows :—

	Srs.	ch.	
Sadar	15	0	per rupee.
Jhenida	13	8	
Magura	13	0	
Narail	13	12	
Bangaon	13	5	

Khulna.—Rainfall at Sadar 0·64, Bagerhat 1·16, Satkhira nil. Weather still windy. Outturn of winter rice, rape and mustard estimated at 50, 75 and 92 per cent., respectively. Jute sowing estimated at 5 per cent. State of summer rice favourable. No cattle-disease. Fodder and water sufficient. Common rice sells as follows :—

	Srs.	ch.	
Sadar	16	0	per rupee.
Bagerhat	16	0	
Satkhira	13	0	

Rajshahi.—Rainfall at Sadar nil, Nator nil, Naogaon ·06. Harvesting of *rabi* continues. Sowing of jute and paddy continues. Weather cool. Fodder and water sufficient. Common rice sells as follows :—

	Srs.	ch.	
Sadar	15	0	per rupee.
Nator	12	12	
Naogaon	16	0	

Dinajpur.—Rainfall nil. Weather seasonable. Standing crops fair. Lands are being prepared for jute and *bhadoi*. Fodder and drinking-water sufficient. No cattle-disease. Common rice sells as follows :—

	Srs.	ch.	
Sadar	15	8	per rupee.
Balurghat	14	0	
Thakurgaon	13	0	

Jalpaiguri.—Rainfall nil. Weather seasonable. Harvesting of tobacco continues Fields for *bhadoi* paddy and jute are being prepared. Common rice sells at 13¾ seers a rupee Fodder and water sufficient. No cattle-disease.

Darjeeling.—Rainfall nil. Weather seasonable. Barley, wheat and potatoes doing well. Maize being sown. *Terai*—Ploughing for *bhadoi* and jute going on. Coarse rice sells as follows :—

	Srs.	ch.	
Hills	10	0	per rupee.
Terai	14	0	

Maize sells at Darjeeling at 13 and at Kalimpong at 14 seers per rupee.

Rangpur.—Rainfall at Gaibanda ·25, elsewhere nil. Weather seasonable. Standing crops doing well. Common rice sells as follows :—

	Srs.	ch.	
Sadar	13	0	per rupee.
Gaibanda	15	0	
Kurigram	15	0	
Nilphamari	14	8	

Bogra.—No rain. Weather cool at night. Harvesting of *rabi* crops approaching completion and cultivation of lands for *aus* and jute still going on. Fodder and water sufficient. No cattle-disease. Common rice sells at 14¼ seers a rupee.

Pabna.—Rainfall at Sadar 0·15, Sirajganj nil. Weather partially cloudy and cool at night. Prospects of standing crops fair. Sowing of paddy and jute and harvesting of *rabi* crops still continue. No cattle-disease. Fodder and water sufficient. Common rice sells at 12 seers 12¼ chittacks a rupee.

Dacca.—Rainfall at Sadar ·12. Fall general. Prospects of crops good. Weather seasonable. Fodder available. No cattle-disease. Common rice sells as follows :—

	Srs.	ch.	
Sadar	15	0	per rupee.
Manikganj	13	0	
Munshiganj	14	0	
Narayanganj	14	0	

Mymensingh.—Rainfall at Sadar 0·17, Kishorganj 0·29. Weather seasonable. Sowings of jute and *aman* and winter rice continues. Sugarcane-planting estimated at 75 per cent. Summer rice suffered from hails in Kishorganj subdivision. Fodder and water ample. No cattle-disease. Common rice sells as follows :—

	Srs.	ch.	
Sadar	14	0	per rupee.
Jamalpur	16	0	
Kishorganj	14	12	
Netrokona	17	0	
Tangail	Not reported.		

Faridpur.—Rainfall at Sadar 0·06, Goalundo 0·62, Madaripur 0·76. Weather seasonable. Harvesting of *rabi* crops nearly completed. Jute and paddy being sown. Condition of jute favourable. Fodder and water sufficient. No cattle-disease. Common rice sells at 12¼ seers a rupee.

Backergunge.—Rainfall at Sadar 1·14. Weather partially cloudy. Excessive rainfall has stopped sowing of autumn rice, *til* and jute in low lands. No cattle-disease. Fodder sufficient. Common rice sells at 13¼ seers per rupee.

Tippera.—Rainfall at Sadar 0·10, Brahmanbaria nil, Chandpur 1·45. Weather seasonable. Prospects good. Harvesting *rabi* in Sadar and sowing of paddy and jute in subdivisions going on. Fodder and water available. Cattle-disease reported from Chauddagram. Common rice sells as follows :—

	Srs.	ch.	
Sadar	13	13	per rupee.
Brahmanbaria	16	0	
Chandpur	13	8	

Noakhali.—Rainfall at Sadar 0·8, Feni 2·47. Weather cold and foggy. Prospect of crops fair on the whole. Outturn of winter rice less than average. No cattle-disease. Fodder and water sufficient. Common rice sells as follows :—

	Srs.	ch.	
Sadar	14	0	per rupee.
Feni	16	0	

Chittagong.—Rainfall at Sadar 2·10, Cox's Bazar 0·13. Weather seasonable. Lands being ploughed for *aus* crops. Cattle-disease reported. Fodder and water sufficient. Common rice sells as follows :—

	Srs.	ch.	
Sadar	13	4	per rupee.
Cox's Bazar	16	2	

Chittagong Hill Tracts.—Rainfall 2·55. Weather cloudy and rainy at beginning, and atmosphere vapoury towards end. Prospects of crops bad. *Joom* cutting and burning retarded by rain. Cattle-disease still prevailing. Common rice sells at 13 seers per rupee at Sadar.

Patna.—Rainfall at Sadar 0·08, Behar 0·05. Weather seasonable. Harvesting of *rabi* and collection of opium going on. No cattle-disease. Fodder and water sufficient. Common rice sells as follows :—

	Srs. ch.	
Sadar	14 0	per rupee
Barh	14 0	
Bihar	14 0	
Dinapore	14 8	

Gaya.—Rainfall at Sadar 0·05, Aurangabad 0·06. Weather hot in the day and cool at night. Harvesting of *rabi* crops and planting of sugarcane reaching completion. Fodder and water sufficient. Common rice sells at 13½ seers per rupee.

Shahabad.—Rainfall nil. Harvesting of *rabi* and planting of sugarcane in progress. Weighment of poppy leaves commenced. Fodder and water abundant. Common rice sells at 14 seers per rupee at Sadar.

Saran.—Rainfall at Sadar 0·01, Sewan 0·87, Gopalgunge 0·02. Weather seasonable. Harvesting of *rabi* going on. Lancing of poppy almost completed. No cattle-disease. Fodder and water sufficient. Common rice and maize sell at 14 and 20 seers per rupee respectively at Sadar.

Champaran.—Rainfall at Sadar 0·08, Bettiah 0·04. Weather seasonable. Harvesting of *rabi* and collection of opium in progress. Prospects fair. Sugarcane pressing nearly finished. Lands being prepared for *bhadoi* crops. Fodder and water sufficient. No cattle-disease. Common rice and maize sell at 15 and 21 seers per rupee respectively at Sadar.

Muzaffarpur.—Rainfall at Sitamarhi 0·01. Weather seasonable but cool. Prospects of crops good. Fodder and water sufficient. No cattle-disease. Common rice and maize sell at 13 and 19 seers per rupee respectively at Sadar.

Darbhanga.—Rainfall at Sadar 0·01. Weather seasonable. Harvesting of *rabi* in progress. Sowing of paddy in low lands in progress. Fodder and water sufficient. No cattle disease. Common rice sells as follows :—

	Srs. ch.	
Sadar	16 8	per rupee.
Samastipur	16 0	
Madhubani	15 9	

Monghyr.—Rainfall nil. Weather seasonable. Harvesting of *rabi* and pressing of sugarcane continues. Lands being prepared for *bhadoi* crops. Fodder and water sufficient. Common rice sells as follows :—

	Srs ch.	
Sadar	13 0	per rupee.
Begusarai	14 0	
Jamui	13 0	

Bhagalpur.—Rainfall nil. Weather hot in the day but cool at night. Harvesting of *rabi* crops proceeding. Cattle-disease reported from Banka. Fodder and water sufficient. Common rice sells as follows :—

	Srs. ch.	
Sadar	15 4	per rupee.
Banka	13 12	
Madhipura	17 0	
Supaul	19 0	

Purnea.—Rainfall at Sadar 0·04. Weather seasonable. *Rabi* being harvested. Prospects fair. Lands being prepared for *bhadoi* and jute crops. Fodder and water sufficient. Common rice sells as follows :—

	Srs. ch.	
Sadar	13 0	per rupee.
Kishanganj	13 0	
Araria	15 0	

Malda.—Rainfall nil. Mornings and evenings are cool and days are bright with strong westerly wind. Preparation of lands for *bhadoi* crops still going on. Gathering of wheat and barley commenced at places. No cattle-disease. Fodder and water sufficient. Common rice sells at 13½ seers per rupee at Sadar.

Santhal Parganas.—Rainfall at Godda 0·15, Jamtara 0·23. Weather seasonable. Prospects of wheat, barley and *mohua* fair. Sugarcane doing well. Fodder and water sufficient. Common rice sells at 13 seers per rupee at Sadar.

Cuttack.—Rainfall at Sadar 0·97. Fall general Weather seasonable. Harvesting of *saradh* in progress. *Dalua* maturing. Sugarcane being cut. Tobacco growing. Fodder and water sufficient. Common rice sells at $17\frac{1}{16}$ seers per rupee at Sadar.

Balasore.—Rainfall at Sadar 0·78. Threshing of *saradh*, pressing of sugarcane and harvesting of *rabi* crops continue. Ploughing continues. Fodder and water available. Common rice sells as follows:—

	Srs.	ch.	
Sadar	17	0	per rupee.
Bhadrak	20	0	

Angul.—Rainfall at Sadar 0·25, Phulbani 0·69. Nights are cold like winter. Sugarcane being planted. Fodder and water available. Common rice sells as follows:—

	Srs.	ch.	
Sadar	20	0	per rupee.
Khondmals	18	0	

Puri.—Rainfall at Sadar 0·10. Weather seasonable. Threshing of *saradh* paddy and pressing of sugarcane continue. *Mung* and castor ripening. Cotton and linseed progressing. Tobacco being reaped. *Dalua* flowering. Condition of other miscellaneous crops good. Lands being ploughed for ensuing paddy and sugarcane crops. Fodder and water sufficient. Common rice sells at $15\frac{3}{4}$ seers per rupee at Sadar.

Hazaribagh.—Rainfall at Sadar 0·54, Giridih 0·10. Lands being ploughed. Sugarcane being planted. Cattle-disease reported from three thanas. Fodder and water sufficient. Common rice sells as follows:—

	Srs.	ch.	
Sadar	12	8	per rupee.
Giridih	13	0	

Ranchi.—Rainfall at Sadar 0·02. Weather seasonable. Ploughing and manuring in progress. Standing crops doing well. Cattle-disease reported from ten thanas. Fodder and water sufficient. Common rice sells as follows:—

	Srs.	ch.	
Sadar	13	0	per rupee.
Gumla	18	8	

Palamau.—Rainfall at Sadar 0·16. Weather cloudy. Harvesting of *rabi* crops still going on. Cattle-disease reported. Fodder and water sufficient. Common rice sells at 13 seers per rupee at Sadar.

Manbhum.—Rainfall at Sadar 0·22, Gobindpur 0·23. Weather seasonable. Prospects of crops good. Outturn of *arhar* and *mohua* estimated at 75 per cent. Fodder and water sufficient. Cattle-disease reported from three thanas. Common rice sells as follows:—

	Srs.	ch.	
Sadar	13	0	per rupee.
Gobindpur	12	0	

Singhbhum.—Rainfall at Sadar 0·03. Lands being prepared for cultivation. Harvesting of *rabi* crops nearly finished. Fodder and water sufficient. Cattle-disease continues in thana Chakradharpur. Common rice sells at 14 seers per rupee at Sadar.

General Summary.—Rainfall during the week was light and scattered, except in parts of Eastern Bengal where it was moderately heavy. It is reported that summer rice suffered from hail in the Kishorganj subdivision of the Mymensingh district and that excessive rain has stopped the sowing of autumn rice and jute in low lands of Backergunge. Harvesting of *rabi* continues. Outturn expected to be 75 per cent. of a normal crop. Preparation of land for autumn crops in progress. Prospects fair. Cattle-disease reported from eight districts, but there is no want of fodder or water. The price of common rice has risen in seven districts and fallen in five.

By order of the Lieutenant-Governor of Bengal,

R. W. CARLYLE,
Offg. Chief Secretary to the Govt. of Bengal.

REVENUE DEPARTMENT,
The 4th April 1905.

GOVERNMENT OF BENGAL, IRRIGATION DEPARTMENT.

Approximate Return of Traffic on the Circular and Eastern Canals for the week ending Saturday, the 1st April 1905, as compared with the corresponding week of the previous year.

Nature of Cargo.	Week ending Saturday, the 1st April 1905.			Week ending Saturday, the 2nd April 1904.		
	Number of boats.	Weight of cargo.	Tolls.	Number of boats.	Weight of cargo.	Tolls.
		Mds.	Rs.		Mds.	Rs.
Rice and paddy ...	851	2,38,650	4,380	739	1,51,425	2,500
Jute ...	10	2,750*	49	25	13,675†	136
Firewood ...	28	19,925	286	68	47,875	734
Other articles ...	773	2,52,991	3,092	823	1,21,390	2,547
Total ...	1,662	5,14,316	7,807	1,655	4,34,365	5 916

* Weight by canal measurement, 3,726 maunds.
† Ditto ditto, 19,457½ ,,

Results of the Meteorological Observations taken at the Alipore Observatory from 26th March to 1st April 1905.

Month.	Date.	Maximum in sun	Number of hours of bright sunshine.	Mean pressure in vacuo reduced to 32° Fahr	Temperature				Hygrometry				Wind.		Rain.	Weather.
					Mean	Maximum	Range.	Minimum	Mean wet bulb.	Vapour tension.	Dew point.	Humidity.	Prevailing direction.	Miles recorded.		
1905.				Inches.						Inch.		%			Inches.	
Mar.	26th	145·3	8·7	29·853	78·1	88·7	21·7	67·0	73·4	0·772	71·4	80	E, SSW and S ...	133	Nil	Partially cloudy, ☁.
,,	27th	148·8	2·4	·821	79·1	88·2	19·3	68·9	74·8	·810	72·9	82	SSW, WSW and variable.	177	0·37	Chiefly cloudy, o, t, p, ≤, ⸗, K.
,,	28th	143·6	8·5	·774	81·8	92·9	20·5	72·4	73·8	·753	70·7	71	SSW and WSW	131	Nil	Partially cloudy, ☁.
,,	29th	147·1	8·7	·762	83·0	92·9	18·0	74·9	77·5	·911	76·4	83	SSW and S ...	155	,,	Partially cloudy.
,,	30th	146·1	6·7	·749	84·2	94·7	19·3	75·4	76·8	·876	75·2	78	SW, SSW and variable.	181	,,	Partially cloudy, o, g, p, t, K, ⸗, ▲.
,,	31st	142·6	8·3	·726	80·7	90·0	16·8	73·2	66·4	·480	57·8	47	SSW, NW and calm.	123	0·27	Clear.
April	1st	144·1	7·4	·817	76·3	86·4	18·8	67·6	59·5	·303	45·2	36	W by S, WNW and calm.	101	Nil	Clear.

The mean pressure of the seven days	Inches.	29·786
The average pressure of the corresponding period for 24 years, Surveyor-General's Office		29·779
	Hours.	
The total number of hours of bright sunshine		50·7
The maximum possible number of hours of sunshine		85·8
	°	
The mean temperature of the seven days		80·5
The average temperature of the corresponding period for 24 years, Surveyor-General's Office		83·6
The extreme variation of temperature		27·7
The maximum temperature		94·7
	Miles.	
The highest velocity of the wind in one hour		16
	%	
The mean relative humidity		68
The average relative humidity of the corresponding period for 24 years, Surveyor-General's Office		66
	Inches.	
The total fall of rain from 26th March to 1st April 1905		0·64
The average fall of the corresponding period for 24 years, Surveyor-General's Office		0·11
The total fall from 1st January to 1st April 1905		6·04
The average fall of the corresponding period for 24 years, Surveyor-General's Office		2·80

The mean pressure, temperature, etc., are deduced from the traces of the Barograph and Thermograph and from eye observations.

The maximum and minimum temperatures are obtained from self-registering thermometers. All the thermometers are verified and the readings have been corrected to a standard constructed and verified at the Kew Observatory. They are exposed under a thatched shed open at the sides, and are suspended four feet above the ground.

The barometer readings are corrected to those of the standard, Newman's No. 86, formerly at the Surveyor-General's Office.

The hygrometric elements are obtained from Tables III, IV and V of the official tables computed in the Meteorological Office, and based on Regnault's modifications of August's formula.

The directions and the movement of the wind are taken from the trace of a Beckley's anemograph.

The mouth of the rain-gauge is one foot above the ground. Rainfall reported on any day is for 24 hours preceding 8 A.M. of that day.

☁, dew; o, overcast; t, thunder; p, passing temporary showers; ≤, lightning; ⸗, strong wind; K, thunderstorm; g, gloomy; ▲, hail.

METEOROLOGICAL OFFICE, GOVT. OF INDIA,
Alipore (Calcutta), the 3rd April 1905.

G. W. KÜCHLER,
for Meteorological Reporter to the Govt. of India and Director-General of Indian Observatories.

BENGAL AND NORTH-WESTERN RAILWAY.

Statement of goods traffic for the month of December 1904, compared with the corresponding period in 1903.

Description of Goods.	1903.		1904.		Increase.		Decrease.		Explanation of fluctuations by the Traffic Manager.
	Tons.	Rs.	Tons.	Rs.	Tons.	Rs.	Tons.	Rs.	
I.—Apparel, including drapery, haberdashery, millinery, uniforms, accoutrements, boots and shoes.	68	1,058	127	1,843	59	785	.....	.....	
II.—Coal and coke carried for the Public and Foreign Railways.	6,138	13,443	7,610	14,693	1,472	1,250	.....	.....	
III.—Cotton—									
1. Raw	221	1,995	256	3,037	35	1,042	.....	...	
2. Manufactured—									
(a) } Twist and yarn. { European	112	1,183	53	710	.....	.....	59	473	
(b) } { Indian ...	378	4,611	548	5,339	170	728	.....	.....	
(c) } Piece-goods { European	1,903	18,861	1,706	17,223	.....	.....	197	1,639	Large increase in previous month.
(d) } { Indian ...	524	4,457	605	5,333	81	876	.....	.....	
(e) Others	15	195	43	557	28	362	.....	.....	
IV.—Chemicals, excepting saltpetre	95	303	140	233	45	.....	...	70	
V.—Drugs—									
1. Intoxicating, other than opium.	100	288	2	56	111	344	.....	.....	
2. Non-intoxicating—									
(a) Medicinal preparations.	.....	.....	.....	.....	.....	.....	.....	.....	
(b) Others	610	3,414	479	3,066	.....	.....	133	348	
VI.—Dyes and Tans—									
1. Al (Morinda citrifolia)	.....	.....	.....	.....	.....	.....	.....	.....	
2. Alizarine and aniline dyes.	7	87	2	37	.....	.....	5	50	
3. Cutch	49	161	21	148	.....	.....	28	13	
4. Indigo	978	8,740	719	7,275	.....	.....	259	1,465	
5. Myrabolams	15	26	13	109	.....	23	3	.....	
6. Tanning barks	23	273	.....	.....	.....	.....	23	273	
7. Turmeric	112	1,356	181	1,617	69	261	.....	.....	
8. Others	78	404	61	570	.....	166	17	.....	
VII.—Fodder—									
1. Oilcake	716	3,080	606	2,959	.....	.....	110	121	
2. Hay, straw, and grass ...	392	5,141	308	715	.....	.....	84	4,426	
VIII.—Fruits and vegetables, fresh	109	131	45	294	.....	113	64	.....	
IX.—Grain and Pulse—									
1. Gram and pulse ...	9,998	42,190	8,298	34,899	.....	.....	1,694	7,291	
2. Jawar and bajra ...	12	50	36	162	24	112	.....	.....	
3. } Rice { in the husk ...	3,913	16,447	2,479	8,689	.....	.....	1,434	1,798	No demand and stock withheld.
4. } { not in the husk	20,293	93,683	17,908	82,173	.....	.....	2,385	11,415	
5. Wheat	11,627	76,032	6,910	43,328	.....	.....	4,717	32,154	
6. Wheat-flour	223	1,169	342	1,639	93	121	.....	.....	
7. Makai	7,129	23,727	18,931	111,478	11,802	87,751	.....	.....	Good crops and demand.
8. Others	4,250	13,075	5,829	27,460	1,579	14,385	.....	.....	
X.—Hides and Skins—									
1. Hides of cattle—									
(a) Dressed or tanned	.....	.....	1	3	1	3	.....	.....	
(b) Raw	955	6,648	881	6,419	.....	.....	74	229	
2. Skins of sheep and other animals—									
(a) Dressed or tanned	6	85	2	6	.....	.....	4	79	
(b) Raw	283	1,747	370	2,546	87	799	.....	.....	
XI.—Horns	9	73	16	227	7	154	.....	.....	
XII.—Hemp (Indian) and other fibres, excluding jute.	5	29	2	42	.....	.....	3	71	
XIII.—Jute—									
1. Raw	177	1,189	788	5,070	611	3,920	.....	.....	
2. Gunny-bags and cloth	1,692	11,590	2,243	12,907	571	1,317	.....	.....	Owing to larger export of bagged goods.
XIV.—Lac	294	1,978	352	2,266	58	288	.....	.....	
XV.—Leather—									
1. Unwrought	12	42	13	51	1	2	.....	.....	
2. Wrought, excepting boots and shoes.	3	20	20	506	17	476	.....	.....	
XVI.—Liquors—									
1. Ale and Beer	8	35	3	28	.....	.....	5	27	
2. Spirits of all kinds, including country spirits.	.....	.....	.....	.....	.....	.....	.....	.....	
3. Wine	23	210	26	251	3	41	.....	.....	
4. All other sorts, including toddy and fermented liquor, other than ale and beer.	.....	.....	.....	.....	.....	.....	.....	.....	
XVII.—Metals—									
1. Brass, unwrought ...	4	30	15	124	11	94	.....	...	
2. ,, wrought ...	187	1,713	197	1,584	10	.....	.....	329	
3. Copper, unwrought ...	.....	.....	.....	.....	.....	.....	.....	.....	
4. ,, wrought ...	12	101	3	89	.....	.....	4	12	
5. Iron and steel—									
(a) Cast	125	1,024	337	1,693	279	675	.....	.....	
(b) Unwrought ...	5	21	34	200	29	209	.....	.....	
(c) Wrought	1,155	6,655	942	5,614	.....	.....	213	1,041	
(d) Manufactures ...	580	3,381	614	4,129	34	348	.....	.....	
6. Others	259	2,089	223	2,033	.....	.....	36	56	
XVIII.—Oils—									
1. Kerosene	1,681	6,560	1,942	7,511	261	1,011	.....	.....	
2. Castor	27	151	37	275	10	24	.....	.....	
3. Cocoanut	15	81	10	67	.....	14	5	.....	
4. Mustard and rape ...	61	545	28	72	.....	.....	33	313	
5. Others	41	350	30	200	.....	...	11	150	

Description of Goods.	1903.		1904.		Increase.		Decrease.		Explanation of fluctuations by the Traffic Manager.
	Tons.	Rs.	Tons.	Rs.	Tons.	Rs.	Tons.	Rs.	
XIX.—Oilseeds—									
1. Castor	357	902	320	674	.....	.....	37	228	
2. Earthnuts	3	10	...	...	...	.....	3	10	
3. Linseed	7,294	34,475	11,020	53,419	3,725	17,944	...	...	Demand in Calcutta.
4. Poppy	557	2,763	369	1,608	.....	.....	188	1,155	
5. Rape and mustard	2,700	11,180	2,892	12,083	... ..	933	808	.....	
6. Til or jinjili	41	168	64	234	23	66	... .	.....	
7. Others	1,102	3,974	1,358	6,256	256	2,282	... ..	.....	
XX.—Opium	1,377	13,106	1,373	16,232	..	... .	104	1,874	
XXI.—Paper and Pasteboard	119	330	135	493	16	163	.....	.....	
XXII.—Provisions—									
1. Dried fruits and nuts	181	2,496	156	1,815	.....	.....	25	681	
2. Ghee	808	2,423	299	2,631	.....	208	69	.....	
3. Others	2,805	9,305	3,782	11,649	977	3,403	.....	.....	
XXIII.—Railway Plant and Rolling Stock carried for the Public and Foreign Railways—									
1. Locomotive engines and tenders and parts thereof.	.....	.....	.....	.....	.....	.....	.....	.....	
2. Carriages and trucks and parts thereof.	.....	.....	.....	.....	.....	.	.....	.....	
3. Materials—									
(a) Steel rails and fish-plates.	.....	.....	.....	.....	.....	.....	.....	.....	
(b) Sleepers and keys of steel and cast-iron.	.....	.....	.....	.....	.....	.....	.....	.....	
(c) Others	... ..	... ..	.....	.....	.....	.....	.....	.....	
XXIV.—Salt	10,237	43,370	11,366	46,754	1,129	5,384	.....	.....	Demand.
XXV.—Saltpetre and other saline substances—									
1. Saltpetre	1,102	4,453	1,150	4,636	47	183	.....	.....	
2. Other saline substances	959	4,327	744	3,311	... ..	.....	215	936	
XXVI.—Silk—									
1. Raw—									
(a) Foreign	 2	 9	 2	 31	.....	 23	.....	.....	
(b) Indian					.....		.....	.....	
2. Piece-goods—									
(a) Foreign	 1	 18	.....	.....	.....	.....	 1	 18	
(b) Indian			.....	.....	.....	... ..			
XXVII.—Spices—									
1. Betelnuts	332	2,779	170	1,351	 1	.....	152	1,428	
2. Cardamoms	5	85	6	65		.....	.....	20	
3. Chillies	108	741	230	847	64	96	.....	.....	
4. Ginger	210	1,833	187	1,787	.....	 13	23	66	
5. Pepper	34	356	47	444		102	.....	.....	
6. Others	190	1,227	123	1,329	.....	103	37	.....	
XXVIII.—Stone and lime	1,423	4,287	2,004	6,187	811	1,900	.....	.....	
XXIX.—Sugar—									
1. Refined or crystallised, including sugarcandy.	398	2,249	361	1,863	.....	.....	18	386	
2. Unrefined—									
(a) Sugar	1,083	5,843	1,797	9,000	704	3,737	.....	.....	
(b) Gur, rab, jaggery, molasses and other saccharine produce.	4,838	24,040	5,828	30,944	.....	.....	1,007	5,115	
XXX.—Tea—									
1. Foreign	 10	 106	 4	 70	.....	.....	 6	 36	
2. Indian					.....	.....			
XXXI.—Tobacco—									
1. Unmanufactured	1,338	9,045	1,785	12,249	450	3,304	.....	.....	
2. Manufactured—									
(a) Cigars	21	195	4	78	.....	.....	17	117	
(b) Other sorts	3	43	24	219	21	177	.....	.....	
XXXII.—Wood—									
1. Timber, unwrought	1,031	2,913	1,208	3,718	177	805	.....	.....	Large export from Naipalgan) Road and Katarnaghat Branch.
2. Logs	1,178	2,674	1,691	4,209	449	1,535	.....	.....	
3. Poles	174	596	194	813	15	19	.....	.....	
4. Manufactures	457	2,646	598	4,549	141	1,904	.....	.....	
XXXIII.—Wool—									
1. Raw	21	237	13	107	.....	.....	9	130	
2. Manufactured—									
(a) Carpets and rugs	.....	.....	8	68	8	68	.....	.....	
(b) (c) Piece-goods { European / Indian	6 / 13	63 / 173	33 / 59	324 / 461	19 / 36	241 / 286	.....	.....	
(d) Other sorts of manufactures.	2	59	.....	.....	.....	.....	2	53	
XXXIV.—All other articles of merchandise—									
1. Indigenous	268	2,672	117	1,279	.....	.....	151	1,393	
2. Imported	8,100	3,.94	8,963	7,216	863	1,922	.....	... ..	
3. Others not specified above.	8,946	31,073	8,730	14,463	.....	.....	207	2,209	
Total	127,229	6,98,149	139,544	6,88,735	26,832	1,03,833	14,507	78,369	

T. Siddle,
For *Acting Chief Auditor*.

Gorakhpur, *the 28th March 1905.*

Weekly Return of Traffic Receipts on Indian Railways.

BENGAL CENTRAL RAILWAY COMPANY, LIMITED.

Approximate Return of Traffic and Mileage for the week ended 18th March 1905 on 139 miles open.

	Coaching Traffic.		Merchandise and Mineral Traffic.		Other earnings.	Total earnings.	Traffic Train-miles run.		
	Number of passengers.	Coaching receipts.	Weight carried.	Receipts.			Coaching.	Merchandise.	Total
		Rs. A. P.	Mds. s.	Rs. A. P.	Rs. A. P.	Rs. A. P.			
Total traffic for the week ...	34,567	15,877 0 0	96,444 0	5,103 0 0	151 0 0	21,131 0 0	4,074	3,318	7,
Or per mile of railway	266	†122 0 0	693 0	37 0 0	1 0 0	160 0 0	.....	...	.....
For previous 10 weeks of half-year*	398,914	1,58,133 0 0	7,10,804 0	59,401 0 0	29,343 0 0	2,46,876 0 0	43,159	31,474	74
Total for 11 weeks ...	433,481	1,74,009 0 0	7,97,248 0	64,504 0 0	29,494 0 0	2,68,007 0 0	47,233	34,792	8
Comparison.									
Total for corresponding week of previous year	34,448	14,842 0 0	94,727 0	5,697 0 0	280 0 0	20,828 0 0	4,511	2,693	7
Per mile of railway corresponding week of previous year ...	265	†114 0 0	681 0	41 0 0	2 0 0	157 0 0	.....	.....	...
Total to corresponding date of previous year	460,905	1,88,226 0 0	12,23,890 0	85,424 0 0	19,155 0 0	2,92,805 0 0	53,529	31,413	84

* Audited up to week ended 28th January 1905.
† Coaching traffic calculated on 130 miles only.

ASSAM-BENGAL RAILWAY.

Approximate Return of traffic for the week ended 18th March 1905 on 737 miles open for all descriptions of traffic, and an additional 3 miles for goods traffic only.

	Coaching Traffic.		Merchandise and Mineral Traffic.		Other earnings (estimated), including steam-boat.	Total earnings.	Traffic Train-miles run.		
	No. of passengers.	Coaching receipts.	Weight carried.	Receipts.			Coaching.	Merchandise.	Total
		Rs. A. P.	Mds. s.	Rs. A. P.	Rs. A. P.	Rs. A. P.			
Total traffic for the week ...	44,128	28,854 0 0	1,45,037 0	23,916 0 0	1,451 0 0	54,231 0 0	10,551	16,000	26,55
Or per mile of railway	59·88	39·15	196·90	32·33	1·97	73·64	14·32	21·63	3
For previous 10 weeks of half-year	490,490	3,26,345 0 0	16,56,024 0	2,61,320 0 0	27,456 0 0	6,15,151 0 0	104,862	148,900	253,76
Total for 11 weeks ...	534,618	3,55,199 0 0	18,01,061 0	2,85,236 0 0	28,907 0 0	6,69,382 0 0	115,420	164,903	280,32
Comparison.									
Total for corresponding week of previous year	48,469	29,501 0 0	1,50,698 0	20,023 0 0	1,412 0	50,926 0 0	9,959	13,369	23,32
Per mile of railway corresponding week of previous year ...	65·62	39·79	203·36	27·87	1·91	68·57	13·55	18·00	31
Total to corresponding date of previous year	527,790	3,50,531 0 0	17,16,483 0	2,55,069 0 0	20,224 0 0	6,33,825 0 0	98,894	112,187	204,76

FINANCIAL YEAR.

Approximate Statement of Gross Receipts of the Assam-Bengal Railway.

Receipts for week ending 18th March 1905.			Receipts for week ending 19th March 1904.			Total receipts from 1st April 1904 to 18th March 1905.			Total receipts from 1st April 1903 to 19th March 1904.			Total increase in 1905.	Total decrease in 1905.
Mean mileage worked.	Receipts.	Per mile worked	Mean mileage worked.	Receipts.	Per mile worked.	Mean mileage worked.	Total receipts.	Per mile worked per week.	Mean mileage worked.	Total receipts.	Per mile worked per week.		
	Rs.	Rs.		Rs.	Rs.		Rs.			Rs.		Rs.	
740	54,231	73·44	740	50,626	68·57	740	23,92,452	...	740	24,79,676	...	4,13,359	.....

DARJEELING-HIMALAYAN RAILWAY COMPANY, LIMITED.

		Rs.	A.	P.	Rs.	A.	P.
Approximate earnings for the week ending 25th March 1905	Coaching ...	5,190	0	0	17,863	0	0
	Goods ...	12,602	0	0			
	Other earnings ...	71	0	0			
Audited earnings for the corresponding period of 1904	Coaching ...	6,483	0	0	17,577	0	0
	Goods ...	11,029	0	0			
	Other earnings ...	65	0	0			
	Increase ...				286	0	0
Receipts per mile for the week ending 25th March 1905	...		...		350	4	1
Ditto for the corresponding period of 1904	...		...		344	10	4
	Increase ...				5	9	9
Receipts from 1st January to 25th March 1905	...		...		1,72,446	0	0
Ditto for the corresponding period of 1904	...		...		1,93,623	0	0
	Decrease ...				21,177	0	0

Printed at the Printing Office, and published by the Book Dé, of the Bengal Secretariat, Writers' Buildings, in the City of Calcutta, on 5th April 1905.

REGISTERED No. C 209.]

No. 15 of 1905

The Calcutta Gazette.

WEDNESDAY, APRIL 12, 1905.

CONTENTS.

	Page
PART I.—Orders and Notifications by the Lieutenant-Governor of Bengal, the High Court, Government Treasury, etc.	689—712
PART IA.—Orders and Notifications by the Government of India	91
PART IB.—Orders by the Lieutenant-Governor of Bengal	63—65
PART II.—Advertisements	411—468
PART III.—Acts of the Bengal Council	Nil
PART IV.—Bills of the Bengal Council	Nil
PART IVA.—Proceedings of the Bengal Legislative Council	Nil
PART V.—Acts of the Governor-General's Council assented to by the Governor-General	Nil
PART VI.—Bills introduced into the Council of the Governor-General for making Laws and Regulations or published under Rule 25	Nil
APPENDIX.—Marine Notifications	113—120
APPENDIX.—List of persons liable to serve on Common and Special Juries in the High Court for year 1905	1—120
SUPPLEMENT No. 15:—	
Report of the Bruce Institution for the year 1904	509
Statistical Return of Crops, Prices-current, Abstract of Major and Minor Works, Traffic by land and sea, Results of Meteorological Observations, Railway Traffic Receipts, etc., etc.	513—544

PART I.

Orders and Notifications by the Lieutenant-Governor of Bengal, the High Court, Government Treasury, &c.

ORDERS BY THE LIEUT.-GOVERNOR OF BENGAL.

No. 2815A.

APPOINTMENTS AND TRANSFERS.

GENERAL.—*No. 2658A.—The 5th April 1905.*—Mr. M. Smither, Joint-Magistrate and Deputy Collector, is appointed to act as District and Sessions Judge, Dacca, during the absence, on leave, of Mr. B. V. Nicholl, or until further orders, on being relieved of his appointment as Officiating District and Sessions Judge, Patna.

Patna.
Dacca.

No. 2692A.—The 7th April 1905.—Pandit Rama Ballabh Misra, Deputy Magistrate and Deputy Collector, Bhagalpur, is appointed to act, until further orders, as Personal Assistant to the Commissioner of the Patna Division.

Bhagalpur.
Patna.

No. 2696A.—The 7th April 1905.—Babu Annada Charun Gupta, Deputy Magistrate and Deputy Collector, Dinajpur, is appointed to act as Personal Assistant to the Commissioner of the Rajshahi Division, during the absence, on leave, of Babu Manasa Ranjan Sen, or until further orders.

Dinajpur.
Jalpaiguri.

No. 2698A.—The 7th April 1905.—Babu Jogindra Nath Sarkar, substantive *pro tempore* Deputy Magistrate and Deputy Collector, Faridpur, is transferred to the head-quarters station of the Dinajpur district.

Faridpur.
Dinajpur.

No. 30A.D.—The 10th April 1905.—Mr. Manmatha Krishna Deb, Assistant Magistrate and Collector, is appointed to act, until further orders, in the second grade of Joint-Magistrates and Deputy Collectors, and is posted temporarily to the head-quarters station of the Mymensingh district, on being relieved of his present appointment as Officiating Magistrate and Collector of that district.

Mymensingh.

No. 49A.D.—The 11th April 1905.—Babu Purna Chunder Nag, Deputy Magistrate and Deputy Collector, on leave, is posted to the head-quarters station of the Cuttack district.

Cuttack.

POLICE.—*No. 1A.D.—The 10th April 1905.*—Mr. W. A. Knyvett, Assistant Superintendent of Police, in charge of the Noakhali District Police, is transferred to Bhagalpur and appointed to hold charge of the school which is to be opened for the training of constables.

Noakhali.
Bhagalpur.

EDUCATION.—*No. 2A.D.—The 10th April 1905.*—Babu Nalini Mohan Sanyal, Head Master, Krishnagar Collegiate School (class VII of the Provincial Educational Service), is appointed to be Assistant Inspector of Schools, Dacca Division.

Nadia.
Dacca.

No. 4A.D.—The 10th April 1905.—Babu Mohini Mohan Dutt, Head Master, Patna Collegiate School, and now Officiating Professor, Hooghly College (class VII of the Provincial Educational Service), is appointed to be Head Master of the Krishnagar Collegiate School.

Patna.
Hooghly.
Nadia.

No. 6A.D.—The 10th April 1905.—Babu Biswesswar Sen, Head Master, Dacca Training School, and now Officiating Head Master, Patna Collegiate School (class VI of the Provincial Educational Service), is confirmed in the latter appointment.

Dacca.
Patna.

No. 8A.D.—The 10th April 1905.—Babu Kisori Mohan Sen Gupta, Professor, Hooghly College, and now Officiating Head Master, Dacca Training School (class VI of the Provincial Educational Service), is confirmed in the latter appointment.

Hooghly.
Dacca.

No. 10A.D.—The 10th April 1905.—Babu Syama Das Mukherjea, Professor, Bethune College, and now Officiating Professor, Presidency College (class VIII of the Provincial Educational Service), is confirmed in the latter appointment.

Calcutta.

No. 12A.D.—The 10th April 1905.—Babu Bijay Gopal Mukerjea, Professor, Ravenshaw College, Cuttack, and now Officiating Professor, Bethune College (class VII of the Provincial Educational Service), is confirmed in the latter appointment.

Cuttack.
Calcutta.

No. 14A.D.—The 10th April 1905.—Babu Gopal Chandra Ganguli, Officiating Professor, Ravenshaw College, Cuttack, is confirmed in that appointment and is appointed to class VIII of the Provincial Educational Service in the resulting vacancy arising from the retirement of Babu Kumud Bandhu Bose.

Cuttack.

PROMOTION.

GENERAL.—*No. 2738A.—The 8th April 1905.*—Mr. H. LeMesurier, C.I.E., Magistrate and Collector, second grade, is promoted to the first grade of Magistrates and Collectors, *vice* Mr. E. B. Harris, resigned.

Calcutta.

Mr. LeMesurier will continue to act as Secretary to the Board of Revenue, Lower Provinces, until further orders.

LEAVE.

GENERAL.—*No. 2656A.—The 5th April 1905.*—Mr. B. V. Nicholl, District and Sessions Judge, Dacca, is allowed combined leave for eight months with effect from the 7th April 1905 or any subsequent date on which he may be relieved, viz., privilege leave for three months, under article 260 of the Civil Service Regulations, and furlough for the remaining period under article 308 (*b*) of the Regulations.

Dacca.

No. 2694A.—The 7th April 1905.—Babu Manasa Ranjan Sen, Personal Assistant to the Commissioner of the Rajshahi Division, is allowed leave for three months, under article 260 of the Civil Service Regulations, with effect from the 15th April 1905, or any subsequent date on which he may be relieved.

Jalpaiguri.

VOLUNTEERS.—*No. 34A.D.—The 10th April 1905.*—Lieutenant-Colonel E. Henry, Commandant, Calcutta Light Horse, has been granted, by the General Officer Commanding the Presidency Brigade, leave of absence for six months, with effect from the 1st April 1905.

POWERS.

GENERAL.—*No. 2701A.—The 7th April 1905.*—Babu Jatindra Mohun Banerjee, Deputy Collector, Noakhali, is vested with the powers of a Collector, under Act I of 1894, in that district.

Noakhali.

The following are republished from the *Assam Gazette* :—

No. 2705G.—The 6th April 1905.—Mr. F. J. Monahan, I.C.S., Secretary to the Chief Commissioner of Assam, is granted privilege leave for 2 months and 18 days, combined with furlough for 9 months and 12 days, under articles 233 and 308 (*b*) of the Civil Service Regulations, with effect from the 9th April 1905, or the subsequent date on which he may avail himself of the leave.

No. 2559G.—The 1st April 1905.—General Department Notification No. 9809G., dated the 16th November 1904, granting four days' privilege leave to Mr. A. T. Halliday, Assistant Superintendent of Police and Subdivisional Officer, North Cachar, is cancelled.

No. 2560G.—The 1st April 1905.—Privilege leave of absence for forty-one days, under article 260 of the Civil Service Regulations, was granted to Mr. A. T. Halliday, Assistant Superintendent of Police and Subdivisional Officer, North Cachar, with effect from the 23rd December 1904.

No. 2598G.—The 3rd April 1905.—The following is published:—

The undermentioned officers have been granted by His Majesty's Secretary of State for India extension of leave or permission to return to duty as advised in List dated the 3rd March 1905:—

Name.	Service.	Appointment.	Period and nature of extension.
Browne, Lord Terence ..	...	Assistant Superintendent of Police, Assam	Six months on medical certificate.

Name.	Service.	Appointment.	Date on which permitted to return.
Arbuthnott, J. C., C.I.E.	I.C.S. ...	Deputy Commissioner, Assam ..	Before expiry of leave.

No. 2716G.—The 6th April 1905.—In consequence of the retirement of Lieutenant-Colonel H. St. P. Maxwell, C.S.I., I.A., Deputy Commissioner, 1st grade, the following substantive promotions are made in the Assam Commission, with effect from the 17th March 1905:—

* * * * * * * *

Mr. D. H. Lees, I.C.S., Deputy Commissioner, 3rd grade, to be Deputy Commissioner, 2nd grade.

„ F. E. Jackson, I.C.S., Assistant Commissioner, 1st grade, to be Deputy Commissioner, 3rd grade.

„ H. A. C. Colquhoun, I.C.S., Assistant Commissioner, 2nd grade, to be Assistant Commissioner, 1st grade.

„ H. L. Salkeld, I.C.S., Assistant Commissioner, 3rd grade, to be Assistant Commissioner, 2nd grade.

R. W. CARLYLE,
Offg. Chief Secy. to the Govt. of Bengal.

REVENUE DEPARTMENT.

NOTIFICATIONS.

No. 2031L.R.—The 4th April 1905.—The following correction is hereby made in Government Notification No. 376L.R., dated the 23rd January 1905, published in Part I, page 91, of the *Calcutta Gazette* of the 25th idem, relating to the survey and the preparation of a record-of-rights in respect of estate char Pakuria, in the district of Nadia:—

Nadia.

For "tauzi No. 833" *read* "tauzi No. 833/1."

No. 2032L.R.—The 4th April 1905.—In exercise of the powers conferred on him by section 189 and sub-section (6) of section 190 of the Bengal Tenancy Act, VIII of 1885, the Lieutenant-Governor of Bengal is pleased to direct that the words "including all or any of the powers of a Collector under the Bengal Survey Act, 1875," shall be added at the end of clause (*a*) of rule 1, Chapter VI of the rules under the said Act, as amended by the Bengal Tenancy (Amendment) Act, III (B.C.) of 1898, published under Notification No. 111, dated the 10th January 1899, at pages 33—42, Part I of the *Calcutta Gazette* of the 11th idem.

No. 2060L.R.—The 6th April 1905.—The Notification No. 1197L.R., dated the 28th February 1905, published at page 414, Part I of the *Calcutta Gazette* of the 8th March 1905, granting Babu Bhupendra Nath Gupta, Deputy Magistrate and Deputy Collector, Contai, leave on private affairs for twenty-one days, is hereby cancelled.

Midnapore.

No. 2101L.R.—The 11th April 1905.—Babu Braja Nath Rai, Sub-Deputy Collector, now employed as an Assistant Settlement Officer in the district of Ranchi, is allowed privilege leave for one month, under article 242 (*a*) of the Civil Service Regulations, with effect from the date on which he may be relieved of his settlement duties.

Ranchi.

R. W. CARLYLE,
Offg. Chief Secy. to the Govt. of Bengal.

NOTIFICATION.

No. 1899.—The 5th April 1905.—The following draft of rules which it is proposed to make in exercise of the powers conferred by section 14 of the Glanders and Farcy Act, XIII of 1899, is published for general information, and notice is hereby given that the draft will be taken into consideration by the Lieutenant-Governor on the 12th May 1905. Any objection or suggestion which may be offered with respect to the draft rules should be submitted to the Chief Secretary to the Government of Bengal on or before that date.

These rules, when finally approved, will have force within the limits of "Calcutta," as defined in Schedule I of Act III (B.C.) of 1899 and within the limits of the following Municipalities:—

North Barrackpore;	Baranagore;
South Barrackpore;	Cossipore-Chitpur;
Titaghur;	Manicktolla;
Panihati;	Tollygunge;
Kamarhati:	South Suburban;
North Dum-Dum;	Garden Reach;
South Dum-Dum;	Howrah;

and within the limits of the area bounded on the north by the Municipality of North Dum-Dum; on the south by the Municipality of South Dum-Dum; on the east by the Belgachia-Barasat Road, and on the west by the Municipalities of Kamarhati and Baranagore.

The rules have been specially framed for metropolitan areas and are proposed in lieu of those published under Notification No. 3124Agri., dated the 20th August 1900.

R. W. CARLYLE,
Offg. Chief Secy. to the Govt. of Bengal.

DRAFT RULES.

Rule I.—The operations under the Glanders and Farcy Act, 1899, in Calcutta and within the Municipalities and area referred to above, shall be under the direction of the Superintendent or other officer in charge of the Bengal Civil Veterinary Department; and all Inspectors and Veterinary Practitioners duly appointed under the Act, and members of the Veterinary Preventive force appointed to assist the Inspectors and Veterinary Practitioners in carrying out the purposes and objects of this Act, shall be under the control of the said Superintendent or other officer in charge of the said Department.

Rule II—The owner or person in charge of a horse which he believes, or has reason to believe, to be diseased within the meaning of section 2 (1) of the Act, shall report the case within twenty-four hours to an Inspector appointed under the Act or to a Police Officer who shall at once give information of the case to an Inspector appointed under the Act. Such owner or person shall also, if practicable, remove the animal to some isolated building within 50 yards of the stable, building, shed, enclosed place, open lines or other place where the animal has been standing, or to a remote part of such stable, building, shed, enclosed place, open lines or other place. He shall also keep it as far away from other horses as possible. The Inspector appointed under the Act shall also detain in such place any horse which has been in contact with or near the diseased animal or in the same stable, building, shed, enclosed place, open lines or other place until a license for its removal is granted in the form given in Schedule No. II attached to these rules.

Rule III.—An Inspector appointed under the Act may enter and search any enclosure, field, building or other place for the purpose of ascertaining whether there is therein any horse which is diseased; and, as far as practicable, he shall conduct his search in the presence of the owner of the horse or of the person in charge of the horse or of the building, field, enclosure or other place in which the horse is kept. The Inspector shall, if required to do so, before entering and searching any such building, field, enclosure, or other place, show the certificate of his appointment, which shall be in the form given in Schedule No. V attached to these rules.

Rule IV.—If an Inspector appointed under the Act believes, or has reason to believe, that the owner or person in charge of a horse is absenting himself in order to evade the provisions of the Act, or the rules framed thereunder, or if the Inspector meets with resistance or obstruction, he may nevertheless enter for the purpose of search any building, field, enclosure or other place, in which he believes, or has reason to believe, that a diseased horse is kept, provided that he be accompanied by not less than two members of the Veterinary Preventive Force.

Rule V.—Subject to the provisions of the two last rules, an Inspector appointed under the Act shall seize, and may hand over to a member of the Veterinary Preventive force for

detention, any horse which he believes, or has reason to believe, to be diseased. As soon as possible and with due care to prevent contagion to other horses and human beings, such horse shall be removed to the Contagious Diseases Hospital at Belgachia, there to be dealt with in accordance with the provisions of the Act. Any horse thus seized may be detained in the said hospital for as long as may be necessary, and may be subjected to any recognised test or tests.

Rule VI.—The Contagious Diseases (Animals) Hospital attached to the Government Veterinary College at Belgachia will be ordinarily used as a place for isolating, examining, treating or otherwise dealing with animals seized, under section 7, clauses (1) and (2) of the Act.

Rule VII.—When an Inspector appointed under the Act seizes a horse under section 6 of the Act, he shall present to the owner or person in charge of it a printed copy of these rules. If such Inspector is a Veterinary Practitioner appointed under the Act, and the horse is found on examination to be diseased, he shall also present to such owner or person a certificate in the form given in Schedule No. III attached to these rules. If the Inspector is not a Veterinary Practitioner appointed under the Act, and if the horse is found on examination by such a practitioner to be diseased, he shall, as soon as practicable, procure from such practitioner a certificate of the nature referred to and serve a copy of it on the said owner or person in charge of the horse. Should the owner or person in charge be absent at the time of seizure, the documents referred to shall be nailed on to a prominent place within or without the premises where the seizure took place.

Rule VIII.—If the Veterinary Practitioner certifies under section 8 (1) of the Act that a horse is diseased, it shall be destroyed humanely in the presence of an Inspector appointed under the Act, and the carcass shall be disposed of in the presence of a member of the Veterinary Preventive Force.

Rule IX.—If, after completing the examination, the Veterinary Practitioner does not certify that a horse is diseased, he shall restore it to the owner or his agent at once, if he is present; and the expenses incurred shall be debited to Government. If, however, the owner or his agent is absent, due notice in the form given in Schedule No. IV, attached to these rules, shall be at once served upon the owner or his agent to remove the animal within seven days. This notice may be served either personally or by leaving it at the owner's or agent's last known residence or place of business; and in the latter case, a copy of it shall be posted at the police-station in the jurisdiction of which the animal was seized. If the animal is not removed within the prescribed period of seven days, it may be dealt with in one of the following ways, namely:—

(*a*) The animal may be sold to defray expenses. In that case any balance that may remain may be kept at the owner's disposal for two months, after which time it shall be the property of Government.
(*b*) The animal may be sent to the Pinjrapole
(*c*) The animal may be destroyed.

Rule X.—When a horse or carcass, which is diseased or believed to be diseased, is about to be removed to another place for examination, slaughter, burial, cremation or any other lawful purpose, the owner or person in charge of such horse or carcass shall attach a suitable covering over its muzzle and to any part of its body from which contagious or infectious matter may escape, so as to minimise danger from contact during removal.

Rule XI.—If a diseased horse dies, the owner or the person in charge of it shall, as soon as possible and with all due care to prevent contagion to other horses and human beings, cause the carcass to be taken to a suitable place to be there burnt or buried or otherwise destroyed in the safest and most efficacious manner practicable. The means to be adopted shall be decided in each case by an Inspector appointed under the Act and shall be recorded in writing; and the work shall be carried out under the supervision of a member of the Veterinary Preventive Force.

Rule XII.—The owner or person in charge of infected articles or places shall be responsible for carrying out the following orders as soon as possible after the issue of a notice by an Inspector under section 9 of the Act:—

(*i*) Every piece of stable gear shall be destroyed by fire, except iron-work, which shall be made red hot.

(*ii*) The roofs of buildings shall be well cleaned and freed from all dust and cobwebs.

(*iii*) The walls shall be scrap[illegible] wooden mangers and feeding boxes shall be burnt, and all woodwork [illegible]s been within reach of horses shall be carefully washed with soft soap and hot water, mixed with crude carbolic acid or phenyle in the proportion of one part of acid or phenyle to twenty parts of water.

(*iv*) The floor, if of mud or brick, shall be dug up for a depth of at least eight inches, and if urine has percolated to a greater depth, to that depth; and fresh material shall be laid down. If the floor is of cement, and is in good repair, it shall be treated in the same way as the walls; but, if it is not in good repair, it shall be treated as provided in this rule.

(*v*) All refuse derived from cleansing, and any dung, litter, straw, grass or hay shall be taken to a suitable place and shall be burnt. Any material left after burning shall be buried according to orders issued by an Inspector appointed under the Act.

(*vi*) All buildings shall be thoroughly whitewashed with good lime and water, to which five *per cent.* of crude carbolic acid or phenyle has been added.

(*vii*) Temporary stables of straw, grass or similar materials shall be pulled down, removed to a suitable place and burnt, the floor being treated in the manner prescribed in sub-clause (*v*) above.

(*viii*) The woodwork of carts shall be thoroughly scraped, washed with soap and hot water containing five *per cent.* of crude carbolic acid or phenyle, and exposed to the sun for two days, after which the treatment shall be repeated.

(*ix*) The poles or shafts, dash-boards and other parts of carriages with which a diseased animal has come into contact shall be washed with soap and hot water containing five *per cent.* of crude carbolic acid or phenyle, the paint being scraped off and fresh paint being applied. The rest of the vehicle shall be thoroughly washed with soap and hot water containing one part of crude carbolic acid or phenyle to twenty parts of water.

Provided that, for reasons given in writing, an Inspector appointed under the Act may prescribe any other method of disinfection which the special circumstances of a particular case may require.

Rule XIII—The owner or person in charge of a vessel, railway truck or any other conveyance which has been used for the transport of a diseased horse shall, within 24 hours of receipt of a notice issued under section 9 of the Act, have the said vessel, railway truck or conveyance and all the fittings thereof disinfected. In the case of vessels, the rules laid down in sub-clauses (*i*), (*ii*), (*iii*), (*v*) and (*vi*) of Rule XII shall be observed as far as applicable. The floor shall be treated in the manner prescribed in sub-clause (*iii*) of that rule in regard to walls; and all battens shall be removed and burnt.

Rule XIV—All stables, buildings, carts, carriages, or vessels which have been disinfected under Rule XII shall be examined after disinfection by an Inspector appointed under the Act; and the owner or the person in charge of such stables, buildings, carts, carriages or vessels shall give him all reasonable facilities for so doing. If the Inspector is not satisfied that the work of disinfection has been thoroughly done, he may pass such orders as he may consider necessary for the proper disinfection of the stables, etc., and the owner or person in charge of such stables, etc., shall be bound to carry out such orders without delay.

Rule XV.—The entire cost of carrying out the provisions of the rules under the Act shall be borne by the owner or the person in charge of the horse in respect of which a Veterinary Practitioner appointed under the Act has given a certificate that it was diseased; and the cost shall be recoverable as a fine. The account rendered to the owner or person in charge of the horse shall be in the form given in schedule No. III attached to these rules. A part or the whole of the costs may, however, be remitted and debited to Government by the Superintendent of the Civil Veterinary Department, if it is proved to his satisfaction that the debtor has executed promptly and thoroughly all the duties laid upon him by the Act.

Rule XVI.—In the event of obstruction, the Police shall be bound, on the written application of an Inspector, Veterinary Practitioner, or a member of the Veterinary Preventive force, to render such officers such assistance as may be necessary to enable them to perform duly their duties under the Act.

Rule XVII.—An Inspector appointed under the Act or a member of the Veterinary Preventive force, unless he is a gazetted or a commissioned officer, shall wear a distinctive departmental uniform when on duty, except in special cases in which he holds a written authority from the Superintendent, Civil Veterinary Department, that he is exempted from the obligation so to do.

Rule XVIII—Except as provided in these rules, no person shall intentionally or negligently cause or permit any diseased horse to stray or to be worked, led or driven, in a public thoroughfare, road, street or place.

Rule XIX.—Whoever refuses or neglects to comply with, or commits a breach of, any rule framed under this Act shall be punishable with imprisonment for a term which may extend to one month, or with a fine which may extend to fifty rupees, or with both.

NOTE.—Under section 2 (2) of the Act, these rules apply also to asses and mules.

SCHEDULE No. I.

CERTIFICATE UNDER SECTION 8 OF THE GLANDERS AND FARCY ACT, XIII OF 1899.

I , Veterinary Practitioner under the Glanders and Farcy Act, XIII of 1899, hereby certify as follows:—

DESCRIPTION:—

Breed

Sex

Colour

Apparent age

Brand and other marks of identification.

A horse, as noted in the margin, said to belong to , or to have been in charge of of , having been seized under the said Act by Inspector I have this day, the of 190 examined the same and believe it to be diseased within the meaning of section 2(1) of the said Act.

BELGACHIA.

Calcutta,

Veterinary Practitioner.

SCHEDULE No. II.

License to remove a horse.

—oo—

GLANDERS AND FARCY ACT, 1899.

LICENSE for the removal of the under mentioned horse/horses which has/have been with a diseased horse.

Under section 11 of the Glanders and Farcy Act, 1899, and in accordance with the provisions of the rules made under section 14 of the said Act, published as specified in the margin, I hereby grant this day of 190 to , the owner or person in charge of the horse described in the margin, a license to remove the same from to on the conditions and with the precautions noted below—

Revenue Department Notification No. , dated , published in the Calcutta Gazette of the

DESCRIPTION :—

Breed

Sex

Colour

Apparent age

Brand and other marks of identification :—

CONDITIONS :—

PRECAUTIONS :—

Dated *190* . *Inspector.*

NOTE.—Section 11 of the Glanders and Farcy Act provides as follows :—

No person in charge of any horse which has been in the same field, building, or place as, or in contact with, a diseased horse, shall remove such horse, except in good faith for the purpose of preventing infection, or under a license to be granted by the Inspector and subject to the conditions of the license

Schedule No. III.

GLANDERS AND FARCY ACT, XIII OF 1899.

No.

BELGACHIA, CALCUTTA,

The 190 .

To

SIR,

I BEG to inform you that the horse, as noted in the margin, seized on the _____ has this day been destroyed in accordance with rule of Act XIII of 1899, having been found to be suffering from disease.

DESCRIPTION :—
Breed
Sex
Colour
Apparent age .....
Brand and other marks of identification :—

.....

The charges, as detailed below, amount to Rs. which I request you to be so good as to remit to this office within 14 days.

Yours faithfully,

	Rs.	A.	P.
Hospital fee			
Feeding charges for days, at 4 annas per diem.			
Disposal of carcass			
Cost of disinfection			
Total ...			

Chief Inspector, C. V. D., Beng l.

Schedule No. IV.

To

SIR,

I BEG to inform you that the horse, as noted in the margin, seized under the Glanders and Farcy Act, XIII of 1899, has been found to be free from disease. You are, therefore, requested to remove the same on or before the of 190 . Should the animal not be removed, it will be dealt with in accordance with Rule IX of the Act, a copy of which is printed below.

DESCRIPTION :—
Breed ... — — —
Sex ....
Colour . .
Apparent age ...—
Brand and other marks of identification :—
.. ..

Yours faithfully,

Rule IX.—If, after completing the examination, the Veterinary Practitioner does not certify that a horse is diseased, he shall restore it to the owner or his agent at once if he is present; and the expenses incurred shall be debited to Government. If, however, the owner or his agent is absent, due notice in the form given in Schedule No. IV, attached to these rules, shall be at once served upon the owner or his agent to remove the animal within seven days. This notice may be served either personally or by leaving it at the owner's or agent's last known residence or place of business; and in the latter case, a copy of it shall be posted at the police-station in the jurisdiction of which the animal was seized. If the animal is not removed within the prescribed period of seven days, it may be dealt with in one of the following ways, namely:—

(*a*) The animal may be sold to defray expenses. In that case any balance that may remain may be kept at the owner's disposal for two months, after which time it shall be the property of Government.

(*b*) The animal may be sent to the Pinjrapole.

(*c*) The animal may be destroyed.

Schedule No. V.

CERTIFIED that

of

has been appointed in Government Notification, ntoed in the margin, to be an Inspector for the purposes of Act XIII of 1899.

BELGACHIA,

The *190* .

Supdt, Civil Vety. Dept., Bengal.

DECLARATION.

No. 2091.—The 11th April 1905.—Whereas it appears to the Lieutenant-Governor of Bengal that land is required to be taken by Government at the expense of the Noakhali Municipality for a public purpose, viz., for a surface drain by the south side of Ganga Charan road in Fakirtala Ward, in the village of Sallagatia, pargana Bhulua, zilla Noakhali, it is hereby declared that for the above purpose a piece of land measuring, more or less, 1 cottah 1 chitak of standard measurement, bounded on the—

Noakhali.

North—Ganga Charan road,
South—Hakimaddy's land,
East—Fakirtola roadside drain, and
West—Ganga Charan road,

is required within the aforesaid village of Sallagatia.

This declaration is made, under the provisions of section 6 of Act I of 1894, to all whom it may concern.

A plan of the land may be inspected in the office of the Collector of Noakhali.

R. W. CARLYLE,
Offg. Chief Secy. to the Govt. of Bengal.

DECLARATION.

No. 2094.—The 11th April 1905.—Whereas it appears to the Lieutenant-Governor of Bengal that land is required to be taken by Government at the expense of Halishahar Municipality for a public purpose, viz., for the construction of a Municipal market, in the village of Bizpur, pargana Halishahar, zilla 24-Parganas, it is hereby declared that for the above purpose a piece of land measuring, more or less, 4 bighas of standard measurement, bounded on the north by Bhut Nath Kantrah's land, on the east by conservancy road, on the south by Eastern Bengal State Railway land and Bhut Nath Kantrah's land, and on the west by Bhut Nath Kantrah's land, is required within the aforesaid village of Bizpur.

24-Parganas.

This declaration is made, under the provisions of section 6 of Act I of 1894, to all whom it may concern.

A plan of the land may be inspected in the office of the Municipal Commissioners of Halishahar.

R. W. CARLYLE,
Offg. Chief Secy. to the Govt. of Bengal.

DECLARATION.

No. 2097.—The 11th April 1905.—Whereas it appears to the Lieutenant-Governor of Bengal that land is required to be taken by Government at the public expense for a public purpose, viz., for watering arrangement at Monomohini station yard of the Kaunia-Bonarpara extension of Eastern Bengal State Railway, in the village of Manmath, pargana Bamandanga, zilla Rangpur, it is hereby declared that for the above purpose a piece of land, 230 feet in length and varying from 10 to 25 feet in breadth, measuring, more or less, 4 cottahs 13 77 chitaks of standard measurement, corresponding to 12·85 poles, bounded on the east by Railway land, west by Ghagat river, and north and south by lands of Bamandanga zamindari, is required within the aforesaid village of Manmath.

Rangpur.

Mines of coal, iron-stone, slate or other mineral lying under the land, except only such parts of the mines and mineral as it may be necessary to dig or carry away, or use in the construction of the work for the purpose of which the land is being acquired, are not needed.

This declaration is made, under the provisions of section 6, Act I of 1894, and section 3, clause (1), Act XVIII of 1885, to all whom it may concern.

A plan of the land is available for inspection in the office of Executive Engineer, Kaunia-Bonarpara extension, Eastern Bengal State Railway, at Kaunia.

R. W. CARLYLE,
Offg. Chief Secy. to the Govt. of Bengal.

DECLARATION.

No. 2103.—The 11th April 1905.—Whereas it appears to the Lieutenant-Governor of Bengal that land is required to be taken at the expense of the East Indian Railway Company for a public purpose, viz., for the construction of an assisted siding off Ondal-Sainthia Chord Railway to serve the British India Steam Navigation Company's Ukara pits at Bankola, in the village of Chak Bankola,

Burdwan.

pargana Shergarh, zilla Burdwan, it is declared that for the above purpose a piece of land measuring, more or less, 19·66 acres, is required within the aforesaid village.

Mines of coal, iron-stone, slate or other minerals lying under the land, except only such parts of the mines and minerals as it may be necessary to dig or carry away, or use in the construction of the work for the purpose of which the land is being acquired, are not needed.

This declaration is made, under the provisions of section 6, Act I of 1894, and section 3, clause (1), Act XVIII of 1885, to all whom it may concern.

A plan of the land may be inspected in the office of the Engineer in charge, Ondal-Sainthia Chord Railway, Baboisol *viâ* Ranigunge.

R. W. CARLYLE,
Offg. Chief Secy. to the Govt. of Bengal.

DECLARATION.

No. 2104.—The 11th April 1905.—Whereas it appears to the Lieutenant-Governor of Bengal that land is required to be taken by Government at the expense of the Suri Municipality for a public purpose, viz., for raising the level of a swamp and thereby improving the sanitary condition of the locality in the Harietganj Ward of the Suri Municipality, in pargana Khatanga, zilla Birbhum, it is hereby declared that for the above purpose a piece of land measuring, more or less, 1 bigha 19 cottahs 10 gundas of standard measurement, bounded on the north by the houses of Khanta Baisnami and Borada Benani and Satgoria tank, on the east by the houses of Sital Hari and Prolhad Hari, on the south by the houses of Nobogopal Mittra, and on the west by the Sunrigoria tank and the houses of Babu Lal Viswas, is required within the aforesaid Harietganj Ward of the Suri Municipality.

Birbhum.

This declaration is made, under the provisions of section 6 of Act I of 1894, to all whom it may concern.

A plan of the land may be inspected in the office of the Collector of Birbhum.

R. W. CARLYLE,
Offg. Chief Secy. to the Govt. of Bengal.

DECLARATION.

No. 2105.—The 11th April 1905.—Whereas it appears to the Lieutenant-Governor of Bengal that land is required to be taken by Government at the expense of the East Indian Railway Company for improvements at the Chinsura station, in the village of Gungnah, tahsil Arsha, district Hooghly, it is hereby declared that for the above purpose two pieces of land, measuring, more or less, 1 bigha 19 cottahs and 14 chitaks of standard measurement (corresponding to 0·66 acre), bounded as stated below, are required within the aforesaid village of Gungnah :—

Hooghly.

Plot No. 1.—1 bigha 14 cottahs 5 chitaks—bounded on the north, south and west by the waste land, tank and side cutting belonging to Dr. Dina Nath Chandra, of Chandernagore, and on the east by the East Indian Railway Company's land.

Plot No. 2.—5 cottahs 9 chitaks—bounded on the north, south and west by the waste land and tank belonging to Dr. Dina Nath Chandra, of Chandernagore, and on the east by the East Indian Railway Company's land.

Mines of coal, iron-stone, slate or other minerals lying under the land, except only such parts of the mines and minerals as it may be necessary to dig or carry away, or use in the construction of the work for the purpose of which the land is being acquired, are not needed.

This declaration is made, under the provisions of section 6 of Act I of 1894, and section 3, clause (1), Act XVIII of 1885, to all whom it may concern.

A plan of the land may be inspected in the office of the Hooghly Collectorate and in that of the District Engineer, East Indian Railway, at Howrah.

R. W. CARLYLE,
Offg. Chief Secy to the Govt. of Bengal.

NOTIFICATION.

UNDER the provisions of section 2 of Act VI of 1876, as amended by Act V of 1884, Babu Ashu Tosh Mukherjee, General Manager of the Wards and Encumbered Estates in the district of Ranchi, is appointed to be the Manager (and the management is vested in him) of the undermentioned immoveable property of Manki Jagarnath Sahi, of Jonah, in the district of Ranchi, and of any other immoveable property to which the said holder is entitled

in his own right, or which he is entitled to redeem, or which may be acquired by, or devolve on, him or his heirs during the continuance of such management:—

Name of estate.	Name of holder.
Jonah,	Manki Jagarnath Sahi.

comprising the following villages and lands:—

1. Bari.
2. Guro.
3. Jonah.
4. Chandidih.
5. Ekirhatu.
6. Bandar Chuina.
7. Simarbera.
8. Kasidih.
9. Mahnajara.
10. Kamta.
11. Setadih.
12. Pahar Singh.
13. Damargari
14. Guridih with its tola Narainpur.
15. Jidu.
16. Rajadera with its tola Chamghati.
17. Rupru with its tolas Sodag and Baruhatu.
18. Jaradih with its tolas Hazaridaur, Mungabera and Barwabera.
19. Nawadih.
20. Chaitanbari.
21. Barwadag.
22. Sawaia.
23. Dumargari.
24. Murgao with its tolas Purutola and Jarkitola
25. Baracoocha with its tola Lapsar.
26. Dokad.
27. Dahua.
28. Lands in village Jonah.

F. A. SLACKE, *Commissioner.*

COMMR.'S OFFICE, RANCHI, *the 15th March 1905.*

NOTIFICATION.

UNDER the provisions of section 2 of Act VI of 1876, as amended by Act V of 1884, Babu Surjya Kumar Some, Manager of the Encumbered Estates of Palamau, is appointed to be the Manager (and the management is vested in him) of the undermentioned immoveable properties of Babu Ram Narain Singh and others, of Dhub Chatterpore, in the district of Palamau, and of any other immoveable property to which they said holders are entitled in their own rights, or which they are entitled to redeem, or which may be acquired by, or devolve on, them or their heirs during the continuance of such management:—

Name of estate.			Name of holder.
Dhub Chatterpore, having shares and interests in the following villages:—			1. Babu Ram Narain Singh.
	As.	P.	2. ,, Ram Prokash Singh.
1. Chatterpore ...	8	4	3. ,, Kishun Dyal Singh.
2. Dhub ...	8	4	4. ,, Ram Lal Singh.
3. Barwaiya ...	2	8	5 ,, Harbans Narain Singh.
4. Rajgooroo ...	2	0	6. ,, Akhjoo Singh.
			7. ,, Ram Dheyan Singh.
			8. ,, Thakur Prosad Singh.
			9. ,, Lakhpaty Singh.
			10. ,, Harakh Nath Singh.
			11. ,, Bisseswar Dyal Singh.
			12. ,, Drip Nath Singh.

F. A. SLACKE, *Commissioner.*

COMMR.'S OFFICE, RANCHI, *the 15th March 1905.*

GENERAL DEPARTMENT.

NOTIFICATIONS.

No. 1965.—The 11th April 1905.—The Lieutenant-Governor has been pleased, under section 17 of the Reformatory Schools Act, 1897 (VIII of 1897), to appoint the Principal of the Civil Engineering College, Sibpur, to be an *ex-officio* member of the Board of Management of the Alipore Reformatory School, *vice* Mr. K. B. W. Thomas, Personal Assistant to the Inspector-General of Police, Lower Provinces, resigned.

24-Parganas.

No. 1964.—The 11th April 1905.—The Lieutenant-Governor has been pleased generally to accept the recommendations made by the Committee appointed to consider the question of commercial education at the Presidency College, Calcutta, and to direct that the following

prospectus, showing the courses of study, the examinations, the rates of fees, and other cognate matters, as now provisionally decided upon, be published for general information:—

Courses of study and delivery of lectures.

(1) Arrangements have been made for instruction and examination in two different courses of study—one to be a complete course every part of which shall be obligatory, and the other to consist of a series of lectures or classes all or any of which may be attended at option. The lectures in the former course shall be delivered during the day, while those in the latter shall be delivered in the evening only.

Day course.

(2) The following shall be the subjects prescribed for the day course:—

(i) English (modern), and especially English correspondence, including commercial correspondence, letter-drafting and *précis*-writing;

(ii) arithmetic, including commercial and mental arithmetic;

(iii) one of the following languages, namely, Bengali, Hindi, Urdu, Uriya, French, German or Latin;

(iv) one of the following subjects, namely, book-keeping, shorthand-writing or type-writing; and

(v) commercial history and geography.

The course shall extend over a period of two years, at the end of which an examination shall be held in the prescribed subjects, in all of which the candidates will be required to pass. No candidate will be allowed to pass unless his answers on every subject are written in a good, legible handwriting.

Evening course.

(3) The following shall be the subjects prescribed for the evening course:—

(i) outlines of political economy;

(ii) banking and currency;

(iii) commercial and industrial law;

(iv) annuities and insurance;

(v) book-keeping;

(vi) shorthand-writing;

(vii) type-writing; and

(viii) English (modern).

In these subjects special examinations shall be held, candidates being allowed to take up each separately and to obtain certificates of having passed in it.

Award of certificates and publication of results.

(4) Certificates shall be awarded by the Education Department to students passing the examinations, and shall require endorsement by the Secretary to the Bengal Chamber of Commerce, and lists of successful candidates, without classification, shall be published by that Chamber and by the Bengal National Chamber of Commerce.

Admission.

(5) There will be no age-limit for candidates for either course. Candidates who have passed the "C class" Examination of High Schools or the Entrance Examination will be eligible for admission to the day course; but others will be admitted only if they satisfy the Education Department, by passing a preliminary test-examination of a similar standard, that they have sufficient general education to enable them to derive advantage from the lectures. Candidates who have not attended the lectures in the day course, will be allowed to compete at the examination only if they have passed the Entrance or the "C class" Examination or satisfied the Education Department, by passing a preliminary test-examination, that they have a reasonable prospect of success. The form of certificate to be issued to students who have passed this examination, as laid down in paragraph (2) above, shall show whether the student has passed the "C class" or Entrance Examination or not and also whether he has duly attended the lectures prescribed for the day course. Those only who have passed the "C class" or Entrance Examination, and after attending the full day course of lectures have passed the prescribed examination, will be considered to be eligible for the full commercial certificate

Candidates who have attended the lectures in the day course, will be eligible for admission to the evening course and allowed to compete at the examinations; but others will be admitted and allowed to compete only if they satisfy the Education Department by passing a preliminary test-examination that they have sufficient general education to enable them to derive advantage from the lectures, or that they have a reasonable prospect of success, as the case may be. The certificates issued on the result of the examination in this course, as laid down in paragraph (3) above, shall show whether the students have attended the lectures prescribed for the day course and have passed such examination and also whether they have attended the evening course of lectures.

Fees.

(6) The fees shall not exceed Rs. 3 *per mensem* payable for the whole school year for the entire day course, and the like sum for each series of fifteen lectures in the evening course on—

(i) banking and currency,

(ii) commercial and industrial law,

(iii) annuities and insurance,

(iv) English (modern).

The fee for each course of thirty-two lectures on the outlines of political economy shall be Rs. 5.

As the evening lectures on book-keeping, shorthand-writing, and type-writing will be on advanced portions of those subjects and will continue over a considerable period, the fee for each course shall be Rs. 10.

(7) The setting of the papers for the examinations will be left to an Examination Board, which shall be constituted for the purpose by the Director of Public Instruction, and upon which the Education Department, the Bengal Chamber of Commerce and the Bengal National Chamber of Commerce shall be represented.

Prizes.

(8) Three gold medals, offered by the Remington Type-writer Company, shall be awarded on the results of the examination on the evening course of lectures on type-writing to the three students awarded the highest marks for efficiency.

Should any other prizes be offered hereafter, the fact will be announced and the terms on which they are offered for competition published in due course.

Opening of classes. (9) The evening course of lectures on political economy began on the 7th March last. The new classes in the day course will be opened next June.

2. The Government of Bengal will be prepared to consider applications for grants-in-aid, which will probably take the form of contributions towards the salaries of the necessary lecturers, to enable other colleges and high schools to introduce schemes of education on the lines laid down in the case of the Presidency College by the prospectus above; but these will be dealt with separately and considered on their merits as they are received.

3. Four scholarships, of Rs. 16, Rs. 12, Rs. 8, and Rs. 8 *per mensem*, tenable for two years, respectively, are, under existing arrangements, available for candidates admitted to the day course who have passed the "C class" Examination; and candidates who have obtained similar scholarships at the Entrance Examination will be permitted to hold them during the day course.

H. W. C. CARNDUFF,
Offg. Secy. to the Govt. of Bengal.

MEDICAL DEPARTMENT.

No. 9T.M.—The 6th April 1905.—Major B. H. Deare, I.M.S., Civil Surgeon, reported his departure from India on leave on the 11th March 1905.

No. 79T.M.—The 8th April 1905.—Captain R. P. Wilson, I.M.S., Officiating Second Surgeon, Presidency General Hospital, is appointed to act as First Surgeon of that institution, during the absence, on deputation, of Captain L. Rogers, I.M.S., or until further orders.

Calcutta.

No. 81T.M.—The 8th April 1905.—Captain J. G. P. Murray, I.M.S., Officiating Civil Surgeon, stationed at Jessore, is appointed to act as Second Surgeon, Presidency General Hospital, during the absence, on leave, of Captain O. A. Lane, I.M.S., or until further orders.

Jessore.
Calcutta.

No. 83T.M.—The 8th April 1905.—Military Assistant Surgeon M. Galvin, Medical Officer, Eastern Bengal State Railway, Sealdah, is appointed temporarily to act as a Civil Surgeon and is posted to Jessore.

Sealdah.
Jessore.

No. 85T.M.—The 8th April 1905.—Military Assistant Surgeon R. Sharples, of the Presidency General Hospital, is appointed to act as Medical Officer, Eastern Bengal State Railway at Sealdah, during the absence, on deputation, of Military Assistant Surgeon M. Galvin, or until further orders.

Calcutta.
Sealdah.

No. 87T.M.—The 8th April 1905.—Military Assistant Surgeon F. K. Holmes, Officiating Assistant Apothecary, Medical College Hospital, is appointed to act as a Military Assistant Surgeon attached to the Presidency General Hospital, during the absence, on deputation, of Military Assistant Surgeon R. Sharples, or until further orders.

Calcutta.

No. 89T.M.—The 8th April 1905.—Captain J. J. Urwin, I.M.S., Officiating Civil Surgeon stationed at Dinajpur, is appointed to act as Resident Surgeon, Medical College Hospital, until further orders.

Dinajpur.
Calcutta.

No. 91T.M.—The 8th April 1905.—Captain E. O. Thurston, I.M.S., Officiating Resident Surgeon, Medical College Hospital, Calcutta, is appointed to act as Civil Surgeon of Chittagong, during the absence, on leave, of Major J. G. Jordan, I.M.S., or until further orders.

Calcutta.
Chittagong.

E. A. GAIT,
Offg. Secy. to the Govt. of Bengal.

JUDICIAL DEPARTMENT.

No. 2816A.

APPOINTMENTS AND TRANSFERS.

No. 2759A.—The 10th April 1905.—Babu Hem Chandra Mitter, Munsif of Banka, in the district of Bhagalpur, is appointed to be a Munsif in the district of Jessore, to be ordinarily stationed at Satkhira, and is vested with the powers of a Judge of a Court of Small Causes for the trial of suits cognizable by such a Court up to the value of Rs. 100, within the local limits of the Satkhira Munsifi.

Bhagalpur.
Jessore.

No. 2761A.—The 10th April 1905.—Babu Debendra Nath Sarkar, Munsif of Satkhira, in the district of Jessore, is appointed to be a Munsif in the district of Cuttack, to be ordinarily stationed at Bhadrak, and is vested with the powers of a Judge of a Court of Small Causes for the trial of suits cognizable by such a Court up to the value of Rs. 50, within the local limits of the Bhadrak Munsifi.

Jessore.
Cuttack.

No. 2763A.—The 10th April 1905.—Babu Behary Lal Chatterjee, Munsif of Bhadrak, in the district of Cuttack, is appointed to be a Munsif in the district of Bhagalpur, to be ordinarily stationed at Banka, and is vested with the powers of a Judge of a Court of Small Causes for the trial of suits cognizable by such a Court up to the value of Rs. 100, within the local limits of the Banka Munsifi.

Cuttack.
Bhagalpur.

No. 2765A.—The 10th April 1905.—Babu Sripati Chatterjee, Munsif of Patiya, in the district of Chittagong, is appointed to be a Munsif in the district of Hooghly, to be ordinarily stationed at Howrah.

Chittagong.
Hooghly.

No. 2767A.—The 10th April 1905.—Babu Chunder Bhoosan Banerjee, Munsif of Howrah, in the district of Hooghly, is appointed to be a Munsif in the district of Chittagong, to be ordinarily stationed at Patiya, and is vested with the powers of a Judge of a Court of Small Causes for the trial of suits cognizable by such a Court up to the value of Rs. 100, within the local limits of the Patiya Munsifi.

Hooghly.
Chittagong.

No. 2769A.—The 10th April 1905.—Babu Kumudini Kant Roy, Additional Munsif of Ulubaria and Serampore, in the district of Hooghly, is appointed to be a Munsif in the district of Mymensingh, to be ordinarily stationed at Kishorganj.

Hooghly.
Mymensingh.

No. 2771A.—The 10th April 1905.—Babu Madan Mohan Saha, Munsif of Kishorganj, in the district of Mymensingh, is appointed to be a Munsif in the district of Hooghly, to be ordinarily stationed at Ulubaria and Serampore, but to be on deputation to Ulubaria.

Mymensingh.
Hooghly.

No. 2773A.—The 10th April 1905.—Babu Bidhu Bhusan Banerji, Munsif of Narayanganj, in the district of Dacca, is appointed to be a Munsif in the district of Rangpur, to be ordinarily stationed at Jalpaiguri, and is vested with the powers of a Judge of a Court of Small Causes for the trial of suits cognizable by such a Court up to the value of Rs. 100, and with the functions of a District Court, under section 26, sub-section (1), of Act VII of 1889, within the local limits of the Jalpaiguri Munsifi. He is also vested with powers under section 19, sub-section (2), of the Bengal, North-Western Provinces and Assam Civil Courts Act, XII of 1887, to try, under the ordinary procedure, original suits up to the value of Rs. 2,000, arising within the local limits of his jurisdiction.

Dacca.
Rangpur.

No. 2775A.—The 10th April 1905.—Babu Latu Behari Bose, Munsif of Hajipur, in the district of Tirhut, is appointed to be a Munsif in the district of Jessore, to be ordinarily stationed at the Sadar station, and is vested with the powers of a Judge of a Court of Small Causes for the trial of suits cognizable by such a Court up to the value of Rs. 100, within the local limits of the Sadar Munsifi of Jessore. He is also vested with powers, under section 19, sub-section (2), of the Bengal, North-Western Provinces and Assam Civil Courts Act, XII of 1887, to try, under the ordinary procedure, original suits up to the value of Rs. 2,000, arising within the local limits of the district of Jessore

Tirhut.
Jessore.

No. 2777A.—The 10th April 1905.—Babu Srish Chandra Mukerji, Munsif of Jessore, is appointed to be a Munsif in the district of the 24-Parganas, to be ordinarily stationed at Diamond Harbour, and is vested with the powers of a Judge of a Court of Small Causes for the trial of suits cognizable by such a Court up to the value of Rs. 100, within the local limits of the Diamond Harbour Munsifi.

Jessore.
24-Parganas.

No. 2779A.—The 10th April 1905.—Babu Khetter Lal Singha, Munsif of Diamond Harbour, in the district of the 24-Parganas, is appointed to be a Munsif in the district of Rajshahi, to be ordinarily stationed at Malda, and is vested with the powers of a Judge of a Court of Small Causes for the trial of suits cognizable by such a Court up to the value of Rs. 100, within the local limits of the Malda Munsifi.

24-Parganas.
Rajshahi.

No. 2781A.—The 10th April 1905.—Babu Poresh Chunder Banerjee, Munsif of Malda in the district of Rajshahi, on leave, is appointed to be a Munsi in the district of Dacca, to be ordinarily stationed at Narayanganj and is vested with the powers of a Judge of a Court of Small Causes for the trial of suits cognizable by such a Court up to the value of Rs. 100, and with the functions of a District Court under section 26, sub-section (1), of Act VII of 1889, within the local limits of the Narayanganj Munsifi. He is also vested with the powers conferred on District Judges under sections 344 to 359 (both inclusive) of the Code of Civil Procedure in cases where the amount of debts owing by the insolvents does not exceed Rs. 1,000, arising within the local limits of the Narayanganj Munsifi.

Rajshahi.
Dacca.

No. 2783A.—The 10th April 1905.—Babu Satish Chandra Basu, Munsif of Jangipur in the district of Murshidabad, is appointed to be a Munsif in the district of Tirhut, to be ordinarily stationed at Hajipur, and is vested with the powers of a Judge of a Court of Small Causes for the trial of suits cognizable by such a Court up to the value of Rs. 100, within the local limits of the Hajipur Munsifi.

Murshidabad.
Tirhut.

No. 2785A.—The 10th April 1905.—Babu Gopal Chandra Basu, M.A., B.L., is appointed to act, until further orders, as a Munsif in the district of Murshidabad, to be ordinarily stationed at Jangipur.

Murshidabad.

No. 2789A.—The 10th April 1905.—Mr. Mahomed Wahiduddin Ahmad, Munsif of Buxar, in the district of Shahabad, on leave, is appointed to be a Munsif in the district of Bhagalpur, to be ordinarily stationed at Jamui, and is vested with the powers of a Judge of a Court of Small Causes for the trial of suits cognizable by such a Court up to the value of Rs. 100, and with the functions of a District Court under section 26, sub-section (1), of Act VII of 1889, within the local limits of the Jamui Munsifi.

Shahabad.
Bhagalpur.

No. 2791A.—The 10th April 1905.—Mr. Syed Hasan, Barrister-at-Law, is appointed to act as a Munsif in the district of Bhagalpur, to be ordinarily stationed at Jamui, during the absence, on leave, of Mr. Mahomed Wahiduddin Ahmad, or until further orders.

Bhagalpur.

No. 2793A.—The 10th April 1905.—Babu Mohini Mohun Dutt, Munsif of Sasaram, in the district of Shahabad, is appointed to be a Munsif in the same district, to be ordinarily stationed at Buxar, and is vested with the powers of a Judge of a Court of Small Causes for the trial of suits cognizable by such a Court up to the value of Rs. 100, within the local limits of the Buxar Munsifi.

Shahabad.

No. 2795A.—The 10th April 1905.—Babu Benode Behari Mitter, Munsif of Jamui, in the district of Bhagalpur, is appointed to be a Munsif in the district of Dacca, to be ordinarily stationed at Narayanganj, and is vested with the powers of a Judge of a Court of Small Causes for the trial of suits cognizable by such a Court up to the value of Rs. 100, within the local limits of the Narayanganj Munsifi.

Bhagalpur.
Dacca.

No. 2797A.—The 10th April 1905.—Babu Gagan Behary Chaudhry, Munsif of Narayanganj, in the district of Dacca, on leave, is appointed to be a Munsif in the district of Hooghly, to be ordinarily stationed at Ulubaria, and is vested with the powers of a Judge of a Court of Small Causes for the trial of suits cognizable by such a Court up to the value of Rs 100,

Dacca.
Hooghly.

within the local limits of the Ulubaria Munsifi. He is also vested with powers to exercise final jurisdiction in the trial of suits for the recovery of rent under section 153 (*b*) of the Bengal Tenancy Act, VIII of 1885.

No. 2799A.—The 10th April 1905.—Babu Bhagobutty Charan Kundu, Munsif of Ulubaria, in the district of Hooghly, is appointed to be a Munsif in the district of Shahabad, to be ordinarily stationed at Sasaram, and is vested with the powers of a Judge of a Court of Small Causes for the trial of suits cognizable by such a Court up to the value of Rs. 100, within the local limits of the Sasaram Munsifi.

Hooghly. Shahabad.

No. 2801A.—The 10th April 1905.—Babu Hari Prasanna Mookerjee, Munsif of Bangaon, in the district of Jessore, is appointed to be a Munsif in Chota Nagpur, to be ordinarily stationed at Purulia, and is vested with the powers of a Judge of a Court of Small Causes for the trial of suits cognizable by such a Court up to the value of Rs. 100, within the local limits of the Purulia Munsifi.

Jessore. Chota Nagpur.

No. 2803A.—The 10th April 1905.—Babu Amulya Chandra Ghose, Munsif of Purulia, in Chota Nagpur, is appointed to be a Munsif in the district of Jessore, to be ordinarily stationed at Bangaon, and is vested with the powers of a Judge of a Court of Small Causes for the trial of suits cognizable by such a Court up to the value of Rs. 100, and with the functions of a District Court, under section 26, sub-section (1), of Act VII of 1889, within the local limits of the Bangaon Munsifi.

Chota Nagpur. Jessore.

No. 2805A.—The 10th April 1905.—Babu Bhubaneswar Banerjee, Munsif of Munshiganj, in the district of Dacca, is appointed to be a Munsif in the district of Rangpur, to be ordinarily stationed at Kurigaon.

Dacca. Rangpur.

No. 2807A.—The 10th April 1905.—Babu Jotindra Chandra Bose, Munsif of Kurigaon, in the district of Rangpur, is appointed to be a Munsif in the district of Dacca, to be ordinarily stationed at Munshiganj.

Rangpur. Dacca.

No. 24A.D.—The 10th April 1905.—Babu Nisi Kanta Guha, M.A., B.L., is appointed to act as a Munsif in the district of Faridpur, to be ordinarily stationed at Chikandi, during the absence, on leave, of Babu Nalini Mohan Bandopadhya, or until further orders.

Faridpur.

No. 26A.D.—The 10th April 1905.—Babu Kunja Behari Bullav, M.A., B.L., is appointed to act as a Munsif in the district of Rangpur, to be ordinarily stationed at Jalpaiguri, during the absence, on leave, of Babu Charu Chandra Mitter, or until further orders.

Rangpur.

No. 51A.D.—The 11th April 1905.—Babu Kamini Kumar Dutt, M.A., B.L., is appointed to act as a Munsif in the district of Hooghly, to be ordinarily stationed at Serampore, during the absence, on leave, of Babu Ananda Kisor Dutta Ray, or until further orders.

Hooghly.

LEAVE.

No. 2808A.—The 3rd April 1905.—Babu Gagan Bihary Chowdhry, Munsif of Narayanganj, in the district of Dacca, is allowed leave for twelve days, under article 271 of the Civil Service Regulations, in extension of the leave granted to him under the order of the 4th March 1905.

Dacca.

No. 2809A.—The 4th April 1905.—Babu Charu Chandra Mitter, Munsif of Jalpaiguri, in the district of Rangpur, is allowed leave for eighteen days, viz, eight days under article 274 of the Civil Service Regulations, and the remaining period under article 271 of the same Regulations, with effect from the date on which he may be relieved.

Rangpur.

No. 2810A.—The 5th April 1905.—Babu Kunja Behari Biswas, Munsif of Bangaon, in the district of Jessore, is allowed leave for one month, under article 271 of the Civil Service Regulations, in extension of the leave granted to him under the order of the 28th February 1905.

Jessore.

The 5th April 1905.—Babu Ananda Kisor Dutta Ray, Munsif of Serampore, in the district of Hooghly, is allowed leave for one month, under article 271 of the Civil Service Regulations, with effect from the date on which he may be relieved.

Hooghly.

The 5th April 1905.—Babu Nalini Mohan Bandopadhya, Munsif of Chikandi, in the district of Faridpur, is allowed leave for thirty-three days, under article 272 of the Civil Service Regulations, with effect from the 7th April 1905, or from the date on which he may be relieved.

Faridpur.

No. 2811A.—The 7th April 1905.—Babu Bunwari Lal Banerji (No. I), Munsif of Pabna, in the district of Pabna and Bogra, is allowed leave for ten days, under article 337 of the Civil Service Regulations, with effect from the 10th November 1904.

Pabna and Bogra.

The 7th April 1905.—Babu Upendra Nath Datta, Munsif of Kendrapara, in the district of Cuttack, is allowed leave for one month, under article 271 of the Civil Service Regulations, with effect from the date on which he was relieved.

Cuttack.

No. 28A.D.—The 10th April 1905.—Babu Pran Krishna Biswas, Subordinate Judge, Faridpur, is allowed leave for one month, viz, five days under article 274 of the Civil Service Regulations, and the remaining period under article 271 of the Regulations, with effect from the 15th April 1905, or from the date on which he may be relieved.

Faridpur.

POWERS.

No. 2660A.—The 6th April 1905.—Under the authority vested in him by section 357 sub-section (2), of the Code of Criminal Procedure, Act V of 1898 the Lieutenant-Governor empowers Babu Sures Chandra Bose substantive *pro tempore* Deputy Magistrate, Rajshahi, to take down evidence in criminal cases in the English language.

Rajshahi.

No 2766A.—The 7th April 1905.—Mr. J. A. L. Swan, Assistant Magistrate, 24-Parganas, is vested, under section 407 (2) of the Code of Criminal Procedure, with power to hear appeals from convictions by Magistrates of the second and third classes.

24-Parganas.

No. 2787A.—The 10th April 1905.—Babu Nagendra Nath Ghose, Munsif of Jangipur, in the district of Murshidabad, is vested with powers to exercise final jurisdiction in the trial of suits for the recovery of rent under section 153 (*b*) of the Bengal Tenancy Act, VIII of 1885.

Murshidabad.

No. 16A.D.—The 10th April 1905.—Babu Hemendra Lal Singh, Munsif of Magura, in the district of Jessore, is vested with the powers of a Judge of a Court of Small Causes for the trial of suits cognizable by such a Court up to the value of Rs. 50, and with the functions of a District Court, under section 26, sub-section (1), of Act VII of 1889, within the local limits of the Magura Munsifi.

Jessore.

No. 18A.D.—The 10th April 1905.—Under the authority vested in him by section 357, sub-section (2), of the Code of Criminal Procedure, Act V of 1898, the Lieutenant-Governor empowers Babu Lalit Chandra Guha, substantive *pro tempore* Deputy Magistrate, Dinajpur, to take down evidence in criminal cases in the English language.

Dinajpur.

No. 20A.D.—The 10th April 1905.—In exercise of the power conferred by sub-section (1) of section 565 of the Code of Criminal Procedure, 1898, the Lieutenant-Governor is pleased to empower Babu Prakas Chandra Sinha, a Magistrate of the first class, in the district of Purnea, to order, at the time of passing sentence of imprisonment on any person referred to in that sub-section, that the residence or change of residence of such person after release shall be notified as provided by the rules made under sub-section (3) of the section.

Purnea.

No. 22A.D.—The 10th April 1905.—Mr. Naw Ratten Misra, substantive *pro tempore* Deputy Magistrate, Sonthal Parganas, is vested with the powers of a Magistrate of the second class.

Sonthal Parganas.

No. 32A.D.—The 10th April 1905.—Under the authority vested in him by section 357, sub-section (2), of the Code of Criminal Procedure, Act V of 1898, the Lieutenant-Governor empowers Babu Tej Chundra Mukerji, Subordinate Judge and Assistant Sessions Judge, Bhagalpur, and *ex-officio* Subordinate Judge and Assistant Sessions Judge, Monghyr, to take down evidence in criminal cases in the English language.

Bhagalpur and Monghyr.

No. 42A.D.—The 11th April 1905.—Babu Jaya Prosad Pande, Munsif of Patna, is vested with the powers of a Judge of a Court of Small Causes for the trial of suits cognizable by such a Court up to the value of Rs. 100, within the local limits of the thanas comprised in the Sadar Munsifi of Patna, exclusive of the area over which the Cantonment Magistrate as Small Cause Court Judge of Dinapore has jurisdiction.

Patna.

No. 49A.D.—The 11th April 1905.—Babu Purna Chunder Nag, Deputy Magistrate, who has, under the order of this date, been posted to the head-quarters station of the Cuttack district, is vested with the powers of a Magistrate of the second class.

Cuttack.

R. W. CARLYLE,
Offg. Chief Secy. to the Govt. of Bengal.

APPOINTMENTS AND TRANSFERS.

No. 46J.D.—The 10th April 1905.—Babu Pramatha Nath Bagchi is re-appointed to be an Honorary Magistrate of the Independent Bench at Meherpur, in the district of Nadia.

Nadia.

RESIGNATIONS.

No. 3076J.—The 5th April 1905.—The Lieutenant-Governor accepts the resignation tendered by Babu Annada Charan Bose of his appointment as an Honorary Magistrate of the Taki Municipal Bench, in the district of the 24-Parganas.

24-Parganas.

POWERS.

No. 16J.D.—The 10th April 1905.—Babu Ram Hridoy Sil, an Honorary Magistrate of the Kalna Independent Bench, in the district Burdwan, is vested with the powers of a Magistrate of the second class, and is authorised to sit singly for the trial of such cases as may be made over to him by the Subdivisional Officer of Kalna.

Under section 357, sub-section 2 of the Code of Criminal Procedure, Act V of 1898, Babu Ram Hridoy Sil is also empowered to take down evidence in criminal cases in the English language.

Burdwan.

No. 47J.D.—The 10th April 1905.—Babu Pramatha Nath Bagchi, who has been re-appointed to be an Honorary Magistrate of the Independent Bench at Meherpur, in the district of Nadia, is vested with the powers of a Magistrate of the third class.

Nadia.

H. W. C. CARNDUFF,
Offg. Secy. to the Govt. of Bengal.

NOTIFICATION.

No. 3112J.—The 6th April 1905.—It is hereby notified for general information that the Nawabgunge police-station, in the Barasat subdivision of the district of the 24-Parganas, has been moved from Nawabgunge to Noapara, with effect from the 1st April 1905, and that the thana will henceforth be known as the Noapara thana.

24-Parganas.

H. W. C. CARNDUFF,
Offg. Secy. to the Govt. of Bengal.

NOTIFICATION.

No. 10J.D.—The 10th April 1905.—Under section 4 (*l*), clause (*s*) of the Code of Criminal Procedure, Act V of 1898, the Lieutenant-Governor declares the undermentioned police out-posts in the district of Nadia to be police-stations for the local areas specified :—

NAMES.	Boundaries.	Names of villages included in jurisdiction.
Nadia in police-station Krishnagar.	The outpost is bounded on the north by the villages of Churbahila, Belpukhar and Sonadanga in the jurisdiction of Krishnagar police-station ; on the east by the villages of Sambhunagar, Amghata, Gangubash, Kundpara and Bhaluka in the jurisdiction of the Krishnagar police-station ; on the south by the villages of Hat-Bhagai Fira Kanchantola Kuti, Heniatpur and Bankar in the jurisdiction of police-station Purbusthali, Burdwan district, and Satkulia and Sheipur in the jurisdiction of Krishnagar police-station and on the west by the villages of Kankshail, Jaykhali, Jahargunja, Bhathardunga, Bathermahatpur, Paranganja, Nayapur, Nutanpara, Sumudragora and Julatdanga, in the jurisdiction of police-station Purbusthali, Burdwan district.	(1) Navadwip Town, (2) Ram Chandrapur, (3) Gopalpur (4) Mahispore, (5) Godkhali, (6) Majherchar, (7) Kalinagar, (8) Bablari, (9) Nutangram, (10) Edrakpur, (11) Ganjadanga, (12) Katalipota, (13) Ballaldighi, (14) Mollarmath, (15) Srinathpur, (16) Myapur, (17) Bhasmidanga, (18) Nidoya or Rudrapur, (19) Bamonpukur, (20) Tota, (21) Rajapur, (22) Ghashighata, (23) Sardanga, (24) Gomaghar, (25) Mollapara, (26) Sarupganja, (27) Mahesganja, (28) Teorkhali, (29) Tengra, (30) Kashibash, (31) Majdia, (32) Brohmanagar, (33) Mukundopur, (34) Baishanagar, (35) Bamanpara, (36) Simulgachi, (37) Pansila, (38) Anandabash, (39) Sardanga, (40) Santoshpur, (41) Banagram, (42) Chatirmath, (43) Jangulbash, (44) Balirchar, (45) Nutangram, (46) Gholapara, (47) Fakirdanga.	
Khoksa in police-station Kumarkali.	The outpost is bounded on the north by the villages of Mulgram, Sadki, Molkhola, Kardaheda, Muralipur, Amlabari, Joyantipara in the jurisdiction of Komarkhali police-station ; on the east by Ramkantapur in the jurisdiction of Kumarkhali police-station, district Nadia, Lakhandi, Gural, Singor Chorpara, Gopalpur, Naona Muratpur, Hossendanga, Kustia, Balnabhanga and Kalimoher in the jurisdiction of Pangsa police-station, district Faridpur ; on the south by the Canal of Sirajpur and Gorai river; and on the west by the Gorai river, Boral, Krishnagar, in the jurisdiction of Saikopa police-station, district Jessore, Chasha, Muljram, Bilkete and Emtpur, in the jurisdiction of Kumarkhali police-station.	(1) Khoksa, (2) Chorpara, (3) Chainapara, (4) Dadrajpur, (5) Patudanga, (6) Muragacha, (7) Ratanpur, (8) Rajanathpur, (9) Helalpur, (10) Hachimpur, (11) Ektarpur, (12) Kamlapur, (13) Kasimpur, (14) Fatikamlapur, (15) Kamardanga, (16) Gorakhghat, (17) Janipur, (18) Bahorampur, (19) Shirajpur, (20) Kadirpur, (21) Kurupara, (22) Chak Haripur, (23) Kuripara Chak, (24) Nishindabaria, (25) Bilchaduri, (26) Baruichara, (27) Bajrak Mirjapur, (28) Behora No 1, (29) Madlia, (30) Mirjapur, (31) Rajarampur, (32) Raghunathpur, (33) Shaikhpara (Kadirpur), (34) Shameshpur, (35) Santoshpur, (36) Salpoke, (37) Kalisankarpur, (38) Jhalukadaha, (39) Dhugundu, (40) Narsingpur, (41) Padmapur, (42) Patalduer, (43) Padamjani, (44) Beeljani, 45) Naksapora, (46) Shimulia, (47) Katpora, (48) Dharajipara, (49) Shingberia, (50) Shyampur, (51) Shimulia Chorpara, (52) Eswordo, (53) Kalat, (54) Islampur, (55) Khagorbaria, (56) Chaitandanga, (57) Nislat, (58) Narainpur, (59) Paikpara, (60) Brojamuli, (61) Rasaya, (62) Madlia II, (63) Manigram, (64) Raghunathpur II, (65) Manikkot, (66) Kazipara, (67) Raghunathpur III, (68) Jote Mallikat, (69) Mallikpuratanpara, (70) Mallikot Barapara, (71) Shealdanga, (72) Kasba Majail, (73) Gangdhor, (74) Dimnamari, (75) Digalhat, (76) Dattapara, (77) Natabhanga, (78) Naduria, (79) Parkulia, (80) Panchberia, (81) Banglapara, (82) Banglat, (83) Bhatsala, (84) Maliat, (85) Keongram, (86) Jainapara, (87) Gabdipara, (88) Chobehara, (89) Chandut, (90) Bara Lakhipur, (91) Bara Naduria, (92) Banogram, (93) Bara Ghobi, (94) Bhandir Dube, (95) Mechuaghata, (96) Muksidpur, (97) Bamanpara, (98) Lakshipur, (99) Lohabon, (100) Salaim, (101) Santikhola, (102) Hadukhola, (103) Ajail, (104) Ganeshpur, (105) Jugulha, (106) Pathoraduba, (107) Jotepara, (108) Dukahania, (109) Betboria, (110) Behora II, (111) Nagarpara, (112) Bhabanipur, (113) Ramanathpur, (114) Shyampur, (115) Hamdupara, (116) Osmanpur, (117) Kumbhog, (118) Khampur, (119) Debinagar, (120) Kaipur, (121) Sripur, (122) Hijlabat.	

Names.	Boundaries	Names of villages included in jurisdiction.
mukdia Ghat in police-station Nayapara.	The outpost is bounded on the north by the Padma river; on the west by the Padma river; on the south by villages Khoral Bahadurpur and Chakdhubai in the jurisdiction of Noapara police-station, and Mirpur, Huludberi, Joybhaga and Jajpur in the jurisdiction of Daulatpur police-station, and on the west by villages Gucherdiar, Sonaikundarkati, Charbhabanandadiar, Murichardiar, Katlamari, Dhekipara, Bhukubonapara in the jurisdiction of Daulatpur police-station.	(1) Azkandi, (2) Akutipara, (3) Kangalipara, (4) Kajihata Tiktikipara, (5) Kodaliapara, (6) Gachia Daulatpur, (7) Gobindapur, (8) Golapnagar (Bhaduriapara), (9) Golapnagar (char), (10) Chandgram, (11) Chandipur, (12) Jagshar, (13) Juniadaha, (14) Thakur Daulatpur, (15) Damukdia, (16) Dabai, (17) Dharampur, (18) Nooda Khemirdiar, (19) Nalua, (20) Nataganga, (21) Porankhali, (22) Peluakandi, (23) Forakpur, (24) Fakirabad (Naodupara), (25) Faljullapur, (26) Basadebpur, (27) Bamanpara, (28) Bahadarpur, (29) Bittipara, (30) Baradi, (31) Bheramora, (32) Bhabanipur, (33) Mahishadera, (34) Mrijapur, (35) Madhabpur (Gosam) pur), (36) Ramkrishnapur, (37) Ramchandrapur, (38) Raita, (39) Satberia, (40) Haripur, (41) Hirendah, (42) Rajia Paschim, (43) Saruperghopi, (44) Khenierdiar, (45) Maheshpur, (46) Gopinathpur, (47) Saludug Baharchar, (48) Barashabigha Baharchar.
anskhali Independent outpost in police-station Krishnagar.	The outpost is bounded on the east by village Shampur in the jurisdiction of Mahespur police-station in district Jessore; on the south by village Hazrapur in the jurisdiction of Ranaghat police-station; on the west by village Tegharia in the jurisdiction of Krishnagar police-station; and on the north by village Bhushkar in the jurisdiction of Chapra Independent outpost, Krishnagar, within Krishnagar police-station.	(1) Ashannagar, (2) Itaberia, (3) Kalipora, (4) Gobindapur, (5) Chanderpali, (6) Chandannagor, (7) Chetra Dali, (8) Joypur, (9) Jhinukghata, (10) Dhakuria, (11) Dafor Pata, (12) Dakshinpura, (13) Nidhirpata, (14) Nischindipur, (15) Pathuriaghata, (16) Fulboria, (17) Betla, (18) Belani Nutangram, (19) Bablaberia, (20) Brahamandanga, (21) Bhairabchandrapur, (22) Roypur, (23) Naikora, (24) Bir Hanskhali, (25) Por Hanskhali, (26) Kantooknagar, (27) Kaikhali, (28) Kayasani, (29) Khamar Simla, (30) Goyesh, (31) Gorua Pola, (32) Daherbinchas (33) Dalingram, (34) Dosatina, (35) Nao Pakhoria, (36) Poradanga, (37) Panditpur, (38) Patkabari, (39) Pandua, (40) Patuli, (41) Patna, (42) Bogla, (43) Badkulla, (44) Bhabanipur, (45) Bhagna, (46) Madna, (47) Mandulghat, (48) Bara Muragacha, (49) Chota Muragacha, (50) Mamjoyan, (51) Shahapur, (52) Hatibanda, (53) Hatisala, (54) Haludpara, (55) Harindanga, (56) Huda Harindanga, (57) Hematpur, (58) Ulashi, (59) Kumari, (60) Goala Kamalpur, (61) Kapasiapota, (62) Umarpur, (63) Nooda Kamalpur, (64) Gazna, (65) Gorupotha, (66) Ghugragachi, (67) Kumari, (68) Bara Chuporia, (69) Chota Chuporia, (70) Chhutipur, (71) Pepulberia, (72) Pakhiara, (73) Fatehpur, (74) Rakhalgachi, (75) Bajithpur, (76) Bairampur, (77) Boyardanga, (78) Maheshnagar, (79) Maurhat, (80) Mubarakpur, (81) Malsadaha, (82) Ramnagar, (83) Shyamnagar, (84) Shilbaria, (85) Sonatanpur, (86) Musidpur, (87) Dhakuria, (88) Bablabona, (89) Hudachapra, (90) Shibchandrapur, (91) Malsadaha, (92) Media, (93) Mobarakpur, (94) Bairampur.
hapra independent outpost in police-station Krishnagar.	The outpost is bounded on the south by the villages of Bansberia and Bhandorkhola in the jurisdiction of Krishnagor police-station and Ashannagar in Hanskhali out post; on the north by Hriduipur, Sonapur, Baidyanathtola, Puti Mori, Malipontha, Patharghata, and Anandubash in the jurisdiction of Meherpur police-station; on the north-east by village Chakelia in the jurisdiction of Damurhuda police-station; on the west by Mota, Teghari, Mechpontha, Padhanagar, Shibpur, and Patnabhanga in the jurisdiction of Nakasipara police-station, and on the east by Sakdaha and Bhagawanpur in the jurisdiction of	(1) Bara Andulia, (2) Alpa, (3) Arangsuriaa, (4) Adapota (5) Andubpota, (6) Amjhupi, (7) Natan Andulia, (8) Chota Andulia, (9) Betberia, (10) Bania khasi, (11) Brittilodu, (12) Bhimpur, (13) Bagberia, (14) Bhatsala, (15) Balirgachi, (16) Barabali danga, (17) Chota Balidanga, (18) Bhatgachi, (19) Brohmanagar, (20) Bagudunga, (21) Banguljhi, (22) Bad Elangi, (23) Baru Charutola, (24) Bara Chandpur, (25) Charuitipir, (26) Chota Charukola, (27) Chapra, (28) Chota Chandpur, (29) Dungua, (30) Duspora, (31) Digree, (32) Dudkalee, (33) Domepukur, (34) Deolia, (35) Durgapur, (36) Dumoria, (37) Daiorbazar, (38) Dukria, (39) Elangi, (40) Falkalnie, (41) Fulbari, (42) Gokhorapota, (43) Gobindupur, (44) Gatra, (45) Gacha, (46) Gouldanga, (47) Gangra, (48) Hatlakshipur, (49) Hatchapra, (50) Hatsala, (51) Hriduipur, (52) Hantra, 53) Huda, (54) Hadupara, (55 Huda Rengerpota, (56) Hatkhola, (57) Etabaree, (58) Ichhapur, (59) Jugindha, (60) Jhidha, (61) Jamiriudanga,

NAMES.	Boundaries.	Names of villages included in jurisdiction.
Chapra independent outpost—*concld.*	Kishnaganj police station.	(62) Kultola, (63) Barsana, (64) Kukradaha, (65) Karuigachi, (66) Kalenga, (67) Kroregachi, (68) Katgora, (69) Khamarpara, (70) Kakerhuda, (71) Kuliadaha, (72) Lakshipur, (73) Lakshigacha (74) Boramuragacha, (75) Chotamuragacha, (76) Mathurapur, (77) Maidanpur, (78) Mrigipontha, (79) Modia, (80) Malamgacha, (81) Majdia, (82) Maheshnagar, (83) Mahakhola, (84) Mahatpur, (85) Malipotha, (86) Madhabpur, (87) Mahorajpur, (88) Maheshpur, (89) Madhupur, (90) Nelua, (91) Naralipur, (92) Naluapara, (93) Nutan Petambarpur, (94) Puratan Petambarpur, (95) Pakurgachi, (96) Palianpara, (97) Pathuria, (98) Pukharia, (99) Patlia, (100) Panchpotha, (101) Pipatgachi, (102) Padmamela, (103) Rengerpotha, (104) Ranabendu, (105) Rajibpur, (106) Madhughata, (107) Monipukhur, (108) Gutia, (109) Simulia, (110) Sikaria, (111) Tengra, (112) Talukhuda, (113) Tilakpur, (114) Sibchandrapur, (115) Parupara.
Haringhata in police-station Chakdah.	The outpost is bounded on the south by the villages of Srikrishnapur, Keolksha, Nurpur, Vandergacha, Chapra Putsy and Kajha, in the jurisdiction of Habra police-station, district 24-Parganas, and villages Amankenda, Nanpura, Harupatha, Muraldanga and Haripara in the jurisdiction of Gaighata police-station, district Jessore; on the east by Choberia, Gopinathpur, Majpara, Kanakpur and Satakbi in the jurisdiction of Banjhoar police-station, district Jessore, and Lakshmipur Deoni, Saruppur, Kandulia and Rusullapur in the jurisdiction of Chakdaha police-station; on the north by the villages of Kadamgachi, Gorapota, Mrijapur, Gotra, Petugachi, Nikhorgachi, Mollapara, Moheswarpur and Attafurpara, in the jurisdiction of Chakdah police-station; and on the west by villages Behdanga and Kotaberia in the jurisdiction of Chakdah police-station, district Nadia, Dogachia and Palisy in the jurisdiction of the Naihati police-station, district 24-Parganas, and villages Maruha, Madunpur, Rajberi, Amrigacha and Nandur, in the jurisdiction of Amdanga outpost, district 24-Parganas.	(1) Arbibaria, (2) Aishpur, (3) Kajipara, (4) Katbhanga, (5) Kapibasow, (6) Karimbelia, (7) Karanchabelia, (8) Kherdamanpur, (9) Khamariapara, (10) Khalsi, (11) Khasnagar, (12) Ganguria, (13) Gatra, (14) Garagopalia, (15) Gohaldage, (16) Gorali, (17) Chakrabarti Satberia, (18) Chandi, (19) Chandu, (20) Jaguli, (21) Juhirapara, (22) Jhikra, (23) Domepara, (24) Dhandhorna, (25) Teouri Barasat, (26) Jhansura, (27) Dikhapara, (28) Dikhalgram, (29) Duttapara I, (30) Duttapara II, (31) Debipur, (32) Darjipara, (33) Darabpur, (34) Duspoleduga, (35) Dasdia, (36) Dhopagachi, (37) Dhopa Barasat, (38) Dhorali, (39) Sikari Mahal, (40) Nager Ukhra, (41) Napti Satberia, (42) Nalkura, (43) Panch Rahamia, (44) Panchpotha, (45) Panchi Pukharia, (46) Panpur, (47) Par Majhdia, (48) Parulia, (49) Fatehpur, (50) Baish Pukharia, (51) Baksha, (52) Bagrajapur, (53) Baikra, (54) Barui, (55) Bijra, (56) Bamanpara, (57) Bamanberia (58) Birohi, (59) Barampur, (60) Balindi, (61) Baliadanga, (62) Basantapur, (63) Biswanathpur, (64) Bamshbona, (65) Bahilapole, (66) Baheroepur, (67) Behoria, (68) Brohmapur, (69) Bahirsona khali, (70) Bhogorpara, (71) Bhepur, (72) Bhanderkhola, (73) Bhatsala, (74) Bhabanipur, (75) Makhalgachi, (76) Metpara, (77) Mitterpur, (78) Madhindia, (79) Madhpur, (80) Mridhapara, (81) Manpur, (82) Moberakpur, (83) Murhagacha, (84) Mollabelia, (85) Malidanga, (86) Malpara, (87) Mahajanpara, (88) Mahadebpur, (89) Raghunathpur, (90) Rajapur, (91) Rajberia, (92) Raikash, (93) Lanpara, (94) Shaikhpera, (95) Shingha, (96) Satberia, (97) Satpala, (98) Satyapola, (99) Santoshpur, (100) Sonakhali, (101) Sonakur, (102) Subarnapur, (103) Subidpur, (104) Shimolpukhuria, (105) Shimhat, (106) Shirajnaopara, (107) Saheaghata, (108) Hajrapatha, (109) Hazraberia, (110) Halkandu, (111) Hapania, (112) Haripukhoria, (113) Haringhata, (114) Haldarpara.

H. W. C. CARNDUFF,
Offg. Secy. to the Govt. of Bengal.

PUBLIC WORKS DEPARTMENT.

ESTABLISHMENT.

The 8th April 1905.

No. 88.—Mr C. A. White, Officiating Sanitary Engineer, is appointed to officiate as Superintending Engineer of the Central Circle, in addition to his own duties, *vice* Mr. W. B. Gwyther, Superintending Engineer, on deputation.

M. J. SCORER,
Offg. Secy. to the Govt. of Bengal.

MARINE DEPARTMENT.

The 7th April 1905.

No. 46 Marine.—Under the powers conferred upon him by section 36 of the Indian Steam-ships Act, 1884, and in supersession of the rules sanctioned under notification No. 122 Marine, dated the 4th September 1902, the Lieutenant-Governor is pleased, with the previous sanction of the Governor-General in Council, to make the following rules to regulate the granting of certificates of competency to Engineers of sea-going steam-ships.

W. A. INGLIS,
Secy. to the Govt. of Bengal.

General Rules.

Certificates of competency granted to persons who pass requisite examinations.

1. Certificates of competency will be granted to those persons who pass the requisite examinations and otherwise comply with the requisite conditions. For this purpose Examiners have been appointed and arrangements have been made for holding the examinations periodically at the Port of Calcutta. The examinations will be held whenever necessary or at such other times as the Government may appoint.

Application how to be made.

2. The application for examination is to be made on Form Exn. 3, which must be filled up at the Port Office. The Form, Exn. 3, properly filled in, together with the candidate's Indentures of Apprenticeship, testimonials, and discharges, must be lodged with the Port Officer not later than the day before the day of examination. As such testimonials may have to be verified before the candidate can be examined, it is desirable that they should be handed in together with the Form Exn. 3, as early as possible.

The Port Officer should be particularly careful to ascertain that there are no gaps in the candidate's service which are not properly accounted for before he is allowed up for examination.

How to apply in special cases.

3. In cases where the services of a candidate require verification, or where he is in doubt whether his service complies with the regulations, and wishes to submit his case for special consideration, all certificates, discharges and testimonials, together with the form of application* properly filled in, should be submitted to the Port Officer, who will either deal with the case or transmit it to the Government for decision.

Inquiries.

4. All other enquiry regarding examinations should be made and dealt with in the same way. The point on which information is sought should be clearly stated and certificates, discharges, testimonials, etc., should be forwarded when they are material to the enquiry.

Testimonials, where service.

5. All candidates will be required to produce, in addition to the official discharge certificates, testimonials as to their workshop service and as to their service at sea. The testimonials as to workshop service must be signed by the employer and must testify to the candidate's conduct and ability, and state what kind of work he was engaged on (*e.g.*, fitting, erecting, etc.), and for how long.

Testimonials, sea service.

6. Testimonials as to service at sea must testify to the applicant's sobriety, experience, ability, and general good conduct for at least the last twelve months' service at sea preceding the date of application to be examined. They

* Form Exn. 3 which can be obtained at the Port Office.

must be signed by the Master and Chief Engineer (or, in the case of testimonials to Chief Engineers, by the Master and Superintending Engineer), and must clearly state whether the applicant was on regular watch, and in regular charge of a watch on the main engines or boilers. It is desirable that testimonials of candidates should be endorsed by the Superintending Engineer. No time spent in clerical work will be allowed to count.

Further as to testimonials.

7. In cases where a testimonial from the Chief Engineer, or from the Master, is for any sufficient reason not obtainable, one may be submitted from the Superintending Engineer in place of that of the Chief Engineer, and one from the Managing Owner or Secretary or Chairman of a large Company in place of that of the Master, but in every such instance the testimonial must declare that the facts stated are in accordance with the reports made by the Chief Engineer or the Master, as the case may be, or else that the facts are within the writer's personal knowledge.

Physical defects.

8. When a candidate is observed to be hard of hearing, or is labouring under any other obvious physical defect, the signatories of his testimonials are required to mention that defect specifically, and to state whether it in any way interfered with the efficiency of the candidate as an engineer on watch. When these modified testimonials are such as to completely satisfy the examiner that the defect is not such as to interfere with the efficient discharge of the applicant's duties as engineer, the examination is proceeded with; otherwise the case is referred to the Government. Candidates afflicted with nervous impediment in speech may write their answers to *viva-voce* questions.

Testimonials of Foreigners.

9. The testimonials of service of Foreign Engineers and of British Engineers serving in foreign vessels, which cannot be verified by the Port Officer, must be confirmed either by the Consul of the country to which the ship in which the candidate served belonged, or by some other recognized official authority of that country; or by the testimony of some credible person on the spot having personal knowledge of the facts required to be established. The production, however, of such proofs will not of necessity be deemed sufficient. Each case must be decided on its own merits; and if the sufficiency of the proofs given appears to be at all doubtful, the point must be referred to the Government.

Certificate as to age.

10. Should any doubt exist as to the age of a candidate he will be required to produce a Certificate of Birth or Baptism.

Foreigners to know English.

11. Foreigners must prove to the satisfaction of the Examiners that they can speak and write the English language sufficiently well to perform the duties required of them on board a British vessel.

Verification of service, &c., by articles.

12. Service which cannot be verified by proper entries in the Articles of the Ships in which the candidates have served cannot be counted.

Issue of certificate.

13. If the candidate passes he will receive a form (Form Exn. 16) authorizing the Port Officer to whom it is addressed to issue the Certificate. The candidate's testimonials and other papers will be returned to him when the examination is finished. It is therefore important that the port at which the Certificate is to be issued should be the same on both the Form Exn. 16 and the form of application Exn. 3. If circumstances should make any alteration necessary, the Examiner should see that it is made in both forms; otherwise delay in the issue of the Certificate may be caused.

Service found to be insufficient.

14. If after a candidate has passed the examination it is discovered on further investigation that his services are insufficient to entitle him to receive a Certificate of the grade for which he has passed, the Certificate will not be granted to him; but if the Port Officer is satisfied that the error in the calculation of the candidate's services did not occur through any fault or wilful misrepresentation on his part, he may either have the fee returned to him or have it placed to his credit. Should his services entitle him to a Certificate of a lower grade, it may be granted to him,

and the difference, if any, between the fee paid by him for the superior Certificate and the fee payable for the inferior Certificate will be returned to him or placed to his credit.

The Superior Certificate will not be granted until the candidate has performed the amount of service in which he was deficient, and has been re-examined in all the subjects unless the Government see fit to dispense with the re-examination.

Failure in examination.

15. If the candidate fails in practical knowledge he may not present himself for re-examination until he can produce proofs of three months' further service at sea, as Engineer on watch on the main engines or boilers, from the date of failure. If he fails in arithmetic, elementary questions, or drawing only, he may come up again at any time.

Fee must be paid first.

16. Candidates for examination, in making their application on the Form Exn. 3, will be required to pay the Examination fee before any step is taken towards inquiring into their services or testing their qualifications, &c. If the candidate is found not to be qualified, the fee will either be returned to him or placed to his credit until he is qualified.

Payment of fees.

17. The fee for examination must be paid to the Port Officer. In any case in which a candidate offers a gratuity to any other officer and in any place but in the Port Office, the candidate so offering a gratuity will be regarded as having committed an act of misconduct, and will be rejected, and not allowed to be examined for twelve months either at the Port where the offence was committed or at any other port.

Fees not returned on failure.

18. If a candidate fails in his examination, *no part of the fee he has paid will be returned to him.*

19. The fees are as follows :—

Table of fees.

	Rs.
Second Class Engineer's Certificate ...	15
First Class Engineer's Certificate ...	30
First Class Engineer's Certificate if candidate is already in possession of a Second Class Certificate of Competency granted by the Board of Trade, or by the Government of a British possession under section 8 of the Merchant Shipping (Colonial) Act, 1869	15

Qualifications required for the various grades.

Second Class.

20. SECOND CLASS ENGINEER.—A candidate for a Second Class Engineer's Certificate must be not less than 21 years of age;

(*a*) He must have served as an apprentice Engineer for four years in England or five years in India at least, and prove that during the period of his apprenticeship he has been employed on the making or repairing of steam engines, boilers, &c. Three years in England or four years in India of the apprentice time must have been passed in the fitting or erecting shops, or in both. In calculating the four years in England or five years in India of artisan service, which are to constitute the required apprenticeship, which should not begin at an earlier age than 15, time spent at a technical school (recognized by the Port Officer as suitable) where there is an engineering laboratory, may be taken into account and accepted as equivalent to artisan service, at the ratio of three years in the technical school to two in artisan service, provided that the applicant was over 15 years of age, and can produce the Principal's Certificate for regular attendance and satisfactory progress, and provided also that in such case the other portion of the time was spent in the fitting or erecting shops of an engineer, as indicated above.

Journeyman's time will be considered as equivalent to apprenticeship.

Every applicant must produce testimonials of ability as an engineer workman to the satisfaction of the Government.

If the candidate has not served for four years in England or five years in India as an apprentice Engineer, or as Journeyman, he will be required to have served, *in lieu thereof*, four years at sea as Engineer on regular watch on the main engines or boilers of a foreign-going steamer of not less than 66 nominal horse-power, or six years in a home-trade steamer of not less than 66 nominal horse-power.

(*b*) In addition to the apprenticeship as above described, or the alternative sea service, the applicant must have served one year at sea as Engineer on regular watch on the main engines or boilers of a foreign-going steamer of not less than 66 nominal horse-power, or eighteen months in a home-trade steamer of not less than 66 nominal horse-power.

(*c*) He must be able to give a satisfactory description of boilers, and the methods of staying them, together with the use and management of the different valves, cocks, pipes, and connexions.

(*d*) He must understand how to correct defects from accident, decay, &c., and the means of repairing such defects.

(*e*) He must understand the use of the water gauge, pressure gauge, barometer, thermometer, and salinometer, and the principles on which they are constructed, which

(*f*) He must state the causes, effects, and usual remedies for incrustation and corrosion.

(*g*) He must be able to explain the method of testing and altering the setting of the slide valves, and method of testing the fairness of shafts and adjusting them.

(*h*) He must be able to calculate the suitable working pressure for a steam boiler of given dimensions, and the stress, per square inch, on crank and tunnel shafts when the necessary data are furnished.

(*i*) He must understand the construction of steering engines, evaporators, feed filters, and feed heaters.

(*j*) He must understand the construction of centrifugal bucket, and plunger pumps, and the principle on which they act.

(*k*) He must be able to state how a temporary or permanent repair could be effected in case of derangement of a part of the machinery, or total breakdown.

(*l*) He must write a legible hand, and have a good knowledge of arithmetic up to and including vulgar and decimal fractions and square and

---

In the case of England, "foreign-going steamer" includes every steamer employed in trading or going between some place or places situate beyond the following limits, that is to say, the coasts of the United Kingdom, the Channel Islands and Isle of Man, and the Continent of Europe between the River Elbe and Brest, inclusive. "Home-trade steamer" includes every steamer employed in trading or going within the following limits, that is to say, the United Kingdom, the Channel Islands and Isle of Man, and the Continent of Europe between the River Elbe and Brest inclusive.

In the case of India, foreign-going steamer includes every steamer employed in trading between any port of the territories which are or may become vested in His Majesty by the Statutes 21 and 22 Vict., Cap. 106, entitled "An Act for the better government of India," and any port or place not in the said territories, nor on the Continent of India, nor in the Straits Settlements, nor in the Island of Ceylon. "Home-trade steamer" includes every steamer employed in trading between any ports of the said territories or between any port of the said territories and any port or place on the Continent of India or in the Straits Settlements or in the Island of Ceylon.

cube root. He must also understand the application of these rules to questions about safety valves, coal consumption, consumption of stores, capacities of tanks, bunkers, &c.

(*m*) He must be able to pass a creditable examination as to the various constructions of paddle and screw engines in general use, as to the details of the different working parts, external and internal, and the use of each part.

(*n*) He must possess a creditable knowledge of the prominent facts relating to combustion, heat and steam.

21. FIRST CLASS ENGINEER.—A candidate for a First Class Engineer's Certificate must be not less than 22 years of age. First Class.

In addition to the qualification required for a Second Class Engineer,

(*a*) He must—

(1) have served at sea for 12 months, with a Second Class Certificate of Competency or service as Senior Engineer in charge of a watch on the main engines or boilers of a foreign-going steam-ship of not less than 99 nominal horse power; or

(2) have served at sea for 18 months, with a Second Class Certificate of Competency, or service as First Engineer of a home-trade steamer of not less than 99 nominal horse-power; or 2 years as Second Engineer of a home-trade steamer of not less than 99 nominal horse-power, with a Second Class Certificate of Competency, or service; or

(3) have served 2½ years with a Second Class Certificate of Competency or service as third Engineer of a home-trade steamer of not less than 99 nominal horse-power, if during the whole of that period he has been the senior Engineer in charge of a watch on the main engines and boilers; or

(4) possess or be entitled to a First Class Certificate of service.

(*b*) He will be required to make an intelligible hand sketch, or a working drawing of some one or more of the principal parts of a steam engine, and to mark in without a copy all the necessary dimensions in figures, so that the sketch or drawing could be worked from.*

(*c*) He must also be able to take off and calculate indicator diagrams.

(*d*) He must be able to calculate safety-valve pressures, and the strength of the boilers shell, stays, and riveting.

(*e*) He must be able to state the general proportions borne by the principal parts of the machinery to each other, and to calculate the direct stress, the torsional stress, and the bending stress in round bars, and the direct stress and the bending stress in rectangular bars with given loads.

(*f*) He must be able to explain the method of testing and altering the setting of the slide valves, and to sketch about what difference any alteration in the slide valve will make in the indicator diagram, and also the method of testing the fairness of shafts and of adjusting them

(*g*) He must be conversant with surface condensation, superheating, and the working of steam expansively.

(*h*) His knowledge of arithmetic must include the mensuration of superficies and solids and the extraction of the square and cube roots, and the

* See Appendix C.

application of these rules to questions relating to the power, duty and economy of engines and boilers, and to the stresses in rods, shafts and levers of the engine.

(*i*) He must understand the construction of, and be able to maintain in working condition, the auxiliary machinery which is placed under his charge, viz, refrigerating machinery, electric light engines and dynamos, electric motors fitted to ships' boats, hydraulic machinery, and the various descriptions of steering engines, etc.

Workshop service where engines are not made.

22. When the workshop service has been performed in a place where steam-engines are not made or repaired, and the class of work done is similar to that required in engine making, the service may be accepted with an additional year in the engine-room; that is, four years in England or five years in India of workshop service and two years in the engine-room (of which one year must have been at sea) or one year at sea in the engine room and one year at engine fitting in a suitable marine engine workshop. The approval of the Port Officer must be obtained in every such case before the candidate is examined.

Workshop service other than fitting or erecting.

23. When the workshop service has been performed in a place where engines are made, and the department in which the applicant has been principally engaged is not "fitting" or "erecting," the case must be referred to the Government with a report upon the service performed. If the service be such as is useful training for an Engineer, the Port Officer may accept the service, but in every such case the applicant must prove additional engine-room or marine engine workshop service as required above.

Qualifying service defined.

24. In the case of candidates for First Class Certificates, qualifying service means service on regular watch as Senior Engineer in charge of the main engines or boilers. During the whole of the period claimed, candidates must have been in possession of Second Class Certificates.

In the case of candidates for Second Class Certificates, qualifying service means service as Engineer on regular watch on the main engines or boilers. In no case will time spent in clerical work be allowed to count.

Names on articles.

25. In all cases the candidates' names must have been duly entered on the ship's Articles as Engineers in their proper ratings.

Regular watch.

26. Being on regular watch means being on watch for at least eight hours a day.

Further as to qualifying service.

27. Only such service as gives the experience required to make a man thoroughly competent as a sea-going Engineer is accepted as qualifying service. Even for a Second Class Certificate the candidate must prove to the satisfaction of the Examiner that he is qualified by experience and knowledge to act as Chief Engineer in an under-powered steamer of 99 nominal horse-power on a voyage, say, India to Egypt, taking full responsibility for engines and boilers

Sea service.

28. The sea service required by these Regulations is, unless otherwise stated, service performed in foreign-going ships.

Home-trade service

29. Service in the Home or Coasting Trade is regarded as being equivalent to two-thirds of the same period of time served in the Foreign Trade, except in the case of Indian Coasting Voyages extending beyond a distance of 600 miles from the port of departure in steam-ships commanded by Masters holding Foreign-going Certificates, when such service will count as foreign-voyages, and will be reckoned as full time; but the time spent in the port of departure or Home Port will not be allowed to count. In all cases the length of service is deemed to commence on the date of sailing from the port of departure or Home Port and to end on the date of arrival at the Home Port. Such service must be vouched for in the form laid down in Appendix G.

Lake or river service.

30. Service as watch-keeper on a lake or river steamer of not less than 66 nominal horse-power may be accepted under the following conditions:—

(1) the service will only count half as much as sea service, *i.e.*, every two months of lake or river service is only equivalent to one month's sea service;

(2) candidates for second class certificates must prove, in addition to the lake or river service, at least three months' qualifying service at sea in a steam-ship of not less than 66 nominal horse-power;

(3) candidates for first class certificates must prove, in addition to lake or river service in vessels of 99 nominal horse-power, at least six months' qualifying service at sea, with a Second Class Engineer's Certificate, in vessels of not less than 99 nominal horse-power

Service in auxiliary screw steam-ships.

31. Service performed on board auxiliary screw whalers and other vessels with auxiliary steam-power of not less than 66 nominal horse-power in the capacity of Engineer may be allowed to count towards qualifying candidates for examination for Second Class Engineers' Certificates of Competency to the extent of one-half the time the vessel is actually at sea. If the candidate is able to prove a larger amount of time under steam, he will be allowed to count the whole of such extended time.

Service in pilot boats.

32. Service performed in pilot vessels will not qualify a candidate for examination.

Service in dredgers, trawlers or tug-boats.

33. Service in sea-going steam dredgers, trawlers, or tug-boats may be accepted under the following conditions:— Two months of such service is only equivalent to one month's qualifying service. Candidates for Second Class Certificates may perform all their sea service in sea-going steam dredgers, trawlers, or tug-boats, but they must have been on regular watch on the main engines or boilers, and the vessels must not be less than 66 nominal horse-power. Candidates for First Class Certificates must have served in vessels of at least 99 nominal horse-power, and have been in charge of a watch on the main engines or boilers. They must, in addition, have served in a qualifying capacity for at least six months in a foreign-going cargo or passenger steam-ship, or nine months in a home-trade cargo or passenger steam-ship.

Service in yachts

34. Service performed in steam yachts, either within or beyond home-trade limits, may be accepted as equivalent to two-thirds of the time performed in foreign-going trading vessels, provided that the candidate's name is entered on the vessel's Articles and that he can prove, to the satisfaction of the Port Officer, that the time claimed was actually served at sea.

Candidates for Second Class Certificates may perform all their service in yachts, but the candidate must have been on regular watch on the main engines or boilers, and the vessel must be of not less than 66 nominal horse-power.

Candidates for First Class Certificates must have served on vessels of not less than 99 nominal horse-power, and must have been in regular charge of the main engines or boilers. In addition they must have served for at least three months in a qualifying capacity on board a foreign-going trading or passenger steam-ship. This additional service will, however, not be required in the case of a candidate who has served for 18 months as first engineer, or for 2 years as second engineer, of a steam yacht of the requisite power.

First class Certificate without a Second class certificate.

35. The Government may see fit to allow an applicant who, in consequence of service abroad, has been unable to obtain a Second Class Certificate, to be examined for a First Class Certificate, although he has not obtained a Certificate of the lower grade, provided he is able to satisfy them as to the satisfactory character of his services. If any candidate who has not got a Second Class Certificate of

Competency fails to pass the examination for the first Class Certificate, but passes that for the lower grade, he may be given a Second Class Certificate of Competency, but no part of the fee will be returned. A candidate who has been permitted to be examined for a First Class Certificate without first obtaining a Second Class Certificate of Competency or service and who fails in his examination in practical knowledge, may not be re-examined for a Certificate of the higher grade until he has served 3 months as watch-keeper with a Second Class Engineer's Certificate of Competency or service as required by the regulations. If the candidate fails altogether, *i.e.*, both in the examination for the lower as well as for the higher grade of Certificate, he may be re-examined for a Second Class Certificate only, subject to the usual regulations relating to failure.

Certificates of service.

36. An officer who has attained the rank of Engineer or Assistant Engineer in His Majesty's Navy or Indian Marine service is entitled without examination, if an Engineer, to a certificate of service as First Class Engineer, and if an Assistant Engineer, to a certificate of service as Second Class Engineer. These officers may be examined for a certificate of competency on the same conditions as Engineers of the Mercantile Marine.

An officer who has attained the rank of Artificer Engineer in His Majesty's Navy or Indian Marine service is also entitled without examination to a certificate of service as Second Class Engineer.

Application of Naval Officers.

37. The Lords Commissioners of the Admiralty have directed that applications from officers of the Navy for Certificates of service or for permission to be examined for Certificates of Competency must, in the case of officers on the active list, be made through the Commanding Officer to the Secretary to the Admiralty, and in the case of officers on half pay direct to the Secretary to the Admiralty, who in either case will forward the applications to the Board of Trade.

Masters and Mates' Examination in steam.

38. Particulars of the examination of Masters and Mates in steam will be found in Appendix E.

Certificates.

39. The term Certificate in these Regulations means a Certificate issued by the Board of Trade or by a British Possession under the provisions of the Merchant Shipping Act

Conduct of the Examinations.

Commencement and duration of Examinations.

40. The examinations will commence early in the forenoon, and will be continued from day to day until all the candidates whose names appear upon the Examiner's list on the day of examination are examined

Examination of engine room Artificers.

41. Chief Engine Room Artificers, and Engine Room Artificers in the Royal Navy, may be examined for Certificates of Competency on the same conditions as Engineers of the Mercantile Marine.

Candidates to be punctual.

42 Candidates are required to appear at the examination room punctually at the time appointed.

Tables cleared.

43. Before commencing the examination, the tables and desks must be cleared of all scraps of paper or books that are not used in the examination, and care should be taken that the candidates do not bring into the examination room any book or paper.

Strangers not admitted

44. No persons will be allowed in the rooms during the examinations other than those whose duties require them to be present.

No instructors will be allowed on the premises.

Blotting paper

45. A sheet of blotting paper will be issued to each candidate with the first examination paper, and it must be returned to the Examiner when the last paper is completed each day. The Examiner will be careful to see that the blotting paper has not been used by the candidate in solving his problems, or for conveying information to other candidates.

All work to be shown.

46. No candidate will be allowed to work out his problems on a slate or on waste paper or to write on the blotting paper supplied for his use in the examination.

Violation of this rule will subject the candidate to all the penalties of a failure.

Additional sheets of paper will be supplied by the Examiner if required, but they must be attached to, and form part of, the examination papers.

Books and papers strictly forbidden.

47. All books necessary for the use of candidates under examination will be provided by the Government, and candidates are prohibited from bringing into the examination room books or papers of any kind whatever. The slightest infringement of this regulation will subject the offender to all the penalties of a failure, and he will not be allowed to present himself for re-examination for a period of three months.

Instruments are provided.

48. Candidates for First Class Certificates have to pass an examination in rough working drawing, which may, in the candidate's option, be either hand sketches clearly dimensioned and complete in the necessary views and sections, or drawings to a scale. Drawing boards and T squares will be provided by the Government, but the applicants will have to bring with them any drawing instruments they may require.

Candidates places.

49. Candidates should be so placed as to prevent one copying from another, and no communication whatever between the candidates should be allowed.

Penalty for copying, &c.

50. In the event of any candidate being discovered referring to any book or paper, or copying from another, or affording any assistance or giving any information to another, or communicating in any way with another, during the time of examination, or copying any part of the problems for the purpose of taking them out of the examination rooms, he will subject himself to all the penalties of a failure, and will not be allowed to be examined for a period of six months.

Leaving room or building.

51. No candidate may leave the examination room without permission and without giving up the paper on which he is engaged. Under no circumstances will the same paper be returned to him, but the Examiner may substitute other data, or another question.

Injury to books.

52. If a candidate defaces, blots, writes in or otherwise injures any book or form belonging to the Government, his papers will be retained until he has replaced the damaged book or document. He will not be allowed to remove the damaged book or document, and will be subjected to all the penalties of a failure.

Silence.

53. Perfect silence is to be preserved in the examination rooms.

Penalty for breach of rules.

54. Any candidate violating any of the regulations or being guilty of insolence to the Examiner, or of disorderly or improper conduct in or about the room, will render himself liable to the postponement of his examination, or, in the event of his having passed, to the detention of his Certificate for such period as the Government may direct.

Order of examinations.

55. The examination of candidates for Second Class Certificates consists of three parts: arithmetic, elementary questions, and *viva voce*; and that of candidates for First Class Certificates of four parts: arithmetic, drawing, elementary questions, and *viva voce* (*see* paragraphs 21 and 22).

Arithmetic.

56. When the number of marks obtained in arithmetic amounts to 28, that is, two-thirds of the maximum, the candidate passes in arithmetic.

If the marks obtained amount to 21, but not to 28, and if the applicant has had long sea experience, his testimonials should be taken into account, and his examination continued, if deemed advisable by the Examiner, and he may be passed or failed, having due regard to his practical knowledge, and to whether he is being examined for second class or first class.

Elementary questions.

57. All engineer applicants presenting themselves for examination will be required to give written answers to ten questions selected from Elementary Questions shown in Appendix B (not published). These questions are intended to furnish a record to some extent of the candidate's knowledge at the time of his examination, and also to induce the

candidates to pay more attention to their handwriting and spelling.

Examiners will require all candidates to fill up a form, Exn. 15b,* and they will forward it to the Port Officer, together with the report of the examination.

The questions for both classes of engineers will be taken from the same series of Elementary Questions; and candidates for first class certificates are expected to show their superiority by giving answers more complete than those of the other candidates.

Viva voce. 58. Having regard to the fact that when the verbal examination is held, the candidate has already passed in arithmetic, and, if a first class candidate, in drawing, and has also written answers to the elementary questions, the Examiners will deal with practical, rather than theoretical questions in this division of the examination; and no candidate should be failed without having been well cross-questioned on the points for which failure takes place.

Moreover in cases where the Examiner approves of the elementary paper but fails the candidate for lack of practical knowledge or for elementary, a written account of the points failed in must be forwarded to the Port Officer with the elementary papers and the report Exn. 15.

The elementary questions to be answered on Form Exn. 15*b** are good starting points in *viva voce* examinations. With the candidates' written answers before the Examiner, the same question can be put in a way requiring an answer in another form. Each question may be developed into several according to the circumstances of the case, *e.g.*—

1. What is made of? Of what parts does it consist?
2. What is its use?
3. What attention does it require at sea?
4. What attention does it require in port?
5. When it becomes defective, what is it that principally goes wrong with it?
6. How is it repaired?
7. What alteration may prevent a recurrence of the defect?

It is considered of great importance that engineers presenting themselves for examination should have an extensive knowledge of the particulars of actual casualties which have occurred at sea and be able to state how these might have been prevented, and how remedied. Sometimes an engineer presents himself who has had no personal experience of any defects, and who can tell nothing about casualties to machinery which have occurred in the experience of others: such candidates should be closely questioned as to their knowledge of boiler and engine construction and the repairs of same.

The management of engines and boilers at sea, the duties of the engineer on watch, the work to be done to the engines, boilers, and auxiliary machinery in port, and the periodical examinations of the working parts, form part of the *viva voce* examination.

Reports of examinations. 59. Reports of examinations on the form Exn. 15, together with the Examination Papers, should be forwarded to the Port Officer immediately the examinations are completed.

General.

60. Certificates of Competency shall be made and issued by the Government in the forms hereunto annexed.

61. Every Certificate of Competency shall be made in duplicate, and one copy shall be delivered to the person entitled to the Certificate, and the other shall be kept and recorded by the Port Officer of Calcutta.

62. No application from the holder of a certificate granted by the Government of any other British Possession or by the Board of Trade to be examined for a certificate of the same legal value shall be entertained.

* See Appendix A.

APPENDIX A.

FORM EXN. 155.

Form to be filled up by all candidates at the commencement of the examination.

Port	Class for which examined
Date	Candidate's name

A. Where and how long did you serve in works at the making or repairing of engines and boilers?

B. How long and in what capacity did you serve in works on shore other than at the making or repairing of engines and boilers?

C. How long have you served in the engine-room at sea, and in what capacities.

D. With what descriptions of engines have you served at sea? What sizes were the engines?

E. With what descriptions of boilers have you served at sea?

F. What engine defects or defects to auxiliary machinery have come under your notice; what caused these defects, and how were they remedied? Give the names of the steamers for verification.

G. What boiler defects have come under your notice; what caused these defects, and how were they remedied? Give the names of the steamers for verification.

APPENDIX B.

ELEMENTRAY QUESTIONS.

1.

What parts of an engine are generally made of wrought iron?

2.

What parts of an engine are generally made of cast iron?

3.

For what parts of an engine is steel sometimes used?

4.

What parts of an engine are generally made of brass or gun-metal?

5.

Where is "white metal" sometimes used? On account of what property possessed by it, is it adopted? What objection is there to its more general use?

6.

For what parts is Munts metal sometimes used? Is it malleable? For what properties is it valued?

7.

What difference is there in the composition of cast iron, of wrought iron, and of steel?

8.

How can cast iron, wrought iron, and steel be distinguished from each other?

9.

What are the different properties of cast iron, of wrought iron, and of steel?

10.

What is meant by the terms "breaking stress." "proo. stress," "safe working stress?"

11.

What is the cohesive strength, or breaking stress, of good-ordinary wrought iron?

12.

Tempering steel: how is it done, and in what order do the colours come?

13.

What is case-hardening?

14.

Which of the common metals or alloys can be forged, and which of them are brittle or "short?"

15.

What is meant by "welding?" Which of the common metals can be welded?

16.

The expansion of metals by heat; give examples of this in the engine and in the boiler.

17.

In the construction of steel cylindrical marine boilers for what parts have the plates to be worked hot? What precautionary treatment of these plates is afterwards necessary?

18.

In what parts of cylindrical marine boilers is the strongest riveting employed? In which of the shell seams is it most necessary?

19.

What is "caulking," and how are seams prepared for caulking?

20.

Describe the different ways of fastening the ends of the main stays of a boiler. What are the merits of, or objections to, the different plans?

21.

What stress per square inch is allowed on boiler stays?

22

Describe a riveted stay, and state where such stays are commonly used.

23.

Where are thin plates to be looked for in a boiler as it wears, and how is the thinness to be detected?

24.

How are boiler tubes fixed? What are "stay tubes," and how are they secured?

25.

Where is it generally that boiler tubes leak? How is this defect repaired? What are the causes of this leaking?

26.

What are the causes of cracked tube plates? Where are the cracks situated? How are they repaired?

27.

What is the difference between a "dry uptake" and a "wet uptake"? Which requires most repair? Why? Where have you seen a wet uptake?

28.

What is a superheater? What is its construction? What valves are on it? There is sometimes a gauge glass on it; what is that for? Are superheaters now in general use?

29.

What parts of a marine multitubular boiler are first injured by shortness of water?

30.

Where are angle irons sometimes used in the construction of a boiler, and where are flanged plates used?

31.

Priming; to what causes is it attributed? What means are applied to prevent it? What evils may be produced by it?

32.

Funnel draught; what makes it? What checks it?

33.

Flame sometimes seen at the top of the funnel; what causes this appearance? Is it beneficial or is it detrimental? Why so?

34.

A blast pipe: what is its construction? Where is it placed? For what is it used?

35.

How many bottom blow-off cocks are generally fitted to each boiler, and why are they so fitted?

36.

Blow-off cocks are sometimes fitted with a spanner guard? For what purpose is this? Describe how the guard is formed.

37.

Water-gauge test cocks; where are they placed? At what heights? Must the cocks themselves be at those heights? What provision is made for cleaning these cocks, should they ever become choked? When there are no test cocks, how is the height of the water ascertained?

38.

What is a dead-weight safety valve? Of what are the rubbing surfaces formed? How is a lock-up valve arranged to admit of lifting it or of turning it round, and to prevent adding to the weight?

39.

About what area of safety valve is now required by the Board of Trade? What is the effect of suddenly opening a safety valve when steam is up? To about what extent do safety valves rise when blowing off without being eased by hand?

40.

Spring-loaded safety valves: what advantages have they that are not possessed by dead-weight valves? What are the disadvantages, if any, as compared with dead-weight valves?

41.

Of what pieces does a glass water gauge mounting consist? How does it act? Where is it placed? At what height? Is it liable to derangement? How is its working tested?

42.

Glass water gauges have sometimes pipe connections top and bottom: what is the object of this arrangement? Should there be cocks at the extremities of these pipes? Why? or why not?

43.

Describe a Bourdon steam gauge. Some gauges have an inverted syphon pipe below them; what is its use?

44.

Why is a small cock sometimes put on the pipe leading to a steam gauge? Where should it be placed, and what error might be made by omitting to use it?

45.

Do steam gauges indicate the total pressure of the steam, or only a portion of that pressure? What is the pressure measured from?

46.

What is meant by the salting of the boiler? How is this prevented? What is the density of ordinary sea water? How is the density ascertained? What is the difference between the formation of scale and the salting of the boiler? What is the maximum density at which boilers should be worked at sea? In the event of condenser tubes leaking, what is the minimum density at which boilers should be worked? Give your reasons.

47.

Scum cocks and pipes; how are they arranged? Where are they placed? At what height in the boiler? When are they used? When must they be shut? Neglect of these cocks lead to what dangers.

48.

Scale; of what does it consist? Where is it most objectionable? How is it removed? How is its formation prevented? What evil effects are produced by it?

49.

What is a Salinometer? Of what does it consist? How does it act? How is it graduated? Can it be used at any temperature indiscriminately?

50.

What harm may be done through the check valve of one of a set of boilers being defective while under way? How would you work to avoid this harm?

51.

How is the leak from a split tube stopped in a boiler at sea? Describe the operation.

52.

What is the use of dampers? Where are they fitted? When should they be used?

53.

When there are no dampers fitted, what is used instead? What evil to the boiler is sometimes attributed to this? When the heating surfaces are clean, does this occur?

54.

Describe the piston of a steam cylinder, with its different rings and their uses. There are generally round pieces let in flush on one side of a pistion; what are they? How are these pieces fixed?

55.

Cylinder drain cocks; what is their use? There is sometimes a valve upon each cock; what purpose does it serve?

56.

Cylinder escape valves; of what do they consist? How protected? How regulated? When are they most needed? To what danger do they expose the engineer? What precaution is sometimes used to obviate this danger?

57.

What is a compound engine? What different kinds are there for screw steamers, in respect to the number and arrangement of their cranks and cylinders? What is a triple expansion engine?

58.

What is link motion? What are some of its advantages? In modern engines for the screw propeller, when there is no link motion, what takes its place?

59.

What is a separate expansion valve? Why is it not fitted to all engines? What effect has an expansion valve upon the starting and upon the reversing of the engine?

60.

What arrangement is applied to reduce the friction of a slide valve? To what is the friction due?

61.

Describe a loose eccentric; how does it act? In what engines are the loose eccentrics still employed?

62.

What is the travel of the eccentric rod? How is it measured on the eccentric? What is the travel on the slide valve when the link motion is in mid gear, and the engine still moving?

63.

What are "double beat valves"? What objections are there to their use?

64.

What is a circulating pump? Is it always worked by the main engine? Give an example from your last steamer of the three water temperatures generally noted by careful engineers.

65.

An air valve is sometimes fitted to a circulating reciprocating pump; what purpose does it serve?

66.

What is the difference between a bucket air-pump, a piston air-pump, and a plunger air-pump?

67.

Whether are double-acting air-pumps made with plungers, with pistons, or with bucket? Circulating-pumps: describe their construction and action

68.

What is an air-pump trunk? When is it necessary? How is it attached to the bucket? Centrifugal pumps: describe their construction and mode of working.

69.

What class of air-pump requires both foot and delivery valves, and in what other class can either of these valves be in some cases dispensed with?

70.

What are marine governors? What is their general construction? How do they act?

71.

With a surface condenser and a single acting air-pump, what is the effect of a leaky foot valve, and what is the effect of a leaky bucket when there is also a foot valve?

72.

Air-pump pet cock or valve; where is it placed? How does it act? What is its object? Does it in every case reduce the effective capacity of the pump? Is it equally applicable to double-acting pumps?

73.

At what temperature is the hot well worked? What is the effect of higher temperatures? What is the effect of lower temperatures? What limits the lowness of temperature? Has a very low temperature any disadvantages?

74.

Bilge injection with common condensers; what are the fittings required? When is it used? What precautions are necessary in using it?

75.

When surface condensers are used, what takes the place of the bilge injection? To what is the connection made? How is its valve formed? Why is this necessary?

76.

What are the practical guides to the proper amount of opening of the inlet valve for the circulating pump?

77.

Feed-pump pet-cock or valve: where is it placed? What is its use? How does it act? Is it always a necessary fitting?

78.

What are some of the ways of fastening the ends of surface condenser tubes? About what size and about what thickness are condenser tubes? What parts of a surface condenser are made of brass?

79.

What is a blow-through valve or cock? To what is it attached? There is sometimes a valve that when opened admits steam from the slide valve casing to the exhaust port: what is its use? To which cylinder is it fitted?

80.

What are snifting valves? Why are they generally omitted now?

81.

What connexions are generally fitted to the donkey pump and to what services can it be applied?

82.

When the engines are stopped with steam up, what are to be shut and what are to be opened?

83.

How is an engine heated up before starting? What precautionary examinations are made before starting?

84.

What is an interceptor or catch-water? Where is it fixed, what is it construction, how does it act, and what attention does it require?

85.

Describe an air-pump bucket, with its valve or valves and its packing Of what are the valves generally made?

86.

Of what materials are air-pump rods made? Why so?

87.

What is the racing of the engine? When does it occur? What danger attaches to it? What is done to prevent it?

88.

When under way, when the air-pump bucket is at the top of its stroke, at what height is the water in the condenser?

89.

What is meant by the "pitch" of a screw propeller? How is it measured?

90.

Explain the difference between a "right hand" and a "left hand" propeller, and state how each of them revolves.

91.

What is the slip of a screw propeller? How is its amount expressed in figures?

92.

Which of the valves about engines and boilers have to be worked by hand, which of them work self-actingly, and which are worked by the motion of the engine?

93.

Why is soda sometimes put into a boiler, and how is it put in when under way? What is the kind of soda used?

94.

Tallow cups for cylinders were sometimes made with two small cocks, or with only one small cock, or with one large hollow plug cock, or with one small cock and a valve: which of these is suitable for a high-pressure cylinder, and which for the cylinder of a condensing engine? Describe how the cup with only one small cock is used. What is now generally used instead of these? How has this change come about?

95.

Does a cylinder escape valve, self-acting, allow all the water to escape? If not, how much is left in the cylinder?

96.

What is a "Steam Lubricator" (sometimes called an Impermeator)? Explain its action? To what part of the engine is it connected? Whether will throwing cold water over it make it work faster or slower? Describe the one used in your last steamer?

97.

A common paddle wheel: of what is the centre made? Of what are the arms formed? What is the form of the bolts which attach the floats to the arms? How are the arms attached to the centres?

98.

Why have some paddle wheels one or more cast-iron floats in each wheel? With what engines are these most required? At what part of the circumference are they placed?

99.

Why are paddle wheel floats sometimes made of different breadths in the same wheel? With what description of engine is this most needed? Where are the broad floats placed and where are the narrow floats placed in the circumference of the wheel?

100.

What difference is there between a radial paddle wheel and one with feathering floats? What is the object of feathering floats? Are all the eccentric rods attached in the same way, and are they all of the same form?

101.

Whereabout is the centre of the eccentric of a paddle wheel with feathering floats placed? In that case are the feathering leavers on the striking face or on the back of the float? When the paddle shaft has an outer bearing, how is the eccentric made?

102.

Of what materials are the working surfaces of a paddle wheel with feathering floats? How are they lubricated?

103.

What is a "Disconnecting Paddle Engine?" At what place is the disconnecting effected? How is it accomplished? In which of the cranks of a disconnecting engine are the crank pins fixed?

104.

Whether is link motion valve gear or the loose eccentric generally used for disconnecting paddle engines? For what steamers are disconnecting paddle engines frequently employed?

105.

What are expansion joints? Where are they necessary? What attention do they require? Of what should the working surfaces be made?

106.

What omission in the construction of expansion joints may lead to a serious accident when steam is first applied? How is this prevented in the construction of a steam trunnion pipe for an oscillating engine?

107.

Describe an oil cup with a syphon worsted? How is the worsted arranged? How is it cleaned? How far down the tube does it extend?

108.

Describe a thrust bearing; which of the surfaces wears? Why are there sometimes a number of oil tubes for one thrust bearing?

109.

What parts of a screw shaft are generally covered with brass? Why is this necessary? About what thickness is the brass?

110.

What is the stern tube or screw shaft pipe? Why is a pipe of such a length required? Of what is it made? How is it fixed at each end?

111.

What is a *lignum vitæ* bearing? How is the wood fitted? Where is such a bearing generally used?

112.

How is a screw propeller fixed on the shaft? What means are used to prevent its getting loose at sea?

113.

Where are sluice valves placed? What large sluice valve is there in almost all screw steamers? From what position should this valve be worked? Why so? What attention should it receive?

114.

With a condensing engine; what valves or cocks are on the skin of the ship in the engine-room and in the stokehole?

115.

What are the necessary fittings of a marine boiler?

116.

With a surface condensing engine, what cocks or valves are opened some time before the engine is started so as to be ready for starting whenever the order is given?

117.

What is a steam jacket? What cocks are on it? In what engines are jackets most generally used? Do they require to be felted?

118.

What parts of an engine or its fittings should be felted or otherwise protected from radiation?

119.

What are the small cylinders sometimes fitted on the slide valve casing cover of vertical engines? Explain their action. To what are they connected by a pipe? Why so?

120.

Name the principal pipes in connection with the engines and boilers of a steamer, and state to what the ends of these pipes are connected?

121.

Through what cocks or valves, pipes and chambers does the water pass on its way from the sea inlet rose plate to the water space of the boiler, with a jet condenser?

122.

Through what cocks or valves pipe and chambers does the circulating water of a surface condenser pass?

123.

Through what cocks or valves, pipes and chambers does the steam pass from the boiler until it is in the from of water in the hot well?

124.

Name the pieces of the engine through which the pressure of the steam is transmitted from the piston to the screw propeller? Name them in the order in which they act?

125.

What is an air vessel? How does it act? At what parts of an engine or of its fittings are air vessels generally applied?

126.

What is the construction of a mudbox? Where should mudboxes be placed? Why are they necessary? How should the space be divided by the rose plate, and why?

127.

What is a trunk engine? Why has it fallen into diruse?

128.

What is an oscillating engine? For what steamers are oscillating engines generally adopted? Why? How is the steam conveyed to and from the slide valve casing?

129.

Of what parts does the valve motion gear of an oscillating engine consist.

130.

For what have geared engines sometimes been used? Of what were the cogs of the large wheel made?

131.

At what part of a screw steamer is the pressure that propels it applied to the hull?

132.

At what part of a paddle steamer is the pressure that propels it applied to the hull?

133.

About how much fuel per indicated horse-power per hour is required by modern steam engines, common, compound, and triple expansion?

134.

What is the explanation of the economy of the surface condenser?

135.

What is the construction of a surface condenser? Of what are its tubes made? How are they fixed? How are they kept tight? What is done with a split tube?

136.

Where do surface condensers foul? How are they cleaned?

137.

What non-conducting substances are employed to prevent radiation, and how are they applied?

138.

In the construction of smoke-box doors and of dry uptakes, what provision is made to lessen the amount of radiation?

139.

How can the formation of black smoke be prevented? Describe smoke-preventing apparatus?

140.

What is meant by "circulation" in a boiler, and what are the results of defective circulation?

141.

What means are sometimes adopted to improve the circulation in a boiler?

142.

By what arrangement is the circulation promoted in a "hay-stack" boiler?

143.

Describe a ship's side air-pump discharge valve; in what respects does it sometimes differ from a common stop valve, and what attention does it require?

144.

What is the construction of a feed escape valve, to what is its discharge connected, and how is its loading regulated? Where should the escaping water flow?

145.

When there is no feed escape valve, what is the arrangement of the feed valves or cocks?

146.

What is the measure of a horse-power? How is indicated horse-power ascertained?

147.

Has "nominal horse-power" a fixed meaning? What is the use of this expression? What is generally taken as the measure of one horse-power nominal?

148.

What is "back pressure" in a cylinder? About how much is it in each of the cylinders in your last steamer? Is excessive cushioning ever a trouble under certain conditions in modern engines? Say when and why and in which cylinder this occurs?

149.

What is meant by "speed of piston?" About how much is the speed of piston in modern marine engines?

150.

What is "atmospheric pressure?" What is its average amount? What instrument tells this amount?

151.

What is "gross pressure" or "absolute pressure?" What pressure is it that is shown by the steam gauge?

152.

What is meant by "cutting off" steam? How is it done? What part of the valve regulates the cut off?

153.

What is a piston slide valve? Describe its construction? Why are such frequently employed in place of the common slide valve? What is a great drawback to the use of these valves?

154.

What fixes the time of closing the exhaust? After the exhaust is closed and before the port opens for steam, what becomes of the steam that is in the cylinder?

155.

What is the "lead" of the valve? What is its object? About what amount is it?

156.

What is the "cover" or "lap" of the valve? What is its object? About what proportion of the stroke of the valve is it made?

157.

What is the "exhaust cover" of a side valve? What is its effect upon cushioning and upon exhaust?

158.

What is "minus cover" or "minus lap" on the exhaust? What is its effect upon the exhaust and upon cushioning?

159.

What is "cushioning" or "compression" in a steam cylinder? How is it affected by the amount of cover or of minus cover there may be upon the exhaust? How is it affected by the exhaust pressure?

160.

What is "mean effective pressure?" How is its amount ascertained?

161.

What is a dial vacuum gauge? What is its construction? For what is it used? About what amount should it show when the engine is working all right? What effect has the variations it indicates on the performance of the engine?

162.

Does the vacuum gauge enable you to tell what pressure there is in the condenser, or must you have recourse also to the barometer to arrive at that? How would you

ascertain the actual amount of back pressure there is in the condenser?

163.

What is a barometer? What is its construction? Is a barometer sometimes used instead of a vacuum gauge? In what respect does the weather barometer differ from the vacuum gauge barometer?

164.

The common vacuum gauge and the common steam gauge: in which of them are the graduations marked from atmospheric pressure? Does either of them tell what is the true actual pressure in the boiler or in the condenser?

165.

Do steam and vacuum gauges vary with the variations of the weather barometer? When the weather barometer varies from 29 to 31, how much will the vacuum gauge vary and how will that affect the working of the engine? Why?

166.

Vacuum is generally stated as so many inches. What is meant by, say, 20 inches vacuum? What does that tell us about the absolute pressure of the vapour then in the condenser?

167.

From what depth will a pump draw water? Is there any limit? Why?

168.

What is vacuum? Can vacuum move a piston? When the temperature of the water in the condenser is 212°, what is the greatest degree of vacuum there can then be in the condenser?

169.

What is a thermometer? its construction? What is the property of matter that is the principle of its construction? What temperatures are regularly noted by careful engineers?

170.

What is the temperature of (1) melting ice, (2) of boiling water, (3) of steam about 60 lbs. pressure by the steam gauge, (4) of steam about 100 lbs., and (5) of steam about 150 lbs., also (6) smoke in the funnel, and (7) of water in the hot well?

171.

What is meant by the "conduction" of heat? Give examples of it in the boiler and in the engine.

172.

What is meant by the "convection" of heat? Give examples of it in the boiler and in the engine.

173.

What is meant by "radiation" of heat? Give examples of it in the boiler and in the engine.

174.

Which is convection, which is radiation, and which is conduction in the following cases?:—(1) Heat from the glowing fuel to the furnace crown. (2) Heat passing from one side of the furnace crown plate to the other. (3) Heat passing from the steam pipes in the engine room. (4) The heat of evaporation.

175.

What are the effective heating surfaces of a marine boiler?

176.

What parts of a marine engine are exposed to danger when the temperature is below freezing point?

177.

What precautions are necessary in cold climates when the temperature is below freezing point?

178.

State as many ways as you can by which a boiler might not get its full feed. A boiler, or one of a set of boilers, gets short of water although the feed valve is open its proper amount. to what causes might this be due?

179.

Of what are furnace bars generally made? About what thickness are they at the top? About what space is between them? Whether are the bars put further apart for Newcastle coal or for Welsh coal?

180.

Which burns faster—Newcastle coal or Welsh coal? Which is the flaming coal? Which makes most smoke?

181.

About how many tons of steam coal will be burnt per day in four furnaces, each of 6' wide, and of about the usual length? On what grounds do you say so?

182.

About how many tons of steam coal will be burnt per day with good triple expansion engines to drive an ordinary steamer of 40 feet beam 10 knots an hour by steam alone? On what grounds do you say so? What percentage more coal would be required to propel the same steamer one knot faster?

183.

About how may tons of steam coal will be burnt per day, with a good triple expansion engine, surface condensers the low pressure cylinder 60 inches diameter, doing average work? On what grounds do you say so?

184.

A pair of inverted cylinder direct acting engines, there is a liner half an inch thick between the ahead eccentric rod and the eccentric strap; in overhauling the engine this piece is lost and forgotten; what difference will its omission make in the working of the engine, on the admission, on the cut off, and on the exhaust of the steam? Which will take place earlier and which later, distinguishing between the up stroke and the down stroke?

185.

A pair of inverted cylinder direct acting engines driving a right-hand screw: on which of the crosshead guide bars is the pressure greatest in the up stroke, and on which in the down stroke?

186.

A screw propeller is getting loose, it has a little play on the shaft, sideways on the key or feather: how will this show in the engine-room.

187.

How would you prove whether the centre line of the trunnions of an oscillating cylinder be fair with the centre line of the main shaft?

188.

How can the fairness of a line of screw shafting be tested without lifting the shafts?

189.

Where are steel forgings generally used in marine engines?

190.

What is the composition of nickel-steel? Where is it sometimes used in engines and boilers?

191.

How is forced draught generated on board ship and supplied to boiler-furnaces? Is the air heated before delivery? If so, how?

192.

What is "induced" draught? Compare the merits of "forced" and of "induced" draughts?

193.

How is the intensity of the draught measured? What is the usual pressure employed in the mercantile marine?

194.

An explosive gas is liberated from bunker coal. Usually in well ventilated bunkers this gas escapes into the atmosphere without doing harm. In ill-ventilated bunkers the gas after mixing with a certain proportion of common air has been known to explode when a naked light has been brought in contact with it. What is the composition of the gas? Where is it found, in bunkers, 'tween decks, pockets,

and coal shoots? How may it be got rid of as soon as it evolves from the coal? How many cubic feet of air to one of the gas forms a violent explosive mixture?

195.

A lighted lamp or candle has sometimes been lowered into an apparently empty paraffin tank and produced an explosion resulting in injury to the person holding the light. What did the tank probably contain, and what produced the explosion?

196.

In vessels carrying coal-cargoes it has been observed that, generally speaking, the gas which escapes from the body of the coal is found more abundantly at the forward end of the hold than at the after end. Why should this be so?

197.

In recently opened ballast tanks, double-bottoms, and boilers, a light lowered into either has sometimes been extinguished. What would, in all probability, cause this?

198.

In double-bottom steamers where does the bilge water lie, and where are the roses of the bilge pipes fitted?

199.

What is the advantage of a large rose over a small one?

200.

Why, especially in vessels carrying cargoes liable to shift, should engine bilge suctions be fitted to both wings of the bilge?

201.

In a heavily listed vessel, why is it difficult to keep steam?

202.

If the engine bilge pumps get choked and water accumulates in the stokehold bilges, what effect does the water have upon the bilge boards and stokehold plates, when the ship is rolling violently?

203.

In a triple-expansion engine, what spare gear do you consider necessary in the case of a foreign-going ship? Also, what stores would you provide for a voyage to New Zealand?

204.

What means are sometimes provided for temporarily coupling together the broken parts of, say, a tunnel-shaft? Describe the fitting?

205.

Does the pressure on the thrust-collars vary with the horse-power, or with the speed of the ship, or how?

206.

If the holding-down bolts of a thrust-bearing should become slack, what effect would it have upon the working of the engines?

207.

In an engine with three cranks, which of the three is subject to the greatest torsional stress (1) in going ahead, (2) in going astern?

208.

Is it usual to make the crank shaft of a triple or quadruple expansion engine in one piece? And is the diameter of the shaft uniform from end to end? Give your reasons for the practice which obtains?

209.

In a "built" crank shaft how are the webs rigidly secured to the pins and to the body of shaft?

210.

There are various descriptions of donkey engines in use on board ship for pumping purposes. Some pumps are fitted with escape-valves, some are not. Why should this be?

211.

Explain the function of an air-vessel fitted to a feed pump. Make rough hand sketches of (1) a satisfactory vessel, (2) an unsatisfactory vessel, where, say, the air-spring has been destroyed by carelessness, or has never been properly provided?

212.

Should cocks or escape-valves be fitted to air-vessels? Why, or why not?

213.

Where, by preference, should the escape valve of a feed pump be placed? Why?

214.

Scum cocks are sometimes fitted to boiler-shells at a height convenient for Engineers to manipulate when standing in the stokehold; the scum pipes in such cases are led upward, inside the boiler, to a little above the combustion chamber tops. What danger may arise from this arrangement?

215.

Cocks for testing the water level of boilers are sometimes fitted within reach of the engineer who is standing in the stokehold. These may have internal pipes leading upward and terminating at various levels. Under what circumstances may these become misleading?

216.

Why should the pipe which leads from the bottom of the water-gauge column to the bottom of the boiler-front, or back, be covered with non-conducting material? Why also should it never have lengthy horizontal bends?

217.

In your own experience, how frequently is this pipe removed and cleared?

218.

Why, even with the best of water-gauges, is it advisable to occasionally use the drain-cock?

219.

Steam loops have sometimes been inadvertently made in the length of piping leading from the top of the water-gauge column to the top of the boiler. Roughly sketch such a loop and explain the danger arising from its existence?

220.

Describe your method of thoroughly testing the water-gauge system to satisfy yourself that all the cocks and pipes are clear. Your answer can be written on a supplementary sheet of foolscap, which the examiner will hand you. Hand sketches, mere lines indicating pipes and circles indicating cocks, should be made. Identify the cocks and pipes by letters or numerals.

221.

Describe the construction of a water-tube boiler, mentioning the type selected?

222.

In a water-tube boiler, how is an economiser fitted, and what is its duty?

223.

How is the water-gauge fitted? Are glass-gauges used?

224.

The pressure of the steam in water-tube boilers is sometimes greater than at the engines. Why is this, and what percentage above the engine pressure does it amount to? How is this difference of pressure maintained?

225.

Describe any automatic method of feeding water-tube boilers. Of what material are the tubes made?

226.

Describe the construction of any steam turbine you are acquainted with, which is used on board ship. How is the expansion of steam effected? How many propeller shafts are employed, and how many propellers?

227.

Is the same power available to go astern as to go ahead?

228.

Of what material are the propellers made?

229.

How many pounds of coal per indicated horse-power per hour are burnt with this type of engine? Name the type of boiler in use?

230.

Describe one of the several classes of refrigerating machinery in use on board of ship. Several types exist, one being more economical than the rest. Which is it?

231.

Describe the defects to which the selected type is subject How are the defects overcome?

232.

How frequently are the parts opened out for examination? Name the parts?

233.

How frequently are the condensers of refrigerating plants opened for examination? How frequently are the coils tested by hydraulic pressure? On which side of the coil is corrosion most commonly found? Why should this be so?

234.

Where ammonia is used in refrigerating machinery, should the machinery by preference be isolated? Why? In reply, give what information you possess bearing on the matter naming the ships for purposes of identification.

235.

Explain how the ammonia is removed from the tubes in which it is supplied, and how passed into the refrigerating machine?

236.

What objection is there to the presence of water in the ammonia?

237.

Describe the ammonia process of refrigeration.

238.

Of what material are the parts made which are in contact within the ammonia?

239.

Are escape-valves fitted to the compressors of ammonia machines?

240.

What is the maximum pressure found in the compressors of ammonia machines?

241.

What kind of pressure and other gauges are used in ammonia machines?

242.

Explain how carbolic acid is removed from the tubes in which it is supplied, and how passed into the refrigerating machine?

243.

What objection is there to the presence of water in the carbonic acid?

244.

Describe the carbonic acid process of refrigeration?

245.

Of what material are the parts made which are in contact with the carbonic acid?

246.

Are escape-valves fitted to the compressors of carbonic acid machines?

247.

What is the maximum pressure found in the compressors of carbonic acid machines?

248.

What kind of pressure and other gauges are used in carbonic acid machines?

249.

In which type of machine is brine used? What is its density? Where does it circulate?

250.

Are fans for circulating air used in any of these processes? If yes, why are they necessary?

251.

What means are in some cases employed for ascertaining the temperatures of refrigerating chambers without entering them?

252.

What effect may the swabbing of the compressor-piston rods have upon the working of refrigerating machinery?

253.

What is a rectifier? Explain its use?

254.

Describe the cold-air process of refrigeration?

255.

Of what material are the air suction and delivery valves made? How are the valves kept on their seats?

256.

How many compressors are there to a cold-air machine?

257.

What is the duty of the expansion cylinder of a cold-air machine?

258

What objection is there to the presence of moisture in the air passed through the cold-air machine?

259.

How is water to some extent removed from the air? What is the minimum temperature of the air?

260.

What is the maximum pressure found in the compressors of cold-air machines?

261.

What kind of pressure and other gauges are used in cold-air machines?

262.

In refrigerating engines generally, to where is the exhaust steam led?

263.

Cold-air chambers on board ship are insulated. How insulated, and why?

264.

Is it prudent to allow the wires of an electric circuit to pass through the insulation? Explain fully.

265

Describe the construction of a feed water-heater and give the name of its manufacturer.

266.

Describe any well-known ash-ejector.

267.

Describe any well-known independent feed pumps.

264.

Are independent feed pumps automatic in their action? Explain the action.

269.

What advantage, if any, have independent feed pumps over feed pumps worked by the main engines?

270.

To about what temperature is the feed water raised by passing through a feed-heater?

271.

What fittings are usually placed on a feed-heater? Why are they necessary?

272.

Describe the construction of a feed filter, enumerating its valves and cocks.

273.

How can the filter be cleaned? and what ingredients are generally removed when cleaning takes place?

274.

What is the intercepting material made of? How is it fitted?

275.

Describe an evaporator, and mention the type?

276

What fittings are necessary with evaporators?

277.

How is the brine got rid of?

278

How may the coils be cleaned?

279.

What is a dynamo? Describe its various parts? For what is it used?

280.

In what respect does an electric motor differ from a dynamo? Where are electric motors sometimes used on board ship?

281.

Describe a system of electric lighting employed on board ship?

282.

How is the position of a fault in the circuit discovered?

283.

What is "sparking," and may it under some circumstances (naming them) be a danger?

284.

What is "short-circuiting," and to what evil may it give rise?

285.

What means are employed to prevent any part of the circuit becoming overheated?

286.

Describe the features of an arc lamp

287.

Describe the construction of a glow-lamp.

288.

What is the usual candle-power of the small glow-lamps in general use on board ship?

289.

Define the following terms:—Ampère, volt, ohm, watt. What is the measure of an electrical horse-power?

290.

Explain the uses of switches, brushes, commutators, cutouts field-magnets, armatures and resistance-coils.

291.

Why is it desirable to fit a dynamo in a cool place on board ship?

292.

What undesirable effect will ultimately occur to an electric wire, whose sectional area is constantly diminishing, say, through corrosion?

293.

What danger might arise from leading electric wire through coal bunkers?

294.

Is it better to lead electric wires, above or below side-scuttles? Why?

295.

What instruments are used on board ship to ascertain the strength of an electric current?

296.

Many ocean going steamers are fitted with hydraulic cranes &c. From where do they obtain their power? How is the hydraulic pressure kept at a relatively constant amount?

297.

Is any difficulty experienced in working hydraulic cranes in frosty weather? If so, why?

298.

Describe any steam steering gear you are acquainted with?

299.

When the helm is put hard over and the ship is going full speed ahead, what prevents the rudder returning to the amidship position?

300.

In the case of a steamship under way, does the officer, or man manipulating the steam steering wheel, overcome any resistance exerted by the rudder?

301.

Explain clearly what is being done by a helmsman manipulating the wheel of a steam steering engine?

302.

Is there any difference between the amount of horse-power required to put a helm hard over, in a given time, when the vessel is going full speed ahead, and when she is going full speed astern? This question refers to a case of a steamer fitted with one rudder only, and demands a more complete answer than merely "yes" or "no."

303.

What precautions should be taken before removing a manhole-door from a steam-boiler and why are these precautions necessary? In the absence of such precautions what casualties might occur?

304.

Describe the chief features of the engine-governor fitted to a steamer you have served in. Describe its action. Give the maker's name and name of ship.

NOTE.—The following six questions refer to oil-motors, fitted to launches which carry passengers:—

305.

Name the principal parts of an oil motor, and briefly state their functions. Give the name of the makers of the motor.

306.

What kind of oil is usually employed in oil motors? What is its flashpoint? What its specific gravity? What its calorific power? What precautions are taken in its storage to guard the public against casualty by fire or explosion?

307.

How many cylinders are generally used in oil motors? What kind of pistons are fitted? How frequently (measured in revolutions) is explosion per cylinder effected? How is explosion in the cylinder carried out?

308.

Describe how an oil motor is started. If starting prove difficult, where would you chiefly look for defects? How is piston speed modified? How is the speed of vessel varied? How is reversing effected?

309.

Before examining an oil motor with a naked light, what steps should be taken for safety's sake?

310.

How frequently should an oil motor, working 12 hours a day, be opened up for examination, cleaned and its parts readjusted? What difficulty arises when the internal parts become foul with carbonised oil?

NOTE.—Questions isolated from their context should be read in the light of the context. Thus the "sparking" referred to in question 283 relates to the sparking in an electric lighting circuit on board ship. *See* question 281.

APPENDIX C.

EXAMINATION in ROUGH WORKING DRAWING for a FIRST CLASS ENGINEER'S CERTIFICATE of COMPETENCY. (FORM EXN. 17).

1. The regulations in regard to the qualifications of a candidate for a first class engineer's certificate of competency specify that—

"He must be able to make rough working drawings of the different parts of the engines and boilers.

"He must be able to state the general proportions borne by the principal parts of the machinery to each other."

2. In accordance with these clauses, a candidate for a first class certificate is required to make a rough working drawing of the parts specified as on page 34. An engineer who has been some years in charge of marine engines and boilers ought to have familiarly in his mind the general construction of at least one set of engines and boilers, say that set he was last with. Fine drawing is not expected, and in the proportions of the parts a wide margin will be allowed; absurd dimensions will be failure in practical knowledge.

3. The drawing must, however, be practically a working drawing, giving a sufficient number of views to show the parts fully—sections, plans, or elevations, just as the candidate would require to be supplied to him if he had to make the parts to the design of another person

4. A clear hand sketch showing the construction completely and fully dimensioned will be accepted if the candidate prefers this alternative.

5. A portion only of the parts specified may be accepted in place of the whole, if that portion is sufficient to show that the candidate has a good practical idea of the construction of the parts, and a fair notion of their general proportions or dimensions.

6. Candidates are hereby cautioned not to put on paper what they have not fully considered, and deliberately intend to be understood, as their statement of what they know about the construction of any part required.

7. The statements given in by a candidate may be in themselves, apparently, of little importance, but as sample material from which the state of the candidate's knowledge of engines and boilers is to be inferred, every detail which is glaringly inconsistent with a sound knowledge of the use of the part, or in which an essential consideration has evidently been overlooked, is an important element in the description which the candidate is giving of his own qualifications.

8. The candidate is advised not to begin more than he can clearly finish in the time allowed An important object in this part of the examination is to ascertain whether the candidate can be trusted to mark all necessary dimensions upon a sketch or a drawing. The test of this is, practically, the making of the part from the sketch without having to supply additional dimensions, and without measuring the drawing. To prove this ability the candidate must fully dimension the parts shown in his sketch or drawing, notwithstanding that the parts may be correctly drawn to scale. A drawing is fully dimensioned when no part of it is left to the option of the party who is to work to the drawing.

9. To prevent misunderstanding, however, when the candidate has been led into showing more of the details than he has time fully to finish, he should name, in the statement on the other side, the particular parts which he has fully dimensioned.

10. All dimensions should have lines and darts, to indicate distinctly the points between which the dimensions are given.

11. Beware of writing cross dimensions upon centre lines, or upon longitudinal dimension lines. This is not an order but a recommendation.

12. The candidate is not expected to design anything; he has merely to sketch or draw a something with which he is expected to be already familiar. At the same time he should call attention to any defect in the design of the article or apparatus. Omission to do so will imply want of practical knowledge.

13. Pencil in nothing after half-past 3; all the dimensions, the figures, and the darts must be inked in; employ the remaining time in examining the drawing and in inking in any figures which may have been before overlooked, and in checking the dimensions.

14. Make sure that you will have sufficient room on the drawing sheet to show all the necessary views. You can

have another sheet of drawing paper if necessary. All the paper used must be forwarded with the drawing.

SUBJECT FOR EXAMINATION IN ROUGH WORKING DRAWING (FORM EXN. 17A).

(Specimen).

Read the for going general instructions.

A common slide valve with its spindle. Show also an outline section of the ports at the cylinder face. Show the provision for connecting the slide valve to the spindle.

The candidate is requested to fill up the following, and to attach this paper to his drawing :—

STATEMENT BY THE CANDIDATE.

The accompanying drawing, made by me this day, without referring to any document, and without the assistance of any person, is intended by me to be sufficient for the new construction of the parts above described to fit the places of similar parts which are to be removed. The construction is similar to what I have been with in the _____ steamer _____, but the dimensions may be different.*

The diameter of the cylinder is _____

The stroke of the piston is _____

The stroke of the valve is _____

The cover at top end on steam side is _____

The cover at bottom end on steam side is _____

The lead at top is intended to be _____

The lead at bottom is intended to be _____

The inside cover is _____

The thickness of the face of valve is _____

The thickness of the body of valve is _____

The greatest opening for steam will be _____

That gives an area equal to one _____

The opening for exhaust when the crank is on the top centre is _____

That gives an area equal to _____th of piston.

The length of the connecting rod is _____

The valve will cut off steam on the down stroke at _____

The valve will cut off steam on the up stroke at _____

The Candidate may omit this part if he chooses.

The parts fully dimensioned, in ink, are _____

Dated at _____

this _____ day of _____ 19 .

_____ Applicant.

APPENDIX D.

READING THE WATER-GAUGES.

NOTWITHSTANDING that the reading of the water-gauge is made a special feature in the examination of engineers, many boiler casualties result from the engineer of the watch either not understanding the construction of the water-gauge fittings or not satisfying himself by actual trial that the cocks, pipes, &c., are clear.

In one case, two furnace crowns came down in a steamer that was just starting on a voyage. The engineers were satisfied that there was plenty of water in the boiler because the water-gauge showed full glass, and they called the attention of a Board of Trade Surveyor to this fact as being conclusive evidence that the casualty could not have resulted from shortness of water On examination of the fittings, however, it was found that the cock between the boiler and the steam pipe leading to the gauge was shut, having been carelessly left in that position on the previous day when the mountings were overhauled for survey. Directly the cock was opened the water disappeared from the gauge-glass, and the second engineer admitted that he had blown down the boiler in order to lower the water level, as the glass was full.

* Run the pen through the words that do not apply.

Many steamers have had their furnaces brought down at sea in a similar manner to the above through what the engineers of the watch have called "false water in the glass,' and which on examination has been found to result from the top communication being chocked.

These casualties resulted from what, to say the least, was bad management, not false water.

Unless a candinate under examination is able to prove that he understands how to verify the indications of the water-gauge, he should not be passed in practical knowledge, and, as failure in practical knowledge involves the candidate going to sea for another three months before being eligible for re-examination, the examiner should explain to such candidate his error, after failing him, in order to prevent further casualities resulting from his want of knowledge on this subject.

The sketches, Figures 1, 2, 3, 4, and 5, Plate I, represent the usual methods of attaching water-gauge mountings to marine boilers. The important features in each gauge and the method of verifying its indications are dealt with separately in the following remarks:—

Plate I.

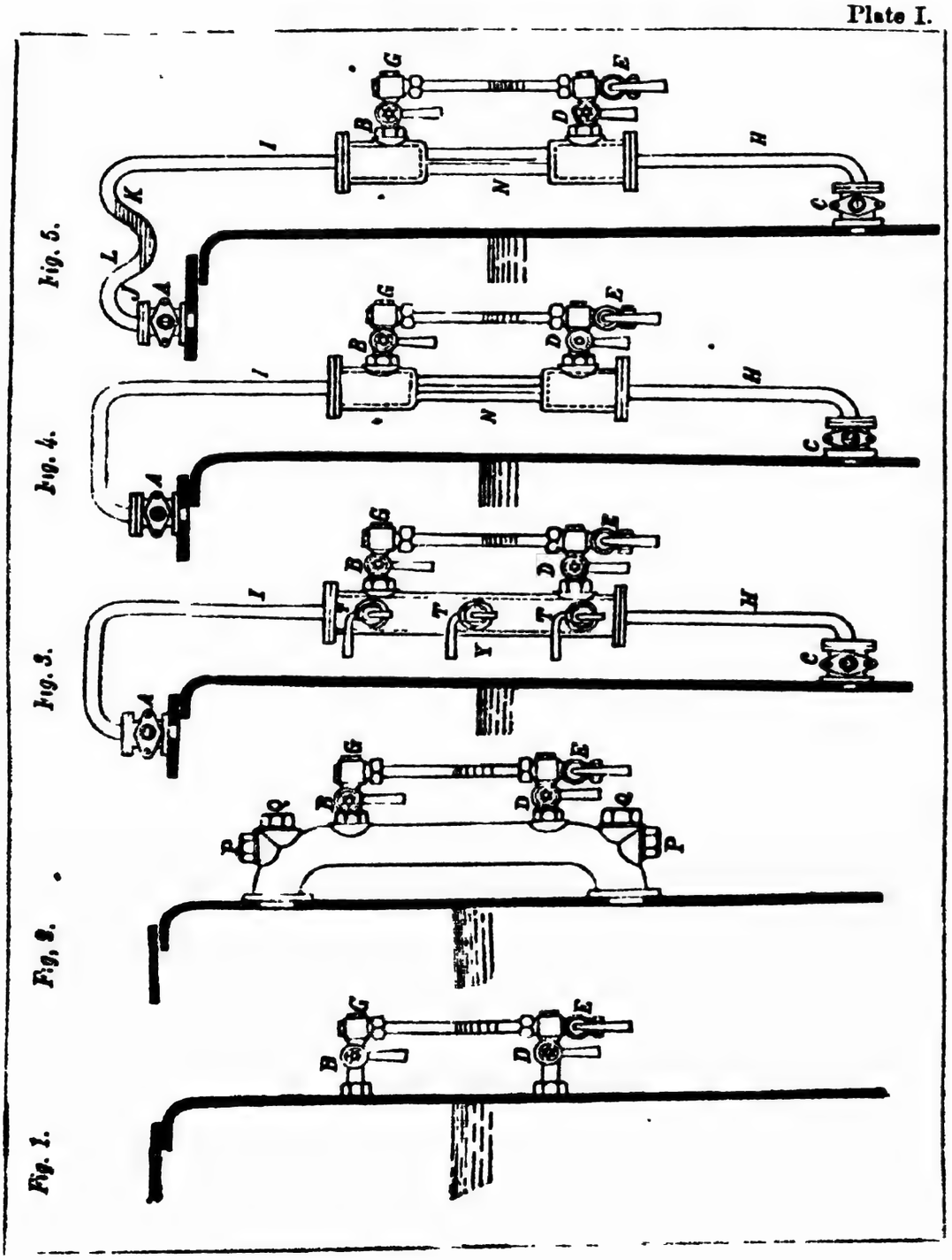

REFERRING TO FIGURE 1 ONLY.

In this case the water gauge cocks are attached direct to the boiler, and the accuracy of the gauge when the boiler is under steam can be tested as follows :—

First.—Let B remain open, then close cock D and open cock E, and if steam issues it proves that cock B and the passage through the top fitting and gauge glass are clear. If no steam or water issues, either cock B or the passage through the top fitting and gauge glass is choked and the gauge cannot act properly until the obstruction is removed.

Second.—Close cock B and open D and E, and if water issues, cock D is clear. If no water or steam issues, either cock D or the passage from the boiler through the lower fitting is choked and must be cleared before the gauge can act properly.

REFERRING TO FIGURE 2 ONLY.

In this case the gauge cocks are attached to a bent pipe of comparatively large diameter (at least 3 inches in the bore), the upper end of which communicates with the steam space, and the lower end with the water space of the boiler. Owing to the bore of the pipe being large it is not liable to become choked or stopped under the ordinary conditions of working. The water-gauge is, therefore, in practically the same condition as if it were attached direct to the boiler, as in Figure 1. This gauge, when at work, is tested in precisely the same manner as the one shown in figure 1.

Screw plugs are inserted at PP and QQ, by the removal of which the apertures in the pipe can be cleared, if necessary, by the insertion of a wire or rod when steam is down.

REFERRING TO FIGURE 3 ONLY.

In this gauge there is an open communication from A to C through the column Y, and in order to "blow through the *glass*" it is only necessary to shut cocks D and B alternately, keeping E open. But to "blow through the *water-gauge*," including the pipes H and I, it is necessary, after blowing through the glass as described above, to shut A and C alternately, at the same time keeping B, D and E open for such time as will ensure the complete discharge of the contents of the gauge and its connections. When B, D and C are clear and A choked, the steam lodging in the glass and in the pipe I leading from column Y to A becomes condensed, and the water flowing through C to take its place rises in column Y and in the glass to a level above that of the water in the boiler. In other words, the gauge shows a false level. If now E be opened and water is blown out, then on E being again closed the water in the gauge will rise higher than before and be still further misleading. On the other hand, when B, D and A are clear and C choked, the water, if any, in the glass is trapped and no longer rises and falls with the water in the boiler or with the motion of the vessel; it, however, slowly rises in the glass owing to the condensation of the steam in the upper part of the gauge until such time as E is opened when the whole of the water in the glass is blown out, and on E being closed the glass does not show any water notwithstanding that the water in the boiler may be at the proper level. When the test cocks T T T are attached to column Y, as shown in Figure 3, they cease to be reliable when either cock A or C or the pipe in connection therewith is choked, or nearly choked.

REFERRING TO FIGURE 4 ONLY.

Sometimes the water-gauge fittings are arranged as shown in Figures 4 and 5, with no passage up the column, the central portion (N) of the column being simply a pillar or connecting piece of any convenient section between the upper and lower portions to which the cocks B and D are attached.

By this arrangement double communications are obviated and there is no need for what is known as "double shut off" in testing the accuracy of the gauge. When, however, the gauges are constructed in this manner the cocks B and D are unreliable as test cocks in the event of there being no glass in the gauge. This feature should be carefully noted. Moreover, when in working condition the reduction of pressure in the glass which arises when E is opened causes the water in pipe H to rise above its normal level. This objectionable feature should also be noted.

REFERRING TO FIGURE 5 ONLY.

Sometimes there is a bend, L, in the steam pipe I leading from cock A to cock B. This has occasionally escaped observation when new boilers have been fitted on board ship. In most cases this bend arises from the pipe being led in an abnormal direction to escape other pipes, beams or fittings near the smoke box. With such a bend the condensed steam collects in the pipe and falls to the bottom of the bend, and in time it completely fills the pipe from J to K. The steam from K down to the level of the water in the glass is thereby trapped and, as condensation proceeds, leads to a reduction of pressure in the pipe below that of the boiler and an equivalent rise of the water in the bend and also in the gauge-glass. When the vessel is quiescent the water in the gauge-glass increases in height until cock E is opened or until the pressure in the boiler is so much in excess of that in the lower part of pipe I as to cause the water in the bend to be blown into the gauge glass. In either case instantaneous change of water level ensues.

In the ordinary course of working the phenomenon described above is more or less modified by the presence of air in the upper part of the gauge and by the rise and fall of the water in the boiler and gauge-glass arising from the rolling or pitching motions of the vessel.

OTHER SPECIAL POINTS TO BE NOTED.

When the cocks A and C are omitted, as in Figure 2, it is owing to the bore of the standpipe being sufficiently large to enable it to be regarded as part of the boiler. Such pipes require, however, to be examined and cleared at intervals by passing a rod through the holes provided for the purpose at PP and QQ.

Cocks at A and C are not necessary for the testing of gauges arranged as shown in Figures 4 and 5. Examiners ought, however, to make sure that candidates are aware of the impossibility of testing the reliability of the indications of water-gauges arranged as in Figure 3 when the cocks A and C are absent and of the effect which the choking of cock A or C, or pipe H or I has on the indications of the test cocks T T T attached to column Y.

Probably more than half the steamers afloat are fitted with water-gauges as shown in Figures 3 and 4, and it is therefore specially important that engineer candidates should thoroughly understand their construction, the principle on which they act, and the steps which must be taken to keep them in an efficient condition.

When fitting a gauge-glass into its place it is specially important that it should not be placed so high as to prevent a clearing rod being inserted at G, figures 1, 2, 3, 4 and 5. This defect, especially if it occurs in a water-gauge attached to a boiler subject to priming, permits a rapid accumulation of scum around the top of the glass and results in the choking of the orifice leading from cock B to the gauge-glass in each of the figures.

When a gauge-glass is too short or is placed either too high or too low in the fittings, it is also liable to become choked by the packing material being forced over its ends by the glands whilst being screwed up.

The use of unsuitable or insecure internal pipes in connection with either the ordinary gauge-glass cocks of the description shown in Figure 1, or with test cocks which are joined to the boiler itself, should also be carefully guarded against.

Boiler casualties have resulted from the cocks B and D having the parts wrongly placed as shown in Figure 6, Plate II. In one case of that kind which forms the subject of Report No. 208 under the Boiler Explosions Acts, the engineer in testing the water-gauge omitted to see that the passages in the cocks B and D were clear *when the handles were in their proper working position.* This defect could easily have been discovered if proper attention had been paid to the condition of the cocks. A defect of this nature may be due to faulty construction originally, or to the handle of the cock having been overstrained, and the neck twisted. Whether the passages in the plugs are fair and clear can, however, be verified in a few minutes. As an illustration, the water cock D, Figure 6, Plate II, can be verified by blowing through E with B shut and then moving the handle of D to one side until it is just closed, and then to the other side until it is again just closed; the proper working position of the handle is about equally distant from each of the above positions. The other cocks can be verified in the same manner.

Another serious casualty occurred through the handle of the cock A, Figure 3 having been twisted from its original position relatively to the orifice of the cock, resulting in the cock being shut when apparently open.

When a water-gauge, that is clear in all its parts, has been thoroughly blown through, the water in the glass rises above the level at which it formerly stood, immediately the drain cock E is closed, but if left undisturbed for a time it gradually falls to its former position. The amount of rise which occurs on these occasions depends chiefly on the temperature of the contents of the boiler and on the length of the pipes by which column Y is connected top and bottom to the boiler, but in cases where the gauge is of the description illustrated in Figures 3, 4 and 5, it amounts in high pressure boilers to about 4 inches, while the time occupied by the water in returning to its former level ranges from 30 to 40 minutes. The cause of this rise is twofold, namely (*a*) the displacement of the comparatively cold water in pipe H by hotter and proportionately lighter water from the boiler, and (*b*) a slight condensation of the steam and a correspondig fractional reduction of pressure in pipe I. The cause of the gradual subsidence of the water in the glass to its former level is also of a dual chararacter, namely (*a*) the cooling of the water in pipe H, and (*b*) the diminution in the condensation of steam in pipe I owing to the collection therein of air released from the steam condensed.

These results will, however, be somewhat modified if the water in the boiler is of higher density than in pipe H, and this will nearly always be the case owing to the condensation of the steam in the glass and upper fittings of the water-gauge, causing the water in the lower part to be fresher than that in the boiler.

The examiner should impress upon candidates the necessity for periodically blowing through the water-gauge on each boiler (no matter what the form may be) in a systematic and thorough manner, and, in cases where a boiler is fitted with two water-gauges, of keeping both in constant use; finally, he should further impress upon them the necessity for keeping the water-gauges well lighted, clean, and in all respects efficient.

Plate II.

Fig 6.

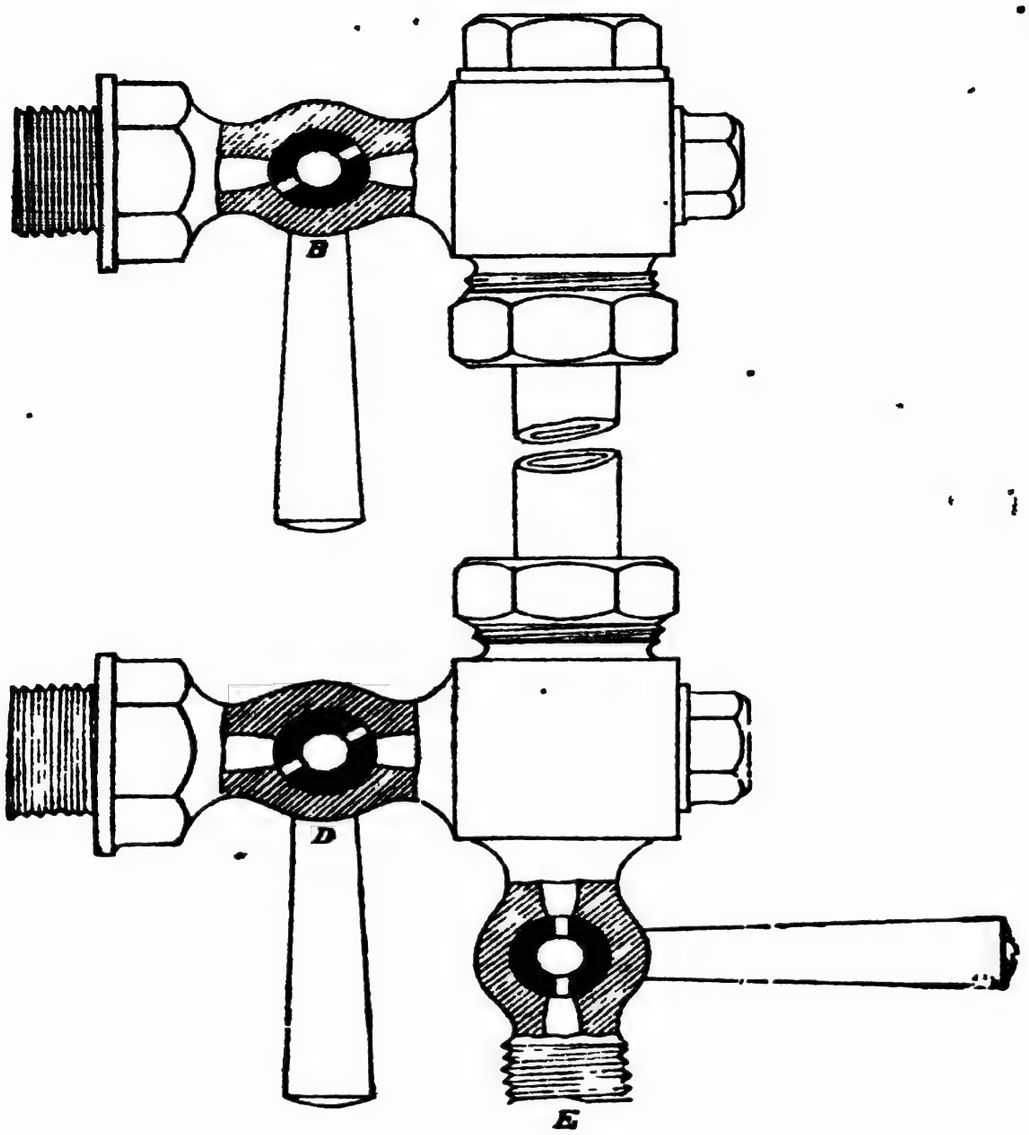

APPENDIX E.

EXAMINATION OF MASTERS AND MATES IN STEAM.

These examinations are provided for the purpose of giving Masters and Mates who are possessed of Certificates of Competency an opportunity of undergoing a voluntary examination as to their practical knowledge of the use and working of the steam engine. The examiners are appointed by Government.

The examination is open to any person who holds a Certificate of any grade in the Foreign or Home trade or as Master of his own pleasure yacht. Candidates should fill up the form of application, Form Exn. 2, at the Port Office, pay the fee of Rs. 15, and deposit their Certificates with the Port Officer, who will inform the applicant when and where to attend to be examined. If the candidate fails to pass his Certificate will be at once returned to him.

If he passes, the report (Exn. 15) will be sent to the Port Officer, and the Certificate, together with the Form Exn. 2, will be sent to the Government; the words "Certified to have passed in steam," with the date and place of examination, will then be entered on the Certificate and its counterpart, and the Certificate will be sent to the Superintendent

of the Mercantile Marine Office of the port named in the Form Exn. 2, and be delivered to the candidate in the usual manner.

If a candidate fails he may not present himself for re-examination until the expiration of three months from the date of failure.

The examination is for the most part *viva voce*, and extends to a general knowledge of the practical use and working of the steam engine, and of the various valves, fittings, and pieces of machinery connected with it; and of the way in which electric lighting is carried out on board ship. Theoretical questions on calculations of horse-power or areas of cylinders and valves or any of the more difficult questions relating to steam engines and boilers will not be asked.

Examiners are to satisfy themselves that the candidates know the names and understand the uses of the various parts of engines and boilers, and their connecting pipes, valves, cocks, &c. Practical knowledge, as distinguished from theories and abstruse calculations, is to be the test of the candidate's fitness to have his Certificate endorsed.

The examiner should arrange to conduct part of the examination in the engine room of a steamship, unless from circumstances he finds it impossible to do so; but in the event of the candidate passing, the examiner should state in writing what circumstances prevented a visit to an engine room. If an opportunity offer, the candidate should be permitted, under the guidance of the examiner, to start and stop the engine of some vessel which may have her steam up.

The examiner, in sending in his report of the examination, should state where the examination has been held.

Candidates will be required to give written answers to sixteen out of twenty questions taken from the Elementary Questions printed in Appendix B. These questions will be altered from time to time without notice. The twenty questions are not to be difficult, theoritical, or book question, but are to be such as any man of ordinary capacity, who has any practical knowledge of the use and working of the steam engine, ought to answer.

If a candidate refers to any book or paper or memorandum, or obtains information from another candidate during the examination, he will be treated as having failed, will forfeit his fee, and will not be allowed to be re-examined for a period of three months.

The examiners will report in the case of failure, the nature of the question or questions that decided the failure, or the point in the managment of the engine in which the candidate was deficient.

There is nothing in the regulations requiring that applicants for the voluntary examination shall have served on board steamships; all that is required is that they shall have a practical knowledge of the use and working of the steam-engine. Examiners will not fail to appreciate the fact that practical knowledge is best gained in the engine room; and the examination of an officer who does not produce official evidence of service in steamships, and of experience of engines, must necessarily be more searching than in the case of one who produces evidence of such service and experience.

Examiners will require all candidates to fill up a Form Exn. 15 (*b*), and they will forward it to the Port Officer with the report of the examination.

Masters and Mates may cancel questions A, B, and C, but they should fill up the form for questions D, E, F, and G, as evidence of their practical knowledge.

A candidate for this examination is required to have a thorough grasp of the construction of the steam-engine and boiler, to enable him, in the first place, to understand the nature and importace of any defect which may be reported to him by the Chief Engineer, and so that he may work in harmony with him in affording time and facilities for disconnexions, inspections, adjustments, and repairs.

To have a looking-on knowledge of what the principal repairs are about engines and boilers and pipes, and how these repairs are accomplished.

To be able to form an independent opinion as to a breakdown, and the consequent propriety or impropriety of proceeding under steam with temporarily repaired or defective machinery.

To understand how to estimate approximately the reduction of fuel required for reduced speed, and consequently to sanction such reduction of speed as may seem to him to be warranted by the report of the Chief Engineer, and to satisfy himself before leaving port that there is sufficient coal for the voyage.

To have an intelligent grasp of the general run of pipes and connexions in the engine-room, the marking of cocks, the opening and closing of cocks and valves, how mistakes of importance may be made in the confusion of an accident and how best to guard against such mistakes.

To be capable of being left in charge of the feeding of a set of boilers, to understand the working of the water-gauge, and to be able to guard against being misled by false indications of the gauge glass.

To understand about blowing down and surfacing, the reasons for doing so, and the danger which may result from the neglect of these under certain circumstances.

A master or mate presenting himself for examination in steam must be understood to have made up for his want of practical experience by reading up about the steam-engine. He ought, therefore, to show that he has given his mind to intelligently understanding the *rationale* of the action of the steam-engine. Under this head he should, therefore, be able to state approximately the quantity of heat required in the formation of steam, the remarkable relation of "latent" heat to "sensible" heat, how much steam can be raised by the combustion of one pound of coal, what horse-power measure is, what indicated horse-power is, what is the action of the slide-valve, the course of the steam through the engine, and the advantage of working expansively, and how the expansive action is shown by the indicator diagram. To know the uses of the various parts of the engines and dynamos used for electric lighting, and how they and the cables are fitted in the hull; how wires are jointed, insulated, and cased; why it is desirable that they should be led along places which are dry and accessible; what is "sparking," and what are the causes which produce it; what is its danger in coal bunkers and petroleum-carrying steamers; what are the uses of switches and cut-outs, and why is it so important to prevent short-circuiting taking place.

The candidate has to answer in writing 16 out of 20 questions selected from the Elementary Questions (*see* Appendix B).

Selections for this examination are given on the alphabetic sheet for "Steam." Generally, these answers are given by candidates as learned by rote from a book; the candidate should therefore be asked such *viva voce* questions as will necessitate his giving his answers in different words, so as to discover whether he has the root of the matter in him

The principal part of the *viva voce* is the examination on board a steamer, preferably one with which he is unacquainted. He is told to look about and try to find out the run of the machinery without the assistance of anyone: the examiner to be in the engine-room to see that this independent examination is properly carried out. When the candidate reports that he thinks he knows the whole arrangement of the machinery, the Examiner will then question him on the uses of the parts, get him to point out the different cylinders, pumps, valves, condenser, &c.; also the dynamo, its field-magnets, armature, commutators, brushes, cables, &c. He must show that he understands the run of the pipes in the bilges, not necessarily that he has gone over every one of them, but he ought to be directed to trace, at least, one important range of pipes and to thoroughly satisfy the examiner that he could be safely trusted to manipulate the

valves or cocks in connexion therewith. It will not often be practicable for the candidate to be asked to actually work engines under steam, but he must satisfy the examiner that he knows how to do so, and that he is aware what precautions have to be taken in regard to water in the cylinder, &c. It is most important that a candidate should show that, in the event of an accident depriving him of the assistance of engineers, he knows what to do to safely take his vessel to an anchorage, or to stop the engines and proceed under sail alone

The examination of a mate in steam is the same as that of a master. The knowledge required has no reference to the mate's position. A mate may be examined, but such examination implies that the mate will one day be a master, when the possession of the knowledge will be an advantage to him in the discharge of his duties as master.

APPENDIX F.

FORMS USED IN THE EXAMINATIONS OF ENGINEERS.

Exn. 1*a*. Regulations.
Exn. 3. Application to be examined.
Exn. 10*d*. Face sheet, Second Class.
Leaves 201, &c., Second Class, 10 A. M. to noon.
Leaves 311, &c., Second Class, 12 to 2.
Leaves 411, &c., Second Class, 2 to 4.
Exn 11*d*. Face sheet, First Class.
Leaves 261, &c., First Class, 10 to 12.
Leaves 361, &c., First Class, 12 to 2.
Leaves 461, &c., First Class, 2 to 4.
Exn. 15*d*. Second Class, data sheet for a set of papers.
Exn. 15*e*. First Class, data sheet for a set of papers. A corner is cut off the First Class papers to prevent mixing the papers accidentally.
Exn. 15*b*. The form for elementary questions used on the second day of the examination by candidates for second class, and on either the second or the third day by candidates for first class. Candidates who have time between working the arithmetical papers on the first day are allowed to go on with the elementary questions on 15*b*. The questions are contained in Exn. 1*a*.
Leaflets. Alphabetical lines of numbers of the elementary questions for first class, second class, and masters and mates in Steam.
Exn 17—*a*, *b*, *c*, &c.
Subjects for examination in rough working drawing.
The candidates bring their own instruments; the office supplies drawing boards, paper and squares.
Exn. 16. Examiner's authority.
Exn. 15. Examiner's Report.
Exn. 37. For reporting the names of Candidates under examination.

APPENDIX G.

Form of Certificate for Indian Coasting Voyages as required by paragraph 29.

*Seaman discharged from*_____ *in a British Possession abroad.*

Name and official number of ship.	Port of registry.	Tonnage.	Description of voyage or employment.*
1		2	3

Name of seaman.	Place of birth.	Date of birth.	No. of fund ticket (if any.)	Capacity.	Date of entry.	Date of discharge.	Place of discharge.
1	2	3	4	5	6	7	8

		Date of sailing from Home Port.	Date of arrival at Home Port.
Character for conduct.	Character for ability.		

I certify that the above particulars are correct, and that the aforenamed seaman was discharged accordingly.

Dated this _____ day of _____ 19__.

_____ Seaman _____ Master.

* Such as—Coasting.—Calcutta to Bombay and back to Calcutta.
Coasting.—Bombay to Madras.

BENGAL.

Government of Bengal.

By the Honourable the Lieutenant-Governor of Bengal.

In accordance with Her Late Majesty's Order in Council of the 29th June 1882, issued under section 3 of the Merchant Shipping (Colonial) Act, 1869.

Colonial Certificate of Competency

AS

FIRST CLASS ENGINEER.

To _____

Whereas *it has been reported to the Lieutenant-Governor that you have been found duly qualified to fulfil the duties of FIRST CLASS ENGINEER in the Merchant Service, I do hereby, in pursuance of Act VII of 1884, grant you this Certificate of Competency.*

By order of the Government of Bengal

this _____ day of _____ 19 .

Assistant Secy. to the Govt. of Bengal.

BENGAL.

No. of Certificate [redacted]

Address of Owner _____

Date and place of Birth _____

Signature _____

This Certificate is given upon an ORDINARY EXAMINATION passed at _____ on the _____ day of _____ 19 .

Any ENGINEER who fails to deliver up a Certificate which has been cancelled or suspended is liable to a penalty not exceeding Rs. 500.

This Certificate is liable to be cancelled or suspended by any Court or Tribunal which has power under the Merchant Shipping Act, 1894 (57 and 58 Vict. ch. 60), sec. 478 (5), to cancel or suspend Certificates.

N.B.—Any person other than the owner thereof becoming possessed of this Certificate is required to transmit it forthwith to the Port Officer, Calcutta.

Issued at the Port of Calcutta on the _____ day of _____ 19 .

Registered,

Port Officer of Calcutta.

BENGAL.

Government of Bengal.

By the Honorable the Lieutenant-Governor of Bengal.

In accordance with Her Late Majesty's Order in Council of the 29th June 1882, issued under section 8 of the Merchant Shipping (Colonial) Act, 1869.

Colonial Certificate of Competency

AS

SECOND CLASS ENGINEER.

To_____

Whereas *it has been reported to the Lieutenant-Governor that you have been found duly qualified to fulfil the duties of SECOND CLASS ENGINEER in the Merchant Service, I do hereby, in pursuance of Act VII of 1884, grant you this Certificate of Competency.*

By order of the Government of Bengal

this _____ day of _____ 19__.

Assistant Secy. to the Govt. of Bengal.

BENGAL.

No. of Certificate

*Address of Owner*_____

Date and place of Birth _____

Signature _____

This Certificate is given upon an ORDINARY EXAMINATION passed at _____ on the _____ day of _____ 19__.

Any ENGINEER who fails to deliver up a Certificate which has been cancelled or suspended is liable to a penalty not exceeding Rs. 500.

This Certificate is liable to be cancelled or suspended by any Court or Tribunal which has power under the Merchant Shipping Act, 1894, (57 and 58 Vict. ch. 60), sec. 478 (5), to cancel or suspended Certificates.

N B.—Any person other than the owner thereof becoming possessed of this Certificate is required to transmit it forthwith to the Port Officer, Calcutta.

Issued at the Port of Calcutta on the _____ day of _____ 19__.

Registered.

Port Officer of Calcutta.

The 6th April 1905.

No. 45Marine.—This Department Notification No. 34Marine, dated the 20th March 1905, granting three months' privilege leave to Mr. J. H. Lindquist, Senior Master Pilot, with effect from 15th April 1905, is hereby cancelled.

W. A. INGLIS,
Secy. to the Govt. of Bengal.

The 10th April 1905.

No 47Marine.—Mr. G. F. Thorpe, Senior Master Pilot, is granted privilege leave for one month and twenty-five days, under article 260 of the Civil Service Regulations, with effect from the forenoon of 9th April 1905.

W. A. INGLIS,
Secy. to the Govt. of Bengal.

The 11th April 1905.

No. 48Marine.—It is hereby notified for general information that the regulations for the prevention of the introduction of plague by sea, which were imposed in the ports of Orissa and Chittagong against vessels arriving from Mauritius, are hereby withdrawn.

W. A. INGLIS,
Secy. to the Govt. of Bengal.

RAILWAY DEPARTMENT.

The 11th April 1905.

No. 20R.—Notification.—With reference to clause 18 of this Department Notification No. 75R., dated the 7th April 1902, published at pages 491-96, Part I of the *Calcutta Gazette* of the 9th idem, and in exercise of the powers conferred by section 6 of the Bengal Tramways Act, No. III of 1883, the Government of Bengal is pleased to sanction an increase in the speed of trains on the Autpur extension of the Howrah-Amta Light Railway, viz, from Jagatbullabpur to Autpur within the limit of 12 miles an hour as the maximum.

W. A. INGLIS,
Secy. to the Govt. of Bengal.

PUBLIC WORKS DEPARTMENT.

The 8th April 1905.

Corrigendum No. 89.—In Bengal Government Notification No. 62, dated 11th March 1905, *for* afternoon of the 26th February 1905, *read* forenoon of 26th February 1905.

ESTABLISHMENT.

The 10th April 1905.

No. 90.—The following promotions are made in the Upper Subordinate Establishment with effect from the 14th February 1905:—

NAME.	From—	To—	Nature of promotion.	Division or Circle in which employed.
Hefferman, A E. ...	Supervisor, 1st grade	Sub-Engineer, 3rd grade	Permanent ...	Balasore.
Pal, Anango Mohon ...	,, 2nd ,,	Supervisor, 1st grade	Ditto ...	Bhagalpur Circle.
Mitter, Saroda Charn ...	,, 1st ,, temporary rank.	Ditto ...	Ditto ...	1st Calcutta.
Talapatra, Jadub Chandra	Supervisor, 2nd grade, temporary rank.	Supervisor, 2nd grade	Ditto ...	Chota Nagpur.
Chatterjee, Mohit Kumar	Ditto ...	Ditto ...	Ditto ...	Nadia Rivers.
Sanyal, Chitta Sukh ...	Ditto ...	Ditto ...	Ditto ...	2nd Calcutta

W. A. INGLIS,
Chief Engineer, Bengal.

ESTABLISHMENT.

The 11th April 1905.

No. 91.—Sheikh Gholam Rahman, Supervisor, first grade, 1st Calcutta Division, is granted privilege leave for three months, under article 260 of the Civil Service Regulations, with effect from the 19th April 1905, or such subsequent date as he may avail himself of it.

M. J. SCOBIE,
Offg. Chief Engineer.

SUBORDINATE CIVIL SERVICE.

No. 2817A.

No. 2710A.—The 8th April 1905.—The following confirmations and promotions are sanctioned in the Subordinate Civil Service under the late system, pending the reorganization of that service :—

Confirmed in the first grade (Rs. 200).

Babu Hemanto Kumar Moitra.

Promoted substantively pro tempore *to the first grade (Rs. 200).*

Babu Kedarnath Banerjee.
„ Sarat Chunder Mookerjee.
„ Saroda Nunda Das.

Confirmed in the second grade (Rs. 175).

Babu Surendra Nath Sarkar.
„ Rajmohan Gangopadhyay.
„ Joges Chunder Dutt.

Promoted substantively pro tempore *to the second grade (Rs. 175).*

Babu Monmohan Mukherjee.
„ Jogindro Nath Pal.
„ Mohit Chandra Ghose.
„ Gour Syam Mahanti.
„ Uma Charan Roy Chowdhry.
Maulvi Muhamad Abdul Momen, but seconded while on deputation.
Babu Baij Nath Sahai (No. I).
„ Nirad Krishna Ray
„ Sisir Kumar Chatterjee.
„ Kandji Sahay.
„ Chhabi Lall Singh.
„ Abani Chundra Chatterjea.
„ Rampada Chatterjee.
Maulvi Abdul Bari.
Babu Baij Nath Sahai (No. II).
„ Hiranya Kumar Das Gupta.
„ Jharkandi Lal.

Confirmed in the third grade (Rs. 150).

Babu Chhabi Lall Singh.
„ Abani Chundra Chatterjea.
„ Rampada Chatterjee.

Promoted substantively pro tempore *to the third grade (Rs. 150).*

Babu Hari Das Roy.
Maulvi Anwar Karim.
Babu Chandra Kumar Mathur.
„ Chunder Sikhar Mukerjee.
„ Kunja Lal Ghose.
„ Ananta Mohan Ray.
„ Sakhi Chand.
„ Tarini Prasad Varma.
„ Surjya Kumar Guha.
„ Madhab Chandra Misra.
„ Jyotish Chandra Roy.
„ Ambu Nath Chatterjee.
„ Jatindra Mohan Chattopadhyaya.
„ Mohendra Nath Gupta.
„ Pulin Behari Bose.
Maulvi Ahmed Ali.

Confirmed in the fourth grade (Rs. 100).

Babu Chandra Kumar Mathur.

No. 39A.D.—The 11th April 1905.—Babu Sushil Chandra Ghose, B.A., is appointed substantively *pro tempore* to the fourth grade of Sub-Deputy Collectors (on Rs. 100), and is posted to the Presidency Division. He is vested with the powers of a Magistrate of the third class.

Presidency Divn.

R. W. CARLYLE,
Offg. Chief Secy. to the Govt. of Bengal.

JAIL DEPARTMENT.

No. 3797, dated Calcutta, the 5th April 1905.—Major D. M. Moir, I.M.S., made over charge of the Chapra Jail to Assistant Surgeon Chandra Kanto Chakravarty on the afternoon of the 24th March 1905.

No. 3798, dated Calcutta, the 5th April 1905.—Dr. Kumar Bhupendra Narayan made over charge of the Pabna Jail to Assistant Surgeon Purna Chunder Singh on the forenoon of the 29th March 1905.

ERRATUM.—*No. 3854, dated Calcutta, the 5th April 1905.*—In the Notification No. 12681, dated the 19th December 1904, published at page 1859 of the *Calcutta Gazette*, dated the 21st idem, *for* "forenoon of the 10th December 1904" *read* "afternoon of the 10th December 1904."

W. J. BUCHANAN,
Inspector-General of Prisons, Bengal.

CIVIL MEDICAL DEPARTMENT, BENGAL.

No. 4503, dated Calcutta, the 5th April 1905.—Third grade Assistant Surgeon Satis Chandra Mitra, Medical Officer, Eastern Bengal State Railway, at Lalmonirhat, is, on return from leave, appointed to the Gumla subdivision and Dispensary in the Ranchi district, *vice* second grade Assistant Surgeon Bana Mali Roy, transferred.

No. 4507, dated Calcutta, the 5th April 1905.—Second grade Assistant Surgeon Bana Mali Roy, of the Gumla subdivision and Dispensary, in the Ranchi district, is appointed as Medical Officer, Eastern Bengal State Railway, at Lalmonirhat, *vice* third grade Assistant Surgeon Satis Chandra Mitra, transferred.

S. H. BROWNE, M.D., COL., I.M.S.,
Inspector-General of Civil Hospitals, Bengal

Sheriff's Office, the 15th March 1905

NOTICE is hereby given that the Second Criminal Sessions of the year 1905 of the High Court of Judicature at Fort William in Bengal, for the Town of Calcutta and Factory of Fort William, and the places subordinate thereto, will be held at the Court-house, in the Town of Calcutta, on Wednesday, the third day of May next, at 11 o'clock in the forenoon, and thenceforward from day to day until the said Sessions be over. And it is hereby proclaimed that all persons who are to prosecute any of the prisoners to be brought up for trial at the said Sessions be present then and there to prosecute.

E. CABLE, *Sheriff.*

শরিফ আফিস, সন ১৯০৫ সাল তারিখ ১৫ই মার্চ।

সকলকে সমাচার দেওয়া যাইতেছে যে যবে বাঙ্গালার কোর্ট উইলিয়ম দুর্গের অধীন শহর কলিকাতার ও অন্যান্য স্থানের ফৌজদারী বিচার নিষ্পত্তি জন্য আগামী সন ১৯০৫ সালের তরা মে বুধবার বেলা ১১ ঘটিকার সময় এবং যে পর্যন্ত সেশিয়ানের কার্য্য শেষ না হয় প্রতিদিন উক্ত সময়ে কলিকাতার হাইকোর্টের আপন আদালত যবে সন ১৯০৫ সালের দ্বিতীয় ক্রিমিনেল সেশিয়ান বসিবেক এবং এতদ্বারা প্রচার করা যাইতেছে যে, যে সকল ব্যক্তি কোন কয়েদির বিরুদ্ধে ফৌজদারী মিছিল করিবেক তাহারা উক্ত স্থানে উক্ত সময়ে হাজির থাকিয়া মোকদ্দমা করে ইতি।

ই: কেবল, শরিফ।

TREASURY NOTICE.

UNCOVENANTED DEPUTY COLLECTOR BABU RAMA BALLAB MISSER has been placed in charge of the Bhagalpur Treasury and is authorised to draw bills on other Treasuries.

D. J. MACPHERSON, *Commissioner.*

COMMR.'S OFFICE, BHAGALPUR, *the 3rd April 1905.*

BABU JAGO BANDHU BHATTACHARJEE, Deputy Collector, has been placed in charge of the Bankura Treasury, and is hereby authorised to draw bills on other Treasuries, *vice* Babu Nogendra Chandra Sen, transferred.

N. L. BAGCHI, *Personal Asst., for Commr. on tour.*

COMMR'S. OFFICE, BURDWAN DIVN., CHINSURA, *the 10th April 1905.*

EDUCATION DEPARTMENT, BENGAL.

Subordinate Educational Service.

The 31st March 1905.—Babu Basanta Kumar Mitra, B.A., an Assistant Master in the Patna Collegiate School (class VI), is appointed to be an Assistant Master in the Patna Training School, *vice* Babu Revati Nandan, deceased, but he will act as Assistant Head Master of the latter institution, during the absence, on deputation, of Babu Sarat Chandra Brahmachari.

The 7th April 1905.—Pandit Tarini Kanta Vidyanidhi, an Assistant Master in the Pabna Zilla School (class VII), is appointed to act as Assistant Head Master of the same institution, during the absence, on leave, of Babu Akshoy Kumar Mukerji, or until further orders.

Babu Ganga Das Bhattacharjea, B.A., is appointed to act as an Assistant Master in the Pabna Zilla School and in class VIII of the Subordinate Educational Service on a salary of Rs. 37-8 a month, with effect from the date on which he joined the appointment, *vice* Pandit Tarini Kanta Vidyanidhi, on deputation.

Babu Kasi Bhusan Sen, B.A., Deputy Inspector of Schools, Palamau (substantive *pro tempore* in class IV), is appointed to be an Assistant in the office of the Director of Public Instruction on probation for one year

Babu Ramesh Chandra Gupta, M.A., Sub-Inspector of Schools, Sonthal Parganas, (class VII), is appointed to be Deputy Inspector of Schools, Palamau, on probation for one year, *vice* Babu Kasi Bhusan Sen, transferred.

The 8th April 1905.—Babu Priya Nath Roy, B.A., Deputy Inspector of Schools, Calcutta (class III), is allowed leave of absence for twenty days, under article 260 of the Civil Service Regulations, with effect from the 10th April 1905, or any subsequent date on which he may avail himself of it.

Babu Tripura Charan Banerji, B.A., Deputy Inspector of Schoools, 24-Parganas (class II), is allowed leave of absence for three months, under article 260 of the Civil Service Regulations, with effect from the 3rd April 1905, or any subsequent date on which he may avail himself of it.

Babu Satkari Chandra Ghosh, B.A., Additional Deputy Inspector of Schools, 24-Parganas (class III), is appointed to act as Deputy Inspector of Schools, 24-Parganas, during the absence, on leave, of Babu Tripura Charan Banerji, or until further orders.

Babu Srish Chandra Chaudhuri, Sub-Inspector of Schools, 24-Parganas (class V), is appointed, with the consent of the District Board of the 24-Parganas, to act as Additional Deputy Inspector of Schools, 24-Parganas, *vice* Babu Satkari Chandra Ghosh, on deputation.

The following arrangements are sanctioned :—

(1) Babu Siddheswar Ganguli, M.A., Assistant Head Master, Hooghly Collegiate School, and now Officiating Head Master of the same institution (class VI), is appointed to be Assistant Head Master, Malda Zilla School, *vice* Maulvi Elah Nawaz Khan, resigned.

(2) Babu Kali Pada Sarkar, M.A., Deputy Inspector of Schools, Bhagalpur (class III), is appointed to be Assistant Head Master, Hooghly Collegiate School, *vice* Babu Siddheswar Ganguli, transferred.

The 10th April 1905.—Babu Akrur Chandra Sen, Deputy Inspector of Schools, Tippera (class IV), is allowed leave of absence for two months, under article 260 of the Civil Service Regulations, with effect from the 23rd April 1905 or any subsequent date on which he may avail himself of it.

Babu Rama Chandra Das, B.A., Sub-Inspector of Schools, Tippera (class V), is appointed, subject to the consent of the District Board, to act as Deputy Inspector of Schools, Tippera, during the absence, on leave, of Babu Akrur Chandra Sen, or until further orders.

Babu Kedar Nath Mukerji, B.A., Deputy Inspector of Schools, Ranchi (class IV), is allowed leave of absence for one month and-a-half, under article 260 of the Civil Service Regulations, with effect from the 22nd May 1905 or any subsequent date on which he may avail himself of it.

Babu Ram Chandra Banerji, Sub-Inspector of Schools, Ranchi (class VII), is appointed, subject to the consent of the District Board of Ranchi, to act as Deputy Inspector of Schools, Ranchi, during the absence, on leave, of Babu Kedar Nath Mukerji, or until further orders.

The 11th April 1905.—Babu Hari Charan Mukerjea, Sub-Inspector of Schools, Nadia (class V), is appointed, subject to the consent of the District Board of Nadia to act as Deputy Inspector of Schools, Nadia, during the absence, on deputation, of Babu Rakhal Das Chakravarti, or until further orders.

A. PEDLER,
Director of Public Instruction, Bengal.

CALCUTTA UNIVERSITY NOTICE.

IN January 1902, Babu Jogendra Chandra Ghosh, Member of the Senate, offered to place at the disposal of the Calcutta University Government Securities of the nominal value of Rs. 10,000 of the Loan of 1865 for the encouragement of the study of Comparative Indian Law by persons belonging to what is called the Adhyapak class in Bengal, and for the purpose of establishing out of the annual income of the fund of a prize to be awarded to the writer of the best essay on the subject under the following conditions:—

(i) By Comparative Indian Law shall be meant the Hindu Smriti Sastra, called *Vyabahárkhanda* and a comparison of the standard Sanskrit authorities on the subject with British Indian Law as contained in Parliamentary Statutes, Regulations and Acts of the Indian Legislative Councils, and the Law as laid down in Leading Cases The study, which it shall be the object of the Prize to encourage is the History of the Hindu Smriti Sastra as it existed at and from the time when India came under British rule and how and to what extent it has been altered under British influence, regard being had not only to the existing Statutes, Regulations and Acts, but also to those which, having been in operation for a time, have now been repealed or become obsolete, and regard being also had not only to the existing Leading Cases but to cases which were considered Leading at one time, but have now been overruled, and how and to what extent such alteration has affected Hindu Society

(ii) The essay, at the discretion of a Committee consisting of the Vice-Chancellor for the time being of the University, the President of the Faculty of Law and the Principal of the Government Sanskrit College in Calcutta, may deal with the whole of the Indian Comparative Law as before defined or with part or parts thereof; but in no case shall an essay be entitled to competition which in any way attacks the religious beliefs, usages or institutions of His Majesty's subjects. And it shall be in the province and discretion of the said Committee to (*a*) make a detailed programme of studies for the proposed prize, (*b*) name the subject of the essay for any one particular year, and (*c*) decide whether such prize shall be awarded every year or at longer intervals

(iii) By *Adyapak* shall be meant scholars of the Smriti Sastra, students of Smriti in the Government Sanskrit College in Calcutta, and in the tols or indigenous Brahmanical schools which send in candidates for the Title Examinations held in that College and students in other similar institutions in India.

(iv) The essay or essays shall be written either in English or in Bengali; but if any competitor sends in an essay in any vernacular language other than Bengali he shall be bound to furnish an English translation thereof.

(v) The adjudicators for the Prize shall be the Vice-Chancellor of the University, the Chief Justice of Bengal, the President of the Faculty of Law and the Principal of the Sanskrit College in Calcutta. They shall be entitled to consult experts of their own selection to assist them to (*a*) decide whether the essay or essays in competition is or are of sufficient merit to deserve the prize, (*b*) award such prize, (*c*) decide about the number of manuscript copies of each essay to be sent in by the successful competitors, and (*d*) consider the ways and means for the publication of any essay or essays

(vi) The Prize shall be called the "Research Prize in Comparative Indian Law."

The offer was thankfully accepted by the Syndicate at their meeting held on the 8th February, 1902.

The first prize will be awarded in January 1906.

The value of the prize will be Rs 1,000.

The subject for the year 1906 will be—

Discuss the theory of adoption as expounded by the Hindu Smriti Sastras, and compare the Law regarding the adoption of an only son therein contained with the decision of the Privy Council and of the different High Courts and other Courts in British India on that subject.

Candidates are required to send their essays to the Registrar, Calcutta University, on or before the 1st day of July, 1905.

SENATE HOUSE;
The 5th April 1905.

K. C. BANURJI,
Registrar, Calcutta University.

ENGLISH TEACHERSHIP EXAMINATION, 1905.

THE following candidates have passed:—

First grade.
(In order of merit.)

		Centre.
1.	Jagadish Chandra Sen Gupta, B.A.	Calcutta.
2.	Banwari Lal Pal	Ditto.
3.	Mathura Nath Mandal, B.A.	Ditto.

Second grade.
(In order of merit)

4.	Hari Charan Mukerjee	Calcutta.
5.	Upendra Nath Banerjee	Ditto.

CALCUTTA,
The 11th April 1905.

V. H. JACKSON,
Asst. Director of Public Instruction, Bengal.

CIVIL ENGINEERING COLLEGE, SIBPUR.

ENGINEER DEPARTMENT.

SESSION 1905-1906.

CANDIDATES for admission to the Engineer Department should apply to the Principal in the prescribed form on or before the 15th May 1905. Each application must be accompanied by a registration fee of Re. 1.

The session begins on Monday, the 5th June 1905.

Candidates must furnish proof that they have passed one of the following tests:—

(1) The B.A. Examination in the B course in Physics and Chemistry of the Calcutta University. The candidate's age must be under 23 years.
(2) The F.A. Examination of the Calcutta and Madras Universities.
(3) The Intermediate Examination of Allahabad and Punjab Universities.
(4) The Intermediate Examination for the degree of B.A. of Bombay University.
(5) The High School Examination for Europeans and Eurasians.

The candidate's age in (2), (3), (4) and (5) must be under 21 years.

In selecting candidates who have passed the F.A. (all other things being equal), preference will be given to those who have passed in Sanitary Science in addition to the ordinary subjects of the F.A. Examination.

The maximum number to be admitted is limited to 40. The position in the University examination and the age of the candidate will be taken into consideration when selection is made, and such selection will be made by the Principal.

The tuition fee for students to the Engineer class is Rs. 10 a month for each month of the year, vacation included.

Ten scholarships will be awarded to students entering the Engineer Department not being already holders of junior or senior scholarships. Two of these will be reserved for Europeans and Eurasians. Every applicant, before admission to the College, will be examined by the College Surgeon as to his physical strength, fitness for manual labour and eyesight.

Form of application for admission and any further particulars will be supplied upon application.

SIBPUR,
The 8th April 1905.

A. MACDONELL,
Offg. Principal, Civil Engineering College, Sibpur.

CIVIL ENGINEERING COLLEGE, SIBPUR.

APPRENTICE DEPARTMENT.

SESSION 1905-1906.

CANDIDATES for admission to the Apprentice Department should apply to the Principal in the prescribed form on or before the 6th May 1905. Each application must be accompanied by a registration fee of Re. 1.

The session begins on Monday, the 5th June 1905. Candidates must furnish proof that they have passed one of the following tests:—

(1) Standard VII or Middle School Examination of the Code of European Schools.
(2) University Entrance Examination.

The candidate's age must be at least fifteen and not more than seventeen years.

There are forty-five vacancies for natives and nine for Europeans and Eurasians. The selection of candidates for admission will be made by the Principal.

There is one vacancy on the free list for Christian Apprentices in June next and there are three on the reduced fee list. For natives there are five vacancies on the reduced fee list, and six more will become vacant during the month of June. Election to these lists will be made by the Board of Visitors. Forms to be filled up for the consideration of the Board can be had on application to the Principal.

Every applicant before admission to the College will be examined by the College Surgeon as to his physical strength, fitness for manual labour and eyesight.

Before an applicant is admitted to the College his parent or guardian must sign an agreement in the prescribed form.

All applications from Christian candidates for admission to the free or reduced fee lists must reach the Principal not later than 6th May, so as to enable the elections to be made by the Board of Visitors before the opening of the session.

The vacancies on the native list will be filled up after the opening of the session from those apprentices who have joined the College after admission. Forms of application for admission and further particulars will be supplied on application.

SIBPUR,
The 8th April 1905

A. MACDONELL,
Offg. Principal, Civil Engineering College, Sibpur.

VERNACULAR MASTERSHIP EXAMINATION, 1905.

Presidency, Burdwan, Dacca, Chittagong, and Rajshahi Divisions.

THE undermentioned candidates have passed the Examination:—

FIRST GRADE.

High.

(In order of merit.)

No.	NAME		Age.	Training School.	
1	Subal Chandra De*	...	24-0	Chittagong Training School.	
2-3	Pitambar Nath*	...	19-0	Dacca	ditto.
	Bamandas Banerji*	...	19-0	Calcutta	ditto.
4	Mukunda Chandra Raix	...	18-0	Do.	ditto.
5	Nibaran Chandra Sanyal	...	14-7	Rangpur	ditto.
6	Janaki Nath Hati	...	20-0	Calcutta	ditto.
7-8	Surendra Kumar Das*	...	16-0	Dacca	ditto.
	Duryodhan Barua	...	21-6	Chittagong	ditto.
9	Baranasi Bhattacharjya*	...	17-5	Hooghly	ditto.
10	Phelaram Banerji	...	16-8	Do.	ditto.
11	Giris Chandra Pal	...	20-0	Chittagong	ditto.
12	Nibaran Chandra Pal	...	18-5	Hooghly	ditto.
13	Sarvadas Acharya*	...	16-5	Do.	ditto.
14	Chandi Charan Ta	...	17-0	Calcutta	ditto.
15	Makhan Lal Das	...	17-5	Rangpur	ditto.
16	Jatindra Nath Ray Chaudhuri.		18-0	Calcutta	ditto.
17	Chinta Mani Panda	...	16-0	Do	ditto.
18	Ras Bihari Ray*	..	14-0	Dacca	ditto.
19	Mukunda Chandra Gautam		18-0	Hooghly	ditto.
20	Sripati Mohan Banerji	...	17-5	Do	ditto.
21	Mahendra Nath Das	...	19-8	Rangpur	ditto.
22	Mahendra Lal Nandi*†	...	20-9	Chittagong	ditto.
23	Ramapati Mukherji	...	21-8	Hooghly	ditto.
24	Satis Chandra Purkait	...	18-0	Calcutta	ditto.
25	Charu Chandra Samanta	...	19-0	Hooghly	ditto.
26	Padmanabha Das	...	19-5	Do.	ditto.
27	Raksha Hari Das	...	17-3	Do.	ditto.
28	Bijan Bihari Chatterji	...	17-8	Do.	ditto.
29	Hara Chandra De	...	17-0	Dacca	ditto.
30	Ras Bihari Banerji	...	17-8	Hooghly	ditto.

Medium.

1	Nilmani Mahana	...	16-8	Hooghly Training School.	
2	Bhola Nath Ray	...	16-8	Do.	ditto.
3	Radha Govinda Acharya	...	20-8	Do.	ditto.
4	Guru Prasad Majumdar	...	19-0	Chittagong	ditto.
5	Bipin Chandra Nag	...	20-0	Do.	ditto.
6	Haripada Mandal	...	18-0	Calcutta	ditto.
7	Narendra Nath Rai	...	19-0	Hooghly	ditto.
8	Hrishikes Misra	...	16-6	Do.	ditto.
9	Purna Chandra Chakravarti		22-0	Calcutta	ditto.
10	Radha Syam Barma	...	21-0	Do.	ditto.
11	Manmatha Nath Acharya		20-0	Hooghly	ditto.
12	Pramatha Nath Mitra	.	18 0	Calcutta	ditto.
13	Kalipada Mukherji	...	18-8	Hooghly	ditto.
14	Sita Nath Haldar	...	21-0	Calcutta	ditto.
15	Krishna Sinkar Das*	...	19-5	Hooghly	ditto.
16	Srinandan Das	...	18 5	Do.	ditto.
17	Bipin Bihari Sarkar	...	20-0	Dacca	ditto.
18	Mahes Chandra Nandi*	...	21-0	Do.	ditto
19	Ayin Uddin Pramanik	...	15-9	Rangpur	ditto.
20	Rajani Kumar Nath†	...	17-6	Chittagong	ditto.
21	Abdul Jabbar Mandal	...	15-8	Rangpur	ditto.

* Entitled to special certificates in Drawing and Practical Geometry.
† Candidates other than those whose names are marked with dagger have passed in Manual work.

Medium—concld.

No.	Name.	Age.	Training School.
22	Gaurpada Chaudhuri* ...	18-0	Hooghly Training School.
23	Rampada Chaudhuri ...	17-5	Do. ditto.
24	Jatindra Mohan Mukherji	19-8	Do. ditto.
25	Jatindra Nath Pal ...	18-0	Calcutta ditto.
26	Khezar Uddin Sarkar ...	17-3	Rangpur ditto.
27	Kamdev Maiti ...	20-0	Calcutta ditto.
28	Mahes Chandra De ...	18-9	Dacca ditto.
29	Kader Bux Biswas ...	23-8	Rangpur ditto.
30	Bhaba Narayan Sardar ...	19-0	Calcutta ditto.
31	Bhut Nath Maiti ...	18-0	Do. ditto.
32	Jatindra Nath Samanta ...	18-0	Hooghly ditto.
33	Aswini Kumar Chakravarti (I).	15-0	Dacca ditto.
34	Abdul Majid Mandal ...	17-8	Rangpur ditto.
35	Bhushan Chandra Ghosh ...	19-8	Hooghly ditto.
36	Surya Kumar Chatterji ...	18-0	Calcutta ditto.
37	Chandra Mohan Mandal ...	17-0	Do. ditto.
38	Priya Nath Khatua ...	18-5	Hooghly ditto.
39	Ratanlal Mandal ...	20-0	Krishnagar ditto.
40	Moyezuddin Mandal* ...	19-6	Rangpur ditto.
41	Jatindra Mohan Bhattacharya.†	25-0	Private (Hooghly).
42	Sarat Chandra Sarkar ...	16-8	Hooghly Training School.
43	Bibhuti Bhushan Haldar ...	26-0	Calcutta ditto.
44	Probodh Kumar Mullik ...	20-0	Krishnagar ditto.
to	Masiruddin Khan ...	21-9	Rangpur ditto.
46	Ramdas Sarkar ...	19-9	Do. ditto.
47	Bhupendra Nath Misra ...	17-0	Calcutta ditto.
48	Faratulla Muhammad ...	17-8	Rangpur ditto.
49	Khudiram Ray ...	18-8	Hooghly ditto.
50	Kshirod Kumar Maiti ...	21-0	Calcutta ditto.
51	Param Chandra Pal ...	16-0	Dacca ditto.
52	Syama Charan Bhattacharya†.	20-0	Chittagong ditto.
53	Sita Nath Saha ...	23-0	Private (Dacca).
54	Bhuban Chandra Maiti ...	21-0	Calcutta Training School.
55	Sajani Kanta Das ...	18-8	Hooghly ditto.
56	Aswini Kumar Das ...	19-0	Dacca ditto.
57	Dharanidhar Karmakar ...	17-0	Calcutta ditto.
58	Sripati Charan Chaudhuri ...	17-0	Do. ditto.
59	Akhil Chandra Haldar ...	19-0	Dacca ditto.
60	Bhupati Bhushan Samanta	17-8	Hooghly ditto.
61	Abdul Jalil Afrad ...	16-0	Dacca ditto.
62	Asutosh Chaudhuri† ...	18-0	Chittagong ditto.
63	Sarada Charan Ray ...	20-0	Calcutta ditto.
64	Rajmohan Pal ...	18-0	Dacca ditto.
65	Damodar Mukherji ...	18-8	Hooghly ditto.
66	Kshetra Nath Banerji ...	18-5	Calcutta ditto.

Low.

1	Srimantalal Das ...	19-5	Hooghly Training School.
2	Prasanna Kumar De* ...	16-0	Dacca ditto.
3	Kamini Ranjan Hore ...	20-0	Chittagong ditto.
4	Giris Chandra Maiti ...	22-6	Calcutta ditto.
5	Wab Mia Sikdar† ...	20-0	Chittagong ditto.
6	Ramani Kumar Chaki* ...	17-8	Rangpur ditto.
7	Kalikanta Chakravarti ...	19-0	Dacca ditto.
8	Radha Ballabh Karmakar...	18-8	Hooghly ditto.
9	Sadat Ali ...	18-0	Dacca ditto.
10	Sadhar Mandal ...	17-0	Calcutta ditto.
11	Khosrab Uddin Biswas ...	18-0	Hooghly ditto.
12	Jugul Kisor Thakur ...	19-8	Do. ditto.
13	Bhutnath Chatterji ...	20-5	Do. ditto.

* Entitled to special certificates in Drawing and Practical Geometry.
† Candidates other than those whose names are marked with dagger have passed in Manual work.

Candidates already passed in the old Course and taking up one or more new subjects.

FIRST GRADE.

Science, Art of Teaching and Kindergarten, Drawing, Drill and Manual work.

No.	NAME.	Age.	Training School.
	Raj Krishna Das		Calcutta (Private).

Art of Teaching and Kindergarten, Drawing, Drill and Manual work.

	Prasanna Coomar Mojumdar	22-0	Chittagong (Private).

Art of Teaching and Kindergarten, Drill and Manual work.

	Sarat Chandra Bhaumik ...	29-0	Chittagong (Private).
	Govinda Chandra Acharji ...	25-9	Rangpur do.
	Sudarsan Chandra Biswas ..		Hooghly do
	Hari Prasanna Chaudhuri	31-0	Do. do.

Art of Teaching and Kindergarten, Science, Drill and Manual work.

	Aswini Kumar Nag ...	23-0	Dacca (Private).
	Ras Mohan Nath ...	35-0	Do. do.

Drawing and Practical Geometry.

	Bazlor Rahman Mia ...	28-0	Rangpur (Private).
	Sarat Chandra Das . .	19-0	Calcutta do.

Drawing and Practical Geometry and Drill.

	Raj Koomar De ...	34-0	Chittagong (Private).

Science, Drill and Manual works.

	Ramani Kanta Das		Calcutta (Private).

Manual Work.

	Srinath Chandra Maiti		Calcutta (Private).

SECOND GRADE.

High.

1	Sripati Bhattacharja ...	18-3	Rangpur Training	School.
2	Sasibhusan Das ...	17-11	Hooghly	ditto.
3	Nareswar Sarma ..	21-5	Rangpur	ditto.
4	Kalipada Majilsa . .	15-11	Hooghly	ditto.
5	Khondker Fasle Karim ...	22-0	Dacca	ditto.
6	Golam Khaibar Khondkar	15-9	Rangpur	ditto.
7	Phelaram Mohanta ...	15-8	Hooghly	ditto.
8	Raksha Chandra Pal ...	18-11	Do.	ditto
9	Kali Prasanna Mozoomdar	17-0	Chittagong	ditto.
10	Sisupati De	18-5	Hooghly	ditto.
11	Purna Chander Pandit ...	21-0	Chittagong	ditto.
12	Govinda Chander Manji ...	17-0	Calcutta	ditto.
13	Syama Churn Chowdhuri ...	17-0	Chittagong	ditto.
14	Mahendra Nath Das ...	18-0	Calcutta	ditto.
15	Monomohan Kanangoe ...	20-0	Chittagong	ditto.
16	Bepin Behari Das ...	16-11	Hooghly	ditto.
17	Radhika Prosad Mukerjee	15-11	Do.	ditto.
18 to 20	Chintamoni Gupta ...	15-11	Do.	ditto.
	Prasanna Coomar Das ...	23-9	Rangpur	ditto.
	Rahimuddin Sarkar ...	16-4	Do.	ditto.
21	Pratap Chandra Sarkar ...	15-5	Hooghly	ditto.
22	Karim Bux	20-0	Chittagong	ditto.
23	Kasi Waizuddin Ahmed ...	22-0	Do.	ditto.
24	Bejoy Krishna Baidya ...	20-0	Calcutta	ditto.
25	Monomohan Chowdhuri ...	17-6	Chittagong	ditto.
26	Sahiruddin Pramanik ...	19-9	Rangpur	ditto.
27	Nisi Kanta Biswas ...	22-0	Calcutta	ditto.
28	Basiruddin Sarkar ...	15-3	Rangpur	ditto.
29	Nagendra Nath Haldar ...	18-0	Calcutta	ditto.
30	Dakshina Ranjan Chatterjee	18-11	Hooghly	ditto.
31	Iswar Chandra Maiti ...	24-0	Calcutta	ditto.

SECOND GRADE.—*concld.*

Medium.

No.	NAME.	Age.	Training School.
1	Kunchil Chandra Banerjee	21-0	Private (Calcutta).
2	Rasik Lal Pattak ..	16-8	Dacca Training School.
3	Kalika Prasad Chackravarti	26-8	Do ditto.
4	Rohini Kanta Sarkar ...	15-9	Rangpur ditto.
5 to 8	Bhupati Bhusan Ruj ...	17-5	Hooghly ditto.
	Tejendra Kumar Chowdhuri	18-0	Chittagong ditto.
	Jabed Ali Khan ...	14-4	Rangpur ditto.
	Gaur Mohan Nayak ...	18-0	Calcutta ditto.
9	Purna Chandra Chatterjee	17-8	Hooghly ditto.
10	Priya Nath Mandal ...	20-0	Krishnagar ditto.
11	Kalipada Sarkar ...	19-0	Calcutta ditto.
12	Jagat Chandra De ...	21-8	Dacca ditto.
13	Hrishikesh Chattoraj ...	17-11	Hooghly ditto.
14	Kashipati Panja ...	15-11	Do. ditto.
15	Badshah Mia ...	14-4	Dacca ditto.
16	Nalini Kanta Chowdhuri ...	18-0	Calcutta ditto.
17	Basaki Nath Gorai ...	16-7	Hooghly ditto.
18	Rajani Mohan Chakravarti	15-11	Rangpur ditto.
19	Mahammad Maizar Rahuman.	17-8	Hooghly ditto.
20	Girish Chandra Das ..	19-0	Calcutta ditto.
21	Chandi Charan Roy ...	17-0	Do. ditto.
22 to 24	Mrittunjoy Mandal ...	19-0	Do. ditto.
	Sambhu Nath Mukerjee ...	18-0	Do. ditto.
	Gangadhar Das ...	17-2	Rangpur ditto.
25	Govinda Chandra Maiti† ...	31-0	Private (Calcutta).
26	Rajkumar Chackravarti ...	17-3	Dacca Training School.
27	Haladhar Pal ...	16-0	Dacca ditto.
28	Arjuna Chandra Das ...	17-0	Chittagong ditto.
29	Nanda Lal Roy ...	18-0	Calcutta ditto.
30	Purna Chander Banerjee	17-8	Hooghly ditto.
31 to 33	Mati Lal Kundu ..	20-8	Do. ditto.
	Rasik Chandra Bhadra ...	20-0	Calcutta ditto.
	Beni Madhab Manna ...	18-0	Do. ditto.
34	Kali Prasad Jana ...	19-0	Do. ditto.
35 to 39	Gopal Chandra Khan† ...	19-5	Hooghly ditto.
	Abdul Aziz Munsi ...	19-0	Dacca ditto.
	Dharani Dhar Boal ...	16-0	Calcutta ditto.
	Baikuntha Nath Das ...	20-0	Do. ditto.
	Rukmini Kanta Das ...	19-0	Do. ditto.
40	Abinas Chander Sinha ...	16-0	Do. ditto.
41	Sarat Chander Nandi ...	19-0	Chittagong ditto.
42	Mukunda Lal Mookerjee ...	18-0	Hooghly ditto.
43	Sahadev Chandra Das	17-3	Dacca ditto.
44 to 46	Kamini Mohan Chackravarti	13-9	Do. ditto.
	Suresh Chandra Jas (II)...	17-3	Hooghly ditto.
	Rajkishore Paudit ...	17-0	Dacca ditto.
47	Charu Chandra Mukerjee ...	...	Private (Calcutta).
48	Raghu Nath Pal ...	19 0	Calcutta Training School.
49	Raj Giri Ghose ...	19-9	Rangpur ditto.
50	Rasaraj Majumdar ...	17-11	Hooghly ditto.
51	Nalinaksha Ghosh ...	17-8	Do. ditto
52	Sheikh Gulsar Hussain ...	16-9	Rangpur ditto.
53	Gopal Kisku	17-0	Krishnagar ditto.
54	Kshudiram Acharjya ...	17-0	Calcutta ditto.
55 to 58	Gopal Chander Das † ...	19-0	Do. ditto.
	Sital Chander Pal † ...	19-0	Private (Calcutta).
	Jogendra Nath Guha ...	17-0	Calcutta Training School.
	Sherifutulla Akanda ...	18-7	Rangpur ditto.
59	Kashim Uddin Ahmed ...	15-9	Do. ditto.
60 to 62	Abhoy Churn Guha ...	19-0	Calcutta ditto.
	Gopal Chunder Mukerjee ...	18-0	Do. ditto.
	Rohini Kumar Bhaumik ...	20-0	Chittagong ditto.
63 to 65	Kala Chand Maiti ...	17-0	Calcutta ditto.
	Kamalakanta Sarkar ...	17-11	Hooghly ditto.
	Aman Ulla ...	14-4	Rangpur ditto.
66	Lalit Kumar De ...	19-0	Calcutta ditto.

† Candidates other than those, whose names are marked with dagger have passed in Manual work.

SECOND GRADE—*contd.*

Medium—contd.

No.	NAME.	Age.	Training School.
67	Moyenuddin Mandal ...	17-9	Rangpur Training School.
68	Guna Sindhu Naskar ...	16-0	Calcutta ditto.
69	Kamaluddin Ahmad ...	19 3	Rangpur ditto.
70	Muhammad Ebadulla ...	21-0	Dacca ditto.
71	Safat Ali Munsi ...	15-3	Rangpur ditto.
72	Lalit Mohan Chatterjee ...	16 11	Hooghly ditto.
73	Din Dayal Nandi ...	19-0	Calcutta ditto.
74	Girindra Nath Biswas ...	16-0	Krishnagar ditto.
75	Bipin Chander Saha	16-0	Dacca ditto.
76	Paban Chander Das ...	17-9	Rangpur ditto.
77	Dharani Dhar Maiti ...	20-0	Calcutta ditto.
to	Abul Hossein Khan ...	15-0	Dacca ditto.
79	Sayed Jharu Mia ...	18-8	Hooghly ditto.
80	Hrishikesh Bhandari ...	17-0	Calcutta ditto.
81	Bibhuti Bhusan Sarkar ...	16 11	Hooghly ditto.
82	Hem Chandra Jana ...	16-0	Calcutta ditto.
83	Abbas Ali	16-0	Chittagong ditto.
84	Sasibhusan Mukerjee ..	23-0	Calcutta ditto.
85	Khodadad Mia ...	16-11	Hooghly ditto.
86	Parameswar Das Adak ...	17-0	Calcutta ditto.
87	Rajani Mohan Roy ...	17-10	Rangpur ditto.
88	Indra Kumar De ...	18-0	Dacca ditto.
89	Indra Narayan Jana ...	17-0	Calcutta ditto.
90	Farman Ali	15-9	Dacca ditto.
91	Sribas Das	16-11	Hooghly ditto.
92	Atul Chunder De ...	17-0	Calcutta ditto.
93	Bhutnath Mandal ...	16-11	Hooghly ditto.
94	Abdul Samad Khan ...	18-0	Dacca ditto.
95	Satish Chandra Nandi ...	16-0	Chittagong ditto.
96	Brajendra Kishore Kar ...	19-6	Private (Dacca).
97	Khetra Nath Das† .	22-0	Calcutta Training School.
98	Rash Behari Chakravarti ...	17-3	Dacca ditto.
99	Debendra Nath Sahu ...	19-0	Calcutta ditto.
100	Parvati Charan Mandal ...	23 0	Private (Calcutta).
101	Gokul Chandra Kar ...	17-2	Dacca Training School.
102	Nanda Kumar Saha ...	17-8	Do. ditto.
103	Nayan Chand Mullick ..	21-9	Calcutta ditto.
104	Ramgati Roy	18-0	Do. ditto.
105	Sarif Uddin	18-9	Rangpur ditto.
106	Banamali Bar ...	20-0	Dacca ditto.
107	Sarbosh Ali Akanda ...	17-0	Rangpur (Private).
108	Baman Das Ghosh ...	17-0	Calcutta Training School.
109	Kumarish Chandra Ghosal†	19 0	Do. ditto.
to	Nrgendra Nath Majumdar†	17-0	Do. ditto.
111	Ram Chandra Kar ...	17-0	Dacca ditto.
112	Indra Narayan Banerjee ...	16-11	Hooghly ditto.
113	Ashutosh Buxi ...	19-0	Calcutta ditto.
114	Bhabataran Mukerjee ..	18-0	Do. ditto.
115	Bhola Nath Mukerjee† ...	20-0	Hooghly (Private).

Low.

1	Bhupati Bhusan Banerjee...	17-8	Hooghly Training School.
2	Nabadwip Chandra Baishnab	15-0	Chittagong ditto.
3	Saim Uddin Mandal ...	16-3	Rangpur ditto.
4	Rajab Ali Mollah ...	21-3	Do. ditto.
5	Radha Binod Pal ...	18-11	Hooghly ditto.
6	Jadu Nath Sil ...	19-9	Rangpur ditto.
7	Bhujanga Bhusan Bhattacharjee.	15-3	Do. ditto.
8	Aswini Coomar De ...	15-0	Dacca ditto.
9	Indra Coomar Majumdar ...	17-5	Hooghly ditto.
10	Abbas Uddin Talukdar ...	18 3	Rangpur ditto.
11	Pranath Biswas ...	20-0	Krishnagar ditto.
12	Rajani Kanta Chakravarti .	15-9	Dacca ditto.
13	Rohini Ranjan Muchchiddi†	17-4	Chittagong (Private).
14	Samuel Biswas ...	19-0	Krishnagar ditto.
15	Rajani Kanta Roy ...	17-0	Dacca ditto.

† Candidates other than those whose names are marked with dagger have passed in Manual work.

SECOND GRADE—*concld.*

Low—concld..

No.	NAME.	Age.	Training School.
16	Sasi Bhusan Chowdhuri ...	19·0	Chittagong Training School
17	Hari Mohan Sarkar ...	16·9	Rangpur ditto.
18	Serajul Islam Chaudhuri ...	17·0	Chittagong ditto.
19	Chandra Sekhar Khan ...	19-10	Hooghly (Private).
20	Ram Charan Biswas ...	27-8	Calcutta (Private.)
21	Prasanna Mohan Majumdar	16-3	Dacca Training School.
22	Sasadhar Goswami ...	16-0	Calcutta ditto.
23	Kanti Chandra Chakravarti	18-0	Do. ditto.
24	Dwarka Nath Das .	17-5	Dacca ditto.
25	Purna Chandra Mandal ...	15 0	Calcutta ditto.
26	Hari Mohan Nandi ..	15-1	Hooghly ditto.
27	Achyutananda Chakravarti	19-0	Calcutta ditto.
28	Pasupati Nath Saha † ...	17 0	Do. ditto.

V. H. JACKSON,
Assistant Director of Public Instruction, Bengal.

CALCUTTA,
The 11th April 1905.

List of successful candidates at the "B" class final examination, 1905.

(In order of merit)

Name.	School.	Age. Yrs.	M.
Narendra Mohan Mazumdar ...	Barisal Zilla School ...	20	2
Rajendra Nath Dhar	Ditto ...	18	5
Satya Prokas Chowdhuri	Pabna Zilla School	17	7
Jyanendra Mohan Guha	Dacca Collegiate School ...	19	3
Gopeswar Saha	Mymensingh Zilla School ...	18	10
Satis Chandra De	Dacca Collegiate School ...	22	2
Kamini Kanta Basu	Comilla Zilla School ...	19	8
Ambika Charan Chowdhuri ...	Ditto ...	17	9
Hemanta Kumar Ray	Dacca Collegiate School ...	21	8
Bibhuty Bhusan Nag	Ditto ...	18	1
Promotha Nath Sarcar	Pabna Zilla School ...	19	11
Annada Charan Bhattacharjee ...	Comilla Victoria School ...	17	4
Gonesh Gobinda Maitra	Pabna Zilla School ...	18	8
Digendra Nath Sircar	Mymensingh Zilla School ...	16	9
Makhan Lal Saha	Pabna Zilla School ...	16	1
Jitendra Nath Ray	Rangpur Zilla School ...	16	10
Ambica Charan Sen	Ditto ...	18	9
Satis Chandra Das Gupta	Barisal Zilla School ...	15	3
Jatindra Nath Sen	Ditto ...	17	10
Lalit Mohan Ganguli	Ditto ...	15	10
Amrita Lal Chatterji	Ditto ...	15	10
Ajit Kumar Bandyopadhyaya ...	Midnapore Collegiate School ...	17	2
Muhammad Ataullah	Ranchi Zillah School ...	16	0
Prem Prokash Kachhap	Ditto ...	21	0
Rajendra Nath Das Gupta ...	Ditto ...	14	11

"O" Class.

Patal Chandra Ghose	Uttarpara Government School ...	17	7
Kshitindra Nath Gupta	Hare School ...	19	10
Atul Chandra Sen	Ditto ...	16	6
Durga Charan Ganguli	Uttarpara Government School ...	18	6
Lachmi Narayan	Patna Collegiate School ...	19	0

CALCUTTA,
The 28th March 1905.

A. PEDLER,
Director of Public Instruction, Bengal.

INSTRUCTIONS FOR THE APPOINTMENT AND PROCEEDINGS OF VISITING COMMITTEES OF SECONDARY SCHOOLS MAINTAINED FROM PUBLIC FUNDS. (APPROVED IN GOVERNMENT ORDER No. 1812(EDN.), DATED 31ST MARCH 1905.)

[These rules are supplementary to the rules for the management of schools, which are already in force.]

1. For every secondary school managed by Government or by a District Board, Municipal Committee or Joint-Committee there should be Visiting Committees, consisting of local residents adequately representing the classes from which the students are drawn.

2. For Government schools, except collegiate schools, the members of the Visiting Committees should be appointed by the District Officer in consultation with the Inspector of Schools. For collegiate schools they should be appointed by the Director of Public Instruction on the nomination of the Principals of the attached colleges, who should consult suitable local authorities before sending in their selections.

3. For schools managed by District Boards, Municipal Committees or Joint-Committees, the members should be appointed from among the members of the District and Local Boards, Municipal Committees or Joint-Committees, as the case may be, by the Chairmen concerned. Other gentlemen interested in education may also be appointed members.

4. The term of office of members of Visiting Committees should be for a period of three years from the date of their appointment. Any member should be eligible for reappointment at the end of that period at the discretion of the appointing authority. Members who have not fulfilled the duties for which they were appointed should not be reappointed on the expiry of the three years' term of office. A member should be appointed whenever a vacancy occurs.

5. Visiting Committees shall have no power to issue any orders to the Head Masters of schools, their functions being confined to the offering of advice for the consideration of the school authorities and the officers of the Education Department.

6. The Visiting Committee of a school should inspect the institution at least once a quarter. Visits should not, however, be paid to the school during school-hours more often than once a month. Due notice of visit should ordinarily be given to the Head Master, but surprise visits may be made when necessary. The number of members visiting a school on any occasion should not be more than two.

7. The Visiting Committee should either record their opinion in the Visitors' Book of the school for the information of the Inspector or the Deputy Inspector of Schools, or the Principal of the College, as the case may be, or may communicate their suggestions in writing direct. A copy of the remarks should also be forwarded in the case of schools managed by District Boards, Municipal Committees or Joint-Committees to the Chairman concerned within three days of the inspection.

8. The members of every Visiting Committee should elect from amongst themselves a Chairman and a Secretary, and submit their names to the District Officer, the Director of Public Instruction or the Chairman of the District Board, Municipal Committee or Joint-Committee, as the case may be, for approval.

9. A meeting of a Visiting Committee should be called by the Secretary when considered necessary, or at the requisition of any two members of the Committee, for the general discussion of matters relating to the school. Not less than seven days' notice should be given of any meeting.

10. The notice should set forth the business to be transacted at the meeting, and no business other than that so stated should be transacted, except with the consent of all the members present. When any business of which notice has not been given is considered at a meeting, the decision recorded or resolution adopted at such meeting should be communicated forthwith to all the members, and the subject should be capable of being re-opened at a subsequent meeting convened on a requisition made by three members of the Committee within seven days of the communication of the original resolution; but, save as hereinbefore mentioned, no subject once finally disposed of should be reconsidered within six months, unless two-thirds of the members consent by signing a requisition.

11. The maximum number of members of a Visiting Committee should be ten and the minimum six, and one third of the members in office should form a quorum. The Chairman should have a casting vote, in addition to his ordinary vote, in cases where the votes of the members present are equally divided. In the absence of the Chairman, one of the members present should be elected to preside. Committees should formulate any further rules of business that may be necessary.

12. Under the directions of the Committee, the Secretary should carry on correspondence with the proper authorities on behalf of the Committee, and be in charge of all papers belonging to the Committee.

13. The Secretary shall keep a record of the proceedings of each meeting and submit it to the next meeting for confirmation. Such proceedings and all work done by a Committee shall be duly recorded in a book kept for the purpose, which should be open for inspection by all inspecting officers of the Education Department.

INSTRUCTIONS FOR THE APPOINTMENT AND PROCEEDINGS OF COMMITTEES OF MANAGEMENT OF AIDED SECONDARY SCHOOLS. (APPROVED IN GOVERNMENT ORDER No. 1812(EDN.), DATED 31ST MARCH 1905.)

[These rules are supplementary to the rules already in force in schools aided by Government or by District Boards and Municipalities.]

1. The general management of an aided secondary school, high or middle, is subject to the rules prescribed from time to time by Government or the Department for the management of aided schools The local management should remain in the hands of a Committee of Management, the members of which should be so selected as to represent all classes of the community—legal, commercial, trading, industrial and agricultural; but in cases in which the Director of Public Instruction is satisfied that the promoters of a school can give guarantees for efficient management otherwise, it will be sufficient if it is placed under a Visiting Committee as in the case of a school maintained from public funds.

2. Appointments to a Committee of Management should be made with the approval of—

(*a*) The District Officer, in consultation with the Inspector of Schools, in the case of a school aided by Government;

(*b*) The Chairman of the District Board or Municipal Committee, in the case of a school aided by a District Board or Municipal Committee.

3. The members of a Committee of Management of a school should elect from amongst themselves a Chairman, a Secretary and an Auditor, and submit their names to the District Officer or the Chairman, as the case may be, for previous approval.

4. A meeting of the Committee should be called by the Secretary, usually once every month (except in the long vacation months), or oftener if need be. Not less than seven days' notice should be given of any meeting.

5. The notice should set forth the business to be transacted at the meeting, and no business other than that so stated should be transacted, except with the consent of all the members present. When any business of which notice has not been given is considered at a meeting, the decision recorded or resolution adopted at such meeting should be communicated forthwith to all the members, and the subject should be capable of being re-opened at a subsequent meeting convened on a requisition made by three members of the Committee within seven days of the communication of the original resolution; but, save as hereinbefore mentioned, no subject once finally disposed of should be reconsidered within six months, unless two-thirds of the members consent by signing a requisition.

6. The monthly audited accounts should be presented at the next month's meeting of the Committee for the purpose of being passed.

7. The maximum number of members of a Committee should be ten and the minimum six, and one-third of the members in office should form a quorum. The Chairman should have a casting vote, in addition to his ordinary vote, when the votes of the members present are equally divided. In the absence of the Chairman, one of the members present should be elected to preside. Committees should formulate any further rules of business that may be necessary

8. Under the direction of the Committee, the Secretary should carry on correspondence with the proper authorities on behalf of the Committee. He should also keep a record of the proceedings of each meeting and submit it to the next meeting for confirmation. Such proceedings and all work done by the Committee should be duly recorded in a book kept for the purpose.

9. The trust-deeds and other important papers relating to the school should be in charge of the Secretary or of some resident member of the Committee, except those which it is necessary to keep in the special charge of the Head Master; but all papers relating to the school in the shape of accounts and records should be available at any time for inspection by all inspecting officers of the Education Department.

10. No teacher should be appointed, promoted, suspended or removed, except by a resolution passed at a meeting of the Committee. In all cases of appointment, promotion and removal of the staff, the Head Master's opinion should be on record, and the Committee should always record reasons for removal, punishment, stoppage of promotion and supersession of the staff.

In exceptionally urgent cases relating to teachers other than the Head Master, however, the Secretary should, after consultation with the Head Master, make a provisional appointment in anticipation of the Committee's sanction; but the matter should be reported to the Committee at their next meeting for approval.

Similarly a provisional arrangement should be made by the Secretary in consultation with the Chairman, and subject to the approval of the Committee, in respect of a vacancy in the Head Mastership when the case is exceptionally urgent; but this should not be taken to dispense with the necessity of final confirmation by the existing educational authorities, as required under the grant-in-aid rules.

11. Subject to the provisions of the grant-in-aid rules, the list of holidays will be settled by the Secretary, in consultation with the Head Master. In the case of a difference of opinion between the Secretary and the Head Master, the matter should be referred to the Committee for decision.

12. The arrangement of classes, the settlement of the school routine, and all other details relating to school discipline and teaching should be in charge of the Head Master, acting under the advice of the departmental educational officers, but the Committee, however, should have the right to offer their opinion and advice in these matters in writing to the Inspector or the Deputy Inspector of Schools.

13. All questions relating to the promotion of boys and the selection of candidates for the Entrance and Scholarship examinations should remain in the hands of the Head Master and be subject to the supervision of the inspecting officers of the Education Department only.

A. PEDLER,

Director of Public Instruction, Bengal.

STATE TECHNICAL SCHOLARSHIPS FOR NATIVES OF BENGAL.

1. With a view to provide for natives of India the higher technical education which may qualify them to assist in promoting the improvement of existing native industries, and the development of new industries wherever this may be possible, the Government of India are ready, as an experimental measure, to give a small number of Technical scholarships, if promising candidates, well qualified in some particular branch of industry, present themselves. The outlines of the scheme are sketched out below.

2. *Value of the scholarships* —The value of the scholarships has been fixed at £150 a year, in addition to fees payable to the institutions where the scholars will study and travelling expenses; but Government will consider proposals for increasing it in special cases.

3. *Places and periods of tenure* — Each scholarship is tenable for an average period of two years, which may be increased or reduced in special cases.

4. The scholarships may be held in Great Britain, on the Continent of Europe, or in America, and are payable from the date of the scholar's arrival in the country which he may select for study.

5. *Subjects of study* —Law, Medicine, Forestry, Veterinary Science, Agriculture and Engineering have been excluded from the scope of the present proposal. The scholarships are in the first instance proposed to be used for the encouragement of the mining industry in Bengal, but any other branch of industry can similarly be helped and fostered. Industries in which native capital and enterprise are engaged, or likely to be engaged, and in which the trained scholar might, on return to his country, find scope for his skill and ability, will be particularly appropriate for selection.

6. *Conditions of award.*—The scholarships are tenable by persons who are natives of India within the meaning of section 6 of the Statute, 33 Vic., Cap. 3. A competent knowledge of English, or the language of any other country in which the candidate proposes to work and study is essential to enable him to take full advantage of the course of study.

7. In the matter of selection of scholars, Government will be guided by considerations of the candidate's capacity, intelligence, particular interest in and connection with the industry selected, and the assurance that he will continue to devote himself to the subject on his return to India. These being matters which cannot be decided by the holding of degrees obtained, by examination, or by competition, no special examination is considered necessary and none will be held. But a scholar before nomination should have received the best technical education available in the Province, in the particular industry which he has to study, and no candidate will be considered qualified unless he has displayed an aptitude for technical study.

8. No age-limit has been fixed. But it may be fixed by Government in certain cases.

9. The candidates for scholarships should submit certificates attesting (*a*) their moral character, (*b*) knowledge of the language of the country in which they elect to study, and (*c*) physical capacity, from recognized persons who may be considered fit to certify to these facts. These certificates will not be returned.

10. The scholars in England or elsewhere, as the case may be, will be under the control and supervision of the Secretary of State. The conditions under which they will hold the scholarships will be similar to those laid down for Government of India scholarships, and power will be retained to cancel a scholarship and to send the scholar back to India if his progress and conduct be not satisfactory.

11. *Returned scholars* —No scholar will be bound on his return to India by any engagement to serve Government or a private firm, and the choice of his career will be in the first instance determined, on his return from Europe by his own inclination. Should any occasion arise, Government will be glad to turn his ability and increased knowledge to account as teacher in an Industrial school or in other capacities connected with the improvement of local industries.

12. Applications from natives of Bengal for such scholarships for the development of the mining industry, in the first instance, should be made direct to the Director of Public Instruction, Bengal, on or before the 1st May 1905. Full particulars should be furnished as

to the past educational experience, training and future requirements of each applicant for a scholarship. Applicants should also indicate, if possible, what they wish to work at in their future careers on return to India. The scholarships will be awarded by the Government of India on the recommendation of the Local Government.

CALCUTTA,
The 4th April 1905.

A. PEDLER,
Director of Public Instruction, Bengal.

List of Candidates who passed the Survey examination for Pleaders held in February 1905.

Number in General Register.	Name of candidate.	Where appeared.
2.	Hari Das Basu	Civil Engineering College, Sibpur.
10.	Nanda Kisor Mukerjee	Ditto
18.	Jitendra Kumar Das Gupta ..	Ditto.
19.	Hari Jiban Banerjee	Ditto.
28.	Upendra Nath Kundu	Ditto.
31.	Provas Chandra Goswami ...	Bihar School of Engineering.
15.	Rai Mohan Karmokar	Dacca Survey School.
41.	Kedareswar Roy	Ditto.
1.	Nihar Ranjan Banerjee	Cuttack Survey School.
8.	Laksmi Narayan Sarkar ...	Ditto.
11.	Gopal Chandra Mukerjee ...	Ditto.
12.	Hanseswar Chattapadhaya ...	Ditto.
13.	Krishna Lal Chatterjee	Ditto.
14.	Kali Das Nandy	Ditto.
22.	Dines Charan Roy	Ditto.

A. PEDLER,
The 23rd March 1905. *Director of Public Instruction, Bengal.*

NOTICE.

IN connection with the Commercial classes in the Presidency College, Professor H. M. Percival will deliver a course of about 32 lectures in the *evening* on the Outlines of Political Economy.

The course will begin on Tuesday, the 7th March, at 6-30 P.M., and will be continued on Tuesdays and Fridays at the same hour until further notice. The first lecture will be open to the public. The subject will be treated popularly.

The fee for the whole course will be Rs. 5, payable in advance.

Tickets may be obtained from the College office between 11 A.M. and 4 P.M. on week days.

CALCUTTA,
The 20th March 1905.

P. K. RAY,
Offg. Principal, Presidency College.

NOTICE.

COMMERCIAL CLASSES IN THE PRESIDENCY COLLEGE.

DAY classes in the following subjects will be opened in the College on the 25th June 1905 :—

1. English (modern), especially English correspondence, including Commercial correspondence, letter-drafting and précis-writing.
2. Arithmetic, including Commercial and Mental Arithmetic.
3. Book-keeping, Short-hand and Type-writing.
4. Commercial History and Geography.
5. Bengali, especially Commercial correspondence, letter-writing, précis-writing and translation.

All will be admitted to the Day classes who have passed the School Final or the Entrance Examination or who are able to satisfy the Education Department by passing a simple preliminary test examination.

There is no age limit.

The fee for the Day classes is Rs. 3 a month.

P. K. RAY,
Offg. Principal, Presidency College.

PRESIDENCY COLLEGE, CALCUTTA, *the 8th March 1905.*

VERNACULAR MASTERSHIP EXAMINATION, 1905.

(PATNA, BHAGALPUR AND CHOTA NAGPUR DIVISIONS).

FIRST GRADE.

The undermentioned candidates have passed the examination.

High.

No.	Name.	Age. Yrs.	M.	School.
1	Mangani Roy*	19	8	Patna Training School.

Medium.

[In order of merit].

1	Shyama Ram	18	8	Patna Training School.
2	Bal Mukund Lal	17	5	„ „ „
3	Gazumfar Hussain*	18	8	„ „ „
4	Shyam Sundar Sahu*	15	4	Ranchi „ „
5	Mohammad Abdul Majid	15	8	Patna „ „
6	Shewabaran Pandey*	13	3	„ „ „
7	Jadu Nandan Upadhya*	18	8	„ „ „
8	Bhagabat Pandey†	18	2	„ „ „
9	Ranjit Sinha†	15	11	„ „ „
10	Hardeo Singh	18	2	„ „ „
11	Ram Naresh Chaubey	18	2	„ „ „
12	Matadin Avasthi...	18	4	„ „ „
13	Sheo Dutt Pandey	17	7	„ „ „
14	Jay Nandan Sinha	18	8	„ „ „
15	Abdul Razaq	17	8	„ „ „
16	Muneswar Lal†	18	8	„ „ „
17	Bishun Roy†	17	7	„ „ „

Low.

1	Syed Mahammad Yusuf*	18	8	Patna Training School.

FIRST GRADE.

Candidates passed in the Old Course and taking up one or more new subjects.

SCIENCE, KINDERGARTEN AND ART OF TEACHING, DRAWING, DRILL AND MANUAL WORK.

	Ram Naresh Ram	27	0	Head Pandit, Kamtaul M. V. School.

Science, Kindergarten and art of Teaching, Drill and Manual Work.

	Jaleswar Prasad	20	0	Head Pandit, Patabi Guru-training School.

SECOND GRADE.

High.

1	Gouri Prasad	18	11	Ranchi Training School.
2	Raja Sinha†	15	7	Patna „ „

Medium.

[Arranged in order of merit.]

		Yrs.	M.	
1	Din Dayal Pandey	17	1	Ranchi Training School.
2-3	Kamtah Prasad	16	1	Patna „ „
2-3	Amir Chand Ram	18	8	„ „ „
4	Lakshmi Sinha	15	9	„ „ „

* Entitled to special Certificates in Drawing.
† Candidates other than those whose names are marked with dagger have passed in Manual Work.

No.	Name.	Age. Yrs.	M.	School.
5	Shyama Singh	18	4	Ranchi Training School.
6	Niranjan Misra†	18	11	Patna " "
7	Jhinguri Chaubey	18	8	" " "
8	Dhanush Dhari Mahto	25	0	Head Guru, Panari Upper Primary School.
9	Indrasan Pandey	16	9	Matihari Training School.
10	Mahammad Abdul Wahid	16	10	Patna " "
11	Bedananda Kuar†	16	1	" " "
12	Mahabir Prasad	16	8	" " "
13	Ramdas Ram†	20	9	" " "
14	Kanda Potor Ho	19	4	Ranchi " "
15	Ram Saighasan Prosad	19	3	Matihari " "
16	Ram Charitra Jha†	17	3	Patna " "
17-18	Kedar Nath Chaudhuri†	17	2	" " "
	Deo Narayan Lal	19	3	Matihari " "
19	Chhatu Ram	16	2	Ranchi " "
20	Ram Bahadur Sinha	18	9	Matihari " "
21	Bhupal Sahu†	16	9	Patna " "
22	Deo Charan Ram	18	0	Ranchi " "
23	Indordeo Lal	17	6	Matihari " "
24	Durga Sinha†	15	11	Patna " "
25	Joygovind Misra†	18	2	" " "
26	Chandra Madhab Roy†	15	2	" " "
27	Anup Chowdhuri†	17	2	" " "
28	Basudeo Narayan Chowdhuri†	16	2	" " "
29	Nand Kishwar Lal	32	0	2nd Master, Budhkara Raj M. V. School.
30	Lakshman Mahton†	19	2	Patna Training School.
31	Suleman	17	7	Ranchi " "

Law.

[In order of merit.]

1	Gudar Ram	17	1	Ranchi Training School.
2-3	Abdul Gani	16	8	Patna " "
	Ram Chandra Rai†	19	0	Teacher.
4-5	Ram Chiz Pandey†	17	8	Patna Training School.
	Rangtoo Hazam	15	4	Ranchi " "
6	Matukdhari Singha	20	0	Head Guru, Sain Upper Primary School.

† Candidate other than those whose names are marked with dagger have passed in Manual Work.

CALCUTTA,
The 10th April 1905.

V. H. JACKSON.
Assistant Director of Public Instruction Bengal.

NOTICE.

IN reference to this Department notification dated the 26th January 1905, regarding the syllabus for English Readers for Standards III to VI for schools for Indian pupils, notice is given that such books (with the usual applications) should be submitted to the Director of Public Instruction for transmission after preliminary examination to the Text-Book Committee, not later than the 1st May 1905.

2. The application should state clearly that the books have been written in accordance with this Department notification dated the 26th January 1905.

3. Arrangements will then be made for the rapid examination of those books, and those which are approved will be included in the July list of approved books.

4. Unless this is done authors of such text-books will stand no chance of having their books selected for the scholarship courses for 1907, which will be published in August 1905.

CALCUTTA,
The 4th April 1905

A. FEDLER,
Director of Public Instruction, Bengal.

Statement showing the quantity of salt (private property) in bonded warehouses and afloat on the river Hooghly on the 31st day of March 1905, and transactions during the half month from the 16th to the 31st March 1905.

DESCRIPTION OF SALT.	IN BONDED WAREHOUSES IN CALCUTTA.				Quantity afloat	Grand Total.	TRANSACTIONS DURING HALF-MONTH FROM THE 16TH TO THE 31ST MARCH 1905, INCLUSIVE.			
	In private golas.	In Sulkea Government golas.	In Kidderpore Dock Government golas.	Total.			Quantity on which duty has been paid.	Manifested quantity arrived in the port of Calcutta.	Deliveries from shipboard for consumption and for inland bonded warehouses.	Deliveries from bonded warehouses for consumption and for inland bonded warehouses
		Mds.	Mds.	Mds.	Mds.	Mds.	Mds.	Mds.	Mds.	Mds.
United Kingdom—										
Liverpool and other Penang salt.	.....	2,97,540	6,16,156	9,13,696	63,150	9,76,846	2,51,751	2,20,799	1,12,898	1,89,894
Other European countries—										
Hamburg- Bremen salt.	.....	4,16,585	5,950	4,22,535	.....	4,22,535	66,990	...	.....	69,490
Ditto rock	.....	2,950	.....	2,950	.....	2,950	...	.....	.....	.....
Spanish salt	.....	9,550	6,540	16,190	1,95,311	1,91,471	2,600	1,76,111	.....	.....
Aden and Red Sea—										
Aden salt	.....	1,12,856	75,950	1,94,714	12,253	2,06,967	1,70,340	1,43,733	49,000	55,850
Salif salt	.....	2,62,250	.....	2,62,250	1,77,047	4,40,336	1,24,092	2,77,667	10,000	50,428
Do. rock salt	.....	15,140	.....	15,140	5,951	21,091	.....	13,611	.....	500
Rawayah salt	.....	2,09,975	.....	2,09,975	.....	2,09,975	14,400	.....	.....	10,500
Muscat and Persian Gulf—										
Muscat, Lingah and Hanjam salt.	.....	55,744	.....	55,744	.....	55,744		.....	.....	...
Ditto ditto rock salt	.....	2,644	.....	2,644	.....	2,644	300	.....	.....	300
British India—										
Bombay salt	.....	90,804	.....	90,804	.....	90,804	90,0[illegible]*	10,578	.....	24,225
Madras salt	.....	.....	.....	.....	.....	.....	....	.....	.....	.....
Cuvvada salt	.....	.....	...	.. .	.....	... .	.. ...	.....	.....	.....
Visagapatam salt ...	.....	.....	.....	.....	...	.....	.....	..	.....	.....
Other places—										
Madagascar salt	.....	.....	.....	.	.....	.....	.....	.....	.....	...
Total ..	.....	13,73,734	7,04,636	22,87,429	3,63,663	26,51,092	6,50,096	8,03,299	1,72,722	4,10,772

	Quantity in transit.
	Mds
Liverpool salt	2,250
Spanish ,, ...	14,440
Aden ,, ...	3,400
Salif ,, ...	20,750
Do. rock	1,570

Written off during the half-month—	Mds.
Wastage in private golas	Nil
Ditto in Sulkea golas	2,075
Ditto in Kidderpore Dock golas ...	3,008
Abandoned and destroyed	94

* This quantity passed free of duty, as the duty was paid at Bombay

By order of the Board of Revenue, L. P.,

B. FOLEY,

Offg. Collector of Customs.

CALCUTTA CUSTOM HOUSE, *the 11th April 1905.*

NOTIFICATIONS OF THE BOARD OF REVENUE.

No. 2140B.

NOTICE is hereby given that the Fifth Sale of Opium, the Provision of 1902-1903, will be held at the Government Opium Sale-room, No. 2 Bankshall Street, on Tuesday, the 2nd May 1905, at 11 A.M., and will comprise 4,000 chests, viz.—

		Chests.
Opium manufactured at the Patna Factory, consisting of	...	2,000
Ditto at the Ghazipur Factory, consisting of	...	2,000
Total	...	4,000

2nd.—The general conditions of the sale now advertised will be the same as usual. They may be ascertained by reference to the notification issued on the 22nd November 1904 and published in the *Government* and *Exchange Gazettes*, or on personal application at the office of the Board of Revenue.

3rd.—The latest dates for deposit and clearance will be the 8th and 17th May 1905, respectively, that is to say, no Bank of Bengal Receipts, Government Promissory Notes or other Public Securities that may be tendered for deposit in redemption of Promissory Notes given by purchasers in the sale-room will be received after 3-30 P.M. of Monday, the 8th May 1905, and no Bank of Bengal Receipts in full payment of lots will be accepted after 3-30 P.M. of Wednesday, the 17th May 1905.

4th.—In addition to the quantity above advertised for sale, the following quantities, more or less, of the opium manufactured at the Patna and Ghazipur Factories will be brought to sale between the sale now advertised and December next on or about the dates specified below The Board of Revenue, however, reserve to themselves the right of altering these dates, should circumstances render it expedient to do so:—

Patna.	Manufactured at the Patna Factory; about chests.	Manufactured at the Ghazipur Factory; about chests.	Total; about chests.
On or about Tuesday, 6th June 1905 ...	2,000	2,000	4,000
On or about Tuesday, 4th July „ ..	2,000	2,000	4,000
On or about Tuesday, 1st August „ ...	2,000	2,000	4,000
On or about Tuesday, 5th September „ .	2,000	2,000	4,000
On or about Tuesday, 26th September „ ...	2,000	2,000	4,000
On or about Wednesday, 1st November „ ...	2,000	2,000	4,000
On or about Tuesday, 5th December „ ..	2,000	2,000	4,000
Total ...	14,000	14,000	28,000

By order of the Board of Revenue, L. P.,

H. F. SAMMAN, *Offg. Secretary*

BOARD OF REVENUE, L. P., CALCUTTA, *the 27th March 1905.*

ELECTION OF MUNICIPAL COMMISSIONERS

NOTIFICATION.

IT is hereby notified for general information that under section 9, Act III (B.C) of 1885, Babu Balindra Singh Deb has been elected at the recent election for thana Indas as member of the Vishnupur Local Board.

E. H. WALSH, *Offg. Commissioner.*

BURDWAN COMMR.'S OFFICE, CHINSURA, *the 6th April 1905.*

NOTIFICATION.

IN supersession of this office notification dated the 9th February 1905 and published in the *Calcutta Gazette* of the 15th idem, it is hereby notified for general information that a bye-election under section 27 of Act III (B.C.) of 1884, for the purpose of electing a Commissioner for Ward No. 1 of the Pabna Municipality, in the district of Pabna, *vice* Revd. Punchanan Biswas, resigned, will be held on Monday, the 15th May 1905.

C. R. MARINDIN, *Commissioner.*

COMMR.'S OFFICE, RAJSHAHI DIVISION, *the 3rd April 1905.*

NOTIFICATION.

IT is hereby notified for general information that a bye-election will be held on Saturday, the 29th April, under section 27 of the Bengal Municipal Act, III (B.C.) of 1884, as amended by Act IV (B.C.) of 1894, in Ward No. IV of the Chapra Municipality, in the district of Saran, for the election of a Commissioner for that Ward in the place of Babu Jai Singh, deceased.

BRIJ BASSI SAHAY, *Peral. Asst., for Actg. Commr.*

PATNA COMMR.'S OFFICE, BANKIPORE, *the 7th April 1905.*

NOTIFICATION.

IT is hereby notified for general information that a bye-election will be held, under section 27 of the Bengal Municipal Act, III of 1884, as modified up to 1st November 1896, on Friday, the 9th June 1905, in Ward No. III of the Khirpai Municipality, in the district of Midnapore, to fill up the vacancy caused by the death of Babu Ram Dass Pahari, one of the elected Commissioners of the Municipality.

N. L. BAGCHI, *Peral. Asst., for Commr. on tour.*

COMMR.'S OFFICE, BURDWAN DIVN., CHINSURA, *the 8th April 1905.*

NOTIFICATION.

IT is hereby notified for general information that, under Rule 32 of the rules framed under section 138 (*a*) of the Bengal Local Self-Government Act, III of 1885 the Lieutenant-Governor is pleased to fix Monday, the 15th May 1905, as the date for holding a bye-election under section 19 of the Act in thana Egra, in the district of Midnapore, for the purpose of filling up a partial vacancy in the representation of that thana on the Contai Local Board caused by the removal of Babu Jogendra Nath Das Mahapatra.

J. N. ROY, for *Magistrate.*

MIDNAPORE MAGISTRATE'S OFFICE, *the 1st April 1905.*

NOTIFICATION.

IT is hereby notified for general information that, under Rule 32 of the rules framed under section 138 (*a*) of the Bengal Local Self-Government Act, III of 1885, the Lieutenant-Governor is pleased to fix Monday, the 15th May 1905, as the date for holding a bye-election under section 19 of the Act in thana Pataspur, in the district of Midnapore, for the purpose of filling up the partial vacancy in the representation of that thana on the Contai Local Board caused by the removal of Babu Debendra Nath Das Mahapatra.

J. N. ROY, for *Magistrate.*

MIDNAPORE MAGISTRATE'S OFFICE, *the 1st April 1905.*

NOTIFICATION.

UNDER Rule 21 (*b*) of the Dispensary Manual, it is hereby notified for general information that the following gentlemen have been appointed members of the Committee for the management of the Nilphamari Dispensary, in the district of Rangpur:—

1.	The Subdivisional Officer	...	*Ex-officio.*
2.	Munsif, 1st Court	...	
3.	,, 2nd ,,	...	
4.	Babu Dharanidhar Chakravertty	...	*Sub-Registrar.*
5.	,, Gopal Chandra Chatterji	...	*Pleaders.*
6.	,, Janaki Nath Biswas	...	
7.	,, Bireswar Gupta	...	*Muktear.*
8.	,, Ram Lal Shah	...	*Merchant.*

MANADA RANJAN SEN, *for Commissioner of Rajshahi.*

COMMR.'S OFFICE, RAJSHAHI DIVN., JALPAIGURI, *the 4th April 1905*

NOTIFICATION.

IT is hereby notified for general information that, under rule 21 (*b*) of the Dispensary Manual, the following gentlemen have been appointed members of the Committee for the management of the Charitable Dispensary at Joynagar, in the district of the 24-Parganas:—

1.	Babu Bamandeb Bhattacharjee, L.M.S.	5.	Babu Naraiu Das Chatterjee.
2.	,, Narendra Narain Dutt.	6.	,, Surendra Nath Mitter.
3.	,, Jogendra Nath Mukerjee, L.M.S.	7.	,, Bepin Behari De, B.L.
4.	,, Nando Gopal Dutt	8.	,, Debendra Nath Banerjee.
		9.	,, Ram Das Banerjee, B.A.
		10.	,, Apurba Krishna Sen.

CHANDI DAS GHOSH, *Pers. Asst.*, for *Commissioner.*

COMMR.'S OFFICE, PRESY. DIVN., CALCUTTA, *the 11th April 1905.*

NOTIFICATION.

IT is hereby notified for general information that under Rule 21 (*b*) of the Dispensary Manual, the following gentlemen have been appointed members of the Committee for the management of the Woodburn Hospital and Charitable Dispensary at Khulna, in the district of Khulna:—

1.	The Magistrate of Khulna	*Ex-officio.*
2.	The Senior Deputy Magistrate, Khulna	
3.	The Civil Surgeon, Khulna	
4.	The District Engineer, Khulna	
5.	The Chairman of the Khulna Municipality	
6.	Babu Amrita Lal Rahu.	
7.	,, Kunja Behari Chakrabertty.	
8.	,, Devendra Nath Sen.	
9.	Kazi Atwal Haq.	
10.	Rai Sahib Bankim Chandra Mazumdar	

E. W. COLLIN, *Commissioner.*

COMMR.'S OFFICE, PRESY. DIVN., CALCUTTA, *the 7th April 1905.*

NOTIFICATION.

It is hereby notified for general information, under Rule 21 (*b*) of the Dispensary Manual, that the following gentlemen have been appointed members of the Rajbari Charitable Dispensary Managing Committee, in the district of Faridpur, *vice* the gentlemen noted against their names:—

1. Babu Brajendra Kumar Chatterjee, M.A., B.L., *vice* Babu Jadab Chandra Sarkar.
2. Mr. D. H. Whalley, *vice* Babu Durga Nath Singh.
3. Maulvi Inamal Kabir, *vice* Babu Peary Mohan Sen.
4. Babu Bijoy Kumar Sen, *vice* Babu Bipin Behary Sen.

GUNGA N. ROY, *Personal Asst., for Commr.*

DACCA COMMR.'S OFFICE, *the 8th April 1905.*

NOTIFICATION.

It is hereby notified for general information, under Rule 21 (*b*) of the Dispensary Manual, that Babu Sita Nath Mukherji has been appointed a member of the Pangsa Charitable Dispensary Committee in the district of Faridpur, *vice* Babu Gopal Lal Mitra.

GUNGA N. ROY, *Personal Asst., for Commr.*

DACCA COMMR.'S OFFICE, *the 8th April 1905.*

NOTIFICATION.

It is hereby notified for general information that under section 43 of the Bengal Local Self-Government Act, III of 1885, Babu Jotindra Prasad Mitra, B.L., the present Sub-Manager of the Tippera Raj Estate, is appointed to be a Member of the Feni Union Committee, in the district of Noakhali, *vice* Babu Lalit Chandra Majumdar, resigned.

W. MAUDE, *Offg. Commissioner.*

COMMR.'S OFFICE, CHITTAGONG, *the 6th April 1905.*

The Calcutta Gazette.

WEDNESDAY, APRIL 12, 1905.

PART IA.

Orders and Notifications by the Government of India, &c.

[*Reprinted from the "Gazette of India."*]

The following orders, issued by the Government of India in the Military Department, are republished for general information.

R. W. CARLYLE,
Offg. Chief Secy. to the Govt. of Bengal.

Simla, the 7th April 1905.

PROMOTIONS.

INDIAN SUBORDINATE MEDICAL DEPARTMENT.

ASSISTANT SURGEON BRANCH.

Bengal Establishment.

No. 272.—The undermentioned fourth-class Assistant Surgeons having completed five years' service in that class to be third-class Assistant Surgeons, with effect from the 17th February 1905 :—

. . . . . .

Frederick Kendrick Holmes.

. . . . . .

VOLUNTEER CORPS.

APPOINTMENTS, PROMOTIONS AND RESIGNATIONS.

Northern Bengal Mounted Rifles.

No. 279.—Second-Lieutenant Ernest Friedlander Ford to be Lieutenant, *vice* Bennett, transferred to the Supernumerary List, with effect from the 1st March 1905.

3rd Cadet Battalion, Calcutta Volunteer Rifles.

No 282.—Captain Henry Patrick Blackburn resigns his Commission, with effect from the 9th January 1905.

H. B. B. WATKIS, *Colonel,*
for *Secy. to the Govt. of India.*

The Calcutta Gazette.

WEDNESDAY, APRIL 12, 1905.

PART IB.

ORDERS BY THE LIEUT.-GOVERNOR OF BENGAL.

MUNICIPAL AND LOCAL.

NOTIFICATIONS.

No. 11T.M.—The 6th April 1905.—It is hereby notified that, under section 59 of the Bengal Municipal Act, III of 1884, the Lieutenant-Governor approves the election by the Commissioners of the Meherpur Municipality, in the district of Nadia, of Babu Girish Chandra Sen to be their Chairman, during the absence, on leave, of Babu Ramani Mohan Mullik.

Nadia

No. 13T.M.—The 6th April 1905.—It is hereby notified that, under section 27 of the Bengal Municipal Act, III of 1884, the Lieutenant-Governor is pleased to appoint Mr. R. H. MacPherson to be a Commissioner of the Serampore Municipality, in the district of Hooghly, *vice* Mr. T. Jackson, resigned.

Hooghly.

No. 23T.M.—The 7th April 1905.—It is hereby notified that the Lieutenant-Governor is pleased to approve the election by the members of the Chuadanga Local Board, in the district of Nadia, under section 29 of the Bengal Local Self-Government Act, III of 1885, of Babu Jatindra Mohan Sinha to be their Chairman, *vice* Babu Suresh Chandra Sinha, resigned.

Nadia.

No. 27T.M.—The 7th April 1905.—Whereas a Notification No. 546M., dated the 28th January 1905, was published at pages 24-25, Part IB of the *Calcutta Gazette* of the 1st February 1905, declaring the intention of the Lieutenant-Governor to exclude from and include under the operation of Part IX of the Bengal Municipal Act, III of 1884, to certain portions of the Bhatpara Municipality, in the district of 24-Parganas, specified below, and whereas no objection has been raised to the proposal within one month from the date of the publication of the above notification within the Municipality, it is hereby notified for general information that, in the exercise of the power vested in the Local Government by section 221 of the Act, and in accordance with the recommendation of the Commissioners of the Bhatpara Municipality, made at a meeting, the Lieutenant-Governor sanctions the extension of the above provisions of the Municipal Act to the said portions of the above Municipality.

24-Parganas.

Under section 86 (*f*) of the Act the Lieutenant-Governor also sanctions the levy, by the Municipal Commissioners, of fees for the cleansing of private privies and cess-pools within the aforesaid portions of the said Municipality.

I. The boundaries of the portions to be excluded are the following :—

PLOT I.

North.—The Paper Mill boundary walls.
West.—The River Hooghly.
South.—The old burning ground road.
East.—The Ferry Fund road *alias* the Ghosepara District Board road.

PLOT II.

North.—The ground occupied by the North Alliance Jute Mills.
West.—The River Hooghly.
South.—The Senparaghat and its bye-lane.
East.—The Ferry Fund road *alias* the Ghosepara District Board road, and part of the new ferry ghat road and the Utterpara Chakrabutty Bagan road.

II. The boundaries of the portions to be included are the following:—
North.—The Shamnagar Railway station premises.
West.—The fencing of the Eastern Bengal State Railway.
South.—The Kowgachi Gur road.
East.—The Eastern Bengal State Railway fencing.

No 31T M.—The 7th April 1905.—It is hereby notified that the Lieutenant-Governor is pleased to approve the election by the members of the Serampore Local Board, in the district of Hooghly, under section 25 of the Bengal Local Self-Government Act, III of 1885, of Babu Hari Bhusan De to be their Chairman.

Hooghly.

No. 33T.M.—The 7th April 1905.—It is hereby notified that the Lieutenant-Governor is pleased to approve the election by the members of the Sadar Local Board, in the district of Hooghly, under section 25 of the Bengal Local Self-Government Act, III of 1885, of Babu Chandra Narain Roy to be their Chairman.

Hooghly

No. 39T.M.—The 7th April 1905.—It is hereby notified that, under section 59 (*a*) of the Bengal Municipal Act, III of 1884, as modified up to 1st November 1896, the Lieutenant-Governor approves the election by the Commissioners of the Rajpur Municipality, in the district of the 24-Parganas, of Babu Sreesh Chandra Roy to be their Chairman, *vice* Babu Upendra Nath Mitra, resigned.

24-Parganas.

No. 41T.M.—The 7th April 1905.—It is hereby notified that, under section 59 of the Bengal Municipal Act, III of 1884, the Lieutenant-Governor approves the election by the Commissioners of the Barasat Municipality, in the district of the 24-Parganas, of Babu Kunja Behari Bose to be their Chairman, *vice* Babu Bani Kanto Mukerjee, resigned.

24-Parganas.

No. 54T.M.—The 8th April 1905.—It is hereby notified that, under section 27 of the Bengal Municipal Act, III of 1884, the Lieutenant-Governor is pleased to appoint Babu Adhar Chandra Banerjee to be a Commissioner of the Bogra Municipality, in the district of Bogra, *vice* Babu Manmatha Kumar Bose, resigned.

Bogra.

No. 56T.M.—The 8th April 1905.—It is hereby notified that, under section 27 of the Bengal Municipal Act, III of 1884, the Lieutenant-Governor is pleased to appoint Mr. G. Cabral to be a Commissioner of the Uttarpara Municipality, in the district of Hooghly, *vice* Mr. P. G. Holmes.

Hooghly.

No. 58T.M.—The 8th April 1905.—It is hereby notified that the Lieutenant-Governor is pleased to approve the election by the members of the Manikganj Local Board, in the district of Dacca, under section 25 of the Bengal Local Self-Government Act, III of 1885, of Babu Kali Das Mukherjee to be their Chairman.

Dacca.

No. 60T.M.—The 8th April 1905.—It is hereby notified for general information that the Lieutenant-Governor intends, in the exercise of the power vested in the Local Government by section 86 (*b*) of the Bengal Municipal Act, III of 1884, and in accordance with the recommendation of the Commissioners of the Old Malda Municipality, in the district of Malda, made at a meeting, to sanction the levy by the Commissioners of the said Municipality of a fee, on the registration, under section 142 of the Act, of carts which are kept or are used in the ordinary course of business within, or which are let for hire within or without, the Municipality and are used in the ordinary course of business within the Municipality, at rates not exceeding those mentioned in section 143 of the Act, unless good reasons are shown to the contrary within one month from the date of the publication of this notification within the Municipality.

Malda.

No. 62T.M.—The 8th April 1905.—It is hereby notified that, under section 19 of the Bengal Local Self-Government Act, III of 1885, the Lieutenant-Governor is pleased to appoint Mr. E. B. T. Studd to be a member of the District Board of Muzaffarpur, *vice* Mr. E. J. C. Studd, resigned.

Muzaffarpur.

No 64T.M.—The 8th April 1905.—It is hereby notified that, under section 19 of the Bengal Local Self-Government Act, III of 1885, Mr. S. W. Goode has been elected by the members of the Hajipur Local Board, in the district of Muzaffarpur, to be a member of the Muzaffarpur District Board, *vice* Mr. T. S. Macpherson, resigned.

Muzaffarpur.

No. 66T.M.—The 8th April 1905.—Whereas a notification No. 379M., dated the 20th January 1905, was published at page 20, Part IB of the *Calcutta Gazette* of the 25th idem, declaring the intention of the Lieutenant-Governor to sanction the imposition by the Commissioners of the Rangpur Municipality, in the district of Rangpur, of a rate on the annual value of holdings within the Municipality in lieu of the tax on persons occupying holdings within the Municipality, and whereas no objection has been raised to the proposal within one month from the date of the publication of the above notification within the Municipality, it is hereby notified for general information that, in the exercise of the power vested in the Local Government by section 85 of the Act, and in accordance with the recommendation of the Commissioners of the Rangpur Municipality, made at a meeting, the Lieutenant-Governor sanctions the imposition of the said rate within the above Municipality in lieu of the tax upon persons occupying holdings within the Municipality at present in force in that Municipality.

Rangpur.

No. 70T.M.—The 8th April 1905.—It is hereby notified that, under section 19 of the Bengal Local Self-Government Act, III of 1885, the Lieutenant-Governor is pleased to appoint Babu Bidhu Ranjan Majumdar to be a member of the Sadar Local Board, in the district of Pabna, *vice* Babu Gokul Chandra Majumdar, resigned.

Pabna.

No. 75T.M.—The 8th April 1905.—It is hereby notified that, under section 19 of the Bengal Local Self-Government Act, III of 1885, the Lieutenant-Governor is pleased to appoint Thakur Pratap Narain Deo to be a member of the Banka Local Board, in the district of Bhagalpur, *vice* Thakur Jagadamba Prosad Singh, deceased.

Bhagalpur.

E. A. GAIT,
Offg. Secy. to the Govt. of Bengal.

The Calcutta Gazette.

WEDNESDAY, APRIL 12, 1905.

PART II.

Advertisements.

[N. B.—Advertisements, Notices, &c., intended for insertion in this part of the Gazette cannot be received after Noon on Monday.]

LAND SALE NOTICES.

Notification A.

NOTICE is hereby given, under sections 6 and 13, Act XI of 1859, that the undermentioned estates and shares of estates in the district of Chittagong will be put up for sale at the office of the Collector of that district on the 1st May 1905 at 12 A.M. for arrears of revenue and other demands, which by law are realisable as arrears of land revenue.

When in columns 6, 7 and 9 of the appended statement it is stated that only a share is to be sold, it is to be understood that a separate account is kept for that share.

Tauzi No.	Name of mahal and pargana.	Sadar jama of whole estate.	Whether the whole estate is to be sold.	If only a share is to be sold, specification of such share or shares.	Names of proprietors of property to be sold.	If only a share is to be sold, the sadar jama of such share.	If the whole estate is to be sold, the arrears due from it.	If only a share is to be sold, the arrears due from it.
1	2	3	4	5	6	7	8	9
		Rs. A. P.				Rs. A. P.	Rs. A. P.	Rs. A. P.
391 391 367	Thana Satkania, taraf mauza Amirabad.	1,401 13 3	A share is to be sold.	Only the residuary share No. 2.	Taran Sinha Hazari and Srimati Golap Kumari.	908 15 8	.....	294 1 2
1178 1181 [illegible]	Thana Zorwargunge, taraf Doulat Shafi.	833 9 6	The whole estate is to be sold.	.....	Shaik Mokbul Ahamed Chowdhury and Oli Ahamed Chowdhury	.....	0 2 0	.....
1278 1283 1017	Thana Satkania, mauza Garangya Baboita, taraf Mungal Rath Hazari.	2,015 5 9	A share is to be sold.	Only the residuary share No. 2.	Taran Sinha Hazari	1,[illegible] 12 9	.....	[illegible] 12 5
1856 1861 1467	Thanas Patya, Satkania, Fatickchari and Hathazari, taraf Kurim Khan.	715 12 0	The whole estate is to be sold.	...	Anowar Ali ...	.....	177 12 0	.....
3429 3447 2954	Thanas Chakoria, Patia, Rouma and Town, taraf Ram Sundar Kanangoe.	849 6 6	A share is to be sold.	Only the residuary share No. 2.	Salamot Ali Khan Choudhury, Sher Ali Khan Choudhury and others.	671 6 3	.	169 12 3
28373 28710 [illegible]	Thana Chakoria, mauza Shurarpur, zaimi taluk Srimoti Thanda Bibi Fabeita, taluk Shermosta Khan.	[illegible] 12 0	The whole estate is to be sold.	.....	Prasana Kumar Rai	..	290 4 9	.....

NOTE.—The figures shown in columns 8 and 9 indicate the arrears remaining unpaid on the 25th February 1905.

Chittagong Collectorate, the 20th March 1905

F. P. DIXON, Collector.

Notification A.

NOTICE is hereby given, under sections 6 and 13, Act XI of 1859, that the undermentioned estates and shares of estates in the district of Cuttack will be put up for sale at the office of the Collector of that district on the 22nd day of May 1905 at 8 A. M. for arrears of revenue and other demands which by law are realizable as arrears of land revenue.

When in columns 5, 7 and 9 of the appended statement it is stated that only a share is to be sold, it is to be understood that a separate account is kept for that share.

Tauzi No.	Name of mahal and pargana.	Sadar jama of whole estate.	Whether the whole estate is to be sold.	If only a share is to be sold, specification of such share or shares.	Names of proprietors of property to be sold.	If only a share is to be sold, the sadar jama of such share.	If the whole estate is to be sold, the arrears due from it.	If only a share is to be sold, the arrears due from it.
1	2	3	4	5	6	7	8	9
		Rs. A. P.				Rs. A. P.	Rs. A. P.	Rs. A. P.
813	Pargana Alti, tape Sahajahanpur.	.	.....	Kismat 6a. 4p. 16kt. ... . The remaining interest 9a. 7p. 4kt. in each of the mauzas of the estate is excluded from sale.	Babu Balaram Bhramarber Rai and others.	4,630 0 0	.	2,314 13 0
1818	Pargana Baruan, taluk Radhamohan Prasad.	.....	.....	Kismat 8a. 9p. 18kt. 15b. 16g. 2c. 3bed. The interest comprised in entire mauzas Dharpur, Saisindha, Narpur, Kabirpur, Maheswarpur, Uper Baruan, Nilkanthapur, Deulpara, Kakurikud, Bhagabatipur, Swainkhand, Meendha are excluded from sale.	Balaram Sahu and others.	4,049 4 0	.....	169 5 3
36	Pargana Jajpur, taluk Sunderpur.	1,692 5 9	Whole ...	.....	Kangoi Dinabandhu Baliar Singh and others.	.....	396 7 8	.....
65	Pargana Jajpur, taluk Bhimkerpur.	.....	.....	13a. 9p. 17kt. 2b. excludes 2a. 2p. 2kt. 14b. in each of the mauzas of the estate.	Dasarathi Senapati and others.	665 2	.....	164 14 2

Cuttack Collectorate, the 28th March 1905

F. N. FISCHER, Collector.

Notification A.

NOTICE is hereby given, under sections 6 and 13, Act XI of 1859, that the undermentioned estates and shares of estates in the district of Jalpaiguri will be put up for sale at the office of the Collector of that district on the 20th May 1905 at 12 A. M. for arrears of revenue and other demands, which by law are realisable as arrears of land revenue.

When in columns 5, 7 and 9 of the appended statement it is stated that only a share is to be sold, it is to be understood that a separate account is kept for that share and that the other share or shares in the estate are excluded from the sale.

Tauzi No.	Name of mahal and pargana.	Sadar jama of whole estate.	Whether the whole estate is to be sold.	If only a share is to be sold, specification of such share or shares.	Names of proprietors of property to be sold.	If only a share is to be sold, the sadar jama of such share.	If the whole estate is to be sold, the arrears due from it.	If only a share is to be sold, the arrears due from it.
1	2	3	4	5	6	7	8	9
		Rs. A. P.					Rs. A. P.	
[illegible]	Bhutan-Duars, II, pargana Bhatibari.	766 8 0	Whole .	.	The Ryduck Tea Syndicate, Limited	.....	Land Revenue .. [illegible] 4 0 Road and Public Works Cess 42 11 6 Dâk cess . 5 12 0 451 11 6	

Jalpaiguri, the 3rd April 1905.

J. F. GRUNING, Deputy Commissioner.

Notification B.

NOTICE is hereby given, under sections 5 and 18, Act XI of 1859, that unless the arrears mentioned below are paid on or before the next latest date of payment, viz., the 28th April 1905, the undermentioned estates or shares of estates in the district of Puri will be put up for sale at the office of the Collector of that district on the 10th July 1905 at 12 o'clock noon for the said arrears.

When in columns 5, 7 and 9 of the appended statement it is stated that only a share is to be sold, it is to be understood that a separate account is kept for that share, and that the other share or shares in the estate not specifically mentioned in column 5 are excluded from the sale.

Tauzi No.	Name of mahal and pargana.	Sadar jama of whole estate.	Whether the whole estate is to be sold.	If only a share is to be sold, specification of such share or shares.	Names of proprietors of property to be sold.	If only a share is to be sold, the sadar jama of such share.	If the whole estate is to be sold, the arrears due from it.	If only a share is to be sold, the arrears due from it.	Nature and amount of demand for which to be sold.
1	2	3	4	5	6	7	8	9	10
		Rs. A. P.		A. P.		Rs. A. P.	Rs. A. P.	Rs. A. P.	
165/2	Killah Rupas, pargana Athais	1,689 0 0	....	Kismat ... 9 4	Trilochan Chaudhuri and others.	985 5 0	....	491 11 0	Due for kist April 1905.
166/1	Ta. Ganeswarpur, pargana Banchas.	1,619 0 0	.....	" ... 9 0	Baladev Prakas Bramhachari.	910 11 0	.....	455 0 0	Ditto.
166/2	Ditto ...	1,619 0 0	.....	" ... 7 0	Chandra Moni Debya, mother and guardian of Hanuman Khentia.	708 5 0	.....	354 0 0	Ditto.
66	Ma. Durgadaspur, pargana Kotrahang.	879 0 0	Whole ...	.....	Raja Makund Dev ...	... ..	439 0 0	.....	Ditto.
79/6	Ma. Thanthana, pargana Kotrahang.	653 0 0	.	Kismat ... 13 0	Dinabandhu Pain, brother and guardian of Gopi Nath Pain and others.	530 9 0	...	264 14 0	Ditto.
347/1	Ta. Amuri, pargana Purbadual.	1,216 0 0	....	" ... 8 0	Nayanmali Jemadie, mother and guardian of Durga Charan Jagadeb Rai.	608 0 0	.	304 0 0	Ditto.
347/2	Ditto ...	1,216 0 0	.	" .. 8 0	Radha Mohan Rai ...	608 0 0		304 0 0	Ditto.

Puri Collectorate, the 7th April 1905.

J. R. BLACKWOOD, Collector.

Notice of Sale for Arrears of Revenue.

NOTICE is hereby given, under section 6, Act XI of 1859, Act VII (B.C.) of 1868 and Act II (B.C.) of 1871, that the undermentioned tenures in the Satkania khas mahal, in the district of Chittagong, will be put up to public and unreserved sale at the Collector's office of that district on the 27th day of April 1905 for arrears of rent and cesses remaining unpaid on the 25th February 1905.

No. of tenure.	Name of tenure with its situation.	Name of proprietor.	Annual jama.		Amount of arrears for which the tenure is to be sold.		
			Rent.	Cesses.	Rent.	Cesses.	Total.
			Rs. A. P.	Rs. A. P.	Rs. A. P.	Rs. A. P.	Rs. A. P.
24/1828	Thana Satkania, at present Banakhali, mauza Nakora, mahal Noabad, hal taluk Raj Kumar Roy.	Mohesh Chandra Bhattacherji ...	1,139 0 0	127 0 6	157 2 0	17 10 6	174 12 6
17/[illegible]	Thana Banakhali, mauza Chambal, mahal Noabad, taluk Tajanessa.	Sm. Jobeda Khatoon herself and on behalf of minor sons Abdul Karim, Abdul Rahim, Abdul Salim and Abdul Khalek and daughter Sm. Jalloot Khatoon.	1,254 4 0	161 9 6	732 14 0	60 9 6	793 7 6
5415/4796	Thana Satkania, mauza Sarchatia, mahal Noabad, taluk Lal Mahomed Daroga	Girija Kripa Lala and Sarada Kripa Lala	1,082 12 0	101 13 6	395 11 6	38 3 3	433 14 9
[illegible]	Thana Satkania, mauza Chunate, mahal Noabad, taluk Fazarali Khan.	Salamat Ali Khan and Srimati Asharaf Bibee.	907 2 0	28 4 0	336 11 6	8 5 6	347 1 0

Chittagong Collectorate, the 14th March 1905.

F. P. DIXON, Collector.

Notice of Sale for Arrears of Revenue.

NOTICE is hereby given, under section 6, Act XI of 1859, read with Act VII (B.C.) of 1868 and Act II (B.C.) of 1871, that the undermentioned Noabad taluks within the Cox's Bazar khas mahal, in the district of Chittagong, will be put up to public and unreserved sale at the Collector's office of that district on the 28th April 1905 for arrears of rent and cesses remaining unpaid on the 25th February 1905 :—

No. of tenure.	Name of mauza, thana, and mahal	Name of Talukdar.	Sadar Jama.		Amount of arrears for which the tenure is to be sold.		
			Rent.	Cesses.	Rent.	Cesses.	Total.
1			Rs. A. P.	Rs. A. P.	Rs. A. P.	Rs. A. P.	Rs. A. P.
1361 / 159-3	Mauza Teknaf, thana Teknaf, taluk Fate Chowdhuri.	Khema Chowdhuri and Nhaboke Chowdhuri and others.	1 374 6 0	52 10 6	691 11 0	17 8 9	709 3 9
78 / 101	Mauza Patili Machuakhali, thana Ramoo, taluk Shamadali.	Nur Mahammad	901 2 0	110 8 0	434 1 0	36 13 0	470 14 0
89 / 131	Mauza Kharulia, thana Ramoo, taluk Khayerullah.	Kamala Kanta Sen	676 8 0	69 12 0	283 10 3	23 4 0	276 14 3
103 / 136	Mauza Chakmookul, thana Ramoo, taluk Kaloo and Kamarali.	Jagat Chandra Bahaddar	1,268 12 0	114 7 6	834 0 0	39 2 6	Paid. 872 2 6
119 / 153	Mauza Nunachari, thana Ramoo, taluk Gouri Sankar and Bodya Nath Kanungoe.	Golam Bari and Golam Kiberia and others.	893 1 0	73 11 6	222 4 0	24 8 9	246 12 9
193 / 250	Mauza Bharualhali, thana Ramoo, taluk Mahammad Raja.	Sm. Arapazamal herself and for her minor sons Abu, Sanojjama, Kamaljama and Manhajjama and Sm. Golapra herself and her minor sons Parok Ahamad and others.	1,106 4 0	141 13 6	484 2 0	47 4 0	531 6 0
306 / 364	Mauza Joarianala, thana Ramoo, taluk Golamali.	Aktar Kamal Chowdhuri	673 0 0	86 7 0	286 8 0	28 13 9	305 4 9
246 / 299 / 249	Mauza Manikpur, thana Chakaria, taluk Tholiafuroo.	Sm. Dinendra Kumari	869 0 0	110 8 6	322 4 0	36 12 0	358 0 6
279 / 274 / 365	Mauza Bhoolamanikghar, thana Chakaria, taluk Bibi Sprak.	Asmat Ali and Jaha Bax	1,379 8 0	173 0 0	592 6 0	57 15 0	650 5 0
293 / 292-295 / 360	Mauza Paharchanda, thana Chakaria, taluk Bibi Sprak.	Beni Madhab Sen	1,900 8 0	140 12 6	743 1 10	49 14 10	793 0 8
296 / 78-308 / 364-366	Mauza Teltong, thana Chakaria, taluk Haridas Bahaddar, Har Chandra and Nabin Chandra.	Nezamat Ali Chowdhuri	1,433 14 0	191 6 6	539 9 0	63 12 6	603 3 6
299 / 45-299 / 466-3499	Mauza Battali, thana Chakaria, taluk Hari Dass Bahaddar.	Nezamat Ali	363 4 6	44 4 6	133 11 0	14 12 0	203 7 0
306 / 293 / 302	Mauza Rajakhali, thana Chakaria, taluk Bibi Sprak.	Nezamat Ali Chowdhuri	1,003 10 6	215 18 6	497 11 9	136 14 6	634 16 3
315 / 1	Mauza Patali, Machuakhali, thana Ramoo, Estmam, Sm. Maymuna Khatun and Khorshed Ali.	Sm. Maymuna Khatun Chowdhurin and Khorshed Ali Chowdhuri.	614 6 0	19 3 6	3,236 10 0	97 10 6	3,350 4 6

The 15th March 1905.

F. P. DIXON, Collector.

Notice of Sale for Arrears of Revenue.

NOTICE is hereby given, under section 6, Act XI of 1859, read with Act VII (B.C.) of 1868 and Act II (B.C.) of 1871, that the undermentioned Noabad taluks within the Sadar khas mahal, in the district of Chittagong, will be put up to public and unreserved sale at the Collector's office at that district on the 27th day of April 1905 for arrears of rent and cesses remaining unpaid on the 25th February 1905.

No. of taluk.	Name of taluk with its situation.	Name of proprietor.	Sadar Jama.		Arrear.	
			Rent.	Cess.	Rent.	Cess.
483 / 291-56	Mauza Bakalia, thana Town, mahal Noabad, taluk Ahamed Ali.	Abdul Rahaman and others	Rs. A. P. 1,206 4 0	Rs. A. P. 236 8 6	Rs. A. P. 424 12 0	Rs. A. P. 80 7 0
4737 / 23679	Mauza Jujkhala, thana Patiksary, mahal Noabad, taluk Har Ali Khan.	Obedar Rahaman Khan	3,356 4 0	166 12 0	903 8 0	42 13 9
4871 / 24021	Mauza Bhoolpur, thana Patiksary, mahal Noabad, taluk Har Ali Khan.	Nipruchalman Raja	705 0 0	36 13 0	263 10 0	13 12 9

The 14th March 1905.

F. P. DIXON, Collector.

Notice of Sale for Arrears of Revenue.

NOTICE is hereby given, under section 6, Act XI of 1859, read with Act VII (B.C.) of 1868 and Act II (B.C.) of 1871, that the undermentioned Noabad taluks within the Patia khas mahal, in the district of Chittagong, will be put up to public and unreserved sale at the Collector's office of that district on the 26th April 1905, for arrears and cesses remaining unpaid on the 28th February 1905:—

No. of tenure.	Name of mauza, thana and mahal.	Name of Talukdar.	Sadar Jama.		Amount of arrear for which the tenure is to be sold.		
			Rent.	Cesses.	Rent.	Cesses.	Total.
14141 19387	Thana Patia, mauza Charchhanagar, mahal Noabad, taluk Ochman Sadar, Eakup.	Raj Chandra Sen, son of Ram Kishore Sen of Sonhara and Sharifatulla Sadadar.	Rs. A. P. 520 0 0	Rs. A. P. 14 13 0	Rs. A. P. 195 2 0	Rs. A. P. 5 9 0	Rs. A. P. 200 11 0

The 14th March 1905.

F. P. DIXON, Collector.

Notice of Sale for Arrears of Revenue.

NOTICE is hereby given, under section 6, Act XI of 1859, read with Act VII (B.C.) of 1868 and Act II (B.C.) of 1871, that the undermentioned Noabad taluk, within the Raozan khas mahal, in the district of Chittagong, will be put up to public and unreserved sale at the Collector's office of that district on the 26th April 1905 for arrears of rent and cesses remaining unpaid on the 25th day of February 1905:—

No. of taluk.	Name of taluk with its situation.	Name of proprietor.	Sadar Jama.		Amount of arrears for which the taluk is to be sold.		
			Rent.	Cesses.	Rent.	Cesses.	Total.
1 23939	Thana Fatikchary, mauza Hapania, mahal Noabad, taluk Farad Jafar.	Nepruchain Munr Raja, son of Mathu Chowdhuri, of Manikchery, in Hill Tract, Chittagong.	Rs. A. P. 894 10 6	Rs. A. P. 67 9 6	Rs. A. P. 446 10 6	Rs. A. P. 25 9 0	Rs. A. P. 472 3 6

Chittagong Collectorate, the 14th March 1905.

F. P. DIXON, Collector.

Statement of the Affairs of the Bank of Bengal for the week ending 4th April 1905.

LIABILITIES.

	Rs.	A.	P.
Capital paid up	2,00,00,000	0	0
Reserve Fund	1,32,00,000	0	0
Public Deposits at Head Office Rs. 66,46,755 13 11			
Ditto ditto at Branches „ 1,00,06,050 13 6	1,66,52,806	11	5
Other Deposits at Head Office and Branches	11,25,26,844	7	8
Bank Post Bills, &c.	27,05,031	1	4
Sundries	27,80,816	9	4
Rupees	16,78,68,498	13	9

ASSETS.

	Rs.	A.	P.
Government Securities	1,27,20,530	1	11
Other authorised investments	80,04,388	13	8
Loans on Government and other authorised securities	3,62,06,565	7	5
Accounts of Credit on ditto ditto	1,97,22,101	6	10
Bills discounted and purchased	3,46,55,026	7	4
Balances with other Banks	13,81,256	3	10
Bullion	...		
Dead Stock	18,17,295	5	10
Stamps	13,323	3	5
Sundries	13,53,344	2	0
	11,53,73,836	4	3
Cash and Currency Notes at Head Office* Rs. 3,09,35,509 14 8			
Cash and Currency Notes at Branches† „ 2,10,09,162 10 10	5,19,94,672	9	6
Rupees	16,78,68,498	13	9

* Includes Sovs. & ½ Sovs., value Rs. 6,30,869 0 0
† Do. do. do. „ 1,34,073 8 0
Rs. 8,04,712 8 0

H. TREBLE,
Offg. Chief Accountant.

By order of the Directors,
W. D. CRUICKSHANK,
Secretary and Treasurer.

Rate for Demand Loans 6 per cent.
Percentage 38·61.

BANK OF BENGAL,
Calcutta, 6th April 1905.

(390—1)

Notice.

PURSUANT to the orders of Government, dated the 29th June 1881, particulars of the undernoted items of articles held by the Port Commissioners as Receivers of Wrecks, each article being of value above Rs. 100, are published for general information in accordance with the provisions of section 76, Act VII of 1880:—

Date.	Recovery No.	Description of articles.	Weight.	Approximate value.	Where recovered.	Where lying.
1905.			Cwt. qrs. lbs.	Rs.		
8th March ...	19 P.A.	One stockless anchor ...	60 0 0	850	North of Upper Kulpee Buoy.	On board the A. V. *Vulcan*.
		Chain 2½" of 70 fathoms	152 2 0			

F. A. LOVELL, for Deputy Conservator.

Port Commissioners' Office, Calcutta, the 13th March 1905. (282—3)

In the Court of the Subordinate Judge of Dinajpur.

MONEY EXECUTION CASE No. 7 OF 1905.

Bibi Rokeya Khatun, decree-holder, *versus* Moinuddin Ahamed and others, judgment-debtors.

[Amount due, Rs. 4,420-7-6.]

THREE annas 7 gandas 1 kara and 1 kranti right of judgment-debtors of pargana Bhuihara, 1st Joypur, district Dinajpur, bearing tauzi No. 491. Annual sadar jama Rs. 2,770-11-3.

Approximate value Rs. 500 as stated by the decree-holder.

The above property will be sold by the Nazir of the District Judge's Court, Dinajpur, at 12 noon of the 1st May 1905.

UMA CHARAN KAR,
Offg. Subordinate Judge.

Dinajpur, the 3rd April 1905. (391—1)

ADVERTISEMENT.

In the Court of the Subordinate Judge of Rajshahi.

EXECUTION CASE No. 53 OF 1903 (MORTGAGE).

Chandra Nath Mozumder, decree-holder, *versus* Shara Khatoon and others, judgment-debtors.

NOTICE is hereby given that the undermentioned property of the judgment-debtors will be sold at public sale in the Court premises by the Nazir of the District Judge of Rajshahi on the 15th April 1905 at 12 A.M. for the realisation of Rs. 6,826-3-6 only in execution of the above decree:—

Sixteen annas share of debi Kholaisarea, pargana Bhaturesh, tuppa Chapeela, station and sub-registry Nator, bearing tauzi No. 432 of the Rajshahi Collectorate. Revenue payable for the mahal Rs. 2,946-6 (including police tax).

RADHA NATH SEN,
Subordinate Judge.

Boalia, the 4th April 1905. (382—1)

In the 3rd Court of the Subordinate Judge of Patna.

EXECUTION CASE No. 73 OF 1903.

Babu Raj Keshwar Prasad Narayan Singh, minor, through Babu Girja Prasad, General Manager, Patna Court of Wards, decree-holder, *versus* Beroo Garain, Pemraj Garain, Khedru Garain, Pukhan Garain and Chhotoo Garain and Bansi Garain, minors under the guardianship of the said Khedru Garain and Kheran Garain, Beranchi Garain, Meghan Garain and Chawa Garain, of mauza Haidar Chak, pargana Biswak, district Patna, judgment-debtors.

THE following properties of the said judgment-debtors shall be sold for recovery of Rs. 1,431-9-6 by the Nazir of the District Judge of Patna in the sale-room of the said Court at 6 A.M. of the 15th May 1905:—

(1) 5 annas 4 pies out of 16 annas proprietary right, asli mai dakhli, of mauza Haidar Chak Maisra, mauza Kashmiri Chak, pargana Beswak, district Patna, bearing tauzi No. 804 and sadar jama Rs. 63 10-3, valued at Rs. 1,000.

(2) 5 annas out of 16 annas ijaradari right with zarpeshgi of mauza Pawara, pargana Pillich, district Patna, bearing tauzi No. 136 and sadar jama Rs 872-12; the ijara money of the judgment-debtors share by ijara deed, dated the 22nd November 1893, executed by Lachman Prasad Singh and Lachmi Prasad Singh up to 1310 F. S. is Rs. 4,375, valued at Rs. 4,375.

RAJ KISHNA BANERJEE,
Offg Subordinate Judge.

Bankipore, the 5th April 1905. (401—1)

In the Court of Babu Nalin Nath Mitra, Subordinate Judge, 1st Court Muzaffarpur.

EXECUTION CASE No. 33 OF 1905

Mr. W. C. G. Oman, decree-holder, *versus* Babu Mathura Pershad, judgment-debtor.

THE following property will be sold by the Nazir of the District Judge's Court in the Court premises on the 15th May 1905 at 12 noon for realization of Rs. 1,103-1-6:—

Four annas out of 16 annas kham Government partitioned patti of mauza Tengraha Goshainpur Maharani Bibi, asli and dakhli, pargana Marwah Kallan, bearing tauzi No. 4540, appertaining to thana, Sub-Registry, sub-division and district Muzaffarpur. The area of the entire mahal is 1,061 acres 3 roods 36 poles, and the proportionate area of the share to be sold is 265 acres 1 rood 39 poles. The sadar jama of the entire mahal is Rs. 992-8-10, and the proportionate sadar jama of the share to be sold is Rs 248 2-2½. Be it known that the entire mortgage property is incumbered under Rs 10,000, due to Mr. M. N. Macloude, deceased, and the property will be sold subject to the said incumbrance.

Regard being had to the incumbrance, the value of the property is Rs. 800 Be it also known that in the said mauza the judgment-debtor's share is 16 annas, but regard being had to the decretal amount, only annas share will be sold.

NALIN NATH MITTRA, Subordinate Judge.

Bhagalpur, the 6th April 1905. (4 2—1)

NOTICE.

In the Court of the 3rd Munsif, Alipore.

BE it known to all whom it may concern that Sekh Kudrutulla and six other persons have filed a suit (No 204 of 1905, Title) in this Court on the 14th of February last on behalf of the Muhammadan community of Bahargarh and adjoining villages, situate within the thana of Budge-Budge, against Khairat Ali Molla and others for the declaration of the validity of a certain *waqf* which has for long been in existence and for the cancellation of a conveyance and a *maurasi* lease executed by the aforesaid Khairat Ali Molla and others in respect of some property covered by the aforesaid *waqf* and lying in the village of Baujanhere, and have also asked for permission, under section 30 of the Civil Procedure Code, to sue on behalf of the aforesaid Muhammadan community of Bahargarh and its neighbourhood who are said to be interested in the *waqf* adverted to

The application for permission to sue on behalf of the above Muhammadan community will be finally heard on the 25th of April current.

PANKAJA KUMAR CHATTERJEE, 3rd Munsif

Alipore, the 7th April 1905. (403—1—246)

Notification of Sale.

TO be peremptorily sold by the Registrar of the High Court of Judicature at Fort William in Bengal in its Ordinary Original Civil Jurisdiction in his sale-room in the Court house on Saturday, the 15th day of April 1905, at the hour of 12 o'clock, pursuant to a decree and an order of the said Court made in suit No. 48 of 1903 (wherein Bhut Nath Chuckerbutty is plaintiff and Rajah Sir Sourindra Mohun Tagore, Knight, C.I.E., and others are defendants), and dated, respectively, the 19th day of March 1903 and 17th day of May 1904, all that the life interest of the said defendant, Rajah Sir Sourindra Mohun Tagore, and the vested reversionary interest of the defendants Shyama Kumar Tagore and Siboo Kumar Tagore in the two-thirds part or share of and in the undermentioned properties:—

Lot I.—All that partly two and partly three-storied brick-built house and premises formerly No. 9-4 Brojo Dulal's Street, at present No. 6 Khelat Chunder Ghose's Lane, North Division, in Calcutta, containing by measurement 2 cottahs and 2 chittaks of land according to Surveyor's report and being in Sootanutty revenue free, and butted and bounded in manner following, that is to say, on the north by premises No. 5 Khelat Chunder Ghose's Lane, west by municipal sewer and ditch, south by premises No 7 Khelat Chunder Ghose's Lane, on the east by Khelat Chunder Ghose's Lane.

Lot II.—All that partly two and partly three-storied house and premises formerly No. 9-3 Brojo Dulal's Street, at present No. 10 Khelat Chunder Ghose's Lane, Calcutta, and containing by measurement 2 cottahs and 1 chittak of land according to Surveyor's report, and being in Sootanutty revenue free, and butted and bounded in manner following, that is to say, on the north by premises No. 10-1 Khelat Chunder Ghose's Lane, and on the west and south by Khelat Chunder Ghose's Lane and on the east by the dwelling-house of Ashutosh Mullick and others.

Lot III.—All that two-storied brick-built house and premises formerly No. 9-3 Brojo Dulal's Street, Calcutta, at present No. 10-1 Khelat Chunder Ghose's Lane, containing by measurement 0 chittaks and 38 square feet of ground according to Surveyor's report, being in Sootanutty revenue free, bounded on the north by a passage leading to the premises No. 16 Khelat Chunder Ghose's Lane, on the south by the premises No 10 Khelat Chunder Ghose's Lane, on the east by the dwelling-house of Ashutosh Mullick, and on the west by Khelat Chunder Ghose's Lane.

Lot IV.—All that two-storied and partly three storied house and premises situate at, lying and being premises formerly No 9-3 Brojo Dulal's Street, at present No. 17 Khelat Chunder Ghose's Lane in Calcutta, and containing by measurement according to Surveyor's report 12 chittaks and 4 square feet of land, being in Sootanutty revenue free, and bounded in manner following, that is to say, on the north partly by the house of the late Haro Prosad Banerjee and partly by a sewer ditch to the north of which is the dwelling-house of the said Haro Prosad Banerjee, on the east by a sewer ditch, on the west by a narrow lane between these premises and Haro Prosad Banerjee's house, and on the south by Khelat Chunder Ghose's Lane.

The abstract of title and conditions of sale may be seen at the office of the Registrar, High Court, Original Side, and also at No. 7 Old Post Office Street, the office of Babu Akshoy Kumar Thakur, the attorney for the plaintiff hereon, on any day before the sale and will be produced at the sale.

W. R. FINK, Registrar.

Akshoy Kumar Thakur, Plaintiff's Attorney.

Calcutta High Court, Original Side, the 5th January 1905. (261—1—244)

Notice

IS hereby given that the undermentioned deposits outstanding in the Office Register of the Executive Engineer, Northern Drainage and Embankment Division, will, with the sanction of the Superintending Engineer, South-Western Circle, be credited to Government, unless claims thereto are submitted to his office and substantiated within one month from date:—

Date of deposit.	Name of depositor.	Amount of deposit.
	Surjopur.	Rs. A. P.
July 1887	Sree Nath Mukerjee	50 0 0
January 1900	Port Commissioners, Calcutta	15 15 3
November 1897	Received from the Collector of 24-Parganas for repairing sluice gate in Government embankment.	20 0 0
	Beyberiah.	
August 1896	Ijatulla Molla and others	100 0 0
,, 1900	Behary Lal Sarker and Mohendra Nath Das.	30 0 0
March 18 2	Mothur Mohan Halder	16 7 0
,, 1896	Messrs. Isman Chanera Dey & Co. ...	4 1 3
	Edulpore.	
October 1896	Nanda Lal Chatterjee, of Bondipur ...	10 0 0
January 1897	Bhabani Charan Sing Roy and others, of Naschpore.	10 0 0
,, ,,	Adhar Chandra Banik and others, of Pallempore.	10 0 0
February ,,	Rani Madhab Chatterji and others, of Rasul.	10 0 0
August ,,	Romesh Chandra Bhattacharji, of Ramnagore.	10 0 0
,, ,,	Annoda Prosad Sing Roy, of Kamdebpore.	10 0 0
,, 1896	Rakhal Das Mazumdar and others, of Joyna ore.	10 0 0
,, ,,	Saik Entaz, of Kamrudpore	10 0 0
,, ,,	Basanta Kumar Sen, of Torah ...	10 0 0
,, ,,	Naryan Chandra Chakerbutty and others, of Morali.	10 0 0
,, ,,	Girish Chandra Santra, of Ramnagore	10 0 0
,, ,,	Kanik Chandra Das and others, of Kumragoney and Monirmpore.	10 0 0
,, ,,	Bacharam Das, of Baruipore	10 0 0
,, ,,	Girish Chandra Das, of Kalna	10 0 0
March 1 01	Chairman, District Board, Hooghly .	56 6 7
June 1899	Debendra Nath Mittra, of Jongram ...	163 0 0
October 1901	Kali Das Mazumdar	200 0 0
June 1898	Received from the Collector of Burdwan on account of land charges for Raniuni project.	362 5 9

B. M. MITRA,
Executive Engineer, Northern Drainage and Embankment Division.

Calcutta, the 4th April 1905.

INCOME-TAX NOTICE.

THE persons named in the list, which is open for inspection at the Income-Tax Office, No. 3 Charnock Place, Calcutta, are hereby informed that they have been assessed under Part IV of the Second Schedule of Act II of 1886 for the financial year 1905-06 according to the particulars specified therein, and they are hereby required to pay the amount of the tax to the Treasury Officer within sixty days from the date hereof, or to apply to me within thirty days from such date to have the assessment reduced or cancelled, failing which they will be proceeded against as the law provides.

G. GIRARD,
Collector of Income-Tax.

Income Tax Office; No. 3 Charnock Place, Calcutta, the 1st April 1905.

SEPARATE sealed tenders are invited and will be received up to noon of 17th April for each of the following works The first five should be in Form No. 4 and the other in Form No. 2. Works are to be commenced as soon as ordered and completed within May next An earnest-money of Rs. 100 for the first work and Rs. 50 for each of others should be credited in the Howrah Treasury and the challan should accompany each tender:—

	Rs.
(1) Collection of stone metal for Howrah-Jagatballabhpur road for ..	4,335
(2) Collection of stone metal for Old Benares road for	1,972
(3) Collection of jhama metal for Domjur-Jagdishpur road for ...	780
(4) Collection of jhama and stone for Makorda-Mohiari road for ...	684
(5) Collection of jhama metal for Mohiari-Kundu road for	972
(6) Repairs to flood damages of Duke road for	1,000

GANENDRA NATH GANGULY,
District Engineer.

The 1st April 1905

Notice.

PURSUANT to section 76 of the Merchant Shipping Act, VII of 1880, notice is hereby given that the undermentioned gear and wreckage of the late Native vessel "Ganja Padrath" landed by the crew of the said "Ganja Padrath" on the 4th November 1904, are now at Hukitola False Point Port. Persons having claims to them should come to Hukitola False Point, and receive them after paying ware-house charges to the Receiver of Wrecks, Orissa, within one month from the date of publication of this notice, otherwise they will be put to public auction as they are of a perishable nature.

List of articles saved from the wrecked ship "Ganja Padrath" in November 1904.

Articles.	Quantity.
	No.
Oars	4
Yard arm	4
blocks (single wood)	6
Do. (double wood)	4
Do. (single iron)	1
Do. (quadruple wood)	1
Hawser	1
Sheaves	4
Sail and jib	6
Tarpaulin	1
Tiller and seat	1
Yard of four pieces	1
Spears	2
Anchors	2
One box containing campass ...	1
Bell	1
Globe (lantern)	1
	Bundles.
Twine serving	8
	No
Fog signal	1
Lead line	1
Buckets (leather)	2
One bag containing top sail ...	1
Mast	1 at Jambu

W G MAYSTON,
Port Officer of Cuttack and Balasore Ports,
and Receiver of Wrecks, Orissa Ports.

The 29th March 1905.

Corporation of Calcutta.

IN exercise of the powers conferred by section 565 of the Calcutta Municipal Act, 1899, it is hereby declared that the General Committee of the Corporation of Calcutta intend to submit the following draft bye-laws for the consideration of the Corporation.

Any person having any objection to the bye-laws should submit it in writing to the Chairman of the Corporation on or before the 15th May 1905.

Bye-laws under section 559 (54) for regulating the removal and disposal of noxious vegetation.

1. Whenever it shall appear to the Chairman that the removal of any noxious vegetation growing upon or in any land or tank will be beneficial to the neighbourhood, the Chairman may, by written notice, require the owner or occupier of such land or tank to cut, dig up, clear away and remove such vegetation.

2. Every person who, in compliance with any notice under section (1) or otherwise, removes any noxious vegetation from any land or tank shall forthwith carry away and deposit the same in such place as shall from time to time be appointed by the District Engineer for the disposal of such matter if not otherwise disposed of to the satisfaction of the Chairman, and in the event of default it shall be lawful for the District Engineer to carry away such vegetation, and the person so in default shall pay to the Chairman on demand (in addition to any penalty to which he may be liable under these bye-laws) the cost of so carrying away the same at the rate of one rupee per cart.

3 Any person having removed any noxious vegetation from any land or tank shall be entitled to have the same carried away by the District Engineer, provided that such person shall (a) prior to removing such vegetation have given to the District Engineer 48 hours' notice of his intention in that behalf and have deposited a sum sufficient to cover the cost carrying away the same at rate not exceeding 8 annas per cart, and (b) forthwith after removing such vegetation have placed such matter in the nearest place to the said land or tank, which is accessible to the Municipal carts.

No person becoming entitled as aforesaid to have any vegetation carried away by the District Engineer shall incur any penalty for not carrying away the same as in section (2) hereof provided

4. Every person failing to comply with any notice under section (1) or committing any breach of the provisions of section (2) hereof shall be punishable for every such default or breach with a fine which may extend to Rs. 20, or in the case of a continuing default or breach with a fine which may extend to Rs. 10 for every day the default or breach is continued after conviction for the first default or breach.

R T. GREEN, Chairman

Municipal Office, the 10th April 1905. (406—1)

WANTED for the Baikantapur Ward's Estate Jalpaiguri, an Overseer on Rs. 50 per mensem Preference will be given to a passed Subordinate, who has experience in building work.

Applications must be submitted to undersigned on or before the 15th April 1905.

J. A. BEALE,
District Engineer, Jalpaiguri.

Jalpaiguri, the 25th March 1905 (370—2)

Wanted

ONE Sub-Overseer on Rs. 30 with a fixed horse allowance of Rs. 5 per mensem. Experience in building works necessary Must be a neat draftsman and possess qualifications of a Public Works Department Sub-Overseer. Application with copies of testimonials stating the age should reach the undersigned on or before the 15th April 1905.

J. R. LOWIS, Manager, Bettiah Raj

Bettiah, the 20th March 1905. (376—2)

WANTED by the District Board of Birbhum a Head Clerk and Accountant for the District Board's Office on a salary of Rs 70 a month with allowance for doing work in connection with Public Works as will be determined by the Board at the end of every year and with future prospects of increase. Security of Rs. 150 required.

Applications from persons qualified under Bengal Government Notification No. 3331L S.-G., dated 20th December 1901, and with good experience of District Boards' works, will be received up to the 20th April next.

S. C. MUKERJEE,
Chairman, District Board, Birbhum

Birbhum District Board's Office, the 16th March 1905
(291—4)

Notice.

WANTED for the office of the Superintending Engineer, Northern Circle, in Darjeeling, a well-qualified and experienced Estimating Assistant; one with a practical knowledge of construction of roads and buildings preferred.

2. Salary Rs. 80 rising to Rs. 120 by biennial increments of Rs. 8 *plus* hill allowance at 25 per cent. on pay drawn.

3. The selected candidate will be appointed on probation for three months before being confirmed.

4. Applications with copies of testimonials will be received by the undersigned up to the 20th April 1905.

B K. FINNIMORE,
Superintending Engineer, Northern Circle.

Darjeeling, the 3rd April 1905.

Notice.

IN the office of the Board of Revenue, Lower Provinces, there are two vacancies for Europeans or Eurasians—one on a salary of Rs. 75, rising by annual increments of Rs. 10, to Rs. 125 per mensem, and the other on Rs. 40, rising by annual increments of Rs. 4, to Rs. 60 per mensem.

Applications will be received by the undersigned up to the 22nd April 1905.

Any applicant who is not on the list of successful candidates at the Clerical Service Examination, and who is not already in Government service, must satisfy the following conditions, viz., that he—

(*a*) is not less than 18 and not more than 25 years of age;

(*b*) produces satisfactory evidence that he has passed the F A. Examination, the High School Pass or the Senior Cambridge Local Examination;

(*c*) produces similar evidence that he is of good moral character; and

(*d*) produces a certificate from a Government Medical Officer, of or above the rank of Captain, to the effect that he is in good health and of sound constitution.

Preference will be given to applicants who have a knowledge of shorthand.

The selected candidates will be on probation for twelve months.

H. F. SAMMAN, Secretary.

Calcutta, 2 Bankshall Street, the 7th April 1905.

Notice.

WANTED an active and experienced Road Overseer for the Garo Hills district. Salary Rs. 60 rising to Rs. 90 by annual increments of Rs 2 and horse allowance of Rs. 30 per mensem. Nobody need apply who does not possess at least an Overseer's certificate from an Indian Engineering College.

Applications will be received by the undersigned up to 30th April 1905.

The post is not pensionable.

A. PLAYFAIR, CAPT., I A.,
Deputy Commissioner, Garo Hills, Assam.

Tura, the 6th April 1905

WANTED Head Clerk for Arambagh subdivision, district Hooghly. To act for two years. Cash security required Rs. 500. Apply up to 24th April to

H. D. CARRY, Collector, Hooghly.

Hooghly Collectorate, the 10th April 1905.

Wanted

A CLERK on Rs. 50—5—75 for the office of the Director, Agricultural Research Institute, Pusa, Bengal.

Only thoroughly competent and experienced men with extensive knowledge of *accounts* and correspondence work in Government offices need apply.

Applications with copies of testimonials will be received by the undersigned up to the 24th April 1905.

The selected candidate will have to furnish a security deposit of Rs. 500 either in cash or in Government Promissory Notes.

B. COVENTRY,
Director, Agricultural Research Institute,
Pusa, Bengal.

Pusa, the 8th April 1905.

Wanted

A CLERK on Rs. 30—4—50 for the office of the Director, Agricultural Research Institute, Pusa, Bengal.

Applications for the post are invited from those who have at least passed the Entrance Examination, have a thorough knowledge of correspondence work in Government offices and know type-writing.

Applications with copies of testimonials will be received by the undersigned up to the 24th April 1905.

B. COVENTRY,
Director, Agricultural Research Institute,
Pusa, Bengal.

Pusa, the 8th April 1905.

Wanted

A CASHIER AND ACCOUNTANT for the office of the Agri-Horticulturist, Agricultural Research Institute, Pusa, on Rs. 30—4—50 per mensem.

Preference will be given to the candidate who has at least passed the Entrance Examination and has previous experience of the work in Government offices.

The selected candidate will have to furnish a security deposit of Rs. 500 either in cash or in Government Promissory Notes.

Applications with copies of testimonials will be received by the undersigned up to the 24th April 1905.

B. COVENTRY,
Director, Agricultural Research Institute,
Pusa, Bengal.

Pusa, the 8th April 1905.

Wanted

AN experienced Sub-Overseer for the Muzaffarpur District Board on a salary of Rs. 35 rising to Rs. 50 by biennial increment of Rs. 3 and travelling allowance of Rs. 15 per month. The candidate must be qualified under Bengal Government Notification No. 3334L S.-G., dated the 20th December 1901. Applications with copies of certificates will be received by the District Engineer, Muzaffarpur, up to the 25th April 1905.

(397—2)

Notice

IS hereby given that the premises No. 38 Dhurmo-tollah Lane, Sulkea, will be sold by public auction under the provisions of section 361 of the Benga, Municipal Act, on Friday, the 19th May 1905, between the hours of 2 and 5 P.M. by the Vice-Chairman on the spot.

(404—2—248)

GIRINDRA SIRCAR, M.A., B.L., intends to be enrolled as a Vakil of the High Court, Calcutta.

(383—4—238)

Notice.

BABU GUNADA CHARAN SEN, M.A. B.L., Pleader, Barisal, intends to be enrolled as a Vakil of the High Court.

(272—4—239)

SARAT CHANDRA SANYAL, M.A., B.L., Pleader, intends to be enrolled as a Vakil, High Court, Calcutta.

(400—4—247)

The Chota Nagpore Tea Co., Ld. (In Liquidation.)

NOTICE.

A MEETING of the Share-holders of the Chota Nagpore Tea Company, Limited (in Liquidation), will be held at the Registered Office of the Company, No. 20 Strand Road, Calcutta, on Saturday, the 15th April 1905, at 12 noon precisely, to receive the Liquidator's Report and pass the Accounts made up to 31st March 1905.

GERALD KINGSLEY, Liquidator.

Calcutta, the 30th March 1905. (371—1—245)

NOTICE TO CREDITORS.

In the Goods of Robert Gordon Shaw, deceased.

NOTICE is hereby given that Letters of Administration with copy Will annexed to the property and credits of the deceased abovenamed having on the 20th January 1904 been granted to Henry Cooper Eggar, all creditors and other persons having any claim against the estate of the abovenamed deceased are hereby required to send in writing the particulars thereof to the undersigned on or before the 30th day of April 1905, after which date the assets of the estate of the said deceased will be distributed by Henry Cooper Eggar, the Administrator, amongst the parties entitled thereto, having regard to the claims of which he has then had notice. And notice is hereby further given that the said Henry Cooper Eggar will not be liable for the assets or any part thereof so distributed to any person of whose claim he shall not have had notice at the time of such distribution; such notice to be sent to the undersigned.

Dated this 22nd day of March 1905.

SANDERSON & Co.

(30 Dalhousie Square),

Attorneys for Henry Cooper Eggar,

Administrator to the estate of the deceased.

(320—3—236)

NOTICE TO CREDITORS.

In the goods of Frances Louisa Stevens, deceased.

NOTICE is hereby given that Letters of Administration with copy Will annexed to the property and credits of the deceased aboveramed having, on the 1st day of March 1905, been granted to Frederick Henry Eggar, all creditors and other persons having any claim against the estate of the abovenamed deceased are hereby required to send in writing the particulars thereof to the undersigned on or before the 20th day of April 1905, after which date the assets of the estate of the said deceased will be distributed by Frederick Henry Eggar, the Administrator, amongst the parties entitled thereto having regard to the claims of which he has then had notice. And notice is hereby further given that the said Frederick Henry Eggar will not be liable for the assets or any part thereof so distributed to any person of whose claim he shall not have had notice at the time of such distribution, such notice to be sent to the undersigned.

Dated this 15th day of March 1905.

T. H. WESTMACOTT,

Attorney for Frederick Henry Eggar,
Administrator to the estate of the deceased.

(283—3—224)

Estate Francis Boyle Pearson, I.C.S., retired.

NOTICE is hereby given that all creditors and other persons having any claims against the estate of the deceased abovenamed are hereby required to send in writing the particulars thereof to Messrs. King, Hamilton & Co., 7 Hare Street, Calcutta, on or before the 17th day of May 1905, after which date the undersigned will distribute the assets of the estate of the said deceased among the parties entitled thereto having regard to the claims of which he has then had notice.

And notice is hereby further given that the undersigned will not be liable for the assets or any part thereof so distributed to any person of whose claim he shall not have had notice at the time of such distribution.

Dated this 23rd day of March 1905.

A. J. KER,
Administrator with Will annexed of the
Property and Credits of the deceased.
7 Hare Street, Calcutta.

(323—3—229)

Estates John Asteley Cave Browne, District Superintendent of Police, Suri, Birbhum, and Amy Cave Browne, his wife.

NOTICE is hereby given that all creditors and other persons having any claims against the estates of the deceased abovenamed are hereby required to send in writing the particulars thereof to Mrs. A Burvill Holmes, 62 Barrack Road, Barrackpore, before the 10th day of May 1905, after which date the assets of the Estates of the said deceased will be distributed among the parties entitled thereto having regard to the claims of which she has then had notice.

And notice is hereby further given that Mrs. Holmes will not be liable for the assets or any part thereof so distributed to any person of whose claim she shall not have had notice at the time of such distribution.

Dated Barrackpore, this 24th day of March 1905.

(326—3—231)

Estate late Major George Howard Brethertton, Indian Army.

NOTICE is hereby given that all creditors and other persons having any claims against the estate of the deceased above named are hereby required to send in writing the particulars thereof to Messrs. King, Hamilton & Co., 7 Hare Street, Calcutta, on or before the 26th day of May 1905, after which date the undersigned will distribute the assets of the estate of the said deceased among the parties entitled thereto, having regard to the claims of which he has then had notice.

And notice is hereby further given that the undersigned will not be liable for the assets or any part thereof so distributed to any person of whose claim he shall not have had notice at the time of such distribution.

A. J. KER,
Administrator with Will annexed of the
Property and Credits of the deceased.
7 Hare Street, Calcutta.

Dated this 30th day of March 1905. (377—3—243)

INSOLVENT NOTICES.

In the matter of ABUL FUTTAH MAHOMED ABDUL HAFIZ, an insolvent.

Notice that an application for an *ad-interim* protection order has been this day made by the said insolvent, and that such application will be heard and disposed of by the Acting Commissioner of the Insolvent Court on Monday, the 17th day of April instant, at the hour of half-past ten o'clock in the forenoon.

☞ Any creditor of the said insolvent desirous of opposing such application must appear before the said Court at the time and place aforesaid.

Md. Sultan Alum, Attorney. (407—1)

In the matter of MADHUB CHUNDER BYSACK, an insolvent.

On Thursday, the 23rd day of March last, it was ordered that Tuesday, the 2nd day of May next, be appointed for the further hearing of this matter, and that unless cause be shown to the contrary on that day, the said insolvent be discharged personally as well as to his after-acquired property from all liabilities for debts, claims and demands of and against the said insolvent at the time of the filing of his petition for relief.

Shama Churn Basak, Attorney. (408—3)

In the Court of the District Judge of Bhagalpur.

INSOLVENCY CASE No. 17 OF 1904

William Forster, a Fitter in the East Indian Railway Workshop at Jamalpur, district Monghyr, petitioner.

NOTICE

IS hereby given that the 29th day of April 1905 has been fixed by this Court for the creditors of the insolvent to prove their claims and to file before this Court any documentary evidence they have got in

support of their respective dues. The names of creditors failing to prove their debts will not be entered in the schedule which will be prepared under section 352, Civil Procedure Code.

W. TRUNON, District Judge.

Bhagalpur, the 5th April 1905. (305—1—249)

Notice.

THE next annual stock-taking of the Indian Law Reports kept at the Bengal Secretariat Book Depôt will commence on the 1st April and will last till the 19th April, 1905, inclusive. The public are hereby informed that all issues of the said Reports from the said Depôt to subscribers and officials will be suspended during the period.

L. C. ADAMI,
Secretary to the Bengal Council and
Assistant Secretary to the Government of Bengal,
Legislative Department.

The 12th December, 1904.

CALCUTTA POST OFFICE NOTICE.

Mails for—	Date and hour of closing at the General Post Office, Calcutta.		Route by which despatched.
	1905.	P.M.	
United Kingdom, Aden, Egypt, Europe, America, West Africa *vid* United Kingdom and East Africa *vid* Aden (and also South Africa, if superscribed on the cover *vid* United Kingdom or Aden).	Apl. 13	At 6 30	Per P. & O. steamer from Bombay.
Parcels and money-orders for the United Kingdom and other Foreign places.	,, 12	Parcels, 5 P.M.; M.-O., 4 P.M.	Ditto ditto.
* Australasian Colonies ...	,, 17	At 7-30	*Vid* Tuticorin and Colombo.*
† Straits Settlements (also China and Japan, if the Steamer's name is superscribed on the cover).	,, 14	,, 8 30	Per steamer *Suisang*.
Burma	,, 13	,, 7-30	Per B. I. S. N. Co.'s steamer.
Burma, Penang and Singapore.	,, 15	,, 7-30	
Akyab, Kyaukpyu and Sandoway.	,, 15	,, 7-30	
Burma, Tavoy and Mergui ...	,, 17	,, 7-30	
South Africa (Letters) ...	,, 14	,, 7-30	Per steamer *Umkuzi* from Colombo.
Ditto (Parcels) ...	,, 14	,, 5	
Ditto (Letters), Supplemental.	,, 15	,, 7-30	
Ditto (Parcels), Supplemental.	,, 15	,, 5	
Port Blair	,, 15	,, 7-30	*Vid* Rangoon.

* Although the date entered in column 2 is, as far as can be calculated, the latest safe date of posting for the next Mail steamer, full allowance being made for the steamer being in advance of her published timing, Mails for the places mentioned in column 1 are despatched daily to Tuticorin, so that they may proceed by any steamer from Colombo that has been unusually accelerated or retarded, or by any special opportunity that may be afforded by a steamer not belonging to one of the regular lines.

† Correspondence for China and Japan is despatched daily to Tuticorin, so that it may proceed by the first steamer from Colombo.

1. The letter-box for inland articles will be cleared for the forenoon Mails at the following hours:—
   For Goalundo, Arakan and Chittagong, at 5-45 A.M.
   For Midnapore and Orissa districts, at 9 A.M.
   For the Eastern districts, as far as Dacca and Mymensingh, at 6-15 A.M.
   For Khulna and Jessore districts, at 7 A.M.
   For Bombay, Central Provinces and Midnapore *vid* Bengal-Nagpur Railway, at 11-15 A.M., and with a late fee of ½ anna up to 11-40 A.M.

2. The letter-box will be cleared for the evening Mails at the following hours, viz.—
   For the East Indian Railway Loop Mail, at 2-30 P.M., and with a late fee of ½ anna up to 2-55 P.M.
   For the Northern Bengal, Darjeeling and Assam Mails, at 3-25 P.M., and with a late fee of ½ anna up to 3-50 P.M.
   For the Bombay Mail *vid* Jubbulpore, at 6 P.M., and with a late fee of ½ anna up to 6-30 P.M.
   For the Punjab Mail, at 7-30 P.M.
   For Midnapore, Orissa, Madras Presidency and Ceylon, at 7-30 P.M.
   For the Khulna Mail, at 7-30 P.M. } and with a late fee of ½ anna up to 8 P.M. and with a late fee of 1 anna up to 8-45 P.M.
   For the Eastern Bengal Mail, Darjeeling, and Assam on the Darjeeling-Himalayan Railway, at 7-30 P.M.

3. Late registered letters will be received between the following hours:—
   For the Bombay Mail *vid* Jubbulpore, from 5 P.M. to 6-15 P.M.
   For the Punjab Mail, from 6 P.M. to 7 P.M.
   For the Eastern Bengal Mail, from 6 P.M. to 7 P.M.
   For the Khulna Mail, from 6 P.M. to 7 P.M.
   For Midnapore, Orissa, Madras Presidency and Ceylon from 6 P.M. to 7 P.M.

NOTE.—The late fee on each registered letter will be 2 annas, which must be prepaid in stamps on the letter.

4. Articles for Burma and for Port Blair by sea are received without late fee up to 7-30 P.M., and with a late fee of ½ anna up to 8 P.M.

5. On the latest safe day of despatch of Mails for the Australasian Colonies, or any other Foreign Countries, *vid* Madras or Tuticorin, the letter-box for Foreign articles will be cleared for the last time at 7-30 P.M., and late letters and papers fully prepaid will be received up to 8 45 P.M.

6. On the day of despatch of the Mail for Europe (Thursday) the letter-box for Foreign articles will be cleared for the last time for articles, without the late fee, at 6-30 P.M., and late letters and papers fully prepaid will be received up to 6-45 P.M. Late registered articles will be received from 5 to 6 P.M. On the day of despatch of any Foreign Mail by sea, the letter-box will be cleared for the last time, without the late fee, up to 8-30 P.M., and late letters and papers up to 9 P.M. The late fee for Foreign articles is 4 annas, which must be prepaid in stamps affixed to the articles.

CALCUTTA G. P. O., } P. J. GORMAN,
The 10th April 1905. } *Offg. Presidency Postmaster.*

Nadia Rivers.

Report showing the least depths of water for the week ending Friday, the 7th April 1905.

Name of River.	Reach of River.	Least depth of water sounded.	Remarks.
		Ft. in.	
Bhagirathi.	Entrance from Ganges	1 6	Mamintola.
	Thence to Geriah	1 6	Alamper.
	From Geriah to Jangipur	1 6	Ganga Prasad.
	,, Jangipur to Berhampore	1 0	Bhootchat.
	,, Berhampore to Katwa	1 6	Nata-abara.
	,, Katwa to Nadia	3 0	
Bhyrab-Jalangi.	Entrance from Ganges	3 3	Khamardiar.
	Thence to Akriganj	3 0	
	Akriganj to junction of the Bhyrub and Jalangi	3 0	Deboipur.
	Thence to Patkabari	3 3	Lalnaghar.
	Patkabari to Nadia	3 0	Panditpur.
Mathabhanga.	Entrance from Ganges	6 6	Jamalpur.
	Thence to Dewanganj	6 6	Hakara.
	From Dewanganj to Shikarpur	6 6	Bharal.
	,, Shikarpur to Boalia	1 9	Muhammadpur.
	,, Boalia to Chuadanga	1 9	
	,, Chuadanga to Kissengunj and Hanskhali	4 6	Shalmari.

Gauge Readings.

	Locality.	Date.	Hour.	Height above zero.	Height above mean sea-level.	Remarks.
			A.M.	Ft.	Ft.	
Ganges	Sahibganj	6-4-1905	6	9 20	66·20	Steady.
	Rampur Boalia	6-4-1905	Noon	0·83	43 83	Fall.
	Entrance of Bhagirathi Geriah	6-4-1905	A.M. 7	4·60	49 40	Do.
	Entrance of Khairab-Jalangi Akriganj	6-4-1905	7	0·45	38·41	Steady.
	Entrance of Mathabhanga	...	...	...	...	...
Bhagirathi.	Jangipur	6-4-1905	A.M. 8	20·20	46·70	Steady.
	Berhampore	10-4-1905	7	2·40	35·19	Fall.
	Katwa	7-4-1905	P.M. 5	4·30	19·66	Do.
Jalangi.	Krishnagar	7-4-1905	...	0·20	...	...
	Saruppanj	6-4-1905	Noon 12	3 10	3·10	Fall.
Mathabhanga.	Hanskhali	6-4-1905	P.M. 4	4·25	15·20	Rise.

A. K. BANERJI, Accountant,
for *Exe. Engr., Nadia Rivers Division.*

Berhampore, the 10th April 1905.

THE INDIAN LAW REPORTS.

Published in FOUR SERIES, viz.:

CALCUTTA, MADRAS, BOMBAY AND ALLAHABAD.

THE Indian Law Reports, published under the authority of the Governor General in Council, are printed in monthly Parts, which are issued, as soon as possible after the first of each month, at Calcutta, Madras, Bombay and Allahabad, respectively.

The Reports comprise four Series—one for the Calcutta High Court, a second for the Madras High Court, a third for the Bombay High Court, and a fourth for the Allahabad High Court.

The cases heard by the Privy Council on appeal from each High Court are reported in the Series for that High Court. Cases heard by the Privy Council on appeal from Provinces in India not subject to any High Court are reported in the Calcutta Series.

The Calcutta Series is distributed by the Bengal Secretariat Book Depôt; and the Madras, Bombay and Allahabad Series are distributed direct from Madras, Bombay and Allahabad, respectively.

Persons desiring to subscribe for or purchase the Reports should apply to—

the Officer in charge, Bengal Secretariat Book Depôt, Calcutta,
or
the Superintendent, Government Press, Madras, or
the Superintendent, Government Central Press, Bombay, or
the Curator of Government Books, United Provinces of Agra and Oudh, Allahabad.

PRICES.

THE terms of subscription, and the terms on which current issues and back numbers are sold, are as follows:—

	Without postage.	With Indian postage.	With Foreign postage.
COMPLETE SERIES—	Rs. A. P.	Rs. A. P.	Rs. A. P.
Current issues, per annum		22 8 0	28 0 0
Back numbers, per annum	20 0 0	22 8 0	28 0 0
CALCUTTA SERIES—			
Current issues or back numbers, per annum ..	10 0 0	12 8 0	14 0 0
MADRAS, BOMBAY or ALLAHABAD SERIES—			
Current issues or back numbers, per annum ...	6 0 0	7 0 0	8 0 0
ANY MONTHLY PART—			
Calcutta Series	2 0 0	2 0 0	2 0 0
Madras, Bombay or Allahabad Series	1 0 0	1 0 0	1 0 0

All payments must be made in advance. Remittances to Calcutta should be addressed to the TREASURER, BENGAL SECRETARIAT, *Writers' Buildings, Calcutta.*

PARTS OUT OF STOCK AND DUPLICATE COPIES.

WHEN a requisition is received for any set of the Reports, and any Parts are out of stock, the following deduction from the foregoing rates is made for such Parts:—

	Without postage.	With Indian postage.
CALCUTTA SERIES—	Rs. A. P.	Rs. A. P.
All Parts for one year	7 2 6	8 6 3
Any one Part	0 8 9	0 10 3
MADRAS, BOMBAY or ALLAHABAD SERIES—		
All Parts for one year	4 4 6	4 11 3
Any one Part	0 5 3	0 5 9

If any Part is lost in transit to a subscriber, and the fact is reported to the office of distribution within three months from the date of publication, a duplicate will be supplied at the following rate:—

	Without postage.	With Indian postage.
	Rs. A. P.	Rs. A. P.
CALCUTTA SERIES	0 8 9	0 10 3
MADRAS, BOMBAY or ALLAHABAD SERIES	0 5 3	0 5 9

REPRINTS.

THE Complete Series for the years 1876 to 1881, 1883, 1885, 1888, 1890, 1892 to 1896 and 1899 to 1903 has been reprinted, and may be purchased at the Bengal Secretariat Book Depôt, Calcutta, either wholly or in part. All Parts required to complete the stock of the Reports for other years now being reprinted, Complete Reports from the beginning to date will therefore shortly be available at the Bengal Secretariat Book Depôt.

ADVERTISEMENTS FOR THE CALCUTTA SERIES.

ADVERTISEMENTS of law publications only are received. Rates can be ascertained on application to the Bengal Secretariat Book Depôt.

THE BENGAL LAW REPORTS.

SEVERAL volumes of the Bengal Law Reports, from August 1868 to December 1875, and Full Bench Rulings, Parts I and II, are available at the Bengal Secretariat Book Depôt, Calcutta, at the following rates:—

	Without postage.	With Indian postage.
	Rs. A. P.	Rs. A. P.
BENGAL LAW REPORTS, for one year ...	20 0 0	22 8 0
Single copies, each	2 0 0	2 0 0
FULL BENCH RULINGS Part I and II ...	20 0 0	22 8 0

Pure Sulphate of Quinine and Sulphate of Cinchonidine.

MANUFACTURED AT THE BENGAL GOVERNMENT CINCHONA PLANTATION.

FROM 1st April 1905 the price of these articles will be as follows:—

Quinine.

1	Pound tin,	Rs.	16,	or,	post	free,	Rs.	16-8.
½	"	"	"	8	"	"	"	8-6.
¼	"	"	"	4	"	"	"	4-6.

Cinchonidine.

1	Pound tin,	Rs.	12,	or,	post	free,	Rs.	12-8.
½	"	"	"	6	"	"	"	6-6.
¼	"	"	"	3	"	"	"	3-6.

Analysis shows these articles to be of the purest manufacture; and they are guaranteed to be free from wilful admixture with the inferior alkaloids. They are for sale only to Government officers, and only for cash, and may be had from the Superintendent, Botanic Garden, Sibpur, near Calcutta. Cinchonidine can also be purchased by dealers at the following rates:—

1	Pound tin,	Rs.	16,	or,	post	free,	Rs.	16-8.
½	"	"	"	8	"	"	"	8-6.
¼	"	"	"	4	"	"	"	4-4.

Cinchona Febrifuge.

Cinchona Febrifuge can be purchased by all Government officers and by any one taking *five pounds* and upwards at a time from the Superintendent, Botanic Garden, Calcutta, at the following rates—per four-ounce tin, Re. 1 ans. 14; per eight-ounce tin, Rs. 3 ans. 12; per pound tin, Rs. 7 ans. 8; the general public can be supplied by the Superintendent, Botanic Garden, *for cash only*, at the undernoted rates—per four-ounce tin, Rs. 2 ans. 4; per eight-ounce tin, Rs 4 ans. 8; per pound tin, Rs. 9. This medicine is also sold by the principal European and Native druggists in Calcutta. Postage, four annas per four-ounce tin; six annas per eight-ounce tin; and eight annas per pound tin, in addition to the foregoing rates.

THE CALCUTTA GAZETTE.

The 1st March 1901.—From this date the subscription to, and postage for, the *Calcutta Gazette* will be at the following rates, payable in advance:—

PER ANNUM.	For Calcutta.	For the Mufassal including postage.
	Rs. A.	Rs. A.
Entire *Gazette*	15 0	20 0
Parts I, Ia and Ib together ...	5 0	7 8
Part II	1 0	2 12
Parts III, IV and IVa together	4 0	6 0
" V and VI together ..	2 0	3 0
Appendix (Marine Notifications)	1 0	2 12
Supplement	5 0	7 8
PER ISSUE.		
Entire *Gazette*	0 8	0 10
Supplement	0 4	0 5

N B.—Separate Parts of each issue of the *Gazette*, and occasionally important Rules and Extracts, can be obtained from the Officer in charge, Bengal Secretariat Book Depôt, at the rate of one anna for every sixteen pages or a fraction thereof. Postage according to weight.

RATES FOR ADVERTISEMENTS in the *Calcutta Gazette*:—

Full page, per issue	Rs. 20
Half " " "	" 10

Casual advertisements, 4 annas per line per insertion.

Parts I, II, and III of a Descriptive Catalogue of the Sanskrit Manuscripts in the Library of the Calcutta Sanskrit College, prepared by Pandit Hrishikesa Sastri and Babu Siva Chandra Gui, M.A., B.L., of that College, are offered to the public for sale. The Catalogue is to be completed in 23 parts, the price of each part being 12 annas a copy, exclusive of postage. Copies can be obtained from the Principal of the Sanskrit College, Calcutta.

GOVERNMENT PUBLICATIONS FOR SALE

At the Bengal Secretariat Book Depôt, Writers' Buildings, Calcutta, and by the following Agents :—

AGENTS IN INDIA.

Messrs Thacker, Spink & Co., Calcutta and Simla.
Messrs. Newman & Co., Calcutta.
Messrs Higginbotham & Co. Madras.
Messrs. Thacker & Co., Ld., Bombay
Messrs A. J. Combridge & Co., Bombay.
The Superintendent, American Baptist Mission Press, Rangoon.
Mrs Radhabai Atmaram Sagoon, Bombay.
Messrs R. Cambray & Co., Calcutta.
Rai Sahib M. Gulab Singh & Sons, Proprietors of the Mufid-i-am Press, Lahore, Punjab.
Messrs. S. K. Lahiri & Co., Printers and Booksellers, College Street, Calcutta.
Messrs. V. Kalyanarama Iyer & Co., Booksellers, &c., Madras.
Messrs. D. B Taraporevala, Sons & Co., Booksellers, Bombay.
Messrs. G A. Nateson & Co., Madras.
Mr. N. B. Mathur, Superintendent, Nazair Kanum Hind Press, Allahabad.
The Calcutta School Book Society.

AGENTS IN ENGLAND.

Mr. E. A. Arnold, 41 and 43 Maddox Street, Bond Street, London, W
Messrs Constable & Co., 16 James Street, Hay Market, London, W.
Messrs. Kegan Paul, Trench, Trübner & Co., Charing Cross Road, London
Mr. B Alfred Quaritch, 15 Piccadilly, London.
Messrs P S. King & Son, 2 & 4 Great Smith Street, Westminster, London.
Messrs. H. S King & Co., 65 Cornhill, London
Mr. B. H. Blackwell, 50-51, Broad Street, Oxford
Messrs. Deighton Bell & Co., Cambridge.

AGENTS ON THE CONTINENT.

Messrs R. Friedländer & Sohn, Berlin, N. W. Carlstrasse, 11.
Mr. Otto Harrassowitz, Leipzig.
Mr. Karl Hiersemann, Leipzig.
Mr. Ernest Leroux, 28 Rue Bonaparte, Paris.
Mr. Martinus Nijhoff, The Hague.

NOTICE.—Books required for private use can be purchased. Applications should be accompanied by remittance in each case.

All remittances on account of subscriptions to, or prices of, Gazettes, Indian Law Reports or other Government publications available for sale at the Bengal Secretariat Book Depôt, or for cost of advertisements published in the Gazettes should, in future, be made payable to the "Treasurer, Bengal Secretariat, Calcutta." Advices of such remittances, if separately sent, should be addressed to the "Accountant, Bengal Secretariat." All advertisements intended for publication in the *Calcutta* or *Bengali Gazette* should be sent direct to the Superintendent, Government Printing, Bengal

Books required for the Public Service should be obtained through the Heads of Departments.

☞ *The amounts within parentheses are for packing and postage.*

NEW PUBLICATIONS ISSUED DURING THE CURRENT QUARTER.

REVENUE DEPARTMENT.

A Monograph on Gold and Silver Work in the Bengal Presidency. By D. N. Mookherjee, Assistant Director, Land Records and Agriculture. F'cap. Paper cover. Re. 1-8. (2s.)

NEW PUBLICATIONS ISSUED BETWEEN 1ST OCTOBER 1904 AND THE 31ST MARCH 1905.

APPOINTMENT DEPARTMENT.

Quarterly Civil List of Bengal, corrected up to 1st January 1905. Re. 1. (4s.)

FINANCIAL DEPARTMENT.

Report on the Road and Public Works Cess Operations of the Lower Provinces for the official year 1903-04. F'cap. Paper cover Re. 1. (2s.)
Report on the Administration of the Excise Department in the Lower Provinces of Bengal for the year 1903-04. F'cap. Paper cover. Re. 1. (2s.)

GENERAL DEPARTMENT.

Report on Inland Emigration during the year ending 30th June 1904. F'cap. Paper cover. As. 8 (1s.)
General Report on Public Instruction in Bengal for 1903-04 F'cap. Paper. Re. 1-5-3. (2s.)
List of Officers in the Subordinate Educational Service, Bengal, corrected up to 1st January 1905 As. 8 (1s.)
Bengal Administration Report, 1903-04 F'cap. Cloth. Re. 1. (3s.)

JUDICIAL DEPARTMENT.

Annual Report on the Police Administration of the Town of Calcutta and its suburbs for the year 1903. F'cap. Paper cover. Re. 1 (2s.)

LEGISLATIVE DEPARTMENT.

The Chota Nagpur Landlord and Tenant Procedure Act (Bengal Act I of 1879, modified) with notes by H. W. C. Carnduff. Re. 1-8. (2s.)
Indian Emigration Act (Amendment) (Act XII of 1904) in Bengali, Hindi or Uriya. 6p. (1a.)
The Indian Stamp Act (Act XV of 1904), in Bengali, Hindi or Uriya. 1a. (1a.)
The Local Authorities Loans Act (Act I of 1905) in Bengali or Hindi. 6p. (1a.)
The Indian Universities Validation Act (Act II of 1905) in Bengali or Hindi. 6p. (1a.)
The Stage Carriages Act (Act XVI of 1861), as modified up to 1st February 1898, in Hindi. As. 3. (1a.)
The Indian Evidence Act (Act I of 1872) as modified up to 1st November 1902, in Hindi. As. 14 (1a.)
The Indian Explosives Act (Act IV of 1884) as modified up to 1st December 1884 in Hindi. As. 2. (1a.)
The Bengal Tenancy Act (Act VIII of 1885) as modified up to 1st December 1903, in Uriya. Re. 1 (2a.)
The Indian Railway Act (Act IX of 1890) as modified up to 1st May 1896 and corrected up to the 1st December 1903, in Hindi. As. 13. (1a.)

MUNICIPAL DEPARTMENT.

List of qualified Medical Practitioners in Bengal, 1904. Royal 8vo. Boards. Paper cover. Re. 1. (2s.)
Resolution reviewing the working of Municipalities in Bengal during the year 1903-04. F'cap. Paper cover. Re. 1. (2s.)
Resolution reviewing the Reports on the working of District Boards in Bengal during the year 1903-04. F'cap. Paper cover. Re. 1. (1s.)

PUBLIC WORKS DEPARTMENT.

Conditions under which Electric Meters and other instruments will be accepted for testing in the Government Electrical Laboratory, Calcutta, and Table of Fees. F'cap. Paper cover. 1a. (1a.)
Revenue Report of the Government of Bengal, Public Works Department, Irrigation Branch, for the year 1903-04. F'cap. Boards. Paper cover. Re. 2. (3s.)
Classified List and Distribution Return of Establishment of the Public Works Department, Bengal, corrected up to 31st December 1904. Re. 4. (2s.)
Resolution on the Embankment and Drainage Reports of the Government of Bengal, Irrigation Department, for the year 1903-04. F'cap. Boards. Paper cover. Re. 1. (2s.)

REVENUE DEPARTMENT.

Annual Report on the Survey Operations in Bengal during 1903-04 (from October 1903 to September 1904). F'cap. Paper cover. Re. 1. (2s.)
Final Report on the Survey and Settlement Operations in the Saran District, 1893 to 1901, by J. H. Kerr, Esq., Settlement Officer, North Bihar. F'cap. Boards, paper cover. Re. 4-8. (6s.)
Final Report on the Survey and Settlement Operations in the Darbhanga District, 1896 to 1903, by J. H. Kerr, Esq. F'cap. Boards, paper cover. Re. 6. (5s.)
Abstract of the Indian Factories Act, 1881, in sheet form, for hanging up in Factories. In English and Hindi and Urdu. As. 4. (1a.) unmounted. Re. 1-4 mounted
Agricultural Statistics of the Lower Provinces of Bengal for 1903-04. F'cap. Paper cover. As. 8. (1a.)
Report on Wards and attached Estates in the Lower Provinces for the year 1903-04. F'cap. Paper cover. Re. 1-8. (2s.)
Report on the Land Revenue Administration of the Lower Provinces for the year 1903-04. F'cap. Paper cover. Re. 3. (3s.)

STATISTICAL DEPARTMENT.

The Trade of Bengal with Nepal, Thibet, Sikkim and Bhutan for the year ending March 1904. Boards. Paper cover. Re. 1-2. (2s.)
Report on the Trade carried by Rail and River in Bengal in the official year 1903-04. F'cap. Board. Paper cover. Re. 4. (5s.)

OLDER PUBLICATIONS.

A General Catalogue of all Government Publications (corrected up to 30th June 1904) may be obtained *gratis* on application to the Officer in charge, Bengal Secretariat Book Depot

Publications for sale at the office of the Chief Inspector of Explosives with the Government of India.

Rules for the manufacture, possession and sale of explosives issued by each of the Local Governments and Administrations. Price 12s.
Rules for the transport and importation of explosives issued by the Government of India Price 12s.
Rules for the transport and importation of explosives at the Port of Calcutta. Price 4s.

Publications for sale at the Custom House, Calcutta.

Review of the Maritime Trade of Bengal and its Chief Port (Calcutta) for the year 1903-04. Price Re. 1.
Annual Statement of the Sea-borne Trade and Navigation of Bengal, Foreign and Coasting combined in one volume, for the year 1903-04. Price Re. 6.
Previous years' volumes can be obtained at the same price.

GOVERNMENT PUBLICATIONS FOR SALE

BY THE SUPERINTENDENT OF GOVERNMENT PRINTING, INDIA, 8 HASTINGS STREET, CALCUTTA.

A General Catalogue of all Government Publications may be obtained gratis from the Government Central Press, Calcutta.

All books published by the Superintendent of Government Printing, India, can be purchased, either directly or through the following or any other booksellers:—

AGENTS IN EUROPE.

Mr. E. Arnold, 41 and 43 Maddox Street, Bond Street, W. London.

Messrs. Constable & Co., 16 James Street, Haymarket, W., London.

Messrs. Kegan Paul, Trench, Trubner & Co., Charing Cross Road, London.

Mr. Bernard Quaritch, 15 Piccadilly, London.

Messrs. P. S. King and Son, 2 & 4 Great Smith Street, Westminster.

Messrs. H. S. King & Co., 65 Cornhill and 9 Pall Mall, London.

Messrs. Grindlay & Co., 54 Parliament Street, London, S. W., Agents for the sale of the Army List.

Mr. Otto Harrassowits } Leipzig
Mr. Karl Hiersemann }

Messrs. R. Friedlander & Sohn, Berlin, W. N. Carlstrasse, 11

Mr. Ernest Leroux, 28 Rue Bonaparte, Paris.

Mr. Martinus Nijhoff, Hague, Holland.

Mr. B. H. Blackwell, 50 & 51 Broad Street, Oxford.

Messrs. Deighton Bell & Co., Cambridge

AGENTS IN INDIA.

Messrs. Thacker, Spink & Co., Calcutta and Simla.

Messrs. Newman & Co., Calcutta.

Messrs. R. Cambray & Co., Calcutta.

Messrs. S. K. Lahiri & Co., Calcutta.

Eveyln, Hubert, & Co.,* 149, Dhurmotollah Street, Calcutta.

Messrs. Higginbotham & Co., Madras.

Messrs. V. Kalyanarama Iyer & Co., Madras.

Messrs. G. A. Natesan & Co., Madras.

Messrs. Thacker & Co., Ld., Bombay.

Messrs. A. J. Combridge & Co., Bombay.

Messrs. D. B. Taraporevala, Sons & Co., Bombay

Mrs. Radhabai Atmaram Sagoon, Bombay.

Superintendent, American Baptist Mission Press, Rangoon.

Rai Sahib M. Gulab Singh & Sons, Mufid-i-Am Press, Lahore.

Mr. N. B. Mathur, Superintendent, Nasair Kanun Hind Press, Allahabad.

Manager, Educational Book Depôts, Nagpur and Jubbulpore.*

Manager of the Imperial Book Depôt, 63 Chandny Chauk Street, Delhi.*

Manager, "East Coast News," Visagapatam.*

Manager, "The Agra Medical Hall and Co-operative Association, Limited" (Successors to A. John & Co., Agra).*

Mr. T. K. Seetharama Aiyar, Kumbakonam.*

Lala Debi Prasad, Vakil and Manager of Law Press, Cawnpore.*

Superintendent, Basel Mission Book and Tract Depository, Mangalore.*

Messrs. P. Varadachary & Co., Madras.*

Mr. Sunder Pandurang, Bombay.*

The Mercantile Mission Branch, Calicut.*

H. Dowman, Esq. (late Extra Assistant Superintendent, Survey of India), Allahabad.*

H. Liddell, Esq., Printers, etc., 7, South Road, Allahabad.*

* Agents for sale of the Legislative Department publications.

NOTICE.—Books and Acts required for private use only can be purchased. Applications should be accompanied by a remittance, unless it is wished that the books should be sent by value-payable post, in which case, besides the ordinary postage, an additional charge is made for registration and commission.

Books and Acts required for the public service should be obtained through Local Governments to whom the applicant is subordinate.

Application for Government publications which are no longer in print should be made to the Agents of the particular Government under whose orders they were originally issued.

(The amounts within parentheses are for packing and postage.)

List of New Books published during the Current Quarter

HOME DEPARTMENT.

Scientific Memoirs by Officers of the Medical and Sanitary Departments of the Government of India—Oriental or Delhi Sore by Captain S. P. James, M.B., I.M.S., New series. No. 13 Super-Royal 4to. Limp cover. 10a. or 1s. (3a.)

Scientific Memoirs by Officers of the Medical and Sanitary Department of the Government of India—On a parasite found in the White Corpuscles of the blood of dogs by Captain S. P. James, M.B., I.M.S. New series No. 14. Super-Royal 4to. Limp cover. 10a. or 1s. (3a.)

Imperial Library List of Additions, Third Series, with subject index, March 1905. No. V. Super-Royal 4to. Paper cover. 8a. or 9d. (3a.)

The Private Diary of Ananda Ranga Pillai, Vol. I, 1736 to 1746—Dubash to Joseph Francois Dupleix, Knight of the Order of St. Michael, and Governor of Pondichery.—A record of Matters, Political, Historical, Social, and Personal, from 1736 to 1761. Translated from the Tamil by the order of the Government of Madras and Edited by Sir J. Frederick Price, K.C.S.I., late of the I.C.S., assisted by R. Rangachari, B.A. Rs. 3 or 4s. 6d. (7a.)

REVENUE AND AGRICULTURE DEPARTMENT.

Progress Report of Forest Administrations in the Andamans for 1903-04. Foolscap. Paper cover. 8a. or 9d. (2a.)

COMPTROLLER-GENERAL.

Appropriation Report on the Accounts of the Government of India for 1903-04 by A. F. Cox, Esq. Foolscap. Board. 8a. or 9d. (6a.)

STATISTICAL DEPARTMENT.

Sea-Borne Trade and Navigation Accounts of British India for the month of February 1905. No. 11 of 1904-05. Royal 8vo. Stitched. 8a. or 9d. (2a.)

List of Books published from October 1904 to March 1905.

LEGISLATIVE DEPARTMENT.

The Indian Registration Act, 1877 (III of 1877), as modified up to 1st April, 1900, with footnotes brought down to 1st November, 1902. 11a. (2a.)

The Indian Emigration Act, 1883 (XXI of 1883), as modified up to 1st December, 1902. 11a.

Act XXX of 1852. An Act for the Naturalisation of Aliens, as modified up to 1st December, 1902. 2a. (1a.)

Act V of 1861. The Police Act, 1861. As modified up to 7th March, 1906. 7a. 6p. (1a.)

Act X of 1873. The Indian Oaths Act. As modified up to 1st February, 1903. 3a. 9p. (1a.)

Act XIX of 1883. The Land Improvement Loans Act, 1883. As modified up to 1st February, 1903. 2a. 6p. (1a.)

Act XII of 1884. The Agriculturists' Loans Act, 1884. As modified up to the 15th December, 1896, and with footnotes brought down to the 1st February, 1903. 2a. (1a.)

Act IX of 1890. The Indian Railways Act, 1890. As modified up to 1st May, 1896, with footnotes brought down to 1st January, 1903. 15a. (3a.)

Act XXXIV of 1850. The State Prisoners Act, 1850. As modified up to 30th April, 1903. 2a. 6p. (1a.)

Act XXXIV of 1858. The Lunacy (Supreme Courts) Act, 1858. As modified up to 30th April, 1903. 4a. 3p. (1a.)

Act XXXV of 1858. The Lunacy (District Courts) Act, 1858. As modified up to 30th April, 1903. 2a. 3p. (1a.)

Act V of 1873. The Government Savings Banks Act, 1873. As modified up to 1st April, 1903. 3a. 6p. (1a.)

Act II of 1886. The Indian Income Tax Act, 1886. As modified up to 1st April, 1903. 8a. (1a. 6p.)

Act I of 1878. The Opium Act, 1878. As modified up to 1st December, 1896, with footnotes brought down to 1st March, 1902. 5a. 6p. (1a.)

Act III of 1865. The Carriers Act, 1865. As modified up to 31st May, 1903. 3a. (1a.)

Act IX of 1897. Amending the law relating to Government and other Provident Funds. As modified up to 1st May, 1896, with footnotes brought down to 1st January, 1903. 1a. 6p. (1a.)

Act No. XII of 1855 (Legal Representatives' Suits), as modified up to 1st November, 1904. 1a 6p. (1a.)

Act No IX. of 1860 [Employers and Workmen (Disputes)], as modified up to 1st December, 1904. 1a. 6p. (1a.)

Act No XXI of 1860 (Societies Registration), as modified up to 1st December, 1904. 2a. 3p. (1a.)

The Punjab Laws Act, 1872 (IV of 1872), as modified up to 1st November, 1904. 7a. 1a. (1a.)

The Indian Christian Marriage Act, 1872 (XV of 1872), as modified up to 1st December, 1904. 10a. (1a.)

Act No. X of 1891 (Indian Penal Code Amendment), as modified up to 1st December 1904 1a. (1a.)

The Indian Petroleum Act, 1899 (VIII of 1899), as modified up to the 1st December 1904. 7a. (1a.)

The Indian Extradition Act, 1903 (XV of 1903), as modified up to 1st December, 1904. 5a. 6p. (1a.)

Act V of 1869 The Indian Articles of War, as modified up to 1st December 1904. Royal 8vo. Stitched. Re. 1 2a. (3a.)

Act XV of 1881. The Indian Factories Act, 1881, as modified up to the 1st December 1904. Royal 8vo. Stitched. 5a. 6p. (1a. 6p.)

Act V of 1883. The Indian Merchant Shipping Act, 1883, as modified up to the 1st December, 1904. Royal 8vo. Stitched. 6a (1a.)

The Central Provinces Code, 3rd Edition, 1905. Cloth. Super-Royal 8vo. Re. 4 or 6s. (6a.)

The Bengal Code, Volume I, 3rd Edition, 1905 (Now ready). Cloth. Super-Royal. Price all 5 Volumes Rs. 20 or 45s. Vol. I. Rs. 6 or 9s. (8a.)

The Public Gambling Act, 1867 (III of 1867), as modified up to the 1st January, 1905. As. 4 or 5d. (1a.)

The Indian Contract Act, 1872 (Act IX of 1872), as modified up to the 30th June, 1901 Royal 8vo. Stitched Re. 1-4a. (2a.)

HOME DEPARTMENT

Scientific Memoirs by Officers of the Medical and Sanitary Departments of the Government of India. On a parasite found in persons suffering from enlargement of the spleen in India, by Lieut S R Christophers, M B., I.M S, New series, No. 11 Super Royal 4to. Limp cover. Rs. 2 or 3s. (3a.)

Report on the Administration of Criminal Justice in Lower Provinces of Bengal during the year 1903. Foolscap. Paper cover Re. 1. or 1s. 6d (2a.)

Imperial Library List of Additions, September to December 1904, Nos. 1-6. Foolscap Paper cover. As. 8 or 9d. (2a.) each.

Report on the Administration of Civil Justice in the Lower Provinces of Bengal during the year 1903. Foolscap Paper cover Re 1 or 1s. 6d. (3a.)

Scientific Memoirs by Officers of the Medical and Sanitary Departments of the Government of India on the Morphology, Teratology and Declinism of the Flowers of Cannabis By Major D. Prain, M.B., I.M.S New series. No. 12. Super-Royal 4to. Limp cover 14a. 1s. 4d. (3a.)

Quarterly List of Officers in the Departments of the Government of India, October to December 1904, January to March 1905. Foolscap, Paper cover As. 4 or 6d (1s.)

Annual Report of the Sanitary Commissioner with the Government of India, 1903, with Appendices and Returns of sickness and Mortality among European Troops, Native Troops and Prisoners in India for the year. Foolscap. Board. Rs. 3 or 4s. 6d. (8s.)

Report of the Indian Police Commission, 902-03. Foolscap. Board. With appendices Re. 1-8s. (7s.); without appendices, Re. 1 (6s.)

DEPARTMENT OF REVENUE AND AGRICULTURE.

Report of the Chief Inspector of Mines in India for the year ending 31st December 1903. Foolscap. Board. As. 12 or 1s. 2d. (2s.)

Review of Forest Administration in British India for the year 1902-03. Foolscap. Paper cover. Re. 1-11 or 2s. 6d. (3s.)

Annual Administration Report of the Civil Veterinary Department in India for the official year 1903-04. Foolscap. Paper cover. 12s. or 1s. (2s.)

Records of the Botanical Survey of India. Vol. IV, No. 1 (An Epitome of the British Indian Species of impatients by Sir J. D. Hooker, G.C.S.I., C.B., F.R.S. Part I. Royal 8vo. Paper cover. 3s or 4d. (1s.)

Records of the Botanical Survey of India. Vol III, No. 2. The vegetation of the districts of Hughli, Howrah and the 24-Parganas, by D. Prain, Esq. Re. 1-12. or 2s. 6d. (3s.)

Rules framed under section 20 of the Indian Mines Act, 1901 (VIII of 1901) prescribing the Compulsory submission of Annual returns of output and labour of Indian Mines. Foolscap 0-0-6. (1s.)

Rules for the Lease or Sale of Waste Lands in India. 1904 edition. Foolscap. Board. Rs. 4 or 6s. (8s.)

Archæological Survey of India. Annual Report, 1902-03. Super-Royal. Cloth. Rs. 20 or £1 10s. (Re. 1 2s.)

Annual Report of the Board of Scientific Advice for India for the year 1903-04. Foolscap. Paper cover. 6s. or 7d (2s.)

List of Officers in the Department of Revenue and Agriculture, Government of India, and the Departments subordinate to it, corrected to 1st January 1905. As 8 or 8d. (2s.)

FOREIGN DEPARTMENT.

Report on the Political Administration of the Territories within the Central India Agency for 1902-03. Foolscap Board. Re. 1 or 1s 6d. (3s.)

Report on the Administration of the Civil and Military Station of Bangalore for the year 1902-03. 8s. or 9d. (2s.)

Report on the Administration of Berar for the year 1902-03 Foolscap. Board. Rs. 2 or 3s. (3s.)

Report on the Administration of the Civil and Military Station of Bangalore for the year 1903-04. Foolscap Limp cover. 8s. or 9d. (2s.)

FINANCE DEPARTMENT.

Report on the Administration of the Mint at Bombay and Calcutta for the year 1903-04 Foolscap. Paper cover. Re. 1 or 1s. 6d (2s.)

Statistics Compiled from the Finance and Revenue Accounts of the Government of India Receipts and Disbursemets of Home and Indian Accounts from 1st April 1895 to 31st March 1903. Foolscap. Board. Rs. 2 or 3s. (9s.)

List of Officers in the Finance and Commerce Department, corrected to 1st October, December 1904, January and February 1905 Royal 8vo. Paper cover. 4s. or 6d. (1s.)

COMPTROLLER-GENERAL.

Finance and Revenue Accounts of the Government of India for the year 1903-04. Foolscap. Board. Rs. 2. or 3s. (8s.)

STATISTICAL DEPARTMENT.

Statistics of Cotton Spinning and Weaving in the Indian Mills in June 1904 and in the three months, April to June 1904, compared with the corresponding period of 1902 and 1903. No. 5 of 1904-05. Royal 8vo. Stitched. 2s. or 2d. (1s.) each.

Trade and Navigation Accounts of British India for the months of August, September and October 1904. Nos. 5, 6 and 7 of 1904-05. Royal 8vo. Stitched. 8s. or 9d. (2s.) each.

Accounts of the External Land Trade of British India for the months of June, July and August 1904. Nos. 3, 4 and 5 of 1904-05. Royal 8vo. Stitched. 8s. or 9d. (2s.) each.

Statistics of Cotton Spinning and Weaving in the Indian Mills in July, August, September, October, November, December 1904. Royal 8vo. Stitched. 2s. or 2d. (1s.) each.

Judicial and Administrative Statistics of British India for 1902-03 and preceding years. 8th issue. Foolscap. Board. Rs. 2 or 3s. (10s.)

Accounts of the French Possessions in India in the year ending 31st March 1904 and the four preceding years. Foolscap. Paper cover. 2s. or 2d. (1s.)

Accounts of the Trade of Aden in the year ending 31st March 1904 and the four preceding years. Foolscap. Paper cover. 10s. (1s.)

Area and yield of certain principal crops in India. Sixth issue. Foolscap. Paper cover. 5s or 6d. (2s.)

Sea-Borne Trade and Navigation Accounts of British India for the months of November, December 1904. January 1905. Nos. 8, 9 and 10 of 1904-05. Royal 8vo. Stitched. 8s. or 9d. (2s.)

Accounts of the External Land Trade of British India for the month of September, October 1904. Nos 6, 7 and 8 of 1904-05. Royal 8vo. Stitched. 8s. or 9d. (2s.)

Agricultural Statistics of India for the years 1898-99 to 1902-03 in two Volumes Foolscap. Board. Both Volumes. Rs. 3-8 s. or 5s. 3d. (12s.)

Accounts relating to the trade carried by Rail and River in India in the quarter ending June 1904, compared with the corresponding period of the years 1902 and 1903. No 1 of 1904-05 Foolscap. Paper cover. 8s. or 9d (3s.)

Financial and Commercial Statistics of British India, II issue, 1904. Super-Royal, Paper cover Rs. 4 or 6s. (12s.)

Tariff Shedules, 1905. Royal 8vo. Stitched. 6s. or 7d. (1s.)

Annual Statement of the Coasting Trade and Navigation of British India in the year ending 31st March 1904. Super-Royal. Board. Rs. 2 or 3s. (7s.)

ACCOUNTANT-GENERAL.

History of Services of Gazetted and other Officers serving under the Government of Bengal corrected to 1st July 1904. In two parts. Royal 8vo. Board. Rs. 5 or 7s. 6d. (12s.)

MILITARY DEPARTMENT.

Return of Wreck and Casualties in Indian Waters, 1902-03. Foolscap. Board. Re. 1 or 1s. 6d. (3s).

Class Hand Books for the Indian Army—Mappillas or Moplahs, by Major P. Holland Pryor. Royal 8vo. Board. Re. 1-4 or 1s. 11d. (5s.)

Hand Book for the Indian Army—Jats, Gujars, and Ahirs, by Major A. H. Bingley. Royal 8vo. Board. Re. 1 or 1s. 6d. (5s.)

Classified List and Distribution Return of the Establishment of the Military Works Services corrected up to 31st December 1904. Royal 8vo. Paper cover. 4s. or 5d. (1s.)

RAILWAY BOARD

Administration Report of the Telegraph Department for 1903-04. Foolscap. Paper cover, 8s. or 6d. (2s.)

Public Works Department Classified List of the Subordinate Establishment, corrected to 30th June 1904. Royal 8vo. Paper cover 4s. or 5d. (1s.)

Public Works Department Classified List and Distribution of Establishment corrected up to 31st December 1904. Super-Royal 8vo. Paper cover. Rs. 2 or 3s. (4s.)

Selections from the Records of the Government of India in the Public Works Department, No. CCXXXVIII.—Relative Merits of Broad and Metre Gauge Lines of Railway. Foolscap. Board. 4s. or 5d. (1s. 6p.)

Classified List of the Subordinate Establishment corrected up to 31st December 1904. Royal 8vo. Paper. 4s. or 5d. (1s.)

List of new books for sale at Thomason College, Roorkee, which were not advertised before.

Roorkee Treatise on "Railways," 4th Edition, revised by F. Wolly Dod, M.C.E. Price, Rs. 3 per copy.

Roorkee Treatise on "Irrigation Work." By Lieutenant-Colonel J. Clibborn, I.S.C., R.A., L.C.E., C.I.E. Price, Rs. 9 per copy.

Roorkee Treatise on "Sanitary Engineering." Compiled by Lieutenant-Colonel J. Clibborn, I.S.C., R.A., L.C.E., C.I.E. Price, Rs. 4-8 per copy.

Roorkee Manual of "Applied Mechanics," Volume II. The stability of structures mostly by graphic methods, by Lieutenant-Colonel J. H. C. Harrison, R.E. Price, Rs. 3-2 per copy.

Roorkee Manual of Hydraulics. Price per copy, Rs. 1-4. (No. XIX, Elementary Treatise.) By E. F. Tipple, Esq., B.A.

Designs for Wooden Bridges, together with rules for calculating the area of waterway, etc., and Plates. By late Rai Bahadur Kunhya Lal. Price per set, Rs. 4-2

Pamphlet on Examination for Acid Radicals: Tables giving Analysis of Acids. Price per copy, 8s.

Pamphlet on Examination for Acid Bases: Tables giving Analysis of Metallic Bases. Price, 8s. per copy.

List of New Books available for sale in the College Book Depôt.

Roorkee Treatise on Civil Engineering, Section XIII. Drawing for Engineer students, Part I. By Major E. H. deV. Atkinson, R.E., Principal, Thomason College, Roorkee. Price per copy Rs. 3-2, including packing, postage, etc.

Hand Book of the Thomason Engineering College, Roorkee, Illustrated. Price Rs. 6-12 per copy, including packing, postage, etc.

A list of new books and periodicals for sale at the Library of the Asiatic Society of Bengal, 57 Park Street, Calcutta.

SOCIETY'S PUBLICATIONS.

Journal, Part I, Nos. 3 and 4 of 1904, at Rs. 3.
" Part II, Nos. 3 to 5 of 1904, at Rs. 2.
" Part III, Nos. 3 and 4 of 1904, at Rs. 2.
Proceedings Nos. 7 and 8 of 1904, at 8s.

BIBLIOTHECA INDICA.

Bhatta Dipika. Vol. I, Fasc. 5, at 6s.
Catadusani. Vol. I, Fasc. 2, at 6s.
Clokavartika (English). Fasc. 5, at 12s.
Catasahasrika Prajnaparamita. Part I, Fasc. 8, at 6s.
Caturvarga Cintamani. Vol. V, Fasc., 2, 3, at 6s.
Catapatha Brahmana. Vol. III, Fasc. 5, at 6s
Mahabhasyaprodipoddyota. Vol. II, Fasc. 12, at 6s.
Nityacara Pradipah. Fasc. 8, at 6s.
Sradhya Kriya Kaumudi. Fasc. 6, at 6s.
Tantravartika (English). Fasc. 3, at 12s.
Vidhana Parijata. Vol. I, Fasc. 6, at 6s.

List of Books published by the Meteorological Department during the Current Quarter.

Indian Meteorological Memoirs, Vol. XVI, Part II, by Sir John Eliot. Quarto. Paper cover Rs. 3.

List of books published by the Meteorological Department from 1st October 1904 to 31st March 1905.

Monthly Weather Review, April to September 1904. (Illustrated by 6 plates.) Quarto. Paper cover. Re. 1 per month.

Indian Meteorological Memoirs, Vol. XVI. Part II. By Sir John Eliot. Quarto. Paper cover. Rs. 3.

APPENDIX TO

The Calcutta Gazette.

WEDNESDAY, APRIL 12, 1905.

NOTICES TO MARINERS.

THE following Notices are published for general information.

W. A. INGLIS,
Secretary, Marine Department.

CALCUTTA, *the 4th April 1905.*

BAY OF BENGAL—BURMA COAST.

Kyouk Phyou harbour—Actual depth of water on the Irrawaddy shoal.

No. 105.—(First publication).—The Master of the S.S. *Pachumba* reports that when passing the Irrawaddy shoal, outside Kyouk Phyou harbour, on the morning of the 24th March, he observed at L. W. S. that rocks were showing 3 feet above water on the shoal. This shoal is marked on the Admiralty Chart as having 2½ fathoms water at L. W. S. Mariners are accordingly warned.

ARABIA, NORTH-EAST—PERSIAN GULF.

Shat-al-Arab—Mooring buoys to be placed at entrance.

No. 106 (first publication).—A telegraphic communication has been received from the Director of the Royal Indian Marine, stating that it is contemplated mooring buoys at the entrance of the Shat-al-Arab river, in positions making deep water channels, about the middle of April. Mariners are accordingly cautioned not to enter or leave the river after the 15th April without ascertaining whether buoys have been moored.

A further notification will be made as soon as new positions have been determined

AUSTRALIA—VICTORIA.

Port Phillip entrance—Sweeping and blasting operations.

No. 107 (first publication).—With reference to Notice to Mariners No. 376, dated 4th November 1904, issued by this Office, the British Admiralty has given further notice (No. 165 of 1905) that, on or about 9th January 1905, sweeping and blasting operations for removing the shoal patches obstructing the entrance into Port Phillip would be resumed.

The steam-vessel employed for this purpose will, when sweeping, display the Code signal X. H. C., and when blasting will hoist letter B, at the masthead. Before the charge is exploded this vessel will give prolonged blasts with the steam whistle, and a red flag will be shown from the larger of the attendant boats.

CAUTION.—When these signals are displayed mariners are warned not to approach the boats engaged in this work nearer than half a mile, and they are specially requested to keep clear of these vessels when sweeping operations are in progress, as the apparatus renders the vessel's movements slow and uncertain.

Approximate position, lat. 38° 18′ S., long. 144° 38′ E.

This Notice affects the following Admiralty Chart:—Port Phillip entrance, No. 2747a: Also, Australia Directory, vol. I, 1897, page 432.

BAY OF BENGAL—Burma coast.

Rangoon river—Shoal in entrance—Buoy moved.

No. 108 (first publication).—The British Admiralty has given notice (No. 169 of 1905) of the existence of a shoal, of small extent, with a depth of 19 feet over it at low water, in the entrance to Rangoon river; it is situated at a distance of 8¼ cables S. 63° W. from the Upper Eastern buoy, or $2\frac{8}{10}$ miles S. 83° E. from Survey beacon No. 3.

Also, that Lower Spit buoy has been moved 3⅛ cables N. 23° E. from its former position, and is now moored with Survey beacon No. 3, bearing N. 88° W., distant 2⅛ miles, and Elephant point obelisk N. 24° W.

Approximate position, lat. 16° 26′ N., long. 96° 21′ E.

(*Variation 1° Easterly in 1905.*)

This Notice affects the following Admiralty Chart :—Rangoon river, No. 833 : Also, Bay of Bengal Pilot, 1901, page 351.

CHINA SEA—Gulf of Siam.

Middle island—Amended position of rock to the southward.

No. 109 (first publication).—With reference to Notice to Mariners No. 179, dated 27th May 1904, issued by this office, the British Admiralty has given further notice (No. 172 of 1905) that, according to the French Government Chart recently received, the two rocky heads, with depths of 8 and 5 feet over them, described in paragraph 6 of the above notice, are situated at a distance of 7 cables S. 14° W. from the south point of Middle island, and not $1\frac{4}{10}$ cables S. 34° W. as originally stated.

Approximate position on Chart No. 2725, lat. 10° 26′ N., long. 103° 46½′ E.

(*Variation 2° Easterly in 1905.*)

Note.—A new edition of Chart No. 2725 will shortly be issued.

This Notice affects the following Admiralty Charts :—Bay island to Pulo Obi, No. 2723; Koh Tron, No. 2725; Koh Kut to Bay island, No. 2722. Also, China Sea Directory, vol. II, 1899, page 351.

PACIFIC OCEAN—The Philippines—Sibu, east coast.

Capitancillo island—Light established.

No. 110 (first publication).—With reference to Notice to Mariners No. 209, dated 15th June 1903, issued by this Office, the British Admiralty has given further notice (No. 173 of 1905) that the temporary white fixed light exhibited from a tree on Capitancillo island would, on January 1st, 1905, be replaced by a *group flashing* light showing a group of *three white* flashes every *ten seconds* followed by a *red* flash, the eclipses between the white flashes being *one and a half seconds*, and between the groups of white flashes and the red flash *three and a half seconds*; it should be visible in clear weather from a distance of 17 miles, and would be exhibited from a steel tower 80 feet high.

Approximate position, lat. 10° 59′ N., long. 124° 6′ E.

Note.—The period of system of the above light must be considered approximate, as the time occupied by the flashes is not included.

This Notice affects the following Admiralty Charts :—Molucca passage to Manila, No. 944; Sulu or Mindoro sea, No. 2578 : Also, List of Lights, part VI, 1905, No. 593; and Eastern Archipelago, part I, 1902, page 280.

PACIFIC OCEAN—The Philippine islands—Luzon, Manila bay.

Port Kavite—Wreck removed—Buoy withdrawn.

No. 111 (first publication).—With reference to Notice to Mariners No. 434, dated 20th December 1904, issued by this Office, the British Admiralty has given further notice (No 174 of 1905) that the wreck of the *San Juan de Ulloa* in Kafiaosc bay, port Kavite, having been removed, the buoy marking the position and formerly moored at a distance of 2½ cables S 8° W. from Sangley point light-house has been withdrawn.

Approximate position, lat. 14° 29¼′ N., long. 120° 54¼′ E.

(*Variation 1 Easterly in 1905.*)

This Notice affects the following Admiralty Chart :—Port Kavite, No. 975 Also China Sea, vol II, 1899, page 307; and Eastern Archipelago, part I, 1902, page 61.

PACIFIC OCEAN—THE PHILIPPINE ISLANDS—LUZON.

Manila breakwater—Wreck to the westward—Buoy.

No. 112 (first publication).—The British Admiralty has given notice (No. 176 of 1905) that the wreck of the brigantine *Flores de Maria* lies sunk, with the foremast above water, to the westward of Manila breakwater now under construction; a buoy, painted in red and black horizontal bands, has been moored in a depth of 30 feet about 30 yards south-westward from the wreck, in a position from which the light on the northern mole at the entrance to Pasig river bears N. 20° E., distant 1⅛ miles, and Ermita church N. 78° E.

Approximate position, lat. 14° 35′ N., long. 120° 56¼′ E.

(*Variation 1° Easterly in 1905.*)

This Notice affects the following Admiralty Chart:—Manila bay, No. 976: Also, China Sea, vol. II, 1899, page 310; and Eastern Archipelago, part I, 1902, page 65.

CHINA, SOUTH-EAST COAST.

Cape of Good Hope—Amended position of wreck to the south-eastward.

No. 113 (first publication).—With reference to Notice to Mariners No. 103, dated 1st April 1905, issued by this Office, the British Admiralty has given further notice (No. 177 of 1905) that a wreck, assumed to be that of the S.S *Workfield*, lies sunk with two masts above water in a position from which Cape of Good Hope bears N. 17° W., distant about 7⅛ miles.

Approximate position, lat. 23° 7′ N., long 116° 51′ E.

(*Variation Nil in 1905.*)

This Notice affects the following Admiralty Charts:—Formosa island, &c., No. 1968; Hong-Kong to the Brothers, No. 1962: Also, China Sea Directory, vol. III, 1904, page 147.

PACIFIC OCEAN—MARSHALL ISLANDS.

Arhno Atoll—Amended position of reef reported to the south-eastward.

No. 114 (first publication).—With reference to Notice to Mariners No. 284, dated 19th August 1904, issued by this Office, the British Admiralty has given further notice (No. 178 of 1905) from an examination of the reckoning kept by the Master of the Schooner *Neptune*, the reef he reported that he had seen south-eastward of Arhno Atoll, Marshall islands, is situated approximately in lat. 7° 6′ N., long. 172° 25′ E., and not in lat. 6° 49′ N., long. 174° 20′ E., as before stated. The reef was searched for in the amended position however by H.I.G.M.S. *Condor*, without success; but as the natives of that Atoll state that there is a reef in this locality, it has been placed on the chart with P.D. against it in the amended position.

This Notice affects the following Admiralty Charts:—Atlantic and Indian oceans No 2483; Pacific ocean, No. 2683; Pacific ocean, north-west, No. 781; Marshall islands No. 983: Also, Pacific Islands, vol. II, 1900, page 274.

CHINA, EAST COAST—MIRS BAY.

Tolo channel—Ledge extending from point.

No. 115 (first publication).—The British Admiralty has given notice (No. 179 of 1905) of the existence of a ledge of rocks in Tolo channel, Mirs bay, extending 150 yards in a S 69° W direction from the point (45 feet) situated at a distance of 7⅛ cables N. 68° W. from Mount Hallowes. This ledge, which is 15 yards wide, has a depth of 9 feet over it at its outer extremity, and about midway between its extremity and the point there is a rock awash at low-water springs.

Approximate position, lat. 22° 27½′ N., long. 114° 18′ E.

(*Variation Nil in 1905.*)

This Notice affects the following Admiralty Chart:—Tolo harbour, No. 3329: Also, China Sea Directory, vol. III, 1904, page 131.

NEW ZEALAND—NORTH ISLAND—AUCKLAND APPROACH.

Whangaparaoa peninsula—Spit extending from—.

No. 116 (first publication).—The British Admiralty has given notice (No. 180 of 1905) that a sand spit, with a depth of 4 to 6 fathoms over it, extends 7 cables in a south-easterly

direction from the south-eastern extremity of Whangaparaoa peninsula; from the end of the spit, where there is a depth of 4 fathoms, Tiri Tiri light bears N. 50° E., distant 3 miles.

Approximate position, lat. 36° 37′ 40″ S., long. 174° 51′ 50″ E.

(*Variation 14° Easterly in 1905.*)

This Notice affects the following Admiralty Chart:—Tutukaka head to Mayor island No. 2543: Also New Zealand Pilot, 1901, page 48.

CHINA SEA—FORMOSA (TAIWAN).

Ke lung harbour—Area of submarine defence—Regulations for passing through.

No. 117 (first publication).—The British Admiralty has given notice (No. 192 of 1905) that the area of submarine defence of Ke lung harbour is bounded approximately by a line drawn in a N. 6° W. direction from Rokohei kaku to the north extreme of the Ke lung islands (Keiro to), and another line drawn from the north extreme of the Ke lung islands in a S. 78° W. direction to a point situated about 2¼ miles north-westward from Banjintai Bi lighthouse.

Approximate position, Banjintai light, lat. 25° 9′ N., long. 121° 44½ E.

The following regulations are to be observed by vessels desiring to enter or leave Ke lung harbour:—

(1) The area, contained within the abovementioned lines and the shore, is under control of the officer in charge of the Ke lung special submarine mine defence, who is empowered, should necessity arise, to prohibit vessels passing through or anchoring in the prescribed area, excepting in the positions assigned to them.

(2) All vessels inward or outward bound, with the exception of regular mail steamers, and vessels belonging to Government departments, must obtain permission of the officer in charge to enter this area.

(3) No vessels, excepting those belonging to the Army and Navy, should enter this area at night time (sunset to sunrise) without permission.

(4) Vessels proceeding through this area must do so at a speed not exceeding 5 knots.

(5) Fishing, except within the limits specially notified, is prohibited over this area.

This Notice affects the following Admiralty Charts:—Ockseu island to Tung yung, No. 1761; Ke lung harbour, No. 2618: Also, China Sea Directory, vol. III, 1904, page 261.

CHINA—HONG KONG APPROACH—MAWAN ISLAND

Kap shui mun (Kap sing mun) light—Alteration in—.

No. 118 (first publication).—The British Admiralty has given notice (No. 207 of 1905), that the two white fixed lights at present exhibited from the western point of Mawan island will be replaced by a *red fixed* dioptric light of the 6th order, elevated 50 feet above high water, and visible in clear weather from a distance of 6 miles. It will be shown from a white mast erected in the same position. There is a white hut at the foot of the mast.

Approximate position, lat. 22° 21′ N., long. 114° 3½′ E.

This Notice affects the following Admiralty Chart:—Approaches to Hong Kong, No. 1180: Also, List of Lights, part VI, 1905, No. 780a; China Sea Directory, vol. III, 1904, page 68.

AUSTRALIA, SOUTH—SPENCER GULF—APPROACH TO PORT LINCOLN.

Cape Donnington—Proposed establishment of a white light.

No. 119 (first publication).—The President of the Marine Board, Port Adelaide, has given notice (No. 3 of 1905) that it is proposed to establish, on Cape Donnington, a White Light, showing red sectors over Dangerous Reef and Boston Island.

Further particulars will be published.

This affects Admiralty Chart No. 2389B.

AUSTRALIA, SOUTH—Spencer gulf.

Secret Rock—A pile beacon to be placed.

No. 120 (first publication).—The President, Marine Board, Port Adelaide, has given notice (No. 4 of 1905), informing Masters of vessels and others that it is intended on the 10th instant, circumstances permitting, to place a Pile Beacon to mark the position of the Secret Rock.

The Beacon, having a diamond-shaped head and painted black, will be erected in lat. 34° 31′ 15″ S., long 136° 7′ 30″ E. (approximate), and on the eastern edge of the rock in 10ft. L.W.S., with Point Bolingbroke bearing S. 42° W., two miles distant, and the centre of Kirkly Island E. 18° S., distant five miles.

This affects Admiralty Chart No. 2389B.

AUSTRALIA, SOUTH—Gulf St. Vincent.

Port Adelaide—Approach to Semaphore anchorage.

No. 121 (first publication).—The President, Marine Board, Port Adelaide, has given notice (No. 6 of 1905) that recent soundings show about 6in. less water on the four (4) fathom shoal than indicated by Admiralty Charts Nos. 1752 and 2389B Masters of heavy draught vessels should, therefore, when approaching the anchorage (especially near low water), not bring the old Port Adelaide Lighthouse or the light thereon on a bearing north of N.E. by E. until the green light on the Semaphore Jetty bears S.E. or the two red lights are in line. They may then steer in and select an anchorage according to the vessel's draught.

Vessels leaving the anchorage should steer out N.W. until the above-mentioned bearings are on.

The shoal spot referred to bears from the lighthouse on Wonga Shoal N. 33° 30′ W., distant about 1·3 miles, and from the old structure S. 48° W., distant about 1·9 miles.

This affects Admiralty Charts Nos. 1752 and 2389B.

CHINA—South-east coast.

Cape of Good Hope—Wreck to the south-eastward.

No. 103 (second publication).—The British Admiralty has given notice (No. 163 of 1905) that the wreck of the S.S. *Workfield* lies sunk in a depth of 18 fathoms in a position from which Cape of Good Hope bears N. 45° W., distant about 15 miles.

Approximate position, lat. 23° 3⅓′ N., long. 116° 59¾′ E.

(*Variation Nil in 1905.*)

This Notice affects the following Admiralty Charts:—Formosa island, &c., No. 1968; Hong-Kong to the Brothers, No. 1968; Also China Sea Directory, vol. III, 1904, page 147.

BAY OF BENGAL—Chittagong coast.

Karnafuli river—Depth of water in the channels.

No. 104 (second publication).—The Port Officer, Chittagong, has given notice that the following depth of water was found in the channels by soundings taken on the 24th March and reduced to zero:—

	Ft.	in.
Track No. 1—Outer bar—		
Disc on diamond	13	0
Track No. 2—Inner bar—		
Disc on diamond	11	6
Ditto Batten beacon on pillar	12	0
Track No. 3—		
Triangle on cross and ball	16	0
Track No. 4—Guptakhally crossing—		
Tripod on diamond	16	0

AUSTRALIA—Queensland—Port Douglas.

New entrance channel—Directions to enter the inlet.

No. 93 (third publication).—The Port Master, Brisbane, has given notice (No. 1 of 1905) that, on and after 1st March, the small light showing a white sector, and the leading beacons carrying green lights at night, for crossing the Bar, will be discontinued, and a pair of white triangular beacons, with vertical black stripe in centre, carrying white lights at night, will be exhibited from Magazine Islet, bearing in line N. E. by N. ½ N.

These lights and beacons in line lead through the centre of the recently dredged channel, 200 feet wide, across the Bar, with a depth of 10 feet at L. W. S. The depth in the Inlet up to the wharves remains as before, *i.e.*, 5 to 6 feet at L. W. S. Dredging operations to form a basin will continue in progress.

Directions.—To enter the Inlet, bring the pair of triangular beacons or white lights at night in line bearing N. E. by N. ½ N. when approaching Island Point. Keep these marks in line until the existing pair of beacons, carrying red lights at night, bearing N. ½ E., come in line, when proceed on the latter line as heretofore.

Australia Directory, vol. 2; Admiralty Chart No. 2924 (old).

AUSTRALIA—Wide Bay Bar.

Hook point—The square beacons to be kept open.

No. 94 (third publication).—With reference to Notice to Mariners No. 321, dated 24th September 1904, issued by this office, the Port Master, Brisbane, has given further notice (No. 2 of 1905) that, when crossing Wide Bay Bar, the square beacons on Hook Point must now be kept open once their own width to the Northward.

Charts affected—Nos. 1030 and 1068; Australia Directory, vol. 2.

PACIFIC OCEAN—Fiji islands.

Levuka harbour—Alteration in lights.

No. 95 (third publication).—The British Admiralty has given notice (No. 145 of 1905) that, after 31st December 1904, the colour of the light (*fixed*) situated 1½ cables S. 50° E. from Nasova flagstaff would be changed from green to *red.*

Approximate position, lat. 17° 41½′ S., long. 178° 51½′ E.

Also, that after the same date a *green fixed* light would be established on the south-eastern extremity of Queen's wharf, situated about half a cable N. 28° E. from Naquima point. This is in addition to the green light on the north-east extreme of the same wharf.

(*Variation 10° Easterly in 1905.*)

This Notice affects the following Admiralty Chart:—Ovalau, No. 1249; Levuka harbour, No. 1244: Also, List of Lights, part VI, 1905, No. 1620, page 291; part VII, No. 534, page 105; and Pacific Islands, vol. II, 1900, pages 151, 150.

CHINA, NORTH COAST—Wei Hai Wei, western entrance.

Non-existence of shoal.

No. 96 (third publication).—The British Admiralty has given notice (No. 147 of 1905) that a careful search made by divers, and also by use of the lead, failed to find the 25 feet patch shown on the Chart at a distance of 2½ cables S. 60° E. from Grafton point in the western entrance to Wei Hai Wei; it is considered, therefore, that this solitary sounding was due to an error in the original copy of the survey sent into Office, and should have been 35 instead of 25; it has in consequence been expunged from the Chart. There is, however, a depth of 30 feet, rock, to the north-eastward of the position where 25 feet was shown. From it the north-eastern extreme of Pei Shan point bears N. 32° W., distant 3¾ cables, and the south extreme of King Hall point S. 74° W.

Approximate position, lat. 37° 31½′ N., long. 122° 9½′ E.

(*Variation 5° Westerly in 1905.*)

This Notice affects the following Admiralty Chart:—Wei Hai Wei anchorage, No. 3025: Also, China Sea Directory, vol. III, 1904, page 556.

AFRICA, SOUTH—Cape Colony.

Simon's bay—Dockyard extension works—Light-buoy established.

No. 97 (third publication).—With reference to Notice to Mariners No. 397, dated 18th November 1904, issued by this Office, the British Admiralty has given further notice

(No. 149 of 1905) that a light-buoy exhibiting a *white fixed* light has been established to mark the extremity of the extension works in progress off Block House point; it is situated at a distance of 3¾ cables N. 14° E. from the Block House on Block House point.

Approximate position, lat. 34° 11¼′ S., long. 18° 26½′ E.

(*Variation 29° Westerly in 1905.*)

CAUTION.—Vessels must not pass to the southward of this light-buoy.

This Notice affects the following Admiralty Chart:—Simon's bay, No. 1849: Also, Africa Pilot, part II, 1901, page 343; Africa Pilot, part III, 1897, page 72; and Supplement, 1900, page 6.

PACIFIC OCEAN—NEW HEBRIDES GROUP.

Espiritu Santo island, Baldwin cove—Rock reported.

Aoba island—Rock to the north-westward.

No. 98 (third publication).—The British Admiralty has given notice (No. 151 of 1905) of the existence of a coral knoll, with a depth of 5 feet over it, in Baldwin cove, situated in a position from which the rock (dries 3 feet) on Richards reef bears S. 10° E., distant 1⅛ cables, and Conspicuous tree in line with an island (30 feet) S. 81° W.

This head, which is 2 or 3 yards in extent, is steep-to, and has depths of 9 to 10 fathoms around it.

Approximate position, lat. 15° 35′ S., long. 167° 1½′ E.

Also, that he had received reliable information of the existence of a pinnacle rock, with a depth of 5 feet over it, situated about 5 miles N. W. from Lorni bluff, Aoba island.

There is a depth of 30 fathoms close to this rock.

Approximate position, lat. 15° 17′ S., long. 167° 44½′ E.

(*Variation 9° Easterly in 1905.*)

This Notice affects the following Admiralty Charts:—Plan of Baldwin cove on Chart No. 1486; New Hebrides island, No. 3033: Also, Pacific Islands, vol. II, 1900, pages 486, 449.

CHINA, EAST COAST—SHANTUNG.

Kyau Chau bay—Great harbour entrance—Shoal formed in approach.

No. 99 (third publication).—The British Admiralty has given notice (No. 153 of 1905) that a shoal has been formed by the discharge of spoil on the bank opposite to the entrance of the Great harbour, Kyau Chau bay, the position of this shoal is marked by a spar beacon with a broom as a topmark, erected in a depth of 2 feet at low water, and situated at a distance of 3⅛ miles N. 12° E. from Yu nui san light.

Approximate position on Chart No. 857, lat. 36° 5′ 53″ N., long. 120° 18′ 5″ E.

(*Variation 3° Westerly in 1905.*)

This Notice affects the following Admiralty Chart:—Kyau Chau bay, No. 857: Also, China Sea Directory, vol. III, 1904, page 530.

KOREA, WEST COAST—NAJU GROUP.

Moji do—Shoal to the north-eastward.

No. 100 (third publication).—The British Admiralty has given notice (No. 156 of 1905) of the existence of a shoal, with a depth of 1½ fathoms over it, situated at a distance of about 8 cables S. 76° E. from the northern extremity of Moji do, Naju group, Korea.

Approximate position, lat. 34° 38½′ N., long. 125° 58½′ E.

This shoal appears to be the outer extremity of a ledge which extends for about three-quarters of a mile in an E.N.E. direction from the north-east point of the island.

(*Variation 4° Westerly in 1905.*)

This Notice affects the following Admiralty Charts:—Korean archipelago, No. 104; western coast of Korea, No. 913; Also, Sailing Directions for, &c., Korea, &c., 1904, page 74.

EASTERN ARCHIPELAGO—STRAIT OF MALACCA—STRAITS SETTLEMENTS.

Kwala Muar—Light-buoy established at entrance.

No. 101 (third publication).—The British Admiralty has given notice (No. 158 of 1905) that, on 1st January 1905, a light-buoy was established at the entrance of Kwala Muar, in approximately lat. 2° 2′ 0″ N., long. 102° 31′ 40″ E. The character of the light exhibited is not stated, but it is presumed that it is *white fixed.*

This Notice affects the following Admiralty Chart:—Cape Rachado to Singapore, No. 795: Also, China Sea Directory, vol. I, 1896, page 190; and Supplement, 1899, page 14.

CHINA—HONG KONG.

Green island light—Arc of visibility.

No. 102 (third publication).—The British Admiralty has given notice (No. 162 of 1905) that during the construction of a new lighthouse tower, Green island light will not show red and white sectors as before, but will be only visible as a *white fixed* light from the bearing of S. 76° E., through east and north, to N. 84° W., being obscured in other directions by the new building.

Approximate position, lat. 22° 17½′ N., long. 114° 6½′ E.

(*Variation 1° Easterly in 1905.*)

This Notice affects the following Admiralty Chart:—Hong Kong, Nos. 1466 and 3280: Also, List of Lights, part VI, 1905, No. 721, China Sea Directory, vol. III, 1904, page 68.

E. J. BEAUMONT, COMDR., R.I.M.,
Port Officer of Calcutta.

APPENDIX TO

The Calcutta Gazette.

WEDNESDAY, APRIL 12, 1905.

GENERAL JURY LIST.

LIST of Persons liable to serve on Common Juries in the High Court of Judicature at Fort William in Bengal, for the year ensuing from 1st May 1905, pursuant to Act V of 1898.

No	Names.	Style or Calling	Residence or place of business.	Religion.	Remarks.
	A				
*** 1	Abbey, F A	... Clerk, Foreign Office	... Esplanade West	... Christian	Revised lists will be published on the 26th day of April. Any person who deems himself for any reason wrongly included in this list should address the Clerk of the Crown on the subject immediately, as the revised list will be final. Errors in name and description can be corrected on communication to the office of the Clerk of the Crown.
2	Abbey-Yates, R	... Superintendent of Ledgers, office of Reporter on Economic Products to the Government of India.	1 Sudder Street	... ditto	
3	Abbott, C A	... Assistant, Ralli Brothers	... 1 & 2, Church Lane	... ditto	
4	Abbott, G F	... Assistant, *Statesman* Office	... 3, Chowringhee	... ditto	
5	Abrahams, A S	... Assistant, E'D Sassoon & Co	... 2 & 3, Clive Row	... Hebrew	
6	Acton, Ernest	... Manager, Caledonian Steam Printing Works.	3, Wellesley Place	... Christian	

No	Names	Style or Calling.	Residence or place of business.	Religion.	Remarks
	A				
7	Acton, H T	... Assistant, Balmer, Lawrie and Co. .	103, Clive Street ...	Christian	
8	Adams, A G	... Assistant, Harold & Co ...	3, Dalhousie Square ...	ditto	
9	Adkins, F E	... Assistant, Morrison and Cottle ...	2, Esplanade Row, East ...	ditto	
10	Adolphus, H V	... Inspector of Vacant Houses, Municipal Office.	Municipal office ...	ditto	
11	Adshed, E E	... Assistant, Arlington & Co ...	5, Dalhousie Square ...	ditto	
12	Advani, B N	... Chief Clerk, Chief Engineer's Office, E I R	E I R House ...	ditto	
13	Agacy, C L	... Measurer, Licensed Measurers' Department, Bengal Chamber of Commerce.	2, Clive Street ...	ditto	
14	Agacy, H O	... Assistant, McLeod & Co ...	31, Dalhousie Square ...	ditto	
15	Ainsley, Capt. J	... Assistant, Macneill & Co ...	2, Clive Ghât Street ...	ditto	
16	Akers, A G	... Caretaker, Hongkong and Shanghai Banking Corporation.	31, Dalhousie Square ...	ditto	
17	Albert, A	... Assistant, Bathgate & Co ...	19, Old Court House Street ...	ditto	
18	Albert, H	... 3rd Grade Accountant, Office of Controller of Military Accounts, E. C.	3, Koila Ghât Street ...	ditto	
*.*19	Albert, R C	... Clerk, Foreign Office ...	Esplanade, West ...	ditto	
20	Alexander, C	... Assistant, George Henderson & Co	100, Clive Street ...	ditto	
21	Alexander, G F L	... Assistant, Balmer, Lawrie & Co ...	103, Clive Street ...	ditto	
22	Allan, H E	... Accountant, 3rd grade, Military Accounts Department, Ordnance and Clothing Branches.	Military Accounts Department Buildings, Koila Ghât Street.	ditto	
23	Allen, C J	... Assistant, W Leslie & Co ...	2, Chowringhee ...	ditto	
24	Allen, F W	... Assistant, Francis, Harrison, Hathaway & Co.	13, Government Place, East ..	ditto	
25	Allen, F W	... Pipe layer, Municipal Office ...	19, Ram Sanker Roy's Lane	ditto	
26	Allen, J R G	.. Assistant Accountant, Bank of Bengal.	Strand ...	ditto	
27	Allen R C	... Sub-Accountant, Hongkong and Shanghai Banking Corporation.	31, Dalhousie Square ...	ditto	
28	Allison, J E	... Measurer, Licensed Measurers' Department, Bengal Chamber of Commerce.	2, Clive Street ...	ditto	
29	Ambrose, T	... Assistant, Mackinnon, Mackenzie & Co.	16, Strand ...	ditto	

30	Anderson, M	...	Boiler Inspector, Office of the Commissioners for the Inspection of Steam-boilers.	309, Bow Bazar Street	...	ditto
31	Anderson, R	...	Assistant, Mackintosh, Burn & Co	8, Esplanade, East	...	ditto
32	Anderson, R P	...	Assistant, Shaw, Wallace & Co	20, Strand Road	...	ditto
33	Anderson, S G	...	Assistant, Williamson, Magor & Co	4, Mangoe Lane	...	ditto
34	Anderson, W	...	Partner, Hall and Anderson	31, Chowringhee	...	ditto
35	Andrews, C	...	Assistant Litho Printer, Surveyor-General's Office.	14, Wood Street	...	ditto
36	Andrews, E J	...	Assistant, Francis, Harrison, Hathaway & Co.	13, Government Place, East	...	ditto
37	Andrews, H M	...	ditto	ditto	...	ditto
38	Andrews, P T	...	ditto	ditto	...	ditto
39	Annan, D Y	...	Assistant, Jessop & Co, Ld	93, Clive Street	...	ditto
40	Annett, A H	...	Assistant, Atkinson Brothers, Ld	13, Chowringhee	...	ditto
41	Antram, E W	...	Assistant, Poppe, Delius & Co	15, Clive Row	...	ditto
42	Apcar, M V	...	M V Apcar & Co	11-1, Sukeas' Lane	...	Armenian
43	Arakie, A E	...	Assistant, Shrager Brothers	28, Dalhousie Square	...	Christian
44	Archibald, J H G	...	Assistant, Hall and Anderson	31, Chowringhee	...	ditto
45	Armitage, C C	...	Assistant, Kettlewell, Bullen & Co	21, Strand Road	...	ditto
46	Armstrong, G B	...	Assistant, Hamilton & Co	8, Old Court House Street	...	ditto
47	Asser, O	...	Assistant, J C Duffus & Co	10, Clive Row	...	ditto
48	Atkins, C G	...	Head Verifier, Audit Department, E I R	E I R House	...	ditto
49	Atkinson, C M	...	Assistant, A & J Main & Co, Ld.	31, Dalhousie Square	...	ditto
50	Atkinson, C V	...	Assistant, Atkinson Brothers, Ld	13, Chowringhee	...	ditto
51	Atkinson, E C	...	Assistant, Thacker, Spink & Co	5, Government Place	...	ditto
52	Atkinson, J H	...	Firm of Atkinson Brothers, Ld	13, Chowringhee	...	ditto
53	Atkinson, J J	...	Engineer, Kilburn & Co	4, Fairlie Place	...	ditto
54	Audsley, A E MacA	...	Registrar, Geological Survey Office	Museum	...	ditto
55	Augier, E G	...	Clerk, Controller of Stores' Office, E I R.	E I R House	...	ditto
56	Augustin, A H	...	Jr. 3rd Class Clerk, Lower Division, Office of Secretary to the Government of India, Military Department.	6, Esplanade, East	...	ditto

No.	Names.	Style or Calling.	Residence or place of business.	Religion.	Remarks.
	B				
101	Bearman, C E H	... Assistant, Shaw, Wallace & Co ...	20, Strand Road ...	Christian	
102	Beath, C T	... Assistant Accountant, Mercantile Bank of India, Ld.	28, Dalhouse Square ...	ditto	
103	Beaumont, W C	... Manager, *Statesman* Office ...	3, Chowringhee ...	ditto	
104	Beaver, Geo H	... Managing Partner, Geo Beaver & Co	8-1, Dalhousie Square, East ...	ditto	
105	Beck, N	... Assistant, F & C Osler ...	12, Old Court House Street ...	ditto	
106	Beddoe, H C	... Deputy Jetty Superintendent, Office of the Calcutta Port Commissioners.	Strand Road ...	ditto	
107	Bedford, M P	... Clerk, Calcutta Mint ...	47, Strand Road, North ...	ditto	
108	Behrens, Harold J	... Assistant, Sir Jacob Behrens & Sons	3, Commercial Buildings ...	ditto	
109	Bell, C W	... Assistant, Great Eastern Hotel Co, Ld.	1, 2 & 3, Old Court House Street.	ditto	
110	Bell, E J	... Assistant, Alex. Brault & Co ...	3, Waterloo Street ...	ditto	
111	Bell, E W	... Assistant Accountant, Delhi and London Bank, Ld.	4, Council House Street ...	ditto	
112	Bell, J W A	... Assistant, Mackinnon, Mackenzie & Co	16, Strand ...	ditto	
113	Bell, T A	... Assistant, F W Heilgers & Co ...	136, Canning Street ...	ditto	
**114	Bellamy, W A	... 5th Class Senior Clerk, Upper Division, Office of Secretary to the Government of India, Military Department.	6, Esplanade, East ...	ditto	
**115	Belletty, J R	... Assistant, Bengal Secretariat, Judicial, Political and Appointment Departments.	Writers' Buildings ...	ditto	
116	Belletty, M C	... Head Clerk, Mathematical Instrument Department, Surveyor-General's Office.	15, Wood Street ...	ditto	
117	Benjamin, B H	... Assistant, David Sassoon & Co, Ld ...	3, Fairlie Place ...	Jew	
118	Bennett, A H	... Assistant, Whiteaway, Laidlaw & Co	4, 5, and 6, Chowringhee ...	Christian	
119	Benson, J	... Assistant, Ahmuty & Co	6, Church Lane ...	ditto	
120	Bergmann, Alfred	... Clerk, B Rigold and Bergmann ...	142, Radha Bazar Street ...	ditto	
121	Berry, M J	... Assistant, Lovelock & Lewes ...	25, Mangoe Lane ...	ditto	
122	Bibra, E V	... Assistant, Cooke & Kelvey ...	20, Old Court House Street ...	ditto	
123	Bindloss, E H	... Partner, Bindloss & Co ...	2, Commercial Buildings ...	ditto	
124	Binning, F J	... Assistant, J Thomas & Co ...	8, Mission Row ...	ditto	
125	Birch, R W	... Assistant, Kiernander & Co ...	7-1, Lyons Range ...	ditto	

126	Bird, F H	...	Firm of Frank H Bird & Co	...	167, Canning Street	... ditto
127	Bird, H L	...	2nd Superintendent, Excise Preventive Establishment, Calcutta Collectorate.		3, Charnock Place	... ditto
128	Bishop, E M	...	Assistant, Hongkong and Shanghai Banking Corporation		31, Dalhousie Square	... ditto
129	Bishop, W E	...	Manager, Traill & Co	...	20, British Indian Street	... ditto
130	Black, E J	...	3rd Grade Accountant, Office of Controller of Military Accounts, E C.		3, Koila Ghât Street	... ditto
131	Black, J	...	Assistant, Shaw, Wallace & Co	...	20, Strand Road	... ditto
132	Black, J C	...	Assistant, Martin & Co	...	Jackson House	... ditto
133	Black, O E	...	Jr. 1st Class Clerk, Lower Division, Office of Secretary to the Government of India, Military Department.		6, Esplanade, East	... ditto
134	Blackburn, G A	...	Assistant, Grossmann & Co	...	2, Fairlie Place	... ditto
135	Blackburn, H P	...	Assistant, Mitchell Bardsley & Co	...	5, Clive Ghât Street	... ditto
136	Blainville, R N	...	Assistant, Shaw, Wallace & Co	...	20, Strand Road	... ditto
137	Blake, C S	...	Partner, Lemon, Blake & Co	...	3-1, Wellesley Place	... ditto
138	Blake, J H	...	Electric Engineer, Walter, Locke & Co, Ld.		4, Esplanade	... ditto
*.*139	Blaker, R H	...	Superintendent, Home Department	...	Home Department	... ditto
*.*140	Blaker, S A	...	Superintendent, Foreign Office	...	Esplanade, West	... ditto
141	Bland, G E	...	Assistant, Balmer, Lawrie & Co	...	103, Clive Street	... ditto
*.*142	Blewitt, E W	...	Clerk, Home Department	..	Home Department	... ditto
143	Blick, F	...	Assistant, Martin & Co	...	Jackson House	... ditto
144	Blond, F	...	Accountant, 3rd grade, Office of Examiner of Ordnance and Clothing Branches.		Military Accounts Department Buildings, Koila Ghât Street.	ditto
145	Blount, N	...	Chief Accountant, Commercial Bank of India, Ld		5, Fairlie Place	... ditto
146	Blumenthal, P	...	Assistant, Blackwood, Blackwood & Co.		12, Clive Street	... ditto
147	Blyth, A A	...	Head Clerk, Office of Reporter on Economic Products to the Government of India.		1, Sudder Street	... ditto
148	Blythe, H J	...	Hackney Carriage Inspector, Calcutta Corporation.		Municipal Office	... ditto

No.	Names.	Style or Calling.	Residence or place of business.	Religion.	Remarks.
	B				
**149	Bolst, H G	... Assistant, Office of Secretary to the Government of India, Revenue and Agricultural Department, Forest Branch.	Imperial Secretariat Buildings	Christian.	
150	Bolton, C G	... Printer, Mackenzie, Lyall & Co ...	2, Lyons Range ...	ditto	
**151	Bonnaud, E A	... 6th class Clerk, Office of Secretary to the Government of India, P W D.	Imperial Secretariat Buildings	ditto	
**152	Bonnaud, W A	... Assistant, Bengal Office, Judicial, Political and Appointment Departments.	Writers' Buildings ...	ditto	
153	Booth, H	... Manager, Struthers & Co, Ld ...	28, Strand Road ...	ditto	
154	Botellho, C W	... Assistant, R S Hart Brothers ...	157, Dhurrumtollah Street ...	ditto	
155	Botten, E E	... Assistant, Macneill & Co ...	2, Clive Ghât Street ...	ditto	
**156	Bowder, F H	... Clerk, Office of Accountant-General, Public Works Department.	Imperial Secretariat Buildings	ditto	
**157	Bowder, J K E	... Superintendent, Office of Secretary to the Government of India, Revenue and Agricultural Department, Emigration Branch.	Imperial Secretariat Buildings	ditto	
158	Bowrey, E W	... Assistant, McLeod & Co ...	31, Dalhousie Square ...	ditto	
159	Bowyer, G F	... Assistant, Grand Hotel ...	16, Chowringhee ...	ditto	
160	Boyd, G D	... Measurer, Licensed Measurers' Department, Bengal Chamber of Commerce.	2, Clive Street ...	ditto	
161	Boyd, H W	... Assistant, O Steel & Co ...	14, Old Court House Street ...	ditto	
162	Boyes, J R	... Sub-Accountant, Hongkong and Shanghai Banking Corporation.	31, Dalhousie Square ...	ditto	
163	Bradey, G W C	... Assistant, Office of Secretary to the Government of India, Finance and Commerce Department.	Treasury Buildings ...	ditto	
164	Braithwaite, W D	... Assistant, Shaw, Wallace & Co ...	20, Strand Road ...	ditto	
165	Brakenridge, D H	... Assistant, J C Duffus & Co ...	10, Clive Row ...	ditto	
166	Brame, Captain A	... Marine Superintendent, I G N & Ry Co.	4, Fairlie Place ...	ditto	
167	Bramham, J	... Assistant, J B Norton & Sons ...	1, Old Court House Corner ...	ditto	
168	Brandon, H	... Assistant, Grand Hotel ...	16, Chowringhee ...	ditto	

169	Bray, E H	... Assistant, Gillanders, Arbuthnot & Co	8, Clive Street	...	ditto
170	Bremner, W F	... Assistant, Turner, Morrison & Co ...	6, Lyons Range	...	ditto
171	Bretton, G A	... Assistant, Macneill & Co ...	2, Clive Ghât Street	...	ditto
172	Brewer, H	... Assistant, Thos Cook & Son ...	9, Old Court House Street	...	ditto
173	Bridgnell, Chas	... Assistant, F Kapp & Co ...	3, Humayon Place	...	ditto
**174	Brinkworth, W J	... 5th Class Clerk, Secretariat, Government of India, Public Works Department.	Imperial Secretariat Buildings		ditto
175	Brodie, J S	... Assistant, Andrew Yule & Co ...	7, Clive Row	...	ditto
176	Brodie, Wm G	... Assistant, Andrew Yule & Co ...	Ditto	...	ditto
177	Bromley, H T	... City Architect and Building Surveyor, Municipal Office.	5, Corporation Street	...	ditto
178	Brookes, A S	... Assistant, Thacker, Spink & Co ...	5, Government Place	...	ditto
179	Brown, A	... Accountant, Alliance Bank of Simla, Limited.	8, Council House Street	...	ditto
180	Brown, H	... Assistant, Jessop & Co, Ld ...	93, Clive Street	...	ditto
181	Brown, P H	... Assistant, Mackinnon, Mackenzie & Co	16, Strand	...	ditto
182	Browne, A A	... Assistant, Army and Navy Co-operative Society, Ld.	41, Chowringhee	...	ditto
183	Browne, T H L	... Assistant, O Steel & Co ...	14, Old Court House Street	...	ditto
184	Browne, W H	... Architect, Martin & Co ...	Jackson House	...	ditto
185	Bruce, A F	... Assistant, J Thomas & Co ...	8, Mission Row	...	ditto
186	Bruce, A M	... Accountant, Hongkong and Shanghai Banking Corporation.	31, Dalhousie Square	...	ditto
187	Bruce, W H	... Assistant, Kilburn & Co ...	4, Fairlie Place	...	ditto
188	Buckland, F M	... Assistant, Jardine Skinner & Co ...	4, Clive Row	...	ditto
**189	Buckner, F P	... Clerk, Foreign Office ...	Esplanade, West	...	ditto
**190	Budd, R S	... Assistant, Bengal Secretariat, Judicial, Political and Appointment Departments.	Writers' Buildings	...	ditto
191	Bull, H F	... Assistant, Anderson, Wright & Co ...	22, Strand Road	...	ditto
192	Bull, H S	... Assistant, Bombay Co, Ld ...	7-1, Lyons Range	...	ditto
193	Bulley, W	... Assistant, Mackintosh, Burn & Co ...	8, Esplanade, East	...	ditto

No	Names.	Style or Calling	Residence or place of business.	Religion.	Remarks.
	B				
194	Burbidge, A	... Assistant, Traffic Manager, E I R	... E I R House ...	Christian	
195	Burbidge, F W	... Assistant, Kilburn & Co	... 4, Fairlie Place ...	ditto	
196	Burbidge, G C	... Assistant, John King & Co, Ld	... 40, Strand ...	ditto	
**197	Burbridge, R P D	.. 3rd Class Clerk, Office of Secretary to the Government of India, Public Works Department.	Imperial Secretariat Buildings	ditto	
198	Burgess, A	... Assistant, J Thomas & Co	... 8, Mission Row ...	ditto	
199	Burgess, R	... Assistant, Francis, Harrison, Hathaway & Co	13, Government Place, East ...	ditto	
200	Burke, W S	... Proprietor, *Indian Field*	... 1, Hare Street ...	ditto	
201	Burns, P	... Assistant, Mackintosh, Burn & Co	... 8, Esplanade, East ...	ditto	
202	Burrell, A St L M	... Assistant Examiner, Office of Controller of Military Accounts, Accounts Branch, E. C.	3, Koila Ghât Street ...	ditto	
203	Burress, W G	... Examiner, Office of Superintendent, Government Printing, India.	8, Hastings Street ...	ditto	
204	Burrows, L B	... Assistant, Office of Secretary to the Government of India, Finance and Commerce Department.	Treasury Buildings ...	ditto	
205	Bury, J	... Manager, Erasmus Jones	... 5, British Indian Street ...	ditto	
206	Bushby, F E	... Assistant, Steuart & Co	... 8, Old Court House Corner ...	ditto	
207	Butchart, J	... Assistant, Shrager Brothers	... 28, Dalhousie Square ...	ditto	
208	Butland, J	... Assistant, Whiteaway, Laidlaw & Co	4, 5, & 6, Chowringhee ...	ditto	
209	Butler, J	... Engineer, Oriental Telephone and Electric Co, Ld.	7, Pollock Street ...	ditto	
210	Butler, J A	... Ditto	... Ditto ...	ditto	
	C				
211	Caird, G	... Assistant, Jessop & Co, Ld	... 93, Clive Street ...	ditto	
212	Calderwood, D Y	... Cashier, John Dewar & Sons, Ld	... 10, Hare Street ...	ditto	
213	Caldwell, J	... Assistant Auditor, E I R	... E I R House ...	ditto	
214	Cameron, A P	... Assistant, Manager, James Simpson & Co, Ld.	32-1, Dalhousie Square ...	ditto	

**215	Cameron, C A	...	Assistant, Office of Secretary to Government of India, Revenue and Agricultural Department, Revenue Branch.	Imperial Secretariat Buildings		ditto
216	Cameron, D	...	Assistant, Struthers & Co, Ld ...	28, Strand Road	...	ditto
217	Cameron, J B	...	Assistant, Army & Navy Co-operative Society, Ld.	41, Chowringhee	...	ditto
218	Campagnac, W	...	Head Clerk, Mathematical Instrument Department, Surveyor-General's Office.	15, Wood Street	...	ditto
219	Campbell, C G	...	Gate Officer, Office of the Calcutta Port Commissioners.	Strand Road	...	ditto
**220	Campbell, H A C	...	4th Class Clerk, Office of Secretary to the Government of India, Public Works Department.	Imperial Secretariat Buildings		ditto
221	Campbell, J	...	Assistant, Mackinnon, Mackenzie & Co.	16, Strand	...	ditto
222	Campbell, J C	...	Assistant, Mackenzie, Lyall & Co ...	2, Lyons Range	...	ditto
223	Campbell, K	...	Assistant, Shaw, Wallace & Co ...	20, Strand Road	...	ditto
224	Campbell, T J	...	Assistant, G E Hotel Co, Ld ...	1, 2, & 3, Old Court House Street.		ditto
225	Cann, A E W	...	Engraver, Surveyor-General's Office, Engraving Department.	13, Wood Street	...	ditto
226	Cantopher, R	...	2nd Assistant to Mint Master ...	Strand	...	ditto
**227	Cantopher, R A	...	Examiner and Copyist, Home Department.	Home Department	...	ditto
**228	Carey, W C	...	7th Class Clerk, Secretariat, Government of India, P W D.	Imperial Secretariat Buildings		ditto
229	Carr, C A	...	Assistant, P & O S N Co ...	19, Strand Road	...	ditto
230	Carr, H W	...	Assistant, Balmer, Lawrie & Co ...	103, Clive Street	...	ditto
**231	Carr, W B	...	Jr. 3rd Class Clerk, Lower Division, Office of Secretary to the Government of India, Military Department.	6, Esplanade, East	...	ditto
232	Carritt, Chas	...	Managing Proprietor, *Indian Planting and Gardening.*	5-1, Council House Street	...	ditto

No.	Names.	Style or Calling.	Residence or place of business.	Religion.	Remarks.
	O				
233	Carroll, A J M ...	Assistant, Public Debt Office, Bank of Bengal.	Strand ...	Christian	
234	Carter, G H ...	Assistant, Andrew Yule & Co ...	7, Clive Row ...	ditto	
235	Carter, R ...	Assistant, Pigott, Chapman & Co ...	1, Mission Row ...	ditto	
236	Carter, R S ...	Assistant, Thacker, Spink & Co ...	5. Government Place ...	ditto	
337	Carter, W J ...	Assistant, G F Kellner & Co ...	32, Chowringhee ...	ditto	
238	Carville, A B ...	Clerk, Photographic and Lithographic Department, Surveyor-General's Office.	14, Wood Street ...	ditto	
239	Cassie, G J ...	Assistant Manager, Marshall Sons & Co, Ld.	99, Clive Street ...	ditto	
*240	Caston, H P ...	Clerk, Foreign Office ...	Esplanade, West ...	ditto	
241	Cathcart, M ...	Assistant, George Henderson & Co ...	100, Clive Street ...	ditto	
242	Chalmers, Jas. ...	Assistant, Mackinnon, Mackenzie & Co.	16, Strand ...	ditto	
243	Chambers, James Richard...	Assistant, Bengal Secretariat, Financial Department.	Writers' Buildings ...	ditto	
*244	Chambers, T ...	7th Class Clerk, Secretariat, Government of India, P W D.	Imperial Secretariat Buildings	ditto	
*245	Channon, F ...	Jr. 1st Class Clerk, Lower Division, Office of Secretary to the Government of India, Military Department.	6, Esplanade, East ...	ditto	
246	Chaplin, J ..	Assistant, Thacker, Spink & Co ...	5, Government Place ...	ditto	
247	Chapman, J A ...	Assistant Accountant, National Bank of India, Ld.	104, Clive Street ...	ditto	
248	Chermside, H L ...	Assistant, Turner Morrison & Co ...	6, Lyons Range ...	ditto	
249	Christensen, J A ...	Assistant, Davis Leech & Co ...	11, Government Place ...	ditto	
250	Christie, A J W ...	Assistant, Hoare, Miller & Co ...	38, Strand Road ...	ditto	
251	Chubb, R W ...	Assistant, Francis, Harrison, Hathaway & Co.	13, Government Place, East ...	ditto	

252	Clark, C S	...	Assistant, Branch Department, Bank of Bengal.	Strand ...	ditto
253	Clark, H J	...	Assistant Controller of Stores, E I R	E I R House ...	ditto
254	Clarke, A L	...	Assistant, Mackenzie, Lyall & Co ...	2, Lyons Range ...	ditto
**255	Clarke, D A	...	Clerk, Foreign Office ...	Esplanade, West ...	ditto
256	Clarke, F G	...	Assistant, O Steel & Co ...	14, Old Court House Street ...	ditto
257	Clarke, H	...	Assistant, Lovelock and Lewes ...	25, Mangoe Lane ..	ditto
258	Clarkson, W B	...	Assistant, R S Hart Brothers ...	157, Dhurrumtollah Street ...	ditto
259	Claudius, J E	...	Assistant, Board of Revenue, L P ...	2, Bankshall Street ...	ditto
260	Cleeve, T G	...	Assessor of Income-tax ...	3, Charnock Place ...	ditto
261	Coard, A R	...	Assistant Head Engraver, Surveyor-General's Office, Engraving Department.	13, Wood Street ...	ditto
262	Coard, S M	...	Head Engraver, Surveyor-General's Office, Engraving Department.	13, Wood Street ...	ditto
**263	Coates, G M	...	Clerk, Foreign office ...	Esplanade, West ...	ditto
264	Coates, S H	...	Assistant, Lovelock and Lewes ...	25, Mangoe Lane ...	ditto
265	Cockell, C F	...	Assistant, Allen Brothers & Co ...	1, New China Bazar Street ...	ditto
266	Cockell, N F	...	Assistant, Mackinnon, Mackenzie & Co	16, Strand ...	ditto
267	Cockell, N P	...	Assistant Accountant, Alliance Bank of Simla, Ld.	8, Council House Street ...	ditto
268	Cohen, A A	...	Proprietor, Aaron A Cohen & Co .	219, Old China Bazar Street ...	Jew
269	Cohen, I J	...	Merchant and Landholder ...	36-3, Emambagh Lane ...	ditto
270	Cohen, S R S	...	Assistant, E D Sassoon & Co ...	2 & 3, Clive Row ...	Hebrew
271	Colder, R C D	...	3rd grade Accountant, Office of Examiner, P W Accounts, Bengal.	8, Lyon's Range ...	Christian
272	Cole, William	...	Manager, Lampard, Clark & Co ...	1, Lall Bazar ...	ditto
273	Coleman, E	...	Assistant, Davenport & Co ...	101-1, Clive Street ...	ditto
274	Colley, T H	...	Boiler Inspector, Office of the Commissioners for the Inspection of Steam-boilers.	309, Bow Bazar Street ...	ditto
275	Collier F	...	Assistant, British American Tobacco Company, Ld.	95, Clive Street ...	ditto
276	Collier, G B	...	Assistant, Ralli Brothers ...	1 & 2, Church Lane ...	ditto
277	Collingridge, H	...	Assistant, Finlay, Muir & Co ...	1, Clive Street ...	ditto

No.	Names.	Style or Calling.	Residence or place of business.	Religion.	Remarks.
	O				
278	Collingwood, A F	... Assistant, Government Medical Store Department, B. C.	8, Wellesley Place ...	Christian	
279	Colllingwood, C H	... Assitant, Whiteaway, Laidlaw & Co.	300, Bow Bazar Street ...	ditto	
280	Collins, C	... Senior Assistant Auditor, E I R ...	E I R House ...	ditto	
281	Collins, H	... Assistant, Whiteaway, Laidlaw & Co	4, 5 & 6, Chowringhee ...	ditto	
282	Collins, H W	... Audit Inspector, E I R ...	E I R House ...	ditto	
283	Collins, H W S	... Assistant, Ralli Brothers ...	1 & 2, Church Lane ...	ditto	
**284	Collins, P A	... Clerk, Home Department ...	Home Department ...	ditto	
**285	Collins, P W	... Clerk, Foreign office ...	Esplanade, West ...	ditto	
**286	Collins, S A	... Assistant, Office of Secretary to the Government of India, Legislative Department.	Legislative Department Office, 5, Esplanade, West.	ditto	
287	Collins, W T	... Head Copper-plate Priuter, Engraving Department, Surveyor-General's Office.	13, Wood Street ...	ditto	
288	Colquhoun, J A	... Mechanical Assistant, Engineering Department, E I R.	E I R House ...	ditto	
289	Colthurst, C L E	... Accountant, Audit Department, E I R	Ditto ...	ditto	
290	Colthurst, L S	... Head Accountant, Booking Section, Audit Department, E I R.	E I R House ...	ditto	
291	Colville, G S E	... Assistant, J Thomas & Co ...	8, Mission Row ...	ditto	
292	Conway, A	... Assistant, Allen Brothers & Co ...	1, New China Bazar Street ...	ditto	
293	Conway, A P	... Assistant, Ralli Brothers ...	1 & 2, Church Lane ...	ditto	
294	Cook, H M	... Assistant, Standard Life Assurance Co.	32, Dalhousie Square ...	ditto	
295	Cooke, A B	... Assistant Accountant, Delhi & London Bank, Ld.	4, Council House Street ...	ditto	
296	Cooke, L	... Assistant, New York Life Insurance Co .	8, Old Court House Street ...	ditto	

297	Cooper, A J	Accountant, Audit Department, E I R	E I R House	...	ditto
298	Cooper, C A	Clerk, Store Department, E I R ...	Ditto	...	ditto
299	Corfield, W W	Assistant, Lovelock and Lewes ...	25, Mangoe Lane	...	ditto
300	Corneless, A E	Superintendent, Jetty Collection Department, Office of the Calcutta Port Commissioners.	Strand Road	...	ditto
301	Cornelius, K	Assistant, Reuter's Telegram Co, Ld	102, Clive Street	...	ditto
302	Cornelius, P F	Assistant, Mackintosh, Burn & Co ...	8, Esplanade, East	...	ditto
303	Corrie, T E	Assistant, King Brothers ...	102 Clive Street	...	ditto
304	Cottle, J	Partner, Morrison and Cottle ...	2, Esplanade Row, East	...	ditto
305	Coulthard, J R	Assistant, Mackenzie, Lyall & Co ...	2, Lyons Range	...	ditto
306	Counsell, E	Clerk, Office of Consulting Engineer to the Government of India for Railways.	E I R House	...	ditto
307	Counsell, Herbert James	Assistant, Bengal Secretariat, Financial Department.	Writers' Buildings	...	ditto
308	Counsell, S H	Assistant, Judicial, Political and Appointment Departments, Bengal Secretariat.	Ditto	...	ditto
309	Coutto, J A	Assistant, Office of Inspector-General of Police, L. P.	Ditto	...	ditto
310	Cowan, W D	Assistant, Jardine, Skinner & Co ...	4, Clive Row	...	ditto
311	Craddock, W M	Assistant Accountant, Dehli and London Bank, Ld.	4, Council House Street	..	ditto
312	Crass, P A	Assistant, Royal Insurance Co ...	26-27, Dalhousie Square	...	ditto
313	Crawford, Alex	Assistant, Birkmyre Brothers ...	6, Clive Row	...	ditto
314	Crawford, W	Assistant, Balmer, Lawrie & Co ...	103, Clive Street	...	ditto
315	Craymer, S B	Assistant, Ralli Brothers ...	1 & 2, Church Lane	...	ditto
316	Cregh, J R	Assistant, Bombay Company, Ld ...	7-1, Lyons Range	...	ditto
317	Creed, F C	Assistant, Government Medical Store Department, B. C.	8, Wellesley Place	...	ditto

No.	Names.	Style or Calling.	Residence or place of business.	Religion.	Remarks.
	C				
318	Creaswall, J ...	Assistant, Harman & Co ...	12, Government Place ...	Christian	
319	Crichton, A ...	Assistant Accountant, National Bank of India, Ld.	104, Clive Street ...	ditto	
320	Crimmin, C ...	Assistant, Ralli Brothers ...	1 & 2, Church Lane ...	ditto	
321	Critchley, C E B ...	Assistant Secretary to Agent, E I R	E I R House ...	ditto	
322	Cross, W A ...	Manager, W. Newman & Co ...	4, Dalhousie Square ...	ditto	
*.*323	Crosse, C H ...	Superintendent, Foreign office ...	Esplanade, West ...	ditto	
*.*324	Crow, S E ...	5th Class Clerk, Secretariat, Government of India, Public Works Department.	Imperial Secretariat Buildings	ditto	
325	Crowder, M ...	Manager, W Crowder & Co ...	12, Hare Street ...	ditto	
326	Cruden, D A C ...	Assistant, Gillanders, Arbuthnot & Co.	8, Clive Street ...	ditto	
327	Cruickshank, G ...	Assistant, C Lazarus & Co ...	60, Bentinck Street ...	ditto	
328	Cubitt, J E ...	Assistant, J Thomas & Co ...	8, Mission Row ...	ditto	
329	Culbert, P ...	Assistant, W Leslie & Co ..	2, Chowringhee ...	ditto	
330	Cumberlege, R C ...	Passing Officer, Bank of Bengal ...	Strand ...	ditto	
331	Cunliffe, A E ...	Secretary, Great Eastern Hotel Co, Ld.	1, 2 & 3, Old Court House Street.	ditto	
332	Cunningham, J A ...	Education Service, Presidency College	College Square ...	ditto	
333	Cunningham, W W ...	Assistant, Bird & Co ...	101-1, Clive Street ...	ditto	
334	Currie, F ...	School Master, Armenian College ...	Armenian College ...	ditto	
335	Currie, J H ...	Receipt Inspector, Office of the Calcutta Port Commissioners.	Strand Road ...	ditto	
336	Curtis, H ...	Assistant, Graham & Co ...	9, Clive Street ...	ditto	
337	Curtis, H ...	Shed Officer, Office of the Calcutta Port Commissioners.	Strand Road ...	ditto	
338	Curtis, Hayward T ...	Assistant, George Henderson & Co ...	100, Clive Street ...	ditto	

339	Cuthbert, D A	...	Assistant Accountant, National Bank of India, Ld.	104, Clive Street ...	ditto
340	Cuthbert, D M	...	Assistant, Mackintosh, Burn & Co ...	8, Esplanade, East ...	ditto
341	Cutler, P R	...	Assistant, Hall & Anderson ...	31, Chowringhee ...	ditto
342	Cuttriss, C A	...	Assistant, *Statesman* Office ...	3, Chowringhee ...	ditto
343	Cutts, R	...	Assistant, Francis, Harrison, Hathaway & Co.	13, Government Place, East ...	ditto
344	Cuyper, T G	...	Proprietor, T G Cuyper ...	3 & 4, Metcalfe Street ...	ditto
	D				
**345	D'Abreu, W F	...	4th Class Clerk, Secretariat, Government of India, P W Dept.	Imperial Secretariat Buildings	ditto
346	D'Costa, F	...	Assistant, Ernsthausen, Ld ...	9, Clive Row ...	ditto
347	D'Costa, W M	...	Reader, Bengal Secretariat Press ...	Writers' Buildings ...	ditto
348	D'Cruz, H A	...	Junior 4th Class Clerk, Lower Division, Office of Secretary to the Government of India, Military Department	6, Esplanade, East ...	ditto
349	D'Cruz, H E	...	License Officer, Municipal Office ...	Municipal Office ...	ditto
350	D'Cruz, J A	...	2nd Class Assistant, Office of Controller of Military Accounts, E C, Supply and Transport Branch.	3, Koila Ghât Street ...	ditto
351	D'Cruz, M	...	Clerk, Store Department, E. I. R. ...	E. I. R. House ...	ditto
352	D'Cruz, W W	...	4th grade Clerk, Office of Examiner of Ordnance Factory Accounts in India.	1, Koila Ghât Street ...	ditto
353	D'Cruze, J	...	Accountant, Bengal Central Railway	159, Bow Bazar Street ...	ditto
**354	D'Eca, B A	...	Clerk, Home Department ...	Home Department ...	ditto
355	D'Pyvah, E	...	Assistant, Litho. Printer, Surveyor-General's Office.	14, Wood Street ...	ditto
356	D'Rozario, E	...	Superintendent, Municipal Press ...	Municipal Office ...	ditto
357	D'Rozario, F A	...	Temporary Clerk, Fluctuating Establishment, Surveyor-General's Office.	13, Wood Street ...	ditto
**358	D'Rozario, V	..	Clerk, Foreign Office ...	Esplanade, West ...	ditto
359	D'Santos, A C	...	Measurer, Licensed Measurers' Department, Bengal Chamber of Commerce.	2, Clive Street ...	ditto

No.	Names.	Style or calling.	Residence or place of business.	Religion.	Remarks.
	D				
*.*360	D'Santos, L J	... Superintendent, Home Department	Home Department ...	Christian	
361	D'Silva, A	... Assistant, Office of Inspector-General of Police, L. P.	Writers' Buildings ...	ditto	
*.*362	D'Silva, F E	.... Clerk, Foreign Office ...	Esplanade, West ...	ditto	
363	D'Silva, J	... Assistant Litho. Printer, Surveyor-General's Office.	14, Wood Street ...	ditto	
364	D'Silva, J A	... Chief Clerk, Port Office ...	15-1, Strand Road ...	ditto	
365	D'Silva J S	... Head Clerk, Imperial Library, Metcalfe Hall.	Hare Street ...	ditto	
366	D'Silva, Walter	... Head Clerk, Office of Inspector of European Schools, Bengal.	12, Dalhousie Square ...	ditto	
*.*367	D'Souza, J R	... 5th Class Clerk, Secretariat, Government of India, P. W. Dept.	Imperial Secretariat Buildings	ditto	
368	DaCosta, A G	... Assistant Superintendent, Traffic Department, E I R.	E I R House ...	ditto	
*.*369	DaCosta, E H	... Assistant, Office of Secretary to the Government of India, Revenue and Agricultural Department, Revenue Branch.	Imperial Secretariat Buildings	ditto	
370	DaCosta, E W	... Assistant, South British Fire and Marine Insurance Co.	1, Lall Bazar ...	ditto	
371	Dahne, F C	... Architectural Draftsman, Engineering Department, E I R.	E I R House ...	ditto	
372	Dale, A S	... Manager, West End Watch Co ...	14, Dalhousie Square ...	ditto	
373	Dalglish, R	... Assistant, Anderson, Wright & Co ...	22, Strand ...	ditto	
374	Dalling, D	... Assistant, W. Leslie & Co ...	2, Chowringhee ...	ditto	
375	Dalton, F E	... Assistant, Public Debt Office, Bank of Bengal.	Strand ...	ditto	
376	Dame, J M	... Assistant, Graham & Co ...	9, Clive Street ...	ditto	
377	Damiano, N	... Assistant, Ralli Brothers ...	1 & 2, Church Lane ...	ditto	
378	Daniel, A	... Receipt Inspector, Office of the Calcutta Port Commissioners.	Strand Road ...	ditto	
379	Daniel, J E	... Assistant, Partridge & Co ...	22, Chowringhee ...	ditto	
380	Daniel, W P	... Assistant, Meugens, King and Simson	102, Clive Street ...	ditto	

381	Danks, E A	...	Assistant, King, Hamilton & Co	...	7, Hare Street	...	ditto
382	Danks, H A	...	Ditto ditto	...	ditto	...	ditto
383	Darby, G S	...	Assistant Engineer, Office of the Calcutta Port Commissioners.		Strand Road	...	ditto
384	Daubeny, A C	...	Assistant, Halford, Smith & Co.	...	1, Mission Row	...	ditto
385	Davey, G F	...	Assistant, Army and Navy Co-operative Society, Ld.		41, Chowringhee	...	ditto
386	Davidson, H	...	Assistant, H. Clark & Co	...	5, Old Court House Street	...	ditto
387	Davidson, O E	...	Assistant, R S Hart Brothers	...	157, Dhurrumtollah Street	...	ditto
388	Davie, Alexander	...	Assistant, Mackenzie, Lyall & Co	...	2, Lyons Range	...	ditto
389	Davies, T C	...	Assistant, Francis, Harrison, Hathaway & Co.		13, Government Place, East	...	ditto
390	Davies, W	...	Assistant, Mackintosh, Burn & Co	...	8, Esplanade, East	...	ditto
391	Davies, W E	...	Accountant, Cutler, Palmer & Co	...	1, Hastings Street	...	ditto
*,*392	Davis, C	...	Accountant, Accountant-General's Office, Public Works Department.		Imperial Secretariat Buildings		ditto
393	Davis, C H	...	Assistant, Army and Navy Co-operative Society, Ld.		41, Chowringhee	...	ditto
394	Dawes, S H'O	...	Assistant, W Leslie & Co	...	2, Chowringhee	...	ditto
395	Dawson, J W	...	Assistant Accountant, National Bank of India, Ld.		104, Clive Street	...	ditto
396	Day, C H	...	Assistant, G F Kellner & Co	...	32, Chowringhee	...	ditto
397	Day, F H	...	Assistant, Octavius Steel & Co	...	14, Old Court House Street	...	ditto
*,*398	Day, R A	...	Clerk, Office of Accountant-General, Public Works Department.		Imperial Secretariat Buildings		ditto
399	Deacon, H C	...	Assistant, Hall & Anderson	...	31, Chowringhee	...	ditto
400	Deas, D	...	Assistant Litho. Printer, Surveyor-General's Office.		14, Wood Street	...	ditto
*,*401	Debenham, W C	...	6th Class Senior Clerk, Upper Division, Office of Secretary to the Government of India, Military Department.		6, Esplanade, East	...	ditto
402	DeBrotton, L	...	Assistant, Becker, Gray & Co	...	7, Hastings Street	...	ditto
403	Deefholts, J E	...	Pipe-layer, District Engineer's Office, District No. III, Municipal Office.		10, Sudder Street	...	ditto

No.	Names.	Style or Calling.	Residence or place of business.	Religion.	Remarks
	D				
404	Deeks, W G	... Assistant, Cooke and Kelvey ...	20, Old Court House Street ...	Christian	
*.*405	DeMello, H R	... 1st Class Clerk, Accountant-General's Office, Military Department.	6, Esplanade, East ...	ditto	
406	Demitriadi, C C	... Assistant, Ralli Brothers ...	1 & 2, Church Lane ...	ditto	
407	Demitriadi, S C	... Ditto ...	Ditto ...	ditto	
408	Denton, P N	... Assistant, Hamilton & Co ...	8, Old Court House Street ...	ditto	
409	DeSanges, A	... Head Assistant, H. M's. Department, Office of the Calcutta Port Commissioners.	Strand Road ...	ditto	
410	Desbrulais, C E	... Superintendent, Comptroller-General's Office.	The Treasury ...	ditto	
411	DeSouza, A	... Clerk, Comptroller-General's Office ...	The Treasury ...	ditto	
412	Dess, W St J	... Assistant, Harold & Co ...	3, Dalhousie Square ...	ditto	
413	DeSt Croix, H	... Assistant, Dykes & Co ...	29, Waterloo Street ...	ditto	
414	Deveria, H A	... Assistant, Mitchell, Bardsley & Co ...	5, Clive Ghat Street ...	ditto	
415	Deverine, H G	... Measurer, Licensed Measurers' Department, Bengal Chamber of Commerce.	2, Clive Street ...	ditto	
*.*416	Devine, F	... Clerk, Home Department ...	Home Department ...	ditto	
417	Dewing, F G	... Assistant, Lyall, Marshall & Co ...	25, Mangoe Lane ...	ditto	
418	Dias, A M	... Measurer, Licensed Measurers' Department, Bengal Chamber of Commerce.	2, Clive Street ...	ditto	
419	Dias, E	... Assistant, Bengal Secretariat, Public Works Department.	Writers' Buildings ...	ditto	
420	Dias, P J	... Assistant to the Officer in charge of Records of the Government of India.	Government Place, West ...	ditto	
421	Dick, H W	... Assistant Accountant, National Bank of India, Ld.	104, Clive Street ...	ditto	
422	Dickinson, H W	... Assistant, Finlay, Muir & Co ...	1, Clive Street ...	ditto	
423	Dickson, R	... Assistant, Gladstone, Wyllie & Co	101, Clive Street ...	ditto	

424	*Diggory, S L*	.. Assistant, Balmer, Lawrie & Co ...	103, Clive Street ...	ditto
425	Dighton, J L	... Head Assistant, His Majesty's Assay Office.	47-1, Strand ...	ditto
**426	Dinwiddie, A	... 5th Class Clerk, Secretariat, Government of India, Public Works Department.	Imperial Secretariat Buildings	ditto
427	Dissent, A	... Professor, Doveton College ...	41, Free School Street ...	ditto
428	Dixon, P S	... Assistant, W Leslie & Co ...	2, Chowringhee ...	ditto
**429	Dobson, S H	... Clerk, Accountant-General's Office, Public Works Department.	Imperial Secretariat Buildings	ditto
430	Dods, W K	... Accountant, Hongkong and Shanghai Banking Corporation.	31, Dalhousie Square ...	ditto
**431	Dodsworth, P T L	... Clerk, Foreign Office ...	Esplanade, West ...	ditto
**432	Dollman, W G	... ditto ...	ditto ...	ditto
433	Donovan, W	... Manager, Oriental Telephone and Electric Co, Ld.	7, Pollock Street ...	ditto
434	Doran, H F	... Assistant, Mackinnon, Mackenzie & Co.	16, Strand ...	ditto
435	Doris, E	... Record-keeper, Agent's Office, E I R	E I R House ...	ditto
436	Dover, A H	... Measurer, Licensed Measurers' Department, Bengal Chamber of Commerce.	2, Clive Street ...	ditto
437	Dover, E W	... Assistant Controller of Military Accounts, E C.	3, Koila Ghat Street ...	ditto
438	Dover, J C	... Assistant, Martin & Co ...	Jackson House ...	ditto
439	Dover, O C	... Assistant, Traill & Co ...	20, British Indian Street ...	ditto
44[illegible]	Dover, P J	... Measurer, Licensed Measurers' Department, Bengal Chamber of Commerce.	2, Clive Street ...	ditto
**441	Dover, R W	... Deputy Examiner, 2nd grade, Office of Accountant-General, Military Department.	6, Esplanade Row, East ...	ditto
442	Dovetil, C N	... Assistant, Bird & Co ...	101-1, Clive Street ...	ditto
**443	Dowling, E	... Draftsman, 1st class, Office of Secretary to the Government of India, Public Works Department.	Imperial Secretariat Buildings	ditto

No.	Names.	Style or Calling.	Residence or place of business.	Religion.	Remarks.
	D				
444	Downes, E	... Assistant, Army and Navy Co-operative Society, Ld.	41, Chowringhee ...	Christian	
445	Downing, J T	... Incorporated Accountant, A. P. Stockwell & Co.	14-2, Sudder Street ...	ditto	
446	Doxey, F	... Assistant, Barlow & Co ..	37, Strand Road ...	ditto	
447	Doyle, J F	... Assistant, W Newman & Co ...	4, Dalhousie Square ...	ditto	
448	Dozey, C E	... Chief Clerk, Shipping Office ...	15-1, Strand Road ...	ditto	
449	Dozey, E C	... Head Assistant, Office of the Agent for Government Consignments.	5, Strand Road ...	ditto	
450	Dozey, E C	... Superintendent, Accountant-General's Office, Bengal.	The Treasury ...	ditto	
**451	Dracup, R H	... 2nd Class Clerk, Secretariat, Government of India, Public Works Department.	Imperial Secretariat Buildings	ditto	
452	Ducat, F G W	... Assistant, Mackinnon, Mackenzie & Co	16, Strand ...	ditto	
453	Ducat, W F	... Assistant, Gillanders, Arbuthnot & Co	8, Clive Street ..	ditto	
**454	DuCroix, C J	... Superintendent, Home Department ..	Home Department ...	ditto	
455	Dudrence, W A	... Assistant, Office of Inspector-General of Civil Hospitals and Sanitary Commissioner for Bengal.	Writers' Buildings ...	ditto	
456	Duff, A	... Assistant, Macneill & Co ...	2, Clive Ghat Street ...	ditto	
457	Duff, D S	... Assistant, F & C Osler ...	12, Old Court House Street ...	ditto	
458	Duff, P W	... Assistant, W Newman & Co ...	4, Dalhousie Square ...	ditto	
459	Duff, W D	... Assistant, Mackinnon, Mackenzie & Co	16, Strand ...	ditto	
**460	Duggan, A	... 1st Class Clerk, Secretariat, Government of India, Public Works Department.	Imperial Secretariat Buildings	ditto	
461	Duggan, C A R	... Assistant, Shaw, Wallace & Co ...	20, Strand Road ...	ditto	
462	Duke, A	... Shed Officer, Office of the Calcutta Port Commissioners.	Strand Road ...	ditto	
463	Duloken, A D	... Assistant, Ralli Brothers ...	1 & 2, Church Lane ...	ditto	
464	Dunbar, R E	... Chief Reporter, *Englishman* ...	9, Hare Street ...	ditto	
465	Duncan, J A	... Assistant, Phelps & Co ...	15, Old Court House Street ...	ditto	

466	Duncan, M	...	Assistant Manager, Stewart, Mackenzie & Co.	1, Garstin's Place	...	ditto
467	Duncan, R D	...	Assistant, Graham & Co ...	9, Clive Street	...	ditto
468	Duncan, R N	...	Assistant, Andrew Yule & Co ...	7, Clive Row	...	ditto
469	Duncan, T C	...	Assistant, F C Pallachi & Co ...	2, Garstin's Place	...	ditto
470	Duncan, W N	...	Manager, Stewart, Mackenzie & Co ...	1, Garstin's Place	...	ditto
471	Dundas, H	...	Assistant, Standard Oil Company of New York.	8, Dalhousie Square, East	...	ditto
472	Dunlop, C D H	...	Assistant, Turner, Morrison & Co ...	6, Lyons Range	...	ditto
473	Dunn, J J	...	Head Assistant, Secretary's Department Office of the Calcutta Port Commissioners.	Strand Road	...	ditto
474	Dunstall, C G	...	Partner, Lemon, Blake & Co ...	3-1, Wellesley Place	...	ditto
475	Durham, H A	...	Assistant, Begg, Dunlop & Co ...	12, Mission Row	...	ditto
476	Durrant, W J	...	Assistant, Office of Private Secretary to the Viceroy.	Government House	...	ditto
477	Duru, A E	...	Measurer, Licensed Measurers' Department, Bengal Chamber of Commerce.	2, Clive Street	...	ditto
478	Dutton, S T	...	Signal Engineer, E I R ...	E I R House	...	ditto
479	Dyer, R W	...	Assistant, Whiteaway, Laidlaw & Co	300, Bow Bazar Street	...	ditto
480	Dyer, W	...	Officiating Claims Clerk, Traffic Manager's Office, E I R.	E I R House	...	ditto
481	Dyer, W J	...	Assistant, Sun Life Office ...	7, Council House Street	...	ditto
	E					
482	Eagleton, A W	...	Deputy Inspector of Excise, Calcutta Collectorate.	3, Charnock Place	...	ditto
483	Earle, E	...	Engraver, Engraving Department, Surveyor-General's Office.	13, Wood Street	...	ditto
484	Earle, E J	...	Accountant, Office of Pay Examiner, Military Accounts Department, E C.	3, Koila Ghat Street	...	ditto
485	Earle, S A	...	Junior 4th Class Clerk, Lower Division, Office of Secretary to the Government of India, Military Department.	6, Esplanade, East	...	ditto
486	Eastment, E J	...	Junior 4th Class Clerk, Lower Division, Office of Secretary to the Government of India, Military Department.	Ditto	...	ditto

No.	Name.	Style or Calling.	Residence or place of business.	Religion.	Remarks.
	E				
487	Easton, R S	... Assistant, Jessop & Co, Ld	... 93, Clive Street	... Christian	
488	Eatwell, G	... Assistant, Thacker, Spink & Co	... 5, Government Place	... ditto	
489	Eddis, B E G	... Assistant, Gillanders. Arbuthnot & Co	8, Clive Street	... ditto	
490	Edelston, T D	... Assistant, Allen Brothers & Co	... 1, New China Bazar Street	... ditto	
491	Eden, J R	... Assistant, Mackintosh, Burn & Co	... 8, Esplanade, East	... ditto	
492	Edmondson, H C	... Assistant, Turner, Morrison & Co	... 6, Lyons Range	... ditto	
*,*493	Edmondson, J W	... Clerk, Foreign Office	... Esplanade, West	... ditto	
494	Edmondston, C B	... Sub-Accountant, Chartered Bank of India, Australia, and China.	5, Council House Street	... ditto	
495	Edmondstone, J W	... Manager, Eastern Landing, Clearing and Forwarding Co.	7, Dalhousie Square	... ditto	
*,*496	Edwards, C	... Assistant, Bengal Secretariat, General and Revenue Departments.	Writers' Buildings	... ditto	
497	Edwards, E	... Partner, Francis, Harrison, Hathaway & Co.	13, Government Place	... ditto	
498	Edwards, G T	... Assistant, Cooke & Kelvey	... 20, Old Court House Street	... ditto	
499	Edwards, H J	... Assistant, McLeod & Co	... 31, Dalhousie Square	... ditto	
500	Edwards, L	... Assistant, Graham & Co	... 9, Clive Street .	... ditto	
*,*501	Edwards, S	... Assistant, Government of India, Statistical Department.	7, Koila Ghat Street	... ditto	
*,*502	Eede, J E	... Clerk, Home Department	... Home Department	... ditto	
503	Egerton, W M	... Assistant, Gillanders, Arbuthnot & Co	8, Clive Street	... ditto	
504	Eldert, N L	... Assistant, W Leslie & Co	... 2, Chowringhee	... ditto	
505	Elliott, W T T	... Assistant, Macneill & Co	... 2, Clive Ghat Street	... ditto	
506	Ellis, E E	... Rate Clerk, Traffic Manager's Office, E I R.	E I R House	... ditto	
507	Ellis, J H	... Teacher, La Martinière College	... 11, Loudon Street	... ditto	
508	Ellis, W J	... Partner, Don, Watson & Co	... 5, Commercial Buildings	... ditto	
509	Emerson, E C	... Partner, Francis, Harrison, Hathaway & Co.	13, Government Place, East	... ditto	
510	Emin, J	... Assistant, Bird & Co	... 101-1, Clive Street	... ditto	
*,*511	Emmer, F A	... Clerk, Foreign Office	... Esplanade, West	... ditto	

512	Engel, Charles	...	Assistant Superintendent, Office of the Calcutta Port Commissioners.	Strand Road ...	ditto
513	Esaw, G J	...	Officiating Personal Assistant, Office of Protector of Emigrants and Superintendent of Emigration.	55, Clowringhee Road ...	ditto
514	Eustace, S	...	Chief Engineer, Calcutta Electric Supply Corporation, Ld.	4, Fairlie Place ...	ditto
515	Evans, H F	...	Assistant, Whiteaway, Laidlaw & Co	4, 5 and 6, Chowringhee ...	ditto
516	Evans, W	...	Assistant, W Leslie & Co ...	2, Chowringhee ...	ditto
517	Evennette, C T	...	District Engineer, District No. III, Municipal Office.	10, Sudder Street ...	ditto
518	Evers, T G	...	Assistant, Shaw, Wallace & Co ...	20, Strand Road ...	ditto
519	Ewart, G	...	Assistant, T E Thomson & Co, Ld...	9, Esplanade, East ...	ditto
520	Ewing, A	...	Measurer, Licensed Measurers' Department, Bengal Chamber of Commerce.	2, Clive Street ...	ditto
521	Ewing, A	...	Extra Assistant Superintendent, Drawing Department, Surveyor-General's Office.	13, Wood Street ...	ditto
522	Ewing, E D	...	Accountant, 3rd grade, Office of Accountant-General, Military Department.	6, Esplanade Row, East .	ditto
	F				
523	Fabian, W P	...	Pipelayer, Municipal Office ... Water Works Department.	15, Munshi Wooly Wala's Lane.	ditto
*.*524	Fairley, J W	...	Clerk, Foreign Office ...	Esplanade, West ...	ditto
525	Fairweather, S A	...	Assistant, Kilburn & Co ..	4, Fairlie Place ...	ditto
526	Fall, H W	...	Assistant, Hall and Anderson ...	31, Chowringhee ...	ditto
527	Farquhar, A	...	Partner, Manton & Co ...	13, Old Court House Street ...	ditto
528	Farrel, J S	...	Head Assistant, Chief Engineer's Office.	4, Corporation Street ...	ditto
529	Fegredo, J A	...	4th grade Clerk, Office of Controller of Military Accounts, E C.	3, Koila Ghat Street ...	ditto

No.	Names.	Style or Calling.	Residence or place of business.	Religion.	Remarks.
	F				
**530	Fegredo, J S	... Clerk, Office of Accountant-General, Public Works Department.	Imperial Secretariat Buildings	Christian	
531	Fell, E L	... Deputy Superintendent, Government of India, Statistical Department.	7, Koila Ghat Street ...	ditto	
**532	Fellinger, J W	... Accountant, Accountant-General's Office, Public Works Department.	Imperial Secretariat Buildings	ditto	
533	Fenn, J P	... Assistant Auditor, E I R ...	E I R House ...	ditto	
534	Ferguson, J W	... Assistant, J C Duffus & Co ...	10, Clive Row ...	ditto	
535	Fermie, A A	... District Health Officer, District No III, Municipal Office.	7, Sudder Street ...	ditto	
536	Fermie, J A	... Junior 1st Class Clerk, Lower Division, Office of Secretary to the Government of India, Military Department.	6, Esplanade, East ...	ditto	
537	Fernandes, E F	... Assistant, A I Mantacheff & Co ...	12, Dalhousie Square ...	ditto	
538	Ferrier, T A	... Assistant Mathematical Instrument Maker, Surveyor-General's Office.	15, Wood Street ...	ditto	
539	Ferris, W	... Member, Dykes & Co ...	29, Waterloo Street ...	ditto	
540	Ferron, J E	. Clerk, Royal Insurance Co ...	26-27, Dalhousie Square ...	ditto	
**541	Fink, K	... Clerk, Foreign Office ...	Esplanade, West ...	ditto	
542	Fink, W H M	... Assistant, Office of Secretary to the Government of India, Revenue and Agricultural Department, Patents Branch.	Imperial Secretariat Buildings	ditto	
543	Finlayson, D	... Care-taker, Bank of Bengal ...	Strand ...	ditto	
544	FitzWilliam, J J	... Assistant Master, Calcutta Free School	58, Free School Street ...	ditto	
545	Flanagan, C D	... Assistant, A J Bolton & Co ...	32, Jackson's Ghat Street ...	ditto	
546	Fleming, A	... Assistant, Mackinnon, Mackenzie & Co.	16, Strand ...	ditto	
547	Fleming, C	... Assistant, Jessop & Co, Ld ...	93, Clive Street ...	ditto	
**548	Fleming, H J S	... 7th Class Clerk, Secretariat, Government of India, Public Works Department.	Imperial Secretariat Buildings	ditto	

549	Fleming, S J	...	Partner, J Fleming & Co ...	173, Dhurrumtollah Street	...	ditto
550	Fogarty, R	...	Head Assistant, Litho Branch, Surveyor-General's Office.	14, Wood Street	...	ditto
551	Force, A	...	Assistant, H Clark & Co ...	5, Old Court House Street	...	ditto
552	Ford, J	...	Assistant, J Thomas & Co ...	8, Mission Row		ditto
553	Ford, W H Rogers	..	Assistant, Lovelock & Lewes ...	25, Mangoe Lane	...	ditto
554	Foster, C W	...	Head Clerk, Vehicle Movement Branch, Traffic Department, E I R.	E I R House	...	ditto
*555	Fox, C	...	Clerk, Foreign Office ...	Esplanade, West	...	ditto
556	Fox, H W	...	Assistant, Turner, Morrison & Co ...	6, Lyons Range	...	ditto
557	Fox, J H M	...	Assistant, Andrew Yule & Co ...	7, Clive Row	...	ditto
558	Fox, M H	..	Assistant Superintendent, Office of the Calcutta Port Commissioners.	Strand Road	...	ditto
559	Fox, S B	...	Assistant, Jessop & Co, Ld ...	93, Clive Street	...	ditto
560	Francis, A	...	Assistant Litho Printer, Surveyor-General's Office	14, Wood Street	...	ditto
561	Francis, A R	...	Assistant, Francis, Harrison, Hathaway & Co	13, Government Place, East	...	ditto
562	Francis, S S	...	Superintendent. Pig Slaughter House, District No. III, Municipal Office.	Municipal Office	...	ditto
563	Francis, W	...	Assistant, Ranken & Co ...	4, Old Court House Street	...	ditto
564	Fraser, H	...	Assistant, Jardine, Skinner & Co ...	4, Clive Row	...	ditto
565	Fraser, J E	...	Examiner, Office of Superintendent, Government Printing, India	8, Hastings Street	...	ditto
*566	Freitas, H St Clair	...	Shorthand-Writer, Home Department.	Home Department	...	ditto
567	French, H H	...	Superintendent, Office of Secretary to the Government of India, Revenue and Agricultural Department.	Imperial Secretariat Buildings		ditto
568	French, H L	...	Superintendent, Office of Secretary to the Government of India, Finance and Commerce Department.	Treasury Buildings	...	ditto
569	Frood, A D	...	Assistant, Ashworth, Taylor & Co ...	134, Canning Street	...	ditto
*570	Frost J H	...	Clerk, Home Department ...	Home Department	...	ditto

No.	Names	Style or Calling.	Residence or place of business.	Religion.	Remarks.
	F				
571	Fullam, E M	... Assistant Examiner, Office of Pay Examiner, Military Accounts Department, E C.	3, Koila Ghat Street ...	Christian	
572	Fuller, R	... Traveller, Lemon, Blake & Co ...	3-1, Wellesley Place ...	ditto	
573	Futcher, S B W	... Assistant, Depositors' Department, Bank of Bengal.	Strand ...	ditto	
574	Fyfe, J H	... Assistant, Mackinnon, Mackenzie & Co	16, Strand ...	ditto	
575	Fyfe, W R D	... Assistant, Mackenzie, Lyall & Co ...	2, Lyons Range ...	ditto	
	G				
576	Gantzer, H	... Superintendent, Tea Warehouse and P T Railway, Office of the Calcutta Port Commissioners.	Strand Road ...	ditto	
*577	Gantzer, N H	... Assistant, Office of Secretary to the Government of India, Finance and Commerce Department.	Treasury Buildings ...	ditto	
578	Gardner, C W	... Assistant, Harman & Co ...	12, Government Place ...	ditto	
579	Gareh, E A	... Assistant, M. E. Gubbay ...	3, Fairlie Place ...	Jew	
580	Garratt, S	... Superintendent, Caxton Steam Printing Works.	1-2, Mission Row ...	Christian	
581	Garrett, H	... Assistant Manager, James Simpson & Co, Ld.	32-1, Dalhousie Square ...	ditto	
582	Garrick, H B D	... Artist, Office of Geological Survey of India.	Museum ...	ditto	
583	Garvin, H F	... Inspector, Collector's Department ...	Municipal Office ...	ditto	
584	Gasper, E H S	... Assistant, Bengal Secretariat, Public Works Department.	Writers' Buildings ...	ditto	
585	Gasper, E S	... Assistant, John Dickinson & Co, Ld	7, New China Bazar Street ...	ditto	
586	Gasper, W S	... Engineer, Office of Superintendent, Government Printing, India.	166, Dhurrmtollah Street ...	ditto	
587	Gass, C P	... Assistant, G F Kellner & Co ...	32, Chowringhee ...	ditto	
588	Gastand, M	... Extra Assistant Superintendent, Surveyor-General's Office, Drawing Department.	13, Wood Street ...	ditto	

589	Gates, F	...	Assistant, Francis, Harrison, Hathaway & Co.	13, Government Place, East ...	ditto
590	George, C R	...	Assessor of Income-tax ...	3, Charnock Place ...	ditto
591	George, D	...	Deputy License Officer (Carts) ...	Municipal Office ...	ditto
592	George, F	...	Accountant, Audit Department, E I R	E I R House ...	ditto
593	George, J R	...	Assistant, Ralli Brothers ...	1 and 2, Church Lane ...	ditto
594	George, R G	...	Assistant, George Henderson & Co	100, Clive Street ...	ditto
595	Gethen, S C	...	Superintendent of I V Wharves, Office of the Calcutta Port Commissioners.	Strand Road ...	ditto
596	Giannacopulo, C A	...	Assistant, Gladstone, Wyllie & Co ...	101, Clive Street ...	ditto
597	Gilbert, J A	...	Assistant Accountant, Bank of Bengal	Strand ...	ditto
598	Giles, J G	...	Assistant, Mackintosh, Burn & Co ...	8, Esplanade, East ...	ditto
**599	Gill, A B	...	Jr 1st class Clerk, Lower Division, Office of Secretary to the Government of India, Military Department.	6, Esplanade, East ...	ditto
600	Gill, J W	...	Assistant, Atkinson Brothers, Ld ...	13, Chowringhee ...	ditto
**601	Gill, R E	.	4th class Clerk, Secretariat, Government of India, Public Works Department.	Imperial Secretariat Buildings	ditto
602	Gillespie, G	...	Assistant, Hoare, Miller & Co ...	38, Strand ...	ditto
603	Girling, R	...	Assistant, Whiteaway, Laidlaw & Co	4, 5, & 6, Chowringhee ...	ditto
604	Gleeson, W C	...	Assistant, Finance and Commerce Department.	Treasury Buildings ...	ditto
605	Glen, W C	...	Assistant, Thacker, Spink & Co ...	5, Government Place ...	ditto
606	Glover, T B	...	Assistant, Balmer, Lawrie & Co ...	103, Clive Street ...	ditto
607	Glover, W M	...	Assistant, Burn & Co ...	7, Hastings Street ...	ditto
608	Goddard, G W	...	Partner, James Monteith & Co ...	21, Old Court House Street ...	ditto
609	Godfrey, C T	...	Assistant, J A Dykes & Co ...	102, Clive Street ...	ditto

No.	Names.	Style or Calling.	Residence or place of business.	Religion.	Remarks
	G				
610	Godfrey, G C	... Assistant, W Newman & Co ...	4, Dalhousie Square ...	Christian	
611	Godwin, R H	... Assistant, George Henderson & Co	100, Clive Street ...	ditto	
612	Gold, G E	... Assistant, Manton & Co ...	13, Old Court House Street ...	ditto	
613	Gomes, N	... 3rd class Assistant, Office of Controller of Military Accounts, E C, Supply and Transport Branch	3, Koila Ghât Street ...	ditto	
614	Gomes, T	... Assistant, Graham & Co ...	9, Clive Street ...	ditto	
615	Gomes, T H	... Assistant, Kilburn & Co ...	4, Fairlie Place ...	ditto	
616	Gomes, W E	... Assistant, Shrager Brothers ...	28, Dalhousie Square ...	ditto	
617	Gomes, W R	... Assistant, Government Medical Store Department, Bengal Command.	8, Wellesley Place ...	ditto	
618	Gomes, G F H	... Assistant, South British Fire and Marine Insurance Co.	1, Lall Bazar ...	ditto	
619	Gonsalves, C	... Assistant, Nash and Andrew ...	14, Government Place ...	ditto	
620	Gonsalves, H	... Receipt Inspector, Office of the Calcutta Port Commissioners.	Strand Road ...	ditto	
621	Gonsalves, N J	... Assistant Litho Printer, Surveyor-General's Office.	14, Wood Street ...	ditto	
*622	Goodall, F E	... 6th class Clerk, Secretariat, Government of India, P W D	Imperial Secretariat Buildings	ditto	
623	Goodall, P	... Assistant, J Monteith & Co ...	21, Old Court House Street ...	ditto	
624	Goodman, J	... Assistant, Anderson, Wright & Co ...	22, Strand ...	ditto	
625	Goodwin, A E	... Accountant, Martin & Co ...	Jackson House ...	ditto	
626	Goodwin, R N	... Manager, *Englishman* office ...	9, Hare Street ...	ditto	
627	Gordon, A D	... Assistant, Williamson, Magor & Co ...	4, Mangoe Lane ...	ditto	
628	Gordon, C E	... Assistant, Shaw, Wallace & Co ...	20, Strand Road ...	ditto	
629	Goss, C H A	... Assistant, Gillanders, Arbuthnot & Co	8, Clive Street ...	ditto	
630	Gould, Franks	... Assistant, Graham & Co ...	9, Clive Street ...	ditto	

631	Govan, P D	...	Assistant, Cook & Co	...	182, Dhurrumtollah Street	...	ditto
632	Govan, W	...	Assistant, Kilburn & Co	...	4, Fairlie Place	...	ditto
633	Graham, C A	...	Assistant, Grindlay & Co	...	11, Hastings Street	...	ditto
634	Graham, R	...	Assistant, Finlay, Muir & Co	...	1, Clive Street	...	ditto
635	Grahame, W H H	...	Assistant Accountant, National Bank of India, Ld.		104, Clive Street	...	ditto
*.*636	Grant, J	...	Clerk, Foreign Office	...	Esplanade, West	...	ditto
637	Grant, J R	...	Supervisor of Jetties, Office of the Calcutta Port Commissioners.		Strand Road	...	ditto
638	Gray, A	...	Assistant, Mackintosh Burn & Co	...	8, Esplanade, East	...	ditto
639	Gray, C O	...	Head Assistant, Surveyor-General's Office, Correspondence Branch.		13, Wood Street	...	ditto
640	Gray, J C C	...	Accountant, Office of Controller of Military Accounts, E C, Accounts Branch.		Military Accounts Department, 3, Koila Ghât Street.		ditto
641	Green, C L	...	Draftsman, Surveyor-General's Office, Drawing Department.		13, Wood Street	...	ditto
642	Green, C V	...	Assistant Accountant, Alliance Bank of Simla, Ld.		8, Council House Street	...	ditto
643	Green, H H	...	Engraver, Engraving Department, Surveyor-General's Office.		13, Wood Street	...	ditto
*.*644	Green, J H	...	Clerk, Foreign Office	...	Esplanade, West	...	ditto
645	Greene, F W	...	Assistant, Graham & Co	...	9, Clive Street	...	ditto
646	Greenhill, F F	...	Assistant, Cook & Co	...	182 & 183, Dhurrumtollah Street.		ditto
*.*647	Greenway, F C	...	Assistant, Bengal Secretariat, Judicial, Political and Appointment Departments.		Writers' Buildings	...	ditto
648	Gregory, J F	...	Assistant, Ernsthausen, Ld	...	9, Clive Row	...	ditto
*.*649	Gregory, T	...	3rd class Clerk, Secretariat, Government of India, Public Works Department.		Imperial Secretariat Buildings		ditto
650	Gregson, S	...	Assistant, Bengal Chamber of Commerce.		2, Clive Street	...	ditto

No.	Names.	Style or Calling.	Residence or place of business.	Religion.	Remarks.
	G				
651	Greig, J F	... Assistant, W Leslie & Co	... 2, Chowringhee	...	Christian
652	Greig, W H	... Assistant, Finlay, Muir & Co	... 1, Clive Street	...	ditto
653	Grenon, E	... Assistant, Moran & Co	... 3, Mangoe Lane	...	ditto
654	Gresham, C	... Assistant, W Leslie & Co	... 2, Chowringhee	...	ditto
655	Griffith, R R	... Assistant, Lovelock & Lewes	... 25, Mangoe Lane	...	ditto
656	Grimaldi, N	... Assistant, Petrocochino Brothers	... 4, Clive Ghât Street	...	ditto
657	Grimson, G R	... Clerk, Office of Pay Examiner, Mili- Accounts Department, E C.	3, Koila Ghât Street	...	ditto
*658	Grose, C H	... Assistant, Office of Secretary to the Government of Bengal, Public Works Department.	Writers' Buildings	...	ditto
659	Grossmann, J	... Assistant, J Thomas & Co	... 8, Mission Row	...	ditto
660	Groves, H R M	... Assistant, New York Life Insurance Co	8, Old Court House Street	...	ditto
661	Gubbay, A J	... Assistant, H D Cartwright & Co	... 13, Clive Street	...	Jew
662	Gubboy, J A	... Assistant, Graham & Co	... 9, Clive Street	...	ditto
663	Guest, C W W	... Accountant, Office of Government Examiner of Railway Accounts, Public Works Department.	E I R House	...	Christian
664	Guinness, A R	... Boiler Inspector, Office of the Commissioners for the Inspection of Steam-boilers.	309, Bow Bazar Street	...	ditto
665	Gurney, R M	... Assistant, Martin & Co	... Jackson House	...	ditto
666	Guzman, E	... Examiner, Government Printing Office, India.	8, Hastings Street	...	ditto

H

667	Hailes, A H	...	Assistant, Francis, Harrison, Hathaway & Co.	13, Government Place, East	ditto
668	Hale, E Seymour	...	Secretary, Calcutta School Book Society.	1, Wellington Square ...	ditto
669	Hales, H W	...	Assistant, Meugens, King and Simson.	102, Clive Street ...	ditto
670	Halfhide, R H	...	Assistant, Bengal Secretariat, Public Works Department.	Writers' Buildings ...	ditto
671	Hall, A L	...	Assistant, Turner, Morrison & Co ...	6, Lyons Range ...	ditto
672	Hall, F J	...	Deputy Superintendent, Office of Superintendent, Government Printing, India.	8, Hastings Street ...	ditto
673	Hall, P	...	Assistant, Marshall Sons & Co, Ld ...	99, Clive Street ...	ditto
674	Hall, P N	...	Partner, Hall & Anderson ...	31, Chowringhee ...	ditto
675	Hall, T W	...	Partner, Kinmond & Co ...	5, Garstin's Place ...	ditto
676	Halloran, W M	...	Sub-Engineer, Office of the Executive Engineer, 2nd Calcutta Division.	Writers' Buildings ...	ditto
677	Halpern, E J	...	Assistant, Stein Forbes & Co, Ld ...	12, Dalhousie Square ...	ditto
678	Hamilton, D McK (Jr)	...	Assistant, Mackinnon, Mackenzie & Co	16, Strand ...	ditto
679	Hamilton, G	...	Accountant, Office of Examiner of Ordnance Factory Accounts in India.	1, Koila Ghât Street ...	ditto
680	Hamilton, N	...	Assistant, Lovelock and Lewes ...	25, Mangoe Lane ...	ditto
681	Hampson, J	...	Assistant, Graham & Co ...	9, Clive Street ...	ditto
682	Hanby, H H B	...	Extra Assistant Superintendent, Surveyor-General's Office, Drawing Department.	13, Wood Street ...	ditto
683	Hannah, Captain A S	...	Manager, W H Harton & Co ...	30, Strand Road ...	ditto
684	Hannah, G S	...	Partner, W Haworth & Co ...	1, Mission Row ...	ditto
685	Hannay, W G	...	Assistant Shipping Master, Shipping Office.	15-1, Strand Road ...	ditto
686	Hanning, J C	...	Assistant Accountant, National Bank of India, Ld.	104, Clive Street ...	ditto

No.	Names.	Style or Calling.	Residence or place of business.	Religion.	Remarks.
	H				
687	Hardless, T	... Assistant, Begg, Dunlop & Co ...	12, Mission Row ...	Christian	
688	Hardy, J R	... Assistant, Marshall Sons & Co, Ld....	99, Clive Street ...	ditto	
689	Hardy, S	... Assistant, Government Medical Store Department, B C.	8, Wellesley Place ...	ditto	
690	Harland, G	... Manager, Cosmopolitan Hotel ...	39, Bentinck Street ...	ditto	
691	Harley, R E D L	... Partner, F Harley & Co ...	10, Lall Bazar Street ...	ditto	
692	Harnack, G H	... Assistant, Harnack & Co ...	10 & 10-1, Old Court House Street.	ditto	
693	Harper, G	... Assistant, Francis, Harrison, Hathaway & Co.	13, Government Place, East ...	ditto	
694	Harrington, F	... Assistant, Walter Locke & Co, Ld ...	4, Esplanade ...	ditto	
695	Harrington, T	... Inspector, Licensed Measurers' Department, Bengal Chamber of Commerce.	2, Clive Street ...	ditto	
696	Harrison, F H	... Assistant, Manton & Co ...	13, Old Court House Street ...	ditto	
697	Hart, G L	... Deputy Accountant, Calcutta Mint ...	Strand Road, North ...	ditto	
698	Hart, T C	... Assistant, Burk Brothers ...	5 & 4, Peter's Lane ...	ditto	
699	Harvey, C	... Assistant, Army and Navy Co-operative Society, Ld.	41, Chowringhee ...	ditto	
*700	Harvey, C H L	... 7th class Clerk, Secretariat, Government of India, P. W. D.	Imperial Secretariat Buildings	ditto	
701	Harvey, G	... Assistant, Bombay Company, Ld ...	7-1, Lyons Range ...	ditto	
702	Harvey, H L	... Assistant, Ralli Brothers ...	1 & 2, Church Lane ...	ditto	
703	Harvey, J	... Assistant, Becker, Grey & Co ...	7, Hastings Street ...	ditto	
704	Harvey, J	... Assistant, Hoare, Miller & Co ...	38, Strand Road ...	ditto	
705	Harvey, V	... Assistant, Shrager Brothers ...	28, Dalhousie Square ...	ditto	
706	Hawes, H	... Assistant, Graham & Co ...	9, Clive Street ...	ditto	
707	Hawkins, F G	... Assistant, Poppe Delius & Co ...	15, Clive Row ...	ditto	
*708	Hay, H H	... 5th class Clerk, Secretariat, Government of India, Public Works Department.	Imperial Secretariat Buildings	ditto	

709	Hayes, W	Assistant, Phelps & Co	15, Old Court House Street	...	ditto
710	Haythorne, E C C	Assistant, J Thomas & Co	8, Mission Row	...	ditto
711	Haywood, H M	Assistant Secretary, Bengal Chamber of Commerce.	2, Clive Street	...	ditto
712	Heather, A	Assistant, Sir Jacob Behrens and Sons.	3, Commercial Buildings	...	ditto
713	Hefferan, J	Assistant Examiner, 1st grade, Office of Ordnance and Army Clothing Branches.	Military Accounts Department Buildings, Koila Ghât Street.		ditto
714	Hefferan, J J	Assistant, Jessop & Co, Ld	93, Clive Street	...	ditto
715	Heilgers, K A	Assistant, F. W. Heilgers & Co	136, Canning Street	...	ditto
716	Heimann, H G	Assistant, Great Eastern Hotel Co, Ld.	1, 2 and 3, Old Court House Street.		ditto
*717	Hein, A G	Accountant, Accountant-General's Office, Public Works Department.	Imperial Secretariat Buildings		ditto
718	Heins, F N E	Draftsman, Bengal Secretariat, Public Works Department.	Writers' Buildings	...	ditto
719	Heins, G H C	Assistant, H Heins & Co	76, Dhurrumtollah Street	...	ditto
720	Heins, H A O	Assistant, H Heins & Co	76, Dhurrumtollah Street	...	ditto
721	Henderson, A	Assistant, Bird & Co	101-1, Clive Street	...	ditto
722	Henderson, W S	Assistant, Lemon, Blake & Co	3-1, Wellesley Place	...	ditto
723	Hendry, H R	Assistant, Ernsthausen, Ld	9, Clive Row	...	ditto
724	Henry, E J	Reader, Bengal Secretariat Press	Writers' Buildings	...	ditto
725	Herbert, L W A	Herbert, Parrott & Co	4-1, Government Place, North		ditto
726	Hewett, A S	Sub-Accountant, Chartered Bank of India, Australia and China.	5, Council House Street	...	ditto
727	Heynemann, K E	Merchant	4, Lyons Range	...	ditto
*728	Heysham, H S	Superintendent, Office of Secretary to the Government of India, Revenue and Agricultural Department, Forest Branch.	Imperial Secretariat Buildings		ditto

No.	Names.	Style or Calling.	Residence or place of business.	Religion.	Remarks.
	H				
*,*729	Heysham, T B	... 5th class Clerk, Secretariat, Government of India, Public Works Department.	Imperial Secretariat Buildings	Christian.	
730	Hickie, W A	... Assistant, Mackinnon, Mackenzie & Co	16, Strand ...	ditto	
731	Higgins, A W	... Assistant, Macfie and Macdonald ...	13-1, Old Court House Street	ditto	
732	Higgins, F R	... Assistant, Harold & Co ...	3, Dalhousie Square ...	ditto	
*,*733	Higgs, B	... Clerk, Foreign Office ...	Esplanade, West ...	ditto	
734	Highton, A D S	... Assistant, Depositors' Department, Bank of Bengal.	Strand ...	ditto	
735	Hilary, H J	... Junior Secretary to Agent, E I R	E I R House ...	ditto	
736	Hill, E P S	... Extra Assistant Superintendent, Surveyor-General's Office, Drawing Department.	13, Wood Street ...	ditto	
*,*737	Hill, H A M	... 3rd grade Accountant, Office of the Accountant-General, Military Department.	6, Esplanade Row, East ...	ditto	
738	Hill, W F	... Partner, Cooke & Kelvey ...	20, Old Court House Street ...	ditto	
739	Hill, W H	... Assistant, Cook & Co ...	182 and 183, Dhurrumtollah Street.	ditto	
740	Hilliard, G H	... Assistant, Carritt, Moran & Co ...	9, Mission Row ...	ditto	
741	Hillier, W E	... Acting Chief Assistant, Controller of Stores' Office, E I R.	E I R House ...	ditto	
742	Hippolite, C E	... Assistant, Graham & Co ...	9, Clive Street ...	ditto	
743	Hoskley, T W	... Assistant, Mackinnon, Mackenzie & Co	16, Strand ...	ditto	
744	Hodder, C	... Assistant, G E Bailey ...	8-2, Hastings Street ...	ditto	
*,*745	Hodgen, G	... Clerk, Foreign Office ...	Esplanade, West ...	ditto	
746	Hodges, A W	... Assistant, R B Rodda & Co ...	2, Wellesley Place ...	ditto	
747	Hodges, J S	... Measurer, Bengal Chamber of Commerce.	2, Clive Street ...	ditto	
748	Hodges, J W	... Assistant, T E Thomson & Co, Ld	9, Esplanade, East ...	ditto	
749	Hodgeton, David	... Partner, Don, Watson & Co ...	5, Commercial Buildings ...	ditto	
750	Hodgkinson, W	... Assistant, Balmer, Lawrie and Co ...	103, Clive Street ...	ditto	

751	Hoffstadt, W N	...	1st Clerk, Department of Land Records and Agriculture, Bengal.	Writers' Buildings	...	ditto
752	Hogan, P	...	Accountant, Office of Controller of Military Accounts, E C, Accounts Branch.	Military Accounts Department, 3, Koila Ghât Street.		ditto
753	Holden, H G	...	Assistant, George Henderson & Co ...	100, Clive Street	...	ditto
754	Holland, L	...	Assistant, Balmer, Lawrie & Co ...	103, Clive Street	...	ditto
755	Hollis, T R	...	Chief Clerk, Chief Engineer's Office, E I R.	E I R House	...	ditto
756	Holly, W H	...	Assistant, W Leslie & Co ...	2, Chowringhee	...	ditto
757	Holwell, C A	...	Assistant, Thacker, Spink & Co ...	5, Government Place	...	ditto
758	Hooper, C F	...	Assistant, Thacker, Spink & Co ...	5, Government Place	...	ditto
*759	Hooper, J M	...	Accountant, Accountant-General's Office, Public Works Department.	Imperial Secretariat Buildings		ditto
760	Hope, A	...	Assistant, Mackintosh, Burn & Co ...	8, Esplanade, East	...	ditto
761	Hope, W H	...	Assistant, Jessop & Co, Ld ...	93, Clive Street	...	ditto
762	Hoppen, S	...	Assistant, Mason, Hill & Rogers ...	19, Chowringhee	...	ditto
763	Horncastle, E	...	Assistant, Mackenzie, Lyall & Co ...	2, Lyons Range	...	ditto
*764	Horsley, F S	...	Clerk, Foreign Office ...	Esplanade, West	...	ditto
765	Horton, G T	...	Member, Dykes & Co ...	29, Waterloo Street	...	ditto
766	Hottinger, H W	...	Accountant, Office of Government Examiner of Railway Accounts, Public Works Department.	E I R House	...	ditto
767	Houston, W. McA	...	Assistant, Mackinnon, Mackenzie & Co	16, Strand	...	ditto
*768	Howe, C St J	...	Clerk, Foreign Office ...	Esplanade, West	...	ditto
769	Howe, T M	...	Assistant, Bengal Secretariat, Judicial, Political and Appointment Departments.	Writers' Buildings	...	ditto
770	Howse, F W	...	Partner, F W Howse & Co ...	3, Lall Bazar	...	ditto
771	Hughes, D P	...	Clerk, Audit Office, E I R ...	E I R House	...	ditto

No	Name.	Style or Calling	Residence or place of business	Religion.	Remarks.
	H				
*.*772	Hughes, E B	... Clerk, Foreign Office	... Esplanade, West	... Christian	
773	Hughes, W F	... Superintendent, Comptroller-General's Office.	The Treasury	... ditto	
774	Humble, C	... Assistant, Nash and Andrew	... 14, Government Place	... ditto	
775	Humphries, W G	... Herbert, Parrott & Co	... 4-1, Government Place, East	ditto	
776	Hunt, E	... Assistant, Heatly & Gresham, Ld	... 6, Waterloo Street	... ditto	
777	Hunt, J F	... Produce Broker	... 66, Dhurrumtollah Street	... ditto	
778	Hunter, A H	... Assistant, Mackintosh, Burn & Co	... 8, Esplanade, East	... ditto	
779	Hunter, C M	... Assistant, Andrew Yule & Co	... 7, Clive Row	... ditto	
780	Hurll, P	... Assistant, Finlay, Muir & Co	... 1, Clive Street	... ditto	
781	Hutchinson, R W	... Assistant, Birkmyre Brothers	... 6, Clive Row	... ditto	
782	Hutton, G A K	... Assistant, Walker, Goward & Co	... 32, Jackson's Ghât Street	... ditto	
783	Hyde, E	... Assistant, F & C Osler	... 12, Old Court House Street	... ditto	
784	Hyland, C P	... Assistant, Bindloss & Co	... 2, Commercial Buildings	... ditto	
785	Hynd, G	... Assistant, Perman & Hynd	... 23, Strand Road	... ditto	
786	Hynes, C	... Sub-Engineer, Office of Executive Engineer, Circular and Eastern Canals Division.	Writers' Buildings	... ditto	
*.*787	Hypher, J A	... 4th class Senior Clerk, Upper Division, Office of Secretary to the Government of India, Military Department.	6, Esplanade, East	... ditto	
*.*788	Hypher, P P	... Junior 3rd class Clerk, Lower Division, Office of Secretary to the Government of India, Military Department.	6, Esplanade, East	... ditto	

I

789	Imrie C	...	Assistant, H Clark & Co	...	5, Old Court House Street	... ditto
790	Incell, W	...	Gas-fitter	...	11, Weston's Lane	... ditto
791	Inglis, C D	...	Assistant, O Steel & Co	...	14, Old Court House Street	... ditto
792	Inglis, F	...	Gate Officer, Office of the Calcutta Port Commissioners.		Strand Road	... ditto
*.*793	Inglis, J W	...	Clerk, Foreign Office	...	Esplanade, West	... ditto
794	Ingman, G	...	Engineer, Oriental Telephone and Electric Co, Ld.		7, Pollock Street	... ditto
795	Ingram, B	...	Assistant, Office of Secretary to the Government of India, Finance and Commerce Department.		Treasury Buildings	... ditto

J

796	Jackson, G	...	Assistant, Whiteaway, Laidlaw & Co.		4, 5 & 6, Chowringhee	... ditto
797	Jackson, H G	...	Accident Registrar, Chief Superintendent's Office, Traffic Department, E I R.		E I R House	... ditto
798	Jackson, J E	...	Assistant Auditor, E I R	...	E I R House	... ditto
799	Jackson, T	...	Assistant Auditor, E I R	...	E I R House	... ditto
800	Jacob, Chas	...	Assistant, Mackinnon, Mackenzie & Co		16, Strand	... ditto
801	James, A W N	...	Engraver, Engraving Department, Surveyor General's Office.		13, Wood Street	... ditto
802	James, H A	...	Assistant, Bengal Secretariat, Public Works Department.		Writers' Buildings	... ditto
*.*803	James, J D R	...	7th class Clerk, Secretariat, Government of India, Public Works Department.		Imperial Secretariat Buildings	ditto
*.*804	James, L E (Jr)	...	Accountant, Office of Accountant-General, Public Works Department.		Imperial Secretariat Buildings	ditto
*.*805	James, L E (Sr)	...	Clerk, Office of Accountant-General, Public Works Department.		Imperial Secretariat Buildings	ditto
806	James, P	...	Assistant, Dykes & Co	...	29, Waterloo Street	... ditto
807	James, R Langford	...	Assistant, Finlay, Muir & Co	...	1, Clive Street	.... ditto

No.	Names.	Style or Calling.	Residence or place of business.	Religion.	Remarks.
	J				
808	Jameson, S	... Assistant, Shaw, Wallace & Co	... 20, Strand Road	...	Christian
809	Janes, J	... Assistant, Heatly & Gresham, Ld	... 6, Waterloo Street	....	ditto
810	Jardine, A	... Assistant, Macneill & Co	... 2, Clive Ghât Street	...	ditto
811	Jarey, W	... Assistant, G. E. Hotel Co, Ld	... 1, 2 and 3, Old Court House Street.		ditto
812	Jenkins, R A Arnold	... Chief Assistant, P & O S N Co	... 19, Strand Road	...	ditto
813	Jennaway, J H	... Assistant, Martin & Co	... Jackson House	...	ditto
814	Jennings, H B	... Printer, Traill & Co.	... 20, British Indian Street	...	ditto
815	Jensen, Captain	... Assistant, Kilburn & Co	... 4, Fairlie Place	...	ditto
816	Jewell, H A	... Proprietor, Cones & Co	... 19, Lall Bazar Street	...	ditto
817	Jewell, W R C	... Deputy Traffic Manager, Office of the Calcutta Port Commissioners.	Strand Road	...	ditto
818	Jewett, E W	... Accountant, Calcutta Mint	... 47, Strand Road, North	...	ditto
819	Jeyses, L D	... Assistant, Litho Branch, Surveyor-General's Office.	14, Wood Street	...	ditto
820	Joachim, S E	... 2nd grade Accountant, Office of Examiner, P W Accounts, Bengal.	8, Lyons Range	...	ditto
821	Joakim, E	... Accountant, Walter, Locke & Co, Ld	4, Esplanade	...	ditto
822	Joakim, H J C	... Assistant, Office of Secretary to the Government of India, Finance and Commerce Department.	Treasury Buildings	...	ditto
823	Johnson, A	... Measurer, Licensed Measurers' Department, Bengal Chamber of Commerce.	2, Clive Street	...	ditto
824	Johnson, E	... Clerk, Agent's Office, E I R	... E I R House	...	ditto
825	Johnson, E A	... 6th class Clerk, Secretariat, Government of India, Public Works Department.	Imperial Secretariat Buildings		ditto
826	Johnson, G E	... Assistant, Bengal Secretariat, P W D	Writers' Buildings	...	ditto
827	Johnson, John	... Manager, Davidson & Co, Ld	... 2, Lall Bazar	...	ditto

828	Johnston, J E	...	Boiler Inspector, Office of the Commissioners for the Inspection of Steam-boilers.	309, Bow Bazar Street	...	ditto
829	Johnstone, W	...	Deputy Superintendent, Bengal Secretariat Press.	Writers' Buildings	...	ditto
830	Johnstone, W H	...	District Engineer, District No. I, Municipal Office.	79, Cornwallis Street	...	ditto
831	Jones, E P	...	Superintendent, Accountant-General's Office, Bengal.	The Treasury	...	ditto
832	Jones, J C	...	Assistant, Bengal Secretariat, Public Works Department.	Writers' Buildings	...	ditto
833	Jones, R	...	Assistant, J Monteith & Co ...	21, Old Court House Street	...	ditto
834	Jones, S T	...	Accountant, Office of Pay Examiner, Military Accounts Department, E C	3, Koila Ghât Street	...	ditto
835	Jones, W F	...	Assistant, Whiteaway, Laidlaw & Co	4-6, Chowringhee	...	ditto
836	Jones, W J	...	Assistant Time Table Clerk, Chief Superintendent's Office, Traffic Department, E I R.	E I R House	...	ditto
837	Jones, W M	...	Market Superintendent ...	Municipal Market	...	ditto
838	Jordan, C F	...	Assistant, Ahmuty & Co ...	6, Church Lane	...	ditto
839	Jordan, S D	...	Electrical Supervisor, Office of Electrical Engineer to the Government of Bengal.	58, Chowringhee	...	Armenian
840	Joseph, Samuel	...	Superintendent, Gowkhana, District No. III, Municipal Office.	10, Sudder Street	...	ditto
841	Joshua, A	...	Assistant, Shrager Brothers ...	28, Dalhousie Square	...	ditto
842	Joslard, R E	...	Partner, Steuart & Co ...	8, Old Court House Corner	...	Christian
843	Jowitt, J E	...	Assistant, Robinson, Morrison & Co	5, Commercial Buildings	...	ditto
844	Joynt, E W	...	Clerk, Office of Government Examiner of Railway Accounts, P W D.	E I R House	...	ditto
845	Judah, J S	...	Assistant, David Sassoon & Co, Ld	3, Fairlie Place	...	Jew
846	Judge, L C G	...	Assistant Editor, *Indian Gardening and Planting.*	5-1, Council House Street	...	Christian
847	Justice, A	...	Assistant, Bird & Co ...	101-1, Clive Street	...	ditto

No.	Names.	Style or Calling.	Residence or place of business.	Religion.	Remarks.
	K				
848	Kay, G H	... Assistant, F & C Osler ...	12, Old Court House Street ...	Christian	
849	Kee, R	... Assistant, Birkmyre Brothers ...	6, Clive Row ...	ditto	
850	Kelly, P F	... Sub-Assistant Auditor, E I R ...	E I R House ...	ditto	
*.*851	Kelly, W	... Accountant, Accountant-General's Office, P W D.	Imperial Secretariat Buildings	ditto	
852	Kelly, W. G.	... Teacher, La Martinière College ...	11, Loudon Street ...	ditto	
853	Kelso, J S	... Assistant, Jardine, Skinner & Co ..	4, Clive Row ...	ditto	
854	Kemp, J	... Assistant, Macneill & Co ...	2, Clive Ghât Street ...	ditto	
*.*855	Kennedy, W A	... Clerk, Foreign Office ...	Esplanade, West ...	ditto	
856	Kerr, C J	... Assistant, Mackinnon, Mackenzie & Co.	16, Strand ...	ditto	
857	Kerr, F S	... Assistant, Bombay Company, Ld ...	7-1, Lyons Range ...	ditto	
858	Kershaw, L E	... Assistant, Office of Secretary to the Government of India, Finance and Commerce Department.	Treasury Buildings ...	ditto	
359	Kidd, J O	... Assistant, Macneill & Co ...	2, Clive Ghât Street ...	ditto	
860	Kiernander, O L	... Assistant, Bird & Co ...	101-1, Clive Street ...	ditto	
861	Kiernander, W J	... Assistant, Kilburn & Co ...	4, Fairlie Place ...	ditto	
862	Killick, C	... Assistant Secretary, Office of the Calcutta Port Commissioners.	Strand ...	ditto	
863	King, Jeremia Gerald	... Assistant, James Luke & Sons ...	6, Pollock Street ...	ditto	
864	King, J R	... 2nd grade Assistant Examiner, Office of Controller of Military Accounts, E C.	3, Koila Ghât Street ...	ditto	
865	King, Millar M	... Assistant Manager, J King & Co, Ld	40, Strand Road ...	ditto	
866	Kingcome, C	... Assistant, Ralli Brothers ...	1 & 2, Church Lane ...	ditto	
867	Kingsley, G	... Partner, Shaw, Wallace & Co ...	20, Strand Road ...	ditto	
*.*868	Kirk, J E G	... Junior 5th class Clerk, Lower Division, Office of Secretary to the Government of India, Military Department.	6, Explanade, East ...	ditto	
*.*869	Kirkpatrick, C W	... Clerk, Foreign Office ...	Esplanade, West ...	ditto	
870	Kirkpatrick, S R	... Teacher, La Martinière College ...	11, Loudon Street ...	ditto	

871	Klopp, C	...	Partner, Blacker & Co	...	2, Clive Street	... ditto
872	Knolles, F S	...	Assistant, I R G P T W & Co, Ld	...	1-1, Fairlie Place	... ditto
873	Knox, J	..	Deputy Superintendent, Licensed Measurers' Department, Bengal Chamber of Commerce.		2, Clive Street	... ditto
874	Knox-Ord, J	...	Assistant, Ralli Brothers	...	1 & 2, Church Lane	... ditto
875	Knox-Ord, W	...	Assistant, Ralli Brothers	...	1 & 2, Church Lane	... ditto
876	Kraal, G A	...	Assistant, Moran & Co	...	3, Mangoe Lane	... ditto
877	Kunning, A B	...	Junior 3rd class Clerk, Lower Division, Office of Secretary to the Government of India, Military Department.		6, Esplanade, East	... ditto

L

878	Laing, J M	...	Passing Officer, Bank of Bengal	...	Strand	.. ditto
879	Laird, A P	...	Assistant, Bird & Co	...	101-1, Clive Street	... ditto
880	Laird, W K	...	Assistant, Mackinnon, Mackenzie & Co		16, Strand	... ditto
881	Lamb, F H E	...	Assistant, Barry & Co	...	5, Lyons Range	... ditto
882	Lambert, W O	...	Assistant, Ranken & Co	...	4, Old Court House Street	... ditto
883	Landale, H R	...	Assistant, George Henderson & Co	...	100, Clive Street	... ditto
884	Lane, E M	...	Assistant, King, Hamilton & Co	...	7, Hare Street	.. ditto
885	Lane, F J	...	Assistant, T E Thomson & Co, Ld	...	9, Esplanade, East	... ditto
886	Lane, V B	...	Assistant, Ralli Brothers	...	1 & 2, Church Lane	... ditto
887	Lang, W C	...	Accountant, Standard Oil Co of New York.		8, Dalhousie Square, East	... ditto
888	Langford, H	...	Passing Officer, Bank of Bengal	...	Strand	... ditto
889	Langham, S C	...	Assistant, Gillanders, Arbuthnot & Co		8, Clive Street	... ditto
890	Lapsley, E J	...	Assistant, Depositors' Department, Bank of Bengal.		Strand	... ditto
891	Lardner, D S	...	Partner, Lardner & Co	...	4, Commercial Buildings	... ditto
892	Last, C P	...	Assistant, Army and Navy Co-operative Society, Ld.		41, Chowringhee	... ditto
893	LaTouche, P	...	Assistant, Grossmann & Co	...	2, Fairlie Place	... ditto
894	Latten, R G	...	Assistant, Whiteaway, Laidlaw & Co		4, 5 and 6, Chowringhee	... ditto

No.	Names.	Style or Calling.	Residence or place or business.	Religion.	Remarks.
895	Laurie, V ...	Assistant, T E Thomson & Co, Ld ...	9, Esplanade, East ...	Christian	
896	LaValette, J A ...	Shorthand Writer, G T M's Office, E I R.	E I R House ...	ditto	
897	Lavalette, W C ...	Assistant, F & C Osler ...	12, Old Court House Street ...	ditto	
898	Laville, B L A ...	Assistant, Finance and Commerce Department.	Treasury Buildings ...	ditto	
*899	Law, C H ...	Assistant, Office of Secretary to the Government of India, Legislative Department.	Legislative Department Office, 5, Esplanade, West.	ditto	
900	Law, R O ...	Assistant, Birkmyre Brothers ...	6, Clive Row ...	ditto	
901	Lawrence, H S ...	Assistant, Catholic Orphan Press ...	4, Portuguese Church Street ...	ditto	
902	Lawrence, W F ...	Assistant, C Lazarus & Co ...	60, Bentinck Street ...	ditto	
903	Laws, W W ...	Assistant, Thos. Cook & Son ...	9, Old Court House Street ...	ditto	
904	Lawson, A ...	Assistant, Mackenzie, Lyall & Co ...	2, Lyons Range ...	ditto	
905	Lawton, S ...	Assistant, F & C Osler ...	12, Old Court House Street ...	ditto	
906	Lean, R ...	Assistant, Shaw, Wallace & Co ...	20, Strand Road ...	ditto	
907	Leatham, H H ...	Accountant, 2nd grade, Office of Examiner of Ordnance and Army Clothing Branches.	Military Accounts Department Buildings, Koila Ghât Street.	ditto	
908	LeCocq, J M ...	Assistant, James Nourse, Ld ...	5, Commercial Buildings ...	ditto	
909	Lee, W A ...	Assistant, Hoare, Miller & Co ...	38, Strand Road ...	ditto	
910	Leeson, R G ...	Manager, R B Rodda & Co ...	2, Wellesley Place ...	ditto	
911	LeFaucheur, Robert ...	Typist, North British and Mercantile Insurance Office.	100, Clive Street ...	ditto	
912	LeFranc, E A ...	Assistant Litho. Printer, Surveyor-General's Office.	14, Wood Street ...	ditto	
913	LeFranc, S H ...	General Assistant, Office of Superintendent, Government Printing, India.	166, Dhurrumtollah Street ...	ditto	
914	LeFranc, W E ...	Assistant, Thacker, Spink & Co ...	5, Government Place ...	ditto	
*915	Leicester, W ...	6th class Clerk, Secretariat, Government of India, P W D.	Imperial Secretariat Buildings	ditto	
916	Leigh-Hunt, P C C ...	Assistant, Lovelock and Lewes ...	25, Mangoe Lane ...	ditto	
917	Lemon, W S ...	Partner, Lemon, Blake & Co ...	3-1, Wellesley Place ...	ditto	
918	LeRoy, P ...	Assistant, Mackinnon, Mackenzie & Co	16, Strand ...	ditto	
919	Leslie, George ...	Representative, John Dewar and Sons, Ld.	10, Hare Street ...	ditto	
920	Leslie, James A ...	Manager, W Leslie & Co ...	60, Dhurrumtollah Street ...	ditto	

921	Leslie, M	...	Assistant, W Leslie & Co	..	2, Chowringhee	...	ditto
922	Leslie, W	...	Partner, W Leslie & Co	...	2, Chowringhee	...	ditto
923	Leslie, Wm	...	Partner, Don, Watson & Co	...	5, Commercial Buildings	...	ditto
924	Levaro, J B	...	4th grade Clerk, Office of Examiner of Ordnance Factory Accounts in India		1, Koila Ghât Street	...	ditto
925	Levy, Ezra S	...	Assistant, David Sassoon & Co, Ld	...	3, Fairlie Place	...	Jew
926	Lewes, A H	...	Assistant, Lovelock & Lewes	...	25, Mangoe Lane	...	Christian
927	Lewis, A	...	Draper, Hall and Anderson	...	31, Chowringhee	...	ditto
928	Lewis, G (Sr)	...	Assistant, Reuter's Telegram Co, Ld		102, Clive Street	...	ditto
929	Lewis, T	...	Assistant, Reuter's Telegram Co, Ld		102, Clive Street	...	ditto
930	Lewis, W	...	Assistant, Whiteaway, Laidlaw & Co		4, 5 & 6, Chowringhee	...	ditto
931	Lidderdale, J S	...	Assistant, Bombay Company, Ld	...	7-1, Lyons Range	...	ditto
932	Lindsay, B R C	...	Assistant, Turner, Morrison & Co	...	6, Lyons Range	...	ditto
933	Lindsay, R	...	Assistant, J Davies & Co	.	6, Mangoe Lane	...	ditto
934	Linsell, T P	...	Assistant, Kilburn & Co	...	4, Fairlie Place	...	ditto
935	Linton, P F	...	Assistant, F W Heilgers & Co	...	136, Canning Street	...	ditto
936	Lissant, S H	...	Assistant, G F Kellner & Co	...	32, Chowringhee	...	ditto
937	Lister, I L	...	Assistant, Macfie and Macdonald	...	13-1, Old Court House Street		ditto
938	Little, C G	...	Supervising Officer, Drawing Department, Surveyor-General's Office.		13, Wood Street	...	ditto
939	Little, F C	...	Assistant Traffic Superintendent, B C R		159-1, Bow Bazar Street	...	ditto
940	Lloyd, E H	...	Assistant, G F Kellner & Co	...	32, Chowringhee	...	ditto
941	Lloyd, J B	...	Partner, Shaw, Wallace & Co	...	20, Strand Road	...	ditto
942	Lodge, A	...	Assistant, Army and Navy Co-operative Society, Ld.		41, Chowringhee	...	ditto
943	Logie, A	...	Assistant, Bird & Co	..	101-1, Clive Street	...	ditto
944	Long, A D	...	Assistant, W Newman & Co	..	4, Dalhousie Square	...	ditto
945	Longair, J P	...	Assistant, King Brothers	...	102, Clive Street	...	ditto
946	Longley, F A S	...	Assistant, McLeod & Co	...	31, Dalhousie Square	...	ditto
947	Longley, F L	...	Partner, Lemon Brothers	...	3 and 4, Hare Street	...	ditto
948	Lorimer, C E	...	Assistant, Calcutta Trades Association		Dalhousie Institute	..	ditto
949	Lovell, F, Captain	..	Assistant Conservator, Port Commissioners' Office.		Strand	...	ditto
950	Lovett, P	...	Assistant Editor, *Indian Daily News*		19, British Indian Street	...	ditto
951	Lowther, H N	...	Assistant, W Haworth & Co	...	1, Mission Row	...	ditto

No.	Names.	Style or Calling.	Residence or place of business	Religion.	Remarks.
	L				
952	Luckhurst, P J ...	Assistant, W Leslie & Co ...	2, Chowringhee ...	Christian	
**953	Lumsden, J R ...	Clerk, Foreign Office ...	Esplanade, West ...	ditto	
**954	Lumsden, J S K ...	Assistant Examiner, 2nd grade, Office of Accountant-General, Military Department.	6, Esplanade Row, East ...	ditto	
955	Lyon, E A ...	Assistant, J Thomas & Co ...	8, Mission Row ...	ditto	
956	Lyon, James ...	Firm of Lyon and Lyon ...	Chowringhee ...	ditto	
957	Lyons, E ...	Assistant, Government of India, Statistical Department.	7, Koila Ghât Street ...	ditto	
958	Lys, G D ...	Assistant, Graham & Co ...	9, Clive Street ..	ditto	
	M				
959	Mabbett, Edward D ...	Assistant, Cooke and Kelvey	20, Old Court House Street...	ditto	
960	Macdonald, J ...	Sub-Accountant, Chartered Bank of India, Australia and China.	5, Council House Street ...	ditto	
961	Macdonald, K M ..	1st Assistant, Depositors' Department. Bank of Bengal.	Strand ...	ditto	
962	Macdonald, T J ...	Traffic Inspector, Bengal Central Railway.	159-1, Bow Bazar Street ...	ditto	
963	MacDowell, N L ...	Assistant, MacDowell & Co ...	7-1, Wellesley Place ...	ditto	
964	Macfie, W ...	Partner, Macfie and Macdonald ...	13-1, Old Court House Street	ditto	
965	MacJohn, J ...	Proprietor, J MacJohn & Co ...	37, Canning Street ...	ditto	
966	Mackellar, G B ..	Assistant, Marshall Sons & Co, Ld ...	99, Clive Street ...	ditto	
967	Mackenzie, deC ...	Assistant, Carritt, Moran & Co ...	9, Mission Row ...	ditto	
968	Mackenzie, H C ...	Assistant Superintendent, Accountant-General's Office, Bengal.	The Treasury ...	ditto	
969	Mackenzie, J ...	Assistant, Macneill & Co ...	2, Clive Ghât Street ...	ditto	
970	Mackenzie, J B ...	Assistant Litho Printer, Surveyor-General's Office.	14, Wood Street ...	ditto	
971	Mackmurdo, E L ...	Assistant, Commercial Bank of India, Ld.	5-1, Fairlie Place ...	ditto	

972	MacLaren, J	...	Assistant, Hamilton & Co	...	8, Old Court House Street	ditto
973	MacLean, A	...	Assistant Manager, John Dewar & Sons, Ld.		10, Hare Street	ditto
974	MacLeod, D Macgregor	..	Partner, D M MacLeod & Co	...	10, Clive Street	ditto
975	Macleod, J C	...	Assistant, McLeod & Co	...	31, Dalhousie Square	ditto
976	MacMahon, A	...	Clerk, Office of Superintendent, Government Printing, India.		8, Hastings Street	ditto
977	Macpherson, A G H	...	Partner, Pigott, Chapman & Co	...	1, Mission Row	ditto
978	Macpherson, H R	...	Assistant Accountant, Bank of Bengal		Strand	ditto
979	Macrodt, G F	...	Assistant, Graham & Co	...	9, Clive Street	ditto
980	MacVicar, R J	...	Assistant, Martin & Co	...	Jackson House	ditto
981	Madge, A A	...	Assistant, Macneill & Co	...	2, Clive Ghât Street	ditto
982	Madge, D H	...	Assistant, Balmer, Lawrie & Co	...	103, Clive Street	ditto
983	Madras, S O	...	Extra Assistant Superintendent, Surveyor-General's Office, Drawing Department.		13, Wood Street	ditto
984	Main, J	...	Assistant Accountant, Mercantile Bank of India, Ld.		28, Dalhousie Square	ditto
985	Maldin, A H	...	Inspector, Licensed Measurers' Department, Bengal Chamber of Commerce.		2, Clive Street	ditto
986	Manasseh, J S	...	Assistant, S Manasseh & Sons	...	7, Mission Row	Jew
987	Manders, T C	...	Assistant, Shaw, Wallace & Co	...	20, Strand Road	Christian
988	Mann, Jas Y	...	Assistant, Thomas, Duff & Co, Ld	...	15, Clive Row	ditto
989	Mansell, R V	...	Assistant, Finlay, Muir & Co		1, Clive Street	ditto
990	Mansfield, E H	...	Accountant, Office of Pay Examiner, Military Accounts Department, E C.		3, Koila Ghât Street	ditto
991	Mansfield, L E A	...	Superintendent, Office of Controller of Military Accounts, E C, Supply and Transport Branch.		3, Koila Ghât Street	ditto
992	Manuel, W	...	Superintendent, Foreign Office	...	Esplanade, West	ditto
993	Manuk, J M G	...	Partner, J G Bagram & Co	...	14-2, Clive Row	ditto

No.	Names	Style or Calling.	Residence or place of business.	Religion.	Remarks.
	M				
994	Manuk, J T	... Gate Officer, Office of the Calcutta Port Commissioners.	Strand Road ...	Christian	
995	Manuk, M A	... Measurer, Bengal Chamber of Commerce.	2, Clive Street ...	ditto	
996	Mapleston, F N	... Assistant, Barlow & Co ...	37, Strand Road ...	ditto	
997	Marchant, H M L	... 5th class Clerk, Secretariat, Government of India, Public Works Department.	Imperial Secretariat Buildings	ditto	
998	Marinan, C T	... Clerk, Imperial Record Department...	Government Place, West ...	ditto	
999	Marling, A	.. Assistant Superintendent, Office of the Calcutta Port Commissioners.	Strand Road ..	ditto	
1000	Marriman, W	... Supervisor of Jetties, Office of the Calcutta Port Commissioners.	Strand Road ...	ditto	
1001	Marsden, C N	... Assistant, Graham & Co ...	9, Clive Street ...	ditto	
1002	Marsden, H C	... Clerk, Home Department ...	Home Department ...	ditto	
1003	Marshall, D E	... Assistant, Mackenzie, Lyall & Co ...	2, Lyons Range ...	ditto	
1004	Marshall, G	... Assistant Superintendent, Bengal Coal Co, Ld.	5, Fairlie Place ...	ditto	
1005	Marshal, J D	... Assistant, Lyall, Marshall & Co ...	25, Mangoe Lane ...	ditto	
1006	Martin, A D	... Clerk, Foreign Office ...	Esplanade, West ...	ditto	
1007	Martin, A H	... Assistant, Steuart & Co ...	8, Old Court House Corner ...	ditto	
1008	Martin, C H	... Assistant, Office of Secretary to the Government of India, Revenue and Agricultural Department, Agriculture Branch.	Imperial Secretariat Buildings	ditto	
1009	Martin, C R	... Inspector of Vacant Houses, Municipal Office.	Municipal Office ...	ditto	
1010	Martin, E D	... Assistant, Atkinson Brothers, Ld ...	13, Chowringhee ...	ditto	
1011	Martin, G F	... Assistant, Pigott, Chapman & Co ...	1, Mission Row ...	ditto	
1012	Martin, J G	... Assistant, Ashworth Taylor & Co ...	134, Canning Street ...	ditto	
1013	Martin, J P	... Measurer, Bengal Chamber of Commerce.	2, Clive Street ...	ditto	
1014	Martin, M H	... Assistant, Bengal Chamber of Commerce.	2, Clive Street ...	ditto	

*1015	Martin, O L	...	Clerk, Foreign Office	...	Esplanade, West	... ditto
1016	Martin, P	...	Shed Officer, Office of the Calcutta Port Commissioners.		Strand Road	... ditto
1017	Martyr, J P	...	Assistant, Office of Secretary to the Government of Bengal, Public Works Department.		Writers' Buildings	... ditto
1018	Martyr, E L	...	Assistant to Director of Public Instruction, Bengal.		Writers' Buildings	... ditto
1019	Marum, J J	...	Examiner, Office of Superintendent, Government Printing, India.		8, Hastings Street	... ditto
1020	Mason, H W T	...	Assistant, Turner, Morrison & Co	...	6, Lyons Range	... ditto
1021	Master, A W	...	Assistant, P & O S N Co	...	19, Strand Road	... ditto
1022	Matheison, A G	...	Assistant, Anderson, Wright & Co	...	22, Strand Road	... ditto
1023	Mathew, H A W	...	Assistant Auditor, E I R	...	E I R House	... ditto
1024	Mathews, J W	...	Assistant, Jessop & Co, Ld	...	93, Clive Street	... ditto
1025	Mathewson, Francis	...	Superintendent, P & O S N Co	...	19, Strand Road	... ditto
1026	Mathias, J C	...	Accountant, Office of Examiner of Ordnance Factory Accounts in India.		1, Koila Ghât Street	... ditto
1027	Matlack, H	...	Assistant, Burk Brothers	...	2 & 4, Peter's Lane	... ditto
1028	Maugey, E A	...	Assistant, Geo Beaver & Co	...	8-1, Dalhousie Square, East	... ditto
1029	Maugey, J D	...	Jr. 2nd class Clerk, Lower Division, Office of Secretary to the Government of India, Military Department.		6, Esplanade, East	... ditto
1030	Maunder, R A	...	Assistant, Government Account Department, Bank of Bengal.		Strand	... ditto
1031	Mayall, E A	...	Assistant, Kilburn & Co	...	4, Fairlie Place	... ditto
1032	Mayer, C	...	Measurer, Licensed Measurers' Department, Bengal Chamber of Commerce.		2, Clive Street	... ditto
1033	Mayer, G	...	Assistant, Army and Navy Co-operative Society, Ld.		41, Chowringhee	... ditto
1034	McAllen, H	...	Clerk of Works, Calcutta Water Works Department.		5, Corporation Street	... ditto

No.	Names.	Style or Calling.	Residence or place of business.	Religion.	Remarks.
	M				
1035	McCann, T	... Superintendent, Accountant-General's Office, Bengal.	The Treasury ...	Christian	
1036	McCarthy, J	... Assistant, F & C Osler ...	12, Old Court House Street ...	ditto	
1037	McClure, D S	... Head Assistant, Branch Department, Bank of Bengal.	Strand ...	ditto	
1038	McCombie, G S	... Assistant, Finlay, Muir & Co ...	1, Clive Street ...	ditto	
1039	McCulloch, W M	... Sub-Accountant, Chartered Bank of India, Australia and China.	5, Council House Street ...	ditto	
1040	McCurrach, D F	... Assistant, Mackintosh, Burn & Co ...	8, Esplanade, East ...	ditto	
1041	McDonald, Angus	... Manager of Eng. Department, D T Kevmer & Co.	1-1, Council House Street ...	ditto	
1042	McDonnell, T	... Assistant, Office of Secretary to the Government of India, Revenue and Agricultural Department, Emigration Branch.	Imperial Secretariat Buildings	ditto	
1043	McEwan, F E	... Assistant, Anderson, Wright & Co ...	22, Strand Road ...	ditto	
1044	McFarlane, A C	... Assistant, Place, Siddons and Gough	1, Commercial Buildings ...	ditto	
1045	McGinn, W G	... Assistant, Shrager Brothers ...	28, Dalhousie Square ...	ditto	
1046	McGlashon, John	... Resident Engineer, Office of the Calcutta Port Commissioners.	Strand Road ...	ditto	
1047	McInerney, J F H	... Accountant, Office of the Calcutta Port Commissioners.	Strand Road ...	ditto	
1048	McInnes, P J	... Assistant, W Leslie & Co ...	2, Chowringhee ...	ditto	
1049	McIntyre, A N	... Laboratory Assistant, Office of Electrical Engineer to the Government of Bengal.	58, Chowringhee ...	ditto	
1050	McIntyre, R L	... Assistant, King Brothers ...	102, Clive Street ...	ditto	
1051	McKechnie, D	... Assistant, Lovelock and Lewes ...	25, Mangoe Lane ...	ditto	
1052	McKenzie, A E	... Assistant, F W Heilgers & Co ...	136, Canning Street ...	ditto	
1053	McLatchie, A L	... Assistant, Balmer, Lawrie & Co ...	103, Clive Street ...	ditto	
1054	McLean, C S	... Assistant, Bengal Secretariat, General and Revenue Departments.	Writers' Buildings ...	ditto	
1055	McLeavy, G E	... Accountant, W H Harton & Co ...	30, Strand Road ...	ditto	

1056	McLeod, D	...	Assistant, Army and Navy Co-operative Society, Ld.	41, Chowringhee	...	ditto
*1057	McMahon, A	...	Assistant, Office of Secretary to the Government of India, Legislative Department.	Legislative Department Office, 5, Esplanade, West.		ditto
1058	McPherson, R	...	Assistant, Thacker, Spink & Co ...	5, Government Place	...	ditto
1059	McVicar, R	...	Assistant, C Lazarus & Co ...	60, Bentinck Street	...	ditto
1060	Mead, G	...	Assistant, Whiteaway, Laidlaw & Co	4, 5 and 6, Chowringhee	...	ditto
1061	Meade, C J	...	Assistant Litho Printer, Surveyor-General's Office.	14, Wood Street	...	ditto
1062	Medland, J W	...	Assistant, Manton & Co ...	13, Old Court House Street	...	ditto
1063	Medley, Lewis	...	Assistant, A & J Main & Co, Ld ...	31, Dalhousie Square	...	ditto
1064	Medlycott, A	...	Assistant, Board of Revenue, L P ...	2, Bankshall Street	...	ditto
1065	Meik, A C	...	Printing Superintendent, E I R ...	E I R House	..	ditto
1066	Mendes, E L	...	3rd grade Accountant, Office of Examiner, P W Accounts, Bengal.	8, Lyons Range	...	ditto
*1067	Mendes, J M	...	Deputy Examiner, 1st grade, Office of Accountant-General, Military Department.	6, Esplanade Row, East	...	ditto
1068	Mendieta, R J	...	Clerk, Surveyor-General's Office, Correspondence Branch.	13, Wood Street	...	ditto
1069	Merry, G B	...	Assistant, J Thomas & Co ...	8, Mission Row	...	ditto
*1070	Meyer, A	...	4th class Senior Clerk, Upper Division, Office of Secretary to the Government of India, Military Department.	6, Explanade, East	...	ditto
1071	Meyer, R	...	Assistant, Becker, Grey & Co ...	7, Hastings Street .	...	Jew.
1072	Michael, J A	...	Clerk, J G Bagram & Co ...	14-2, Clive Row	...	Christian
1073	Michael, P S	...	Assistant, McLeod & Co ...	31, Dalhousie Square	...	ditto
1074	Michie, C	...	Assistant, J Thomas & Co ...	8, Mission Row	...	ditto
1075	Mignon, S C	...	Assistant, Ralli Brothers ...	1 & 2, Church Lane	...	ditto
1076	Milchem, A E	...	Assistant, F & C Osler ...	12, Old, Court House Street	..	ditto
1077	Miller, G S	...	Assistant, Shaw, Wallace & Co ...	20, Strand Road	...	ditto
1078	Miller, J R	...	Assistant, Shrager Brothers ...	28, Dalhousie Square	..	ditto
*1079	Mills, W D	...	Clerk, Office of Accountant-General, P W D.	Imperial Secretariat Buildings		ditto
1080	Milne, T A	...	Registrar, Surveyor-General's Office, Correspondence Branch.	13, Wood Street	...	ditto

No.	Names.	Style or Calling.	Residence or place of business.	Religion.	Remarks.
	M				
1081	Milne, W J	... Assistant, Williamson, Magor & Co...	4, Mangoe Lane ...	Christian	
1082	Milsted, W P S	... Principal, Armenian College ...	Armenian College ...	ditto	
1083	Minstrell, G	... Assistant, Jas Monteith & Co ...	21, Old Court House Street	ditto	
1084	Mitchell, A S	... Partner, Mitchell & Co ...	17, Chowringhee ...	ditto	
1085	Mitchell, D	... Assistant, Stein, Forbes & Co, Ld ...	12, Dalhousie Square ...	ditto	
1086	Mitchell, E A	... Assistant, W S Cresswell & Co ...	10, Hare Street ...	ditto	
1087	Mitchell, J	... Assistant Accountant, National Bank of India, Ld.	104, Clive Street ...	ditto	
1088	Molinero, H	... Assistant, Office of Secretary to the Government of India, Legislative Department.	Legislative Department Office, 5, Esplanade, West,	ditto	
1089	Monnier, C E	... Measurer, Licensed Measurers' Department, Bengal Chamber of Commerce.	2, Clive Street ...	ditto	
1090	Monnier G A	... Measurer, Licensed Measurers' Department, Bengal Chamber of Commerce.	2, Clive Street ...	ditto	
1091	Monro J	... Assistant, Backer, Gray & Co ...	7, Hastings Street ...	ditto	
1092	Monteath, A M	... Assistant, Mackinnon, Mackenzie & Co	16, Strand ...	ditto	
1093	Montgomery, C R	... Agent, I R G P T W & Co, Ld ...	1-1, Fairlie Place ...	ditto	
1094	Moore, E A	... Assistant, Army and Navy Co-operative Society, Ld.	41, Chowringhee ...	ditto	
1095	Morby, W E A	.. Engineer, Kilburn & Co ...	4, Fairlie Place ...	ditto	
1096	Morgan, C	... Assistant, Great Eastern Hotel Co, Ld.	1, 2 & 3, Old Court House Street.	ditto	
1097	Morgan, F	... Assistant, Balmer, Lawrie & Co ...	103, Clive Street ...	ditto	
1098	Morgan, W	... Hackney Carriage Inspector, Calcutta Corporation	Municipal Office ...	ditto	
1099	Morley, M H A	... Assistant, Office of Secretary to the Government of India, Revenue and Agricultural Department, Patents Branch.	[illegible]rial Secretariat Buildings	ditto	
1100	Morrison, D	... Assistant, Hall & Anderson ...	31, Chowringhee ...	ditto	
1101	Morrison, E J	... Partner, Morrison and Cottle ...	2, Esplanade Row, East ...	ditto	

1102	*Morrison, H St J*	...	Assistant, Office of Inspector-General of Police, L P.	Writers' Buildings ...	ditto
1103	Morrison, M	...	Assistant, W Haworth & Co ...	1, Mission Row ...	ditto
1104	Morrison, R M	...	Assistant, F W Heilgers & Co ..	136, Canning Street ..	ditto
1105	Morse, R W	...	Assistant, Bird & Co ...	101-1, Clive Street ...	ditto
**1106	Moses, C	...	Assistant, Office of Secretary to the Government of India, Legislative Dept.	Legislative Department Office, 5, Esplanade, West.	ditto
1107	Moses, P C	...	Overseer, Bengal Secretariat Press ...	Writers' Buildings ...	ditto
1108	Mudge, C R	...	Assistant, *Statesman* Office ...	3, Chowringhee ...	ditto
1109	Muir, J	...	Assistant, Macfie & Macdonald ...	13-1, Old Court House Street	ditto
1110	Muirhead, James	...	Assistant, Graham & Co ...	9, Clive Street ...	ditto
1111	Munjee, F M	...	Partner, J Fleming & Co ...	173, Dhurrumtollah Street ..	ditto
1112	Munn, H R D	...	Assistant Local Secretary, North British and Mercantile Insurance Office.	100, Clive Street ...	ditto
1113	Munro, C	...	Assistant, Graham & Co ...	9, Clive Street ...	ditto
1114	Murch, W H	...	Assistant, Lawrence & Mayo ...	16, Old House Street ...	ditto
1115	Murphy, F N	...	Assistant Litho Printer, Surveyor-General's Office.	14, Wood Street ...	ditto
**1116	Murphy, S K	...	Superintendent, Home Department	Home Department ...	ditto
1117	Murphy, W J	...	Assistant, Mackintosh, Burn & Co ...	8, Esplanade, East ...	ditto
1118	Murray, Alex R	...	Assistant, Thomas Duff & Co, Ld ...	15, Clive Row ...	ditto
1119	Murray, H B	...	Accountant, British American Tobacco Co, Ld.	95, Clive Street ...	ditto
1120	Murray, J D	...	Acting Accountant, National Bank of India, Ld.	104, Clive Street ...	ditto
1121	Musgrove, A J	...	Draftsman, Surveyor-General's Office, Drawing Department.	13, Wood Street ...	ditto
1122	Musgrove, L H	...	Engraver, Engraving Department, Surveyor-General's Office.	13, Wood Street ...	ditto
1123	Mylne, A R	...	Official Reporter, Municipal Office ...	Municipal Office ...	ditto
1124	Mytton, H F	...	Assistant, James Arbuthnot & Co ...	3, Mangoe Lane ...	ditto
	N				
**1125	Nathaniel, H D	...	Clerk, Office of Accountant-General, P W D.	Imperial Secretariat Buildings	ditto
1126	Neathan, A P	...	Assistant, Francis, Harrison, Hathaway & Co.	13, Government Place, East ...	ditto

No.	Names	Style or Calling.	Residence or place of business.	Religion	Remarks.
	N				
1127	Nehemiah, T K	... Assistant, Mackinnon, Mackenzie & Co	16, Strand ...	Christian	
1128	Nelson, G P	... Partner, Meugens, King and Simson	102, Clive Street ...	ditto	
1129	Nelson, A S	... Draftsman, Surveyor-General's Office, Drawing Department.	13, Wood Street ...	ditto	
1130	Nesbitt, H K	... Assistant, Kilburn & Co ...	4, Fairlie Place ...	ditto	
1131	Newell, A F	... Assistant, John King & Co ...	40, Strand ...	ditto	
1132	Newland, W J	... Extra Assistant Superintendent, Drawing Department, Surveyor-General's Office.	13, Wood Street ...	ditto	
1133	Newman, H	... Assistant Editor, *Englishman* ...	9, Hare Street ...	ditto	
1134	Newman, J G	... Assistant, Ralli Brothers ..	1-2, Church Lane ...	ditto	
1135	Niccachi, M P	... Assistant, Ralli Brothers .	1-2, Church Lane ...	ditto	
1136	Nickels, E J	... Measurer, Bengal Chamber of Commerce.	2, Clive Street ...	ditto	
1137	Nickels, H G	... Measurer, Bengal Chamber of Commerce.	2, Clive Street ...	ditto	
1138	Nicoll, T	... Partner, King Brothers ...	102, Clive Street ...	ditto	
1139	Nicoll, T	... Manager, City Press ..	12, Bentinck Street ...	ditto	
**1140	Nile, E L	... Clerk, Foreign Office ...	Esplanade, West ...	ditto	
1141	Noad, P K	... Assistant, Jessop & Co, Ld ...	93, Clive Street ...	ditto	
1142	Noble, V A	... Assistant, Turner, Morrison & Co ...	6, Lyons Range ...	ditto	
1143	Nollar, A	... Assistant, G E Hotel Co, Ld ...	1, 2 & 3, Old Court House Street.	ditto	
1144	Noney, E A	... Assistant, Ernsthausen, Ld ..	9, Clive Row ...	ditto	
1145	Norman, F	... Assistant, J B Norton & Sons ...	1 & 2, Old Court House Corner	ditto	
1146	Norman, S F	... Sub-Assistant Superintendent, Drawing Department, Surveyor-General's Office.	13, Wood Street ..	ditto	
1147	Norton, H	... Assistant, Ralli Brothers ...	1-2, Church Lane ...	ditto	
1148	Norton, H B	... Partner, J B Norton and Sons ...	1-2, Old Court House Corner	ditto	
**1149	Nyss, C D	... 3rd class Senior Clerk, Upper Division, Office of Secretary to the Government of India, Military Department.	6, Esplanade, East ...	ditto	

1150	Oakley, E J	..	Assistant, Kilburn & Co	...	4, Fairlie Place	... ditto
1151	O'Brien, S C	...	Assistant, Hamilton & Co	...	8, Old Court House Street	... ditto
1152	O'Connell, G	...	Assistant Superintendent, Accountant-General's Office, Bengal.		The Treasury	... ditto
1153	Odgers, L	...	Assistant, H Clark & Co	...	5, Old Court House Street	... ditto
1154	O'Donoghue, J H	...	Assistant, Barry & Co	..	5, Lyons Range	... ditto
1155	Ogg, Jas D	...	Assistant, Thomas Duff & Co, Ld	...	15, Clive Row	... ditto
1156	Ogilvy, L W	...	Assistant Gillanders, Arbuthnot & Co		8, Clive Street	... ditto
1157	Olenbach, E C	...	Engraver, Engraving Department, Surveyor-General's Office.		13, Wood Street	... ditto
1158	Olphert, H E	...	Assistant, Blacker & Co	...	2, Clive Street	... ditto
1159	O'Malley, C R	...	Assistant, Allen Brothers & Co	...	1, New China Bazar Street	... ditto
1160	Ord, Knox G	...	Assistant, Petrocochino Brothers	...	4, Clive Ghât Street	... ditto
*,*1161	O'Reilly, J	...	3rd class Clerk, Secretariat, Government of India, Public Works Department.		Imperial Secretariat Buildings	ditto
1162	Orr, D	...	Assistant, Jessop & Co, Ld	..	93, Clive Street	... ditto
1163	Osgerby, W	...	Assistant Accountant, Bank of Calcutta, Ld.		7, Clive Row	... ditto
*,*1164	O'Sullivan, D	...	Junior 4th class Clerk, Lower Division, Office of Secretary to the Government of India, Military Department.		6, Esplanade, East	... ditto
1165	Ottewill, J	...	Manager, Harold & Co	...	3, Dalhousie Square	... ditto
1166	Otto, E C	...	4th class Assistant, Office of Controller of Military Accounts, E C, Supply and Transport Branch.		3, Kola Ghât Street	... ditto
*,*1167	Owen, E B	...	Accountant, Accountant-General's Office, P W D.		Imperial Secretariat Buildings	ditto
1168	Owen, M M	...	Assistant, W Newman & Co	...	4, Dalhousie Square	... ditto
	P					
1169	Page, C Percy	...	Assistant, British American Tobacco Co, Ld.		95, Clive Street	... ditto
1170	Paige, R H	...	Assistant, Whiteaway Laidlaw & Co		4, 5 & 6, Chowringhee	... ditto
*,*1171	Painter, J	...	Clerk, Foreign Office	...	Esplanade, West	... ditto
1172	Palmer, E W	...	Measurer, Licensed Measurers' Department, Bengal Chamber of Commerce.		2, Clive Street	... ditto

No.	Name	Style or Calling.	Residence or place of business.	Religion.	Remarks
	P				
1173	Palmer, H	... Managing Assistant, Rutledge & Co	1, Sandel Street ...	Christian	
1174	Palmer, H P	... Measurer, Licensed Measurers' Department, Bengal Chamber of Commerce.	2, Clive Street ..	ditto	
1175	Panioty, N	... Assistant, Ralli Brothers ..	1-2, Church Lane ...	ditto	
1176	Papagheeka, M	... Assistant, Macfie and Macdonald ...	13-1, Old Court House Street	ditto	
1177	Parker, J F	... Assistant, Thacker, Spink & Co ...	5, Government Place ...	ditto	
1178	Parkinson, R	... Sub-Editor, *Englishman* Office ...	9, Hare Street ...	ditto	
1179	Parkman, A E	... Partner, H Clark & Co ...	5, Old Court House Street ...	ditto	
1180	Parr, G	... Assistant, Francis, Harrison, Hathaway & Co.	13, Government Place, East...	ditto	
1181	Parrott, P	... Assistant, Kilburn & Co ...	4, Fairlie Place ...	ditto	
1182	Parry, T D	... Engineer, Kilburn & Co ...	4, Fairlie Place ...	ditto	
1183	Parsons, D	... Assistant, J Thomas & Co ...	8, Mission Row ...	ditto	
1184	Parsons, D J	... Assistant, Moran & Co ...	3, Mangoe Lane .	ditto	
1185	Parsons, E	... Assistant, Office of Secretary to the Government of India, Finance and Commerce Department.	Treasury Buildings ...	ditto	
1186	Parton, H H	... Assistant, Army & Navy Co-operative Society, Ld.	41, Chowringhee ...	ditto	
1187	Parton, H H	... Assistant, Hall & Anderson ...	31, Chowringhee ...	ditto	
1188	Pascal, Edward Howard	... Head Assistant, Bengal Secretariat, Municipal Department.	Writers' Buildings ...	ditto	
1189	Patrick, J	... Assistant, O Steel & Co ...	14, Old Court House Street ...	ditto	
1190	Patterson, C C	... Assistant, Becker, Gray & Co ...	7, Hastings Street ...	ditto	
1191	Pattinson, J H	... Assistant, The Arracan Co, Ld ...	28, Dalhousie Square ...	ditto	
1192	Paul, H M	... Inspector, Licensed Measurers' Department, Bengal Chamber of Commerce.	2, Clive Street ...	ditto	
1193	Paul, J C	... Clerk, Office of Accountant-General, Public Works Department.	Imperial Secretariat Buildings	ditto	
1194	Paxton, P E	... Clerk, Foreign Office ...	Esplanade, West ...	ditto	
1195	Pearce, A W	... Assistant, W Leslie & Co ...	2, Chowringhee ...	ditto	
1196	Pearce, C M	... Coal Manager, Traffic Department, E I R.	E I R House ...	ditto	
1197	Peat, H M	... Assistant, Bird & Co ...	101-1, Clive Street ...	ditto	
1198	Pegler, E H	... Assistant Manager, Eastern Landing, Clearing and Forwarding Co.	7, Dalhousie Square ...	ditto	

1199	Peirce, A	...	Assistant Engineer, Water-Works, Municipal Office.	5, Corporation Street ...	ditto
1200	Peirson, H N	...	Assistant, Kettlewell, Bullen & Co ...	21, Strand ...	ditto
1201	Pell, T O	...	Deputy Accountant, Calcutta Mint ...	47, Strand Road, North ...	ditto
1202	Pennycuick, R J	...	Assistant, Whiteaway, Laidlaw & Co	4, 5 & 6, Chowringhee Road	ditto
1203	Penrose, W H	...	Extra Assistant Superintendent, Surveyor-General's Office, Drawing Department.	13, Wood Street ...	ditto
1204	Penstone, G W	...	Assistant, Ralli Brothers ...	1 & 2, Church Lane ...	ditto
1205	Pereira, A E	...	Pipe layer, District Engineer's Office, District No. I, Municipal Office.	79, Cornwallis Street ...	ditto
1206	Pereira, C	...	Assistant Superintendent, Office of the Calcutta Port Commissioners.	Strand Road ...	ditto
1207	Pereira, E J H	...	Jr. 4th class Clerk, Lower Division, Office of Secretary to the Government of India, Military Department.	6, Esplanade, East ...	ditto
1208	Pereira, S	...	Assistant, Office of Secretary to the Government of India, Finance and Commerce Departments.	Treasury Buildings ...	ditto
1209	Pereira, W A	...	Measurer, Licensed Measurers' Department, Bengal Chamber of Commerce.	2, Clive Street ...	ditto
1210	Perris, S A	...	Assistant, E D Sassoon & Co ...	2 & 3, Clive Row ...	Hebrew
1211	Petrocochino, E S	...	Assistant, Petrocochino Brothers ...	4, Clive Ghât Street ...	Christian
1212	Pereira, O S	...	Superintendent, Comptroller-Generals Office.	The Treasury ...	ditto
1213	Phelps, S G	...	Assistant, Phelps & Co ...	15, Old Court House Street ...	ditto
1214	Phillipowsky, C E	...	Assistant, Ralli Brothers ...	1-2, Church Lane ...	ditto
1215	Phillips, A W	...	Assistant, Thos. Cook & Son ...	9, Old Court House Street ...	ditto
1216	Phillips, F E	...	Assistant, Turner, Morrison & Co ...	6, Lyons Range ...	ditto
1217	Phillips, H	...	Assistant, Francis, Harrison, Hathaway & Co.	13, Government Place, East ...	ditto
1218	Phillips, H A	...	Assistant Secretary, G E Hotel Co, Ld.	1, 2 & 3, Old Court House Street.	ditto
1219	Phillips, R A	...	Assistant, G E Hotel Co, Ld ...	1, 2 & 3, Old Court House Street.	ditto

No.	Names.	Style or Calling.	Residence or place of business.	Religion.	Remarks.
	P				
1220	Picachy, D	... Assistant Superintendent, Accountant-General's Office, Bengal.	The Treasury ...	Christian.	
1221	Picachy, J	... Accountant, Office of Protector of Emigrants and Superintendent of Emigration.	55, Chowringhee Road ...	ditto	
1222	Pickford, C E	... Assistant, Barlow & Co ...	37, Strand Road ...	ditto	
1223	Pickford, G	... Assistant, Begg, Dunlop & Co ...	12, Mission Row ...	ditto	
*1224	Pigott, W C	... 4th class Clerk, Secretariat, Government of India, P W Dept.	Imperial Secretariat Buildings	ditto	
1225	Pike, H B	... Sub-Accountant, Hongkong & Shanghai Banking Corporation.	31, Dalhousie Square ...	ditto	
1226	Pilley, A E	... Assistant Copperplate Printer & Store-keeper, Engraving Department, Surveyor-General's Office.	13, Wood Street ...	ditto	
*1227	Piner, J	... Clerk, Foreign Office ...	Esplanade, West ...	ditto	
1228	Pires, W	... Assistant, James Murray & Co ...	12, Government Place ...	ditto	
*1229	Pittar, A H	... Assistant, Office of Secretary to the Government of India, Revenue and Agricultural Department, Revenue Branch.	Imperial Secretariat Buildings	ditto	
1230	Pittar, H C W	... Assistant, Ernsthausen, Ld ...	9, Clive Row ...	ditto	
1231	Platnauer, S L	... Partner, Simpson and Platnauer ...	29, Bentinck Street ...	Jew	
1232	Playfair, G F	... Assistant, Grindlay & Co ...	11, Hastings Street ...	Christian	
1233	Plummer, E T	... Assistant, George Henderson & Co ...	100, Clive Street ...	ditto	
1234	Pogose, P M	.. Travelling Auditor, Office of the Calcutta Port Commissioners.	Strand Road ...	ditto	
1235	Ponting, H	... Assistant, Phelps & Co ...	15, Old Court House Street ...	ditto	
1236	Pooler, H G	... Assistant, F & C Osler ...	12, Old Court House Street	ditto	
1237	Pope, C M	... Assistant, Shaw, Wallace & Co ...	20, Strand Road ...	ditto	
*1238	Pope, E J	... 2nd class Clerk, Secretariat, Government of India, P W D.	Imperial Secretariat Buildings	ditto	

1239	Popham, G A	...	Head Assistant, Office of the Superintending Engineer, Central Circle.	Writers' Buildings	...	ditto
1240	Porter, W T	...	Accountant, P W D, Office of Government Examiner of Railway Accounts.	E I R House	...	ditto
**1241	Potenger, G E	...	Clerk, Foreign Office ...	Esplanade, West	...	ditto
1242	Potnoy, S	...	Proprietor, Cosmopolitan Hotel ...	39, Bentinck Street	...	Jew
1243	Potter, L R	...	Teacher, LaMartiniére College ...	11, Loudon Street	...	Christian
1244	Powell, E	...	Measurer, Licensed Measurers' Department, Bengal Chamber of Commerce.	2, Clive Street	...	ditto
**1245	Powell, T	...	Clerk, Foreign Office ...	Esplanade, West	...	ditto
1246	Powell, W H	...	Assistant, Jessop & Co, Ld. ...	93, Clive Street	...	ditto
1247	Pratt, C H	...	Assistant, Hamilton & Co ...	8, Old Court House Street	...	ditto
1248	Presswell, H E	...	Claims Clerk, Traffic Department, E I R.	E I R House	...	ditto
1249	Presswell, T G	...	Offg. Chief Clerk, Traffic Manager's Office, E I R.	E I R House	...	ditto
1250	Price, A A	...	Personal Assistant to the Inspector-General of Civil Hospitals and Sanitary Commissioner for Bengal.	Writers' Buildings	...	ditto
1251	Price, C F	...	Assistant, Turner, Morrison & Co. ...	6, Lyon's Range	...	ditto
1252	Price, F G	...	Assistant, A and J Main & Co, Ld ...	31, Dalhousie Square	...	ditto
**1253	Price, J H	...	Assistant, Bengal Secretariat, Judicial, Political and Appointment Departments.	Writers' Buildings	...	ditto
1254	Pritchard, P H	...	Accountant, Delhi and London Bank, Ld.	4, Council House Street	...	ditto
1255	Proctor, A	...	Assistant, Whiteaway, Laidlaw & Co	4, 5 and 6, Chowringhee	...	ditto
1256	Prowling, A	...	Assistant, W Leslie & Co ...	2, Chowringhee	...	ditto
1257	Pryce, O H D	...	Time-Table Clerk, Chief Superintendent's Office, E I R.	E I R. House	...	ditto
1258	Pugh, R A C	...	Assistant, Norman Brothers ...	32, Dalhousie Square, South		ditto

No	Names.	Style or Calling.	Residence or place of business	Religion.	Remarks.
	P				
1259	Pym, D	... Assistant, Williamson, Magor & Co ...	4, Mangoe Lane ...	Christian	
*1260	Pyster, C E	... Superintendent, Foreign Office ...	Esplanade, West ...	ditto	
1261	Pyne, C A B	... Assistant, Balmer, Lawrie & Co ...	103, Clive Street ...	ditto	
	Q				
1262	Quantin, D J	... Measurer, Licensed Measurers' Department, Bengal Chamber of Commerce.	2, Clive Street ...	ditto	
1263	Quarmby, T W T	... Assistant, Balmer, Lawrie & Co ...	103, Clive Street ...	ditto	
	R				
1264	Rackham, J E	... Draper, Hall and Anderson ...	31, Chowringhee ...	ditto	
1265	Rae, H B	... Education Department, Presidency College.	College Square ...	ditto	
1266	Rae, H P M	... Assistant, Bombay Company, Ld ...	7—1, Lyons Range ...	ditto	
*1267	Raeburn, H C	... Accountant, Accountant-General's Office, P W D.	Imperial Secretariat Buildings	ditto	
1268	Ralli, A C	... Assistant, Ralli Brothers ...	1 & 2, Church Lane ...	ditto	
*1269	Ramsay, J	... 6th class Clerk, Secretariat, Government of India, P W D.	Imperial Secretariat Buildings	ditto	
1270	Rance, J	... Assistant, Jessop & Co, Ld ...	93, Clive Street ...	ditto	
1271	Raphael, J H	... Sub-Manager, *Statesman* Office ...	3, Chowringhee ...	ditto	
1272	Ratcliffe, S K	... Editor, *Statesman* Office ...	3, Chowringhee ...	ditto	
1273	Ravenscroft, S U	... Assistant, Litho. Branch, Surveyor-General's Office.	14, Wood Street ...	ditto	
1274	Rayner, F S	... Assistant, Turner, Morrison & Co ...	6, Lyons Range ...	ditto	
*1275	Reaks, R R	... Clerk, Home Department ...	Home Department ...	ditto	
1276	Rean, H	... Assistant, Balmer, Lawrie & Co ...	103, Clive Street ...	ditto	
1277	Rebeiro, E J	... Assistant, Superintendent, Accountant-General's Office, Bengal	The Treasury ...	ditto	

1278	Rebeiro, G	...	Examiner, Office of Superintendent, Government Printing, India.	8, Hastings Street ...	ditto
1279	Rebello, G V	..	Accountant, Office of Controller of Military Accounts, E C, Accounts Branch.	Military Accounts Department Buildings, 3, Koila Ghat Street.	ditto
1280	Rees, W S	...	Assistant, Traill & Co ...	20, British Indian Street ...	ditto
1281	Reid, J	...	Sub-Accountant, Chartered Bank of India, Australia and China.	5, Council House Street ...	ditto
1232	Remedios, H	...	Examiner, Govt. Printing, India ...	8, Hastings Street ...	ditto
1283	Rennison, C	...	Assistant, Williamson, Magor & Co...	4, Mangoe Lane ...	ditto
1284	Renton, J D	...	Assistant, Ralli Brothers ..	1 & 2, Church Lane ...	ditto
1285	Reynell, B	...	Assistant, Graham & Co ...	9, Clive Street ...	ditto
1286	Reynolds, W F	...	Assistant, Macneill & Co ...	2, Clive Ghat Street ...	ditto
1287	Reynolds, W J	...	Assistant, G E Hotel Co, Ld ...	1, 2 & 3, Old Court House Street.	ditto
1288	Rhodes, C W	...	Assistant, Hoare, Miller & Co ...	38, Strand ...	ditto
1289	Ribeiro, T W	...	Assistant, Mackintosh, Burn & Co ...	8, Esplanade, East ...	ditto
1290	Rich, E R (Jr.)	...	General Assistant, Standard Oil Company of New York.	8, Dalhousie Square, East ...	ditto
1291	Richards, R A	...	Assistant Accountant, Bank of Bengal	Strand ...	ditto
1292	Richardson, R G	...	Superintendent, Office of Secretary to the Government of India, Revenue and Agricultural Department, Patents Branch.	Imperial Secretariat Buildings	ditto
1293	Ridge, G R	...	Assistant, Office of Secretary to the Government of India, Legislative Department.	Legislative Department Office, 5, Esplanade, West.	ditto
1294	Ridley, H B	...	Assistant, South British Fire and Marine Insurance Co.	1, Lall Bazar Street ...	ditto
1295	Rigordy, Carlisle	...	Assistant, Ernsthausen, Ld ...	9, Clive Row ...	ditto
1296	Rivaz, C W	...	Assistant, Anderson, Wright & Co...	22, Strand Road ...	ditto
1297	Roberts, B O	...	Assistant, Becker, Gray & Co ...	7, Hastings Street ...	ditto
1298	Roberts, J E	...	Joint Railway Foreman, Office of the Calcutta Port Commissioners.	Strand Road ...	ditto
1299	Robertson, E J	...	Check Officer, Office of the Calcutta Port Commissioners.	Strand Road ...	ditto
300	Robertson, F E	...	Assistant Superintendent, Traffic Department, E I R.	E I R House ...	ditto

No.	Names.	Style or Calling.	Residence or place of business.	Religion.	Remarks
	R				
1301	Robertson, Jas	... Assistant, Thomas Duff & Co, Ld ...	15, Clive Row ...	Christian	
1302	Robertson, J A	... Superintendent, Government of India, Statistical Department.	7, Koila Ghat Street ...	ditto	
1303	Robertson, T	... Assistant, Lardner & Co ...	4, Commercial Buildings ...	ditto	
1304	Robins, F J	... Passing Officer, Bank of Bengal ...	Strand ...	ditto	
1305	Robinson, E S	... Hackney Carriage Inspector, Calcutta Corporation.	Municipal Office ...	ditto	
1306	Robinson, J E	... Head Reader, Caledonian Steam Printing Works.	3, Wellesley Place ...	ditto	
1307	Robson, J	... Engineer, Presidency Jail Press ...	Presidency Jail Press ...	ditto	
1308	Robson, Herbert	... General Manager, D T Keymer & Co	1-1, Council House Street ...	ditto	
1309	Robson, W	... Assistant, Reuter's Telegram Co, Ld	102, Clive Street ...	ditto	
1310	Rodgers, J R	... Assistant, Jessop & Co, Ld ...	93, Clive Street ...	ditto	
*1311	Rodgers, J R	... Clerk, Foreign Office ...	Esplanade, West ...	ditto	
1312	Rodrigues, A J	... Assistant Litho. Printer, Surveyor-General's Office.	14, Wood Street ...	ditto	
*1313	Rodrigues, C A	... 6th class Senior Clerk, Upper Division, Office of Secretary to the Government of India, Military Department.	6, Esplanade, East ...	ditto	
1314	Rodrigues, J A	... 2nd class Assistant, Office of Controller of Military Accounts, E C, Supply and Transport Branch.	?, Koila Ghat Street ...	ditto	
1315	Rodrigues, J C	... Assistant, Manton & Co ...	13, Old Court House Street ...	ditto	
1316	Rodrigues, M P	.. Type-writer, Grindlay & Co ...	11, Hastings Street ...	ditto	
1317	Rodrigues, N J	... Assistant, Catholic Orphan Press ...	4, Portuguese Church Street ...	ditto	
1318	Rogers, A D	... Inspector, Licensed Measurers' Department, Bengal Chamber of Commerce.	2, Clive Street ...	ditto	
1319	Rogers, C B	... Assistant, Government of India, Statistical Department.	7, Koila Ghat Street ...	ditto	
*1320	Rogers, H	... Clerk, Foreign Office ...	Esplanade, West, ...	ditto	
*1321	Rogers, H J	... 5th class Clerk, Secretariat, Government of India, Public Works Department.	Imperial Secretariat Buildings	ditto	

1322	Ronald, P	...	Assistant, Lovelock and Lewes	...	25, Mangoe Lane	... ditto
1323	Rondeau, E C	...	Clerk, Foreign Office	...	Esplanade, West	... ditto
1324	Rope, E E	...	Assistant, Kilburn & Co	...	4, Fairlie Place	... ditto
1325	Rose, B A	...	Assistant, Thacker, Spink & Co	...	5, Government Place	... ditto
1326	Roseboom, G J	...	Assistant, G E Hotel Co, Ld	...	1, 2 & 3, Old Court House Street	ditto
1327	Ross, C	...	5th class Senior Clerk, Upper Division, Office of Secretary to the Government of India, Military Department.		6, Esplanade, East	... ditto
1328	Ross, G Hunt	...	Temporary Engineer, 1st Calcutta Division, P W D.		Writers' Buildings	... ditto
1329	Ross, J	...	Assistant, Mason, Hill & Rogers	...	19, Chowringhee	... ditto
1330	Ross, N M	...	Assistant, McLeod & Co	...	31, Dalhousie Square	... ditto
1331	Ross, T A	...	Manager, W H Harton & Co	...	30, Strand Road	... ditto
1332	Ross, W	...	Assistant, Whiteaway, Laidlaw & Co		4, 5 & 6, Chowringhee	... ditto
1333	Rostan, C	...	Clerk, Comptroller-General's Office	...	The Treasury	... ditto
1334	Rothera, G H	...	Chartered Accountant, Martin & Co		Jackson House	... ditto
1335	Rouband, C E	...	Assistant, Marshall, Sons & Co, Ld	...	99, Clive Street	... ditto
1336	Rourke, G	...	Proprietor, A Hartman & Co	...	159 & 160, Dhurrumtollah Street.	ditto
1337	Rowcliffe, R H	...	Chief Accountant, Municipal Office	...	Municipal Office	... ditto
1338	Rowe, E A	...	Assistant, Morrison and Cottle	...	2, Esplanade Row, East	... ditto
1339	Roxby, H M	...	Assistant, Barlow & Co	...	37, Strand Road	... ditto
1340	Rozario, W S D	...	Examiner, Government Printing, India.		166, Dhurrumtollah Street	... ditto
1341	Rundlett, E A	...	Head Clerk, Surveyor-General's Office, Correspondence Branch.		13, Wood Street	... ditto
1342	Rundlett, J H	...	Assistant to General Traffic Manager, E I R.		E I R House	... ditto
1343	Rushton, G O	...	Assistant, Ralli Brothers	...	1 & 2, Church Lane	... ditto
1344	Russell, E C	...	Ditto	...	Ditto	... ditto
1345	Rutherford, A	...	Assistant, Mason, Hill & Rogers	...	19, Chowringhee	... ditto
1346	Rutledge, D B	...	2nd class Senior Clerk, Upper Division, Office of Secretary to the Government of India, Military Department.		6, Esplanade, East	... ditto
1347	Ryan, M	...	Assistant Traffic Manager, E I R	...	E I R House	... ditto

No.	Names.	Style or Calling.	Residence or place of business.	Religion.	Remarks.
	R				
1348	Rymer, C O W	... Accountant, Bank of Calcutta, Ld ...	7, Clive Row ...	Christian	
1349	Rymer, L F	... Assistant Accountant, Alliance Bank of Simla, Ld.	8, Council House Street ...	ditto	
	S				
1350	Sampson, W	... Assistant, W Leslie & Co ...	2, Chowringhee ...	ditto	
*1351	Sanderson, R W	... Superintendent, Foreign Department	Esplanade, West ...	ditto	
*1352	Sanderson, W E K	... 4th class Senior Clerk, Upper Division, Office of Secretary to the Government of India, Military Department.	6, Esplanade, East ...	ditto	
1353	Sandford, C W	... Chief Superintendent, Accountant-General's Office, Bengal.	The Treasury ...	ditto	
1354	Sandwell, W R	... Chief Clerk, Chief Superintendent's Office, Traffic Department, E I R.	E I R House ...	ditto	
1355	Saner, E J	... Engineer, Kilburn & Co ...	4, Fairlie Place ...	ditto	
1356	Sansoni, G L	... Assistant, Cosmopolitan Hotel ...	39, Bentinck Street ...	ditto	
1357	Sarkies, W A	... 3rd class Assistant, Office of Controller of Military Accounts, E C, Supply and Transport Branch.	3, Koila Ghat Street ...	ditto	
1358	Sassoon, A N	... Assistant, E D Sassoon & Co ...	2 & 3, Clive Row ...	Hebrew	
1359	Saubolle, L V	... Assistant, Balmer, Lawrie & Co ...	103, Clive Street ...	Christian	
1360	Saul, I S	... Assistant, David Sassoon & Co, Ld ...	3, Fairlie Place ...	Jew	
1361	Saunders, C	... Assistant, Ralli Brothers ...	1 & 2, Church Lane ...	Christian	
1362	Saunders, E J	... Assistant, Martin & Co ...	Jackson House ...	ditto	
1363	Saunders, W	... Assistant, Mason, Hill & Rogers ...	19, Chowringhee ...	ditto	
1364	Sawyer, E J	... Assistant, Hall & Anderson ...	31, Chowringhee ...	ditto	
1365	Scallan, F R C	... Engraver, Engraving Department, Surveyor-General's Office.	13, Wood Street ...	ditto	
1366	Scaramanga, P A	... Assistant, Ralli Brothers ...	1 & 2, Church Lane ...	ditto	
1367	Schaumburg, J L	... Assistant, Pelican and British Empire Life Office.	12, Dalhousie Square ...	ditto	

1368	Schiller, F	...	Assistant, Hall & Anderson	...	31, Chowringhee	... ditto
*1369	Schofield, F W	...	Clerk, Home Department	...	Home Department	... ditto
1370	Schumacher, G A	..	Assistant, Bird & Co	...	101-1, Clive Street	... ditto
1371	Scotney, F J	...	Assistant, Army and Navy Co-Operative Society, Ld.		41, Chowringhee	... ditto
1372	Scott, A	...	Assistant, Mackinnon, Mackenzie & Co		16, Stand	... ditto
1373	Scott, J	...	District Traffic Manager, Office of the Calcutta Port Commissioners.		Strand Road	... ditto
*1374	Scott, R C	...	Assistant, Office of Secretary to the Government of India, Revenue and Agricultural Department, Forest Branch.		Imperial Secretariat Buildings	ditto
1375	Scutt, G P S	...	Personal Assistant to Secretary, Bank of Bengal.		Strand	... ditto
1376	Seaman, W C	...	Assisant, Standard Life Assurance Co.		32, Dalhousie Square	... ditto
1377	Sebright, C	...	Assistant, Dykes & Co	...	29, Waterloo Street	... ditto
1378	Selfe, P A	...	Superintendent, Government Account Department, Bank of Bengal.		Strand	... ditto
1379	Selkirk, A	...	Assistant Accountant, Alliance Bank of Simla, Ld.		8, Council House Street	... ditto
1380	Severs, B	...	Assistant Auditor, E I R	...	E I R House	... ditto
*1381	Shapcott, J D	...	Superintendent, Office of Secretary to the Government of India, Department of Revenue and Agriculture, Agriculture Branch.		Imperial Secretariat Buildings	ditto
1382	Sharp, W	...	Assistant, A and J Main & Co, Ld	...	31, Dalhousie Square	.. ditto
1383	Sharpe, F J	...	Assistant, J Monteith & Co	...	21, Old Court House Street	.. ditto
1384	Sharpe, V R	...	Assistant, Grindlay & Co	...	11, Hastings Street	... ditto
1385	Shavier, C	...	Assistant Master, Calcutta Free School.		58, Free School Street	... ditto
1386	Shea, W	...	Reader, Bengal Secretariat Press	...	Writers' Buildings	... ditto

No.	Names.	Style or Calling.	Residence or place of business.	Religion.	Remarks
	S.				
1387	Shepherd, W S W	... 2nd grade Assistant Examiner, Office of Controller of Military Accounts, E.	3, Koila Ghat Street ...	Christian	
1388	Sherman, H M	... Assistant, Turner, Morrison & Co ...	6, Lyons Range ...	ditto	
1389	Sherman, V	... Assistant, Bank of Calcutta, Ld. ...	7, Clive Row ...	ditto	
1390	Shields, H F	... Assistant, Office of Secretary to the Government of India, Finance and Commerce Department.	Treasury Buildings ...	ditto	
1391	Shields, J	... Assistant, James Murray & Co ...	12, Government Place ...	ditto	
*1392	Shilstone, W A	... 3rd Class Clerk, Secretariat, Government of India, P. W. D.	Imperial Secretariat Buildings	ditto	
1393	Short, F M	... Assistant, Balmer, Lawrie & Co ...	103, Clive Street ...	ditto	
1394	Siddle, C J R	... Establishment Clerk to T M, Office of the Calcutta Port Commissioners.	Strand Road ...	ditto	
1395	Siddons, G	... Engineer, Walter Locke & Co, Ld ..	4, Esplanade ...	ditto	
1396	Siddons, J B	... Chief Superintendent, Excise Preventive Establishment, Calcutta Collectorate.	3, Charnock Place ...	ditto	
1397	Sidey, G L	... Assistant, O Steel & Co ...	14, Old Court House Street ...	ditto	
1398	Sim, J D Keith	.. Assistant, Commercial Union Assurance Co, Ld.	29, Dalhousie Square ...	ditto	
1399	Simmons, J F	... Assistant, F W Heilgers & Co ...	136, Canning Street ...	ditto	
1400	Simpson, A B	... Assistant, Graham & Co ...	9, Clive Street ...	ditto	
1401	Simpson, H J	... Assistant, Shaw, Wallace & Co ...	20, Strand Road ...	ditto	
1402	Simpson, H J	... Assistant, Shrager Brothers ...	28, Dalhousie Square ...	ditto	
1403	Simpson, J W A	... Assistant, F W Heilgers & Co ...	136, Canning Street ..	ditto	
1404	Simpson, R	... Assistant, Board of Revenue, L. P....	2, Bankshall Street ...	ditto	
1405	Simpson, W N	... Assistant Turner, Morrison & Co ...	6, Lyons Range ...	ditto	
*1406	Smaes, M J	... Assistant Examiner, Accountant-General's Office, Public Works Department.	Imperial Secretariat Buildings	ditto	

1407	Sinclair, W L	...	Assistant, Davis Leech & Co	...	11, Government Place	... ditto
1408	Sinclair, W T	...	Assistant, Bathgate & Co	...	19, Old Court House Street	... ditto
1409	Siret, E B	...	Assistant, Bengal Secretariat, Public Works Department.		Writers' Buildings	... ditto
1410	Skinner, H E	...	Assistant, Jessop & Co, Ld	...	93, Clive Street	... ditto
1411	Skippers, J	...	Assistant Manager, Walter Locke & Co, Ld.		4, Esplanade	... ditto
1412	Skipwith, A R	...	Assistant Manager, Brooke, Bond & Co., Ld.		5-1, Council House Street	... ditto
1413	Slator, E J	...	Assistant, Francis, Harrison, Hathaway & Co.		13, Government Place, East	ditto
1414	Small, Geo	...	Assistant, Graham & Co	...	9, Clive Street	... ditto
1415	Smallwood, C L	...	Assistant, W Haworth & Co	...	1, Mission Row	... ditto
1416	Smallwood, E	...	Assistant, Landale and Morgan	...	5, Mission Row	... ditto
1417	Smart, A B	...	Extra Assistant Superintendent, Surveyor-General's Office, Drawing Department.		13, Wood Street	... ditto
1418	Smiles, J T	...	Assistant, Mackinnon, Mackenzie & Co.		16, Strand	... ditto
1419	Smith, A	...	Assistant, Dykes & Co	....	29, Waterloo Street	... ditto
1420	Smith, A E	...	Assistant, Macneill & Co	...	2, Clive Ghat Street	... ditto
1421	Smith, A J	...	Assistant, Whiteaway, Laidlaw & Co		4, 5 & 6, Chowringhee	... ditto
1422	Smith, A V	...	Stationery Store Examiner, Stamp and Stationery Office.		4 & 5, Church Lane	... ditto
1423	Smith, F	...	Assistant Superintendent. Office of the Calcutta Port Commissioners.		Strand Road	... ditto
1424	Smith, Fred. B	...	Principal, Calcutta Boys' School	...	72, Corporation Street	... ditto
1425	Smith, F B	...	Draper, Hall & Anderson	...	31, Chowringhee	... ditto
1426	Smith, F S	...	Draper, Hall & Anderson	...	31, Chowringhee	... ditto
1427	Smith, H E	...	Sub-Accountant, Chartered Bank of India, Australia & China.		5, Council House Street	... ditto
1428	Smith, H J T	...	Assistant Engineer, Calcutta Water-Works.		5, Corporation Street	... ditto
1429	Smith, J	...	Assistant, Macneill & Co	...	2, Clive Ghat Street	... ditto

No.	Names	Style or Calling.	Residence or place of business	Religion	Remarks.
	S				
1430	Smith, J B	... Assistant, Fraser & Co ...	4, Commercial Buildings ...	Christian	
1431	Smith, L W	... Assistant, Mackinnon, Mackenzie & Co	16, Strand ...	ditto	
**1432	Smith, M	... Clerk, Foreign Office ...	Esplanade, West ...	ditto	
1433	Smith, N	... Assistant, Standard Oil Co of New York.	8, Dalhousie Square, East ...	ditto	
1434	Smith, R	... Assistant, Jessop & Co, Ld ...	93, Clive Street ...	ditto	
1435	Smith, R N	... Assistant, Ahmuty & Co ..	6, Church Lane ...	ditto	
1436	Smith, S B	... Assistant Accountant, Mercantile Bank of India, Ld.	28, Dalhousie Square ...	ditto	
1437	Smith, T G	... Manager, Jhon Dewar & Sons, Ld ...	10, Hare Street ...	ditto	
**1438	Smith, T M	... Clerk, Home Department ...	Home Department ...	ditto	
1439	Smith, William	... Managing Partner, Hamilton & Co...	8, Old Court House Street ...	ditto	
1440	Smith, W R	... Assistant, Bird & Co ..	101-1, Clive Street ...	ditto	
1441	Smyth, E P	... Assistant, Atkinson Brothers, Ld ...	13, Chowringhee ...	ditto	
1442	Smyth, R M W	... Assistant, Turner, Morrison & Co ...	6, Lyons Range ...	ditto	
1443	Snaith, J F	... Assistant, Hamilton & Co ...	8, Old Court House Street ...	ditto	
1444	Solomon, H E	... Partner, Hilali Brothers & Co ...	18, China Bazar Lane ...	Jew	
1445	Solomon, J F	... Measurer, Licensed Measurers Department, Bengal Chamber of Commerce.	2, Clive Street ...	Christian	
1446	Solomon, M E	... Partner, Hilali Brothers & Co ...	18, China Bazar Lane ...	Jew	
1447	Solomon, S E	... Ditto ...	Ditto ...	do	
1448	Somers, F K	... Stock Broker, Windram & Co ...	106, New China Bazar Street	Christian	
1449	Somerville, Percy	... Teacher, Calcutta Boys' School ...	72, Corporation Street ...	ditto	
1450	Sowerby, W C	... Assistant, Turner, Morrison & Co ..	6, Lyons Range ...	ditto	

1451	Spalding, C L	...	Assistant Accountant, International Banking Corporation.	27, Dalhousie Square	...	ditto
1452	Spalding, W	...	Assistant, Whiteaway, Laidlaw & Co	4, 5 & 6, Chowringhee	...	ditto
1453	Spearing, R	...	Traveller, Lemon, Blake & Co ...	3-1, Wellesley Place	...	ditto
1454	Spencer, J G	...	Head Conductor, Office of the Agent for Government Consignments.	5, Strand Road	...	ditto
1455	Spooner, H B	...	Assistant, Cook & Co ...	Dhurrumtollah Street	...	ditto
1456	Stafford Jas	...	Assistant, A Milton & Co ...	156, Dhurrumtollah Street	...	ditto
1457	Stansbury, V	...	Assistant, J Mackillican & Co ...	7, Church Lane	...	ditto
1458	Staples, W	...	Assistant, Ralli Brothers ...	1 & 2, Church Lane	...	ditto
*.*1459	Stapleton, A	...	Superintendent, Foreign Office ...	Esplanade, West	...	ditto
*.*1460	Stark, J T R	...	2nd Class Clerk, Secretariat, Government of India, Public Works Department.	Imperial Secretariat Buildings		ditto
*.*1461	Stark, W E	...	Junior 1st Class Clerk, Lower Division, Office of Secretary to the Government of India, Military Department.	6, Esplanade, East	...	ditto
1462	Statham, I	...	Assistant, Great Eastern Hotel Co, Ld	1, 2 & 3, Old Court House Street.		ditto
1463	Stavride, C J	...	Assistant, Ralli Brothers ...	1 & 2, Church Lane	...	ditto
1464	Steadman, W	...	Assistant, Marshall Sons & Co, Ld ..	99, Clive Street	...	ditto
1465	Steenstrand, G	...	Assistant Secretary, Royal Insurance Co.	26-7, Dalhousie Square	...	ditto
1466	Stephen, S P	...	Assistant, Shaw, Wallace & Co ...	20, Strand Road	...	ditto
1467	Stephens, J	...	Assistant, Apcar & Co ...	19, Radha Bazar Street	...	ditto
1468	Sterling, E		Accountant, 1st grade, Military Accounts Department, Ordnance and Clothing Branches	Military Accounts Department Buildings, Koila Ghat Street.		ditto
1469	Steuart, C W	...	Measurer, Licensed Measurers' Department, Bengal Chamber of Commerce.	2, Clive Street	...	ditto
1470	Stevenson, H L	...	Assistant, J Thomas & Co ...	8, Mission Row	...	ditto
1471	Stevenson, W G	...	ditto ...	ditto	...	ditto

No.	Names.	Style or Calling.	Residence or place of business.	Religion.	Remarks.
	S				
1472	Stewart, A H	... Partner, Halford, Smith & Co	... 1, Mission Row ...	Christian	
1473	Stewart, A M	... Manager, B Rigold & Bergmann	... 142, Radha Bazar Street ...	ditto	
1474	Stewart, A P	... Assistant, Graham & Co	... 9, Clive Street ...	ditto	
1475	Stewart, D M	... Assistant, Ranken & Co	... 4, Old Court House Street ...	ditto	
1476	Stewart, F H	... Assistant, Gladstone, Wyllie & Co	... 101, Clive Street ...	ditto	
1477	Stewart, J	... Assistant, Atkinson Brothers, Ld	... 13, Chowringhee ...	ditto	
1478	Stewart, J C	... Assistant, Finlay, Muir & Co	... 1, Clive Street ...	ditto	
1479	Stewart, R	... Draper, Hall and Anderson	... 31, Chowringhee ...	ditto	
1480	Stimson, W H	... Assistant, Whiteaway, Laidlaw & Co	4, 5 & 6, Chowringhee ...	ditto	
1481	Stokes, A B	... Teacher, La Martinière College	... 11, Loudon Street ...	ditto	
1482	Stoner, C	... Assistant, G E Hotel Co, Ld	... 1, 2 & 3, Old Court House Street	ditto	
1483	Stranack, F D	... Inspector of Branches, Commercial Bank of India, Ld.	5-1, Fairlie Place ...	ditto	
1484	Stratton, J G	... Mechanic Typewriter, A P Stockwell & Co.	14-2, Sudder Street ...	ditto	
1485	Street, H S	... Assistant, F & C Osler	... 12, Old Court House Street...	ditto	
1486	Stride, W	... Assistant, Harman & Co	... 12, Government Place ...	ditto	
1487	Stuart, C H	... Assistant Accountant, Delhi and London Bank, Ld.	4, Council House Street ...	ditto	
1488	Stuart, F	... Assistant, Turner, Morrison & Co	... 6, Lyons Range ...	ditto	
1489	Stuart, H A	... Assistant, Francis, Harrison, Hathaway & Co.	13, Government Place, East	ditto	
1490	Stuart, U	... Assistant Master, Doveton College	... 41, Free School Street ...	ditto	
1491	Stuart, W	... Assistant, Mackenzie, Lyall & Co	... 2, Lyons Range ...	ditto	
1492	Stubbs, H B	... Assistant, Depositors' Department, Bank of Bengal.	Strand ...	ditto	
1493	Studwell, F	... Assistant, J B Norton & Sons	... 1 & 2, Old Court House Corner	ditto	
1494	Sudlow, H	... Architect, Martin & Co.	... Jackson House ...	ditto	
1495	Sullivan, T J	... Proprietor, James Sullivan & Co	... 5-1, Council House Street ...	ditto	
1496	Sultana, W F	... Travelling Inspector of Accounts, Bengal Central Railway.	159, Bow Bazar Street ...	ditto	

1497	Summers, A H	...	Assistant, Mackinnon, Mackenzie & Co.	16, Strand	...	ditto
1498	Sutton, R L	...	Assistant, Commercial Bank of India, Ld.	5-1, Fairlie Place	...	ditto
1499	Swan, G A	...	Assistant, Bengal Coal Co, Ld ...	5, Fairlie Place	...	ditto
1500	Swan, T S	...	Partner, King Brothers ...	102, Clive Street	...	ditto
1501	Swaries, J L	..	Assistant, Whiteaway, Laidlaw & Co.	4, 5 & 6, Chowringhee	...	ditto
1502	Swaris, A	...	Measurer, Licensed Measurers' Department, Bengal Chamber of Commerce.	2, Clive Street	...	ditto
1503	Swaris, E O	...	ditto	ditto	...	ditto
**1504	Syers, J D	...	Assistant, Office of Secretary to the Government of India, Legislative Department.	Legislative Department Office, 5, Esplanade, West.		ditto

T

1505	Talbot, J M	...	Proprietor, J M Talbot ...	2, Bentinck Street	...	ditto
1506	Tallack, C M	...	1st Assistant, Public Debt Office, Bank of Bengal.	Strand	...	ditto
**1507	Tanner, P A	...	1st Class Senior Clerk, Upper Division, Office of Secretary to the Government of India, Military Department.	6, Esplanade, East	...	ditto
1508	Tanner, W R	...	Assistant, Lovelock and Lewes ...	25, Mangoe Lane	...	ditto
1509	Tassie, J A	...	Assistant, Finlay Muir & Co ...	1, Clive Street	...	ditto
1510	Tatam, A C	...	Personal Assistant to Secretary, office of the Calcutta Port Commissioners.	Strand	...	ditto
1511	Tavares, D J	...	Assistant, Lawrence and Mayo ...	16, Old Court House Street	...	ditto
1512	Taylor, A H	...	Assistant, Office of Secretary to the Government of India, Finance and Commerce Department.	Treasury Buildings	...	ditto
1513	Taylor, A M	...	Assistant, Whiteaway, Laidlaw & Co	4, 5 & 6, Chowringhee	...	ditto
1514	Taylor, J	...	Assistant, Mackinnon, Mackenzie & Co	16, Strand	...	ditto
1515	Taylor, S H	...	Assistant, Allen Brothers & Co ...	1, New China Bazar Street	...	ditto
1516	Taylor, W H	...	Assistant, G E Hotel Co, Ld ...	1, 2 & 3, Old Court House Street.		ditto

No.	Names.	Style or Calling.	Residence or place of business.	Religion.	Remarks.
	T				
**1517	Teasdale, F E	... 5th Class Clerk, Secretariat, Government of India, P W D.	Imperial Secretariat Buildings	Christian	
**1518	Teeling, C O'H	... Clerk, Foreign Office ...	Esplanade, West ...	ditto	
1519	Temple, A	... Assistant, J B Norton & Sons ...	1 & 2, Old Court House Corner	ditto	
1520	Templeton, A E	... Assistant Superintendent, Office of the Calcutta Port Commissioners.	Strand Road ...	ditto	
1521	Templeton, C W	... Assistant, British American Tobacco Co, Ld.	95, Clive Street ...	ditto	
1522	Templeton, E D	... Assistant, Ralli Brothers ...	1 & 2, Church Lane ...	ditto	
**1523	Ten Broeke, J A	... 3rd Class Clerk, Secretariat, Government of India, P W D.	Imperial Secretariat Buildings	ditto	
1524	Tester, C	... Assistant, Francis, Harrison, Hathaway & Co.	13, Government Place, East...	ditto	
1525	Theobald, G O	... Chartered Accountant, Martin & Co	Jackson House ...	ditto	
1526	Thomaides, P J	... Assistant, Petrocochino Brothers ...	4, Clive Ghat Street ...	ditto	
1527	Thomas, A E	... Assistant Superintendent, Accountant-General's Office, Bengal.	The Treasury ...	ditto	
1528	Thomas, E F	... Assistant, Whiteaway, Laidlaw & Co	4, 5 & 6, Chowringhee ...	ditto	
1529	Thomas, F J	... Assistant, George Henderson & Co ...	100, Clive Street ...	ditto	
1530	Thomas, R G D	... Assistant, J Thomas & Co ...	8, Mission Row ...	ditto	
1531	Thomas, T E	... ditto ...	ditto ...	ditto	
1532	Thomas, W	... Assistant, H Clark & Co ...	5, Old Court House Street ...	ditto	
**1533	Thompson, G L	... Clerk, Foreign Office ...	Esplanade, West ...	ditto	
1534	Thompson, N	... Assistant, Steuart & Co ...	8, Old Court House Corner ...	ditto	
**1535	Thomson, A B E	... 6th Class Clerk, Office of Secretary to the Government of India, P W D.	Imperial Secretariat Buildings	ditto	
1536	Thomson, J	... Assistant, F W Heilgers & Co ...	136, Canning Street ...	ditto	
1537	Thomson, J	... Assistant, Whiteaway, Laidlaw & Co	4, 5 & 6, Chowringhee ...	ditto	

1538	Thomson, W	...	Shed Officer, Office of the Calcutta Port Commissioners.	Strand Road	ditto
*1539	Thorpe, T	...	Assistant, Office of Secretary to the Government of India, Revenue and Agricultural Department, Forest Branch.	Imperial Secretariat Buildings	ditto
*1540	Threlfall, W A	...	Superintendent, Office of Secretary to the Government of India, Revenue and Agricultural Department, General Branch.	Imperial Secretariat Buildings	ditto
1541	Thurston, W J	...	Assistant, Meugens, King and Simson	102, Clive Street	ditto
1542	Tinson, Jno	...	Partner, J B Norton & Sons ...	1 & 2, Old Court House Corner.	ditto
1543	Tissendi, W S	...	Clerk, Foreign Office ...	Esplanade, West ...	ditto
1544	Tobias, A J	...	Superintendent of Printing and Records, Bank of Bengal.	Strand	ditto
1545	Todd, A E	...	Sub-Accountant, Chartered Bank of India, Australia and China.	5, Council House Street ...	ditto
1546	Tosh, A	...	Assistant, J Thomas & Co ...	8, Mission Row ...	ditto
1547	Totton, H J	...	Assistant, South British Fire and Marine Insurance Co.	1, Lall Bazar ...	ditto
1548	Traise, W J	...	Sub-Engineer, Office of Executive Engineer, 1st Calcutta Division.	Writers' Buildings ...	ditto
1549	Treglown, S	...	Assistant, Harman & Co ...	12, Government Place, East ...	ditto
1550	Treherne, F H	...	Manager, Grand Hotel ...	16, Chowringhee ...	ditto
1551	Tremble, H G	...	Assistant, G E Hotel Co, Ld ...	1, 2 & 3, Old Court House Street.	ditto
1552	Tringham, A	...	Assistant, Francis, Harrison, Hathaway & Co.	13, Government Place, East ...	ditto
1553	Tuck, A Newal	...	Partner, Ranken & Co ...	4, Old Court House Street ...	ditto
1554	Tulloch, W R	...	Clerk, Mathematical Instrument Department, Surveyor-General's Office.	15, Wood Street ...	ditto
1555	Turnage, F	...	Assistant, J B Norton & Sons ...	1 & 2, Old Court House Corner	ditto
1556	Turnbull, D R G	...	Sub-Engineer, Office of Executive Engineer, 1st Calcutta Division.	Writers' Buildings ...	ditto
1557	Turnbull, J	...	Assistant, Accountant, Mercantile Bank of India, Ld.	28, Dalhousie Square ...	ditto
1558	Turner, A W	...	Photo Engraver, Surveyor-General's Office.	14, Wood Street ...	ditto

No.	Names.	Style or Calling.	Residence or place of business.	Religion.	Remarks.
	T				
1559	Turner, J M	... Partner, Poppe, Delius & Co ...	15, Clive Row ...	Christian	
1560	Turton, G H	... Assistant, King Brothers ...	102, Clive Street ...	ditto	
1561	Tydeman, E R	... Assistant, Francis, Harrison, Hathaway & Co.	13, Government Place, East	ditto	
1562	Tyrer, S M	... Acting Manager, G Atherton & Co.	14, Clive Street ...	ditto	
	U				
1563	Urmson, W B	... Assistant, Kilburn & Co ...	4, Fairlie Place ...	ditto	
1564	Urquhart, D Mc N	... Jetty Superintendent, Office of the Calcutta Port Commissioners.	Strand Road ...	ditto	
1565	Urquhart, R D	... Warder, Calcutta Mint ...	47, Strand Road, North ...	ditto	
	V				
1566	Vallance, J E	... Accountant, Grindlay & Co ...	11, Hastings Street ...	ditto	
1567	Vallis, P W	... Assistant, Nicholson & Co ...	14, Old Court House Lane ...	ditto	
1568	Vandyke, F R	... Foreman, Litho Printer, Surveyor-General's Office.	14, Wood Street ...	ditto	
1569	Vanqulin, A H E	... Assistant, Bird & Co ...	101-1, Clive Street ...	ditto	
1570	Vardon, A	... Joint Railway Foreman, Office of the Calcutta Port Commissioners.	Strand Road ...	ditto	
1571	Vaughan, H C	... Engineer, Martin & Co ...	Jackson House ...	ditto	
1572	Vaz, F A	... Manager, A Vaz & Co ...	20, Metcalfe Street ...	ditto	
1573	Vears, H	... Assistant, Cook & Co ...	182, Dhurrumtollah ...	ditto	
1574	Vernieux, D S	... Clerk, Store Department, E I R ...	E I R House ...	ditto	
1575	Vernon, J	... Assistant, Army and Navy Co-Operative Society, Ld.	41, Chowringhee ...	ditto	
1576	Vick, A W	... Sub-Accountant, Chartered Bank of India, Australia and China.	5, Council House Street ...	ditto	
1577	Vickers, E	... Electric Engineer, Walter Locke & Co., Ld.	4, Esplanade ...	ditto	
1578	Vieux, T A	... Engraver, Engraving Department, Surveyor-General's Office.	13, Wood Street ...	ditto	
1579	Vieux, J	... Assistant Litho Printer, Surveyor-General's Office.	14, Wood Street ...	ditto	
1580	Villani, F C	... Assistant, Lawrence & Mayo ...	16, Old Court House Street ...	ditto	

1581	Vinay, Alex	...	Assistant, Ullmann, Hirschhorn & Co	14, Radha Bazar Lane	...	ditto
1582	Viney, E W	...	Assistant, Meugens, King & Simson	102, Clive Street	...	ditto
1583	Vincent, S B	...	Clerk, Home Department ...	Home Department	...	ditto
1584	Voice, T A	...	Assistant, Branch Department, Bank of Bengal.	Strand	...	ditto
1585	Voss, A E	...	Drafting Assistant, Calcutta Municipal Corporation.	Municipal Office	...	ditto
1586	Vyse, John C	...	Teacher, Calcutta Boys' School ...	72, Corporation Street	...	ditto
	W					
1587	Wachsel, H	...	Assistant, G F Kellner & Co ...	32, Chowringhee	...	ditto
1588	Waddle, J	...	Assistant, G E Hotel Co, Ld ...	1, 2 & 3, Old Court House Street.		ditto
1589	Waghorn, W J	...	Architectural Assistant, Chief Engineer's Office, E I R.	E I R House	...	ditto
1590	Wakefield, S B	...	Assistant, Thacker, Spink & Co ...	5, Government Place	...	ditto
1591	Wakefield, T A	...	Assistant, Whiteaway, Laidlaw & Co	4, 5 & 6, Chowringhee	...	ditto
1592	Walker, C	...	Assistant, Martin & Co ...	Jackson House	...	ditto
1593	Walker, E	...	Foundry Foreman, Office of Superintendent, Government Printing, India.	166, Dhurrumtollah Street	...	ditto
1594	Walker, G C	...	Head Clerk, Surveyor-General's Office, Correspondence Branch.	13, Wood Street	...	ditto
1595	Walker, H	...	Electric Engineer, Walter Locke & Co, Ld.	4, Esplanade	...	ditto
1596	Wall, W W	...	2nd Assistant, Litho Branch, Surveyor-General's Office.	14, Wood Street	...	ditto
1597	Wallace, A.	...	Deputy Superintendent, Office of Consulting Engineer to the Government of India for Railways.	E I R House	...	ditto
1598	Wallace, D R	...	Assistant, Ernsthausen, Ld ...	9, Clive Row	...	ditto
1599	Wallace, E	...	Assistant, Hoare, Miller & Co ...	38, Strand	...	ditto
1600	Wallace, Gordon	...	Assistant, Landale & Clark ...	12, Clive Row	...	ditto
1601	Wallace, G D	...	Assistant, Graham & Co ...	9, Clive Street	...	ditto
1602	Waller, L G	...	Assistant, W S Cresswell & Co ...	10, Hare Street	...	ditto
1603	Walling, C O	...	Assistant, D T Keymer & Co ...	1-1, Council House Street	...	ditto
1604	Walsh, C P	...	Assistant, Walker, Goward & Co ...	32, Jackson's Ghat Street	...	ditto
1605	Walsh, J	...	Manager, Ullmann, Hirschhorn & Co	14, Radha Bazar Lane	...	ditto

No.	Names.	Style or Calling.	Residence or place of business.	Religion.	Remarks.
	T				
1559	Turner, J M	... Partner, Poppe, Delius & Co ...	15, Clive Row ...	Christian	
1560	Turton, G H	... Assistant, King Brothers ...	102, Clive Street ...	ditto	
1561	Tydeman, E R	... Assistant, Francis, Harrison, Hathaway & Co.	13, Government Place, East	ditto	
1562	Tyrer, S M	... Acting Manager, G Atherton & Co.	14, Clive Street ...	ditto	
	U				
1563	Urmson, W B	... Assistant, Kilburn & Co ...	4, Fairlie Place ...	ditto	
1564	Urquhart, D Mc N	... Jetty Superintendent, Office of the Calcutta Port Commissioners.	Strand Road ...	ditto	
1565	Urquhart, R D	... Warder, Calcutta Mint ...	47, Strand Road, North ...	ditto	
	V				
1566	Vallance, J E	... Accountant, Grindlay & Co ...	11, Hastings Street ...	ditto	
1567	Vallis, P W	... Assistant, Nicholson & Co ...	14, Old Court House Lane ...	ditto	
1568	Vandyke, F R	... Foreman, Litho Printer, Surveyor-General's Office.	14, Wood Street ...	ditto	
1569	Vanqulin, A H E	... Assistant, Bird & Co ...	101-1, Clive Street ...	ditto	
1570	Vardon, A	... Joint Railway Foreman, Office of the Calcutta Port Commissioners.	Strand Road ...	ditto	
1571	Vaughan, H C	... Engineer, Martin & Co ...	Jackson House ...	ditto	
1572	Vaz, F A	... Manager, A Vaz & Co ...	20, Metcalfe Street ...	ditto	
1573	Vears, H	... Assistant, Cook & Co ...	182, Dhurrumtollah ...	ditto	
1574	Vernieux, D S	... Clerk, Store Department, E I R ...	E I R House ...	ditto	
1575	Vernon, J	... Assistant, Army and Navy Co-Operative Society, Ld.	41, Chowringhee ...	ditto	
1576	Vick, A W	... Sub-Accountant, Chartered Bank of India, Australia and China.	5, Council House Street ...	ditto	
1577	Vickers, E	... Electric Engineer, Walter Locke & Co., Ld.	4, Esplanade ...	ditto	
1578	Vieux, T A	... Engraver, Engraving Department, Surveyor-General's Office.	13, Wood Street ...	ditto	
1579	Vieux, J	... Assistant Litho Printer, Surveyor-General's Office.	14, Wood Street ...	ditto	
1580	Villani, F C	... Assistant, Lawrence & Mayo ...	16, Old Court House Street ...	ditto	

1581	Vinay, Alex	...	Assistant, Ullmann, Hirschhorn & Co	14, Radha Bazar Lane	...	ditto
1582	Viney, E W	...	Assistant, Meugens, King & Simson	102, Clive Street	...	ditto
1583	Vincent, S B	...	Clerk, Home Department ...	Home Department	...	ditto
1584	Voice, T A	...	Assistant, Branch Department, Bank of Bengal.	Strand	...	ditto
1585	Voss, A E	...	Drafting Assistant, Calcutta Municipal Corporation.	Municipal Office	...	ditto
1586	Vyse, John C	...	Teacher, Calcutta Boys' School ...	72, Corporation Street	...	ditto
	W					
1587	Wachsel, H	...	Assistant, G F Kellner & Co ...	32, Chowringhee	...	ditto
1588	Waddle, J	...	Assistant, G E Hotel Co, Ld ...	1, 2 & 3, Old Court House Street.		ditto
1589	Waghorn, W J	...	Architectural Assistant, Chief Engineer's Office, E I R.	E I R House	...	ditto
1590	Wakefield, S B	...	Assistant, Thacker, Spink & Co ...	5, Government Place	...	ditto
1591	Wakefield, T A	...	Assistant, Whiteaway, Laidlaw & Co	4, 5 & 6, Chowringhee	...	ditto
1592	Walker, C	...	Assistant, Martin & Co ...	Jackson House	...	ditto
1593	Walker, E	...	Foundry Foreman, Office of Superintendent, Government Printing, India.	166, Dhurrumtollah Street	...	ditto
1594	Walker, G C	...	Head Clerk, Surveyor-General's Office, Correspondence Branch.	13, Wood Street	...	ditto
1595	Walker, H	...	Electric Engineer, Walter Locke & Co, Ld.	4, Esplanade	...	ditto
1596	Wall, W W	...	2nd Assistant, Litho Branch, Surveyor-General's Office.	14, Wood Street	...	ditto
1597	Wallace, A.	...	Deputy Superintendent, Office of Consulting Engineer to the Government of India for Railways.	E I R House	...	ditto
1598	Wallace, D R	...	Assistant, Ernsthausen, Ld ...	9, Clive Row	...	ditto
1599	Wallace, E	...	Assistant, Hoare, Miller & Co ...	38, Strand	...	ditto
1600	Wallace, Gordon	...	Assistant, Landale & Clark ...	12, Clive Row	...	ditto
1601	Wallace, G D	...	Assistant, Graham & Co ...	9, Clive Street	...	ditto
1602	Waller, L G	...	Assistant, W S Cresswell & Co ...	10, Hare Street	...	ditto
1603	Walling, C O	...	Assistant, D T Keymer & Co ...	1-1, Council House Street	...	ditto
1604	Walsh, C P	...	Assistant, Walker, Goward & Co ...	32, Jackson's Ghat Street	...	ditto
1605	Walsh, J	...	Manager, Ullmann, Hirschhorn & Co	14, Radha Bazar Lane	...	ditto

No.	Names.	Style or Calling.	Residence or place of business.	Religion.	Remarks.
	W				
1606	Walsh, T N	... Assistant, Martin & Co	... Jackson House	...	Christian
1607	Walters, E B	... Clerk, Office of Pay Examiner, Military Accounts Department, E C.	3, Koila Ghat Street	...	ditto
1608	Ward, A H	... Superintendent, 'Gowkhana, District No. I.	Grey Street	...	ditto
1609	Ware, F H	... Assistant, Gillanders, Arbuthnot & Co	8, Clive Street	...	ditto
1610	Warmington, H W	... Office Superintendent, Office of Consulting Engineer to the Government of India for Railways.	E I R House	...	ditto
1611	Warwick, J B	... Assistant, Mackenzie, Lyall & Co	... 2, Lyons Range	...	ditto
1612	Watling, J B	... Head Assistant, Bengal Legislative Department.	Writers' Buildings	...	ditto
1613	Watson, E	... Local Manager, James Nourse, Ld	... 5, Commercial Buildings	...	ditto
1614	Watson, E A	... Assistant, McLeod & Co	... 31, Dalhousie Square	...	ditto
1615	Watson, F L	... Partner, H Clark & Co	... 5, Old Court House Street	...	ditto
1616	Watson, G	... Assistant, Gillanders, Arbuthnot & Co	8, Clive Street	...	ditto
1617	Watson, J D	... Assistant Master, Doveton College	... 41, Free School Street	...	ditto
1618	Watson, N A R	... Assistant, Jessop & Co, Ld	... 93, Clive Street	...	ditto
1619	Watts, F G	... Assistant, F and C Osler	... 12, Old Court House Street	...	ditto
1620	Wayles, W	... Assistant, Barlow & Co	... 37, Strand	...	ditto
1621	Webb, C	... Assistant, Davenport & Co	... 101-1, Clive Street	...	ditto
1622	Webb, G H	... Firm of J Boseck & Co	... 7, Wellesley Place	...	ditto
1623	Webb, T L	... Partner, Harnack & Co	... 10 & 10-1, Old Court House Street.		ditto
1624	Webb, W H	... Assistant, Turner, Morrison & Co	... 6, Lyons Range	...	ditto
1625	Webster, H M	... Assistant, Becker, Gray & Co	... 7, Hastings Street	...	ditto
1626	Webster, Norman	... Assistant, Bird & Co	... 101-1, Clive Street	...	ditto
1627	Weir, A T S	... Clerk, Foreign Office	... Esplanade, West	...	ditto
1628	Wells, W G	... District Building Surveyor, District No. IV.	Municipal Office	...	ditto
1629	Westerhout, A B	... Assistant, Anderson, Wright & Co	... 22, Strand	...	ditto

1630	Wheeler, T H	...	Assistant, Andrew, Yule & Co	...	7, Clive Row	... ditto
1631	Wheldon, J W	...	Assistant, Great Eastern Hotel Co, Ld		1, 2 & 3, Old Court House Street.	ditto
1632	Whitby, H B	...	Assistant, Kilburn & Co	...	4, Fairlie Place	... ditto
**1633	White, A H	...	Junior 5th Class Clerk, Lower Division, Office of Secretary to the Government of India, Military Department.		6, Esplanade, East	... ditto
1634	White, B A	...	Assistant, Bird & Co	...	101-1, Clive Street	... ditto
1635	White, C H	...	Assistant, Government Medical Store Department, B C.		8, Wellesley Place	... ditto
1636	White, T A	...	Controller of Stores, E I R	...	E I R House	... ditto
1637	Whittmore, W	...	Assistant, Cook & Co	...	182 and 183, Dhurrumtollah Street.	ditto
1638	Whyte, A N	...	Assistant, Gladstone, Wyllie & Co	...	101, Clive Street	... ditto
1639	Whyte, G	...	4th grade Accountant, Office of Examiner, Public Works Accounts, Bengal.		8, Lyons Range	... ditto
1640	Wickham, W G	...	Assistant, Gillanders, Arbuthnot & Co		8, Clive Street	... ditto
1641	Wighton, A	...	Assistant, Thomas, Duff & Co, Ld	...	15, Clive Row	... ditto
1642	Wild, C A	...	Assistant, Anderson, Wright & Co	...	22, Strand Road	... ditto
1643	Williams, H	...	Assistant, Heatly and Gresham, Ld		6, Waterloo Street	... ditto
1644	Williams, L	...	Assistant, Government Medical Store Department, B C.		8, Wellesley Place	... ditto
1645	Williams, P	...	Extra Assistant Superintendent, Surveyor-General's Office, Drawing Department.		13, Wood Street	... ditto
1646	Williams, S C	...	Deputy Secretary to Agent, E I R	...	E I R House	... ditto
1647	Williamson, C J	...	Assistant, Thacker, Spink & Co	...	5, Government Place	... ditto

No.	Names	Style or Calling.	Residence or place of business.	Religion.	Remarks
	W				
1648	Williamson, O E	... Assistant, Balmer, Lawrie & Co ...	103, Clive Street ...	Christian	
1649	Willis, Ed'A	... Assistant, Poppe, Delius & Co ...	15, Clive Row ...	ditto	
1650	Willis, W H	... Assistant, A P Stockwell & Co ...	2, Pollock Street ...	ditto	
1651	Wills, D A	... Assistant, F W Heilgers & Co ...	136, Canning Street ...	ditto	
1652	Wills, G R	... Assistant, Williamson, Magor & Co	4, Mangoe Lane ...	ditto	
1653	Wilson, A C	... Junior 5th class Clerk, Lower Division, Office of Secretary to the Government of India, Military Department.	6, Esplanade, East ...	ditto	
1654	Wilson, D R	... Measurer, Licensed Measurers' Department, Bengal Chamber of Commerce.	2, Clive Street ...	ditto	
1655	Wilson, G E	... Assistant, Office of Private Secretary to the Viceroy.	6, Council House Street ...	ditto	
1656	Wilson, H F	... Assistant, Shaw, Wallace & Co ...	20, Strand Road ...	ditto	
1657	Wilson, J	... Assistant, Begg, Dunlop & Co ...	12, Mission Row ...	ditto	
1658	Wilson, J B	... Personal Assistant to T M, Office of the Calcutta Port Commissioners.	Strand Road ...	ditto	
1659	Wilson, S	... Firm of S Wilson & Co ...	10A, Hare Street ...	ditto	
1660	Wilson, T C	... Assistant, Bank of Calcutta, Ld. ...	7, Clive Row ...	ditto	
*1661	Wilsone, A H	... 5th class Senior Clerk, Upper Division, Office of Secretary to the Government of India, Military Department.	6, Esplanade, East ...	ditto	
1662	Wince, W G	... Personal Assistant to Health Officer, Municipal Office.	Municipal Office ...	ditto	
1663	Wingrove, A C	... Manager, G F Playfair & Co ...	6, Old Post Office Street ...	ditto	
1664	Winkfield, R E	... 2nd Engineer, Calcutta Electric Supply Corporation, Ld	4, Fairlie Place ...	ditto	
*1665	Winn, G F	... Superintendent, Home Department ...	Home Department ...	ditto	
1666	Wittet, R	... Assistant, Mackintosh, Burn & Co ...	8, Esplanade, East ...	ditto	
1667	Wollen, C	... Assistant, Great Eastern Hotel Co, Ld.	1, 2 and 3, Old Court House Street.	ditto	

1668	Wood, T D	...	Assistant, Begg, Dunlop & Co	...	12, Mission Row	...	ditto
**1669	Wood, W S	...	6th class Clerk, Secretariat, Government of India, P W D.		Imperial Secretariat Buildings		ditto
1670	Woodhead, H	...	Assistant, Dykes & Co	...	29, Waterloo Street	...	ditto
1671	Woods, J	..	Assistant, Ranken & Co	...	4, Old Court House Street	...	ditto
1672	Woods, J	...	Assistant, Davis, Leech & Co	...	11, Government Place	...	ditto
1673	Woods, R M	...	Assistant, J A Dykes & Co	...	102, Clive Street	...	ditto
1674	Woodward, H	...	Assistant, W Newman & Co	...	4, Dalhousie Square	...	ditto
1675	Wordsworth, H	...	Assistant, Ernsthausen, Ld	...	9, Clive Row	...	ditto
1676	Wordsworth, H H	...	Assistant, Bird & Co	...	101-1, Clive Street	...	ditto
1677	Wright, A	...	Assistant, Harold & Co	...	2, Dalhousie Square	...	ditto
1678	Wright, A S	...	Assistant, Traill & Co	...	20, British Indian Street	...	ditto
1679	Wright, F A	...	Deputy Chief Engineer, E I R	...	E I R House	...	ditto
1680	Wright, W R	...	Assistant, Turner, Morrison & Co	...	6, Lyons Range	...	ditto
	Y						
1681	Yakchee, A	...	Assistant, Board of Revenue, L P	...	2, Bankshall Street	...	ditto
1682	Yakchee, L R	...	Head Assistant to Jetty Supdt., Office of the Calcutta Port Commissioners.		Strand Road	...	ditto
1683	Yapp, G F	...	Assistant, John Dickinson & Co, Ld		7, New China Bazar Street	...	ditto
1684	Yelland, F W	...	Assistant, T E Thomson & Co, Ld	...	9, Esplanade, East.	...	ditto
1685	Yeoman, C L	...	Assistant, Gillanders, Arbuthnot & Co		8, Clive Street	...	ditto
1686	Youd, S	...	Assistant, Youd & Co	...	7-2, Wellesley Place	...	ditto
**1687	Young, D J	...	Assistant, Bengal Secretariat, Judicial, Political and Appointment Departments.		Writers' Buildings	...	ditto
1688	Young, J J B	...	Assistant, Barry & Co	...	5, Lyons Range	...	ditto
1689	Young, R	...	Assistant, Andrew, Yule & Co	...	7, Clive Row	...	ditto

No	Name	Style or Calling.	Residence or place of business.	Religion.	Remarks.
	Y				
1690	Youngson, D ...	Assistant, Macneill & Co ...	2, Clive Ghat Street ...	Christian	
1691	Yule, W R ...	Assistant, Jardine, Skinner & Co ...	4, Clive Row ...	ditto	
	Z				
1692	Zemin, J S ...	Principal, Doveton College ...	41, Free School Street ...	ditto	
1693	Zimmermann, E ...	Assistant, Anderson, Wright & Co ...	22, Strand ...	ditto	
	A				
1694	Abbad Abul Makarem ...	Assistant, Office of Private Secretary to the Viceroy.	6, Council House Street ...	Muhammadan	
1695	Abdul, Karim Khan ...	Accountant, Office of Government Examiner of Railway Accounts, E I R.	E I R House ...	ditto	
1696	Abdur Razak, Munshi ...	Draftsman, Surveyor-General's Office, Drawing Department.	13, Wood Street ...	ditto	
1697	Acharya, Hari Pado ...	Inspector, Collector's Department ...	Municipal Office ...	Hindu	
1698	Acharya, Tiruvenkut K ...	Superintendent, Accountant-General's Office, Bengal.	The Treasury ...	ditto	
1699	Addy, Asutosh ...	Partner, Oriental Type Foundry ...	16, Lower Chitpur Road ...	ditto	
1700	Addy, Bonomally ...	Assistant, George Henderson & Co ...	100, Clive Street ...	ditto	
1701	Addy, Gosta Behary ...	Assistant, Office of Superintending Engineer, P W D, Bengal, South-Western Circle.	Writers' Buildings ...	ditto	
1702	Addy, Grindra Nath ...	Partner, Oriental Type Foundry ...	16, Lower Chitpur Road ...	ditto	
1703	Addy, Khetter Nath ...	Clerk, Gillanders, Arbuthnot & Co ...	8, Clive Street ...	ditto	
1704	Addy, P N ...	Assistant, Board of Revenue, L P ...	2, Bankshall Street ...	Christian	
1705	Aditya, Satyendra Nath ...	Accountant, Office of Pay Examiner, Military Accounts Department, E C	3, Koila Ghat Street ...	Hindu	
1706	Ahmad, Intesam Rasul ...	Assistant, Board of Revenue, L P ...	2, Bankshall Street ...	Muhammadan	
1707	Ahmad, Munshi Masih-ud-din.	Assistant, Office of Secretary to the Government of India, Legislative Department.	Legislative Department Office, 5, Esplanade, West.	ditto	
1708	Ahmad, Maulvi Sayed-ud-din.	Assistant, Office of Secretary to the Government of India, Legislative Department.	Legislative Department Office, 5, Esplanade, West.	ditto	
1709	Aich, Jogendra Chandra ...	Assistant Engineer, Suburban Survey	4, Corporation Street ...	Hindu	

1710	Askari, Maulvi Mohamed ...	Assistant, Office of Secretary to the Government of India, Legislative Department.	Legislative Department Office, 5, Esplanade, West.	Muhammadan
1711	Ash, Mutty Lall ...	Superintendent, Calcutta Water works.	5, Corporation Street ...	Hindu
	B			
1712	Bagchi, Debendra Nath ...	Sub-Assistant Auditor, E I R	E I R House ...	ditto
1713	Bagchi, Kartick Chunder ...	Assistant, George Henderson & Co ..	100, Clive Street ...	ditto
1714	Bagchi, Kristo Lal ...	License Inspector ...	Municipal Office ...	ditto
*1715	Bajpayee, Mukta Prasad ...	7th class Clerk, Secretariat, Government of India, P W D.	Imperial Secretariat Buildings	ditto
*1716	Balak Nath ...	5th class Clerk, Secretariat, Government of India, Public Works Department.	Imperial Secretariat Buildings	ditto
1717	Banerjee, A. C. ...	2nd Clerk, Port Office ...	15-1, Strand Road ...	ditto
1718	Banerjee, A D ...	Assistant, Mackinnon, Mackenzie & Co	16, Strand ...	Christian
1719	Banerjee, Aghor Nath, M.A.	Assistant to Director of Public Instruction, Bengal.	Writers' Buildings ...	Hindu
1720	Banerjee, Akhoy Kumar ...	Cashier, Office of Examiner, Public Works Accounts, Bengal.	8, Lyons Range ...	ditto
1721	Banerjee, Apar Nath ...	Clerk, Jessop & Co, Ld ...	93, Clive Street ...	ditto
1722	Banerjee, Arun Chunder ...	Assistant, Financial Department, Bengal Secretariat.	Writers' Buildings ...	ditto
1723	Banerjee, Ashootosh ...	Superintendent, Accountant-General's Office, Bengal.	The Treasury ...	ditto
*1724	Banerjee, Atul Krishna ...	3rd class Assistant, Office of Accountant-General, Military Department.	6, Esplanade Row, East ...	ditto
1725	Banerjee, Aunnoda Prosad	Clerk, Audit Department, E I R ...	E I R House ...	ditto
1726	Banerjee, Bacharam ...	Draftsman, Surveyor General's Office, Drawing Department.	13, Wood Street ...	ditto
1727	Banerjee, Basanta Kumar ...	Clerk, Comptroller-General's Office...	The Treasury ...	ditto
1728	Banerjee, Behary Lall ...	Clerk, Office of Pay Examiner, Military Accounts Department, E C.	3, Koila Ghat Street ...	ditto
1729	Banerjee, Bepin Behary ...	Assistant, Bengal Secretariat, Financial Department.	Writers' Buildings ...	ditto

No.	Names.	Style or Calling.	Residence or place of business.	Religion.	Remarks.
	B				
1730	Banerjee, Bepin Behary ...	Assistant, Office of Secretary to the Government of India, Finance and Commerce Department.	Treasury Buildings ...	Hindu	
**1731	Banerjee, Bepin Behary ...	6th class Clerk, Office of Secretary to the Government of India, P W D.	Imperial Secretariat Buildings	ditto	
1732	Banerjee, Bhola Nath ...	Accountant, Audit Office, E I R ...	E I R House ...	ditto	
1733	Banerjee, Bhoopoty Churn...	Assistant, Office of Examiner of Ordnance and Army Clothing Branches.	Military Accounts Department Buildings, Koila Ghat Street	ditto	
**1734	Banerjee, Bhudeb ...	Clerk, Office of Accountant-General, P W D.	Imperial Secretariat Buildings	ditto	
**1735	Banerjee, Bijoy Kissen ...	Junior 1st class Clerk, Lower Division, Office of Secretary to the Government of India, Military Department.	6, Esplanade, East ...	ditto	
**1736	Banerjee, Bisso Behary ...	7th class Clerk, Secretariat, Government of India, Public Works Department.	Imperial Secretariat Buildings	ditto	
1737	Banerjee, Bunkim Chunder	Assistant, Office of Examiner of Ordnance and Army Clothing Branches.	Military Accounts Department Buildings, Koila Ghat Street.	ditto	
1738	Banerjee, Bunko Behary ...	Inhabitant ...	81, Baranussee Ghose's Street	ditto	
1739	Banerjee, Chunder Kumar ...	Assessor, Income-tax ...	3, Charnock Place ...	ditto	
1740	Banerjee, Chunder Nath ...	Assistant, Office of Secretary to the Government of India, Finance and Commerce Department.	Treasury Buildings ...	ditto	
1741	Banerjee, Denonath ...	Accountant, Pelican and British Empire Life Office.	12, Dalhousie Square ...	ditto	
1742	Banerjee, Devendro Nath ..	1st Assistant to Librarian, Bengal Library.	Writers' Buildings ...	ditto	
1743	Banerjee, Devendro Nath ...	Assistant, Office of Examiner of Ordnance and Army Clothing Branches.	Military Accounts Department Buildings, Koila Ghat Street.	ditto	
1744	Banerjee, Doorga Churn ...	Assistant, Mackinnon, Mackenzie & Co	16, Strand ...	ditto	
1745	Banerjee, Gopal Chunder ...	Assistant, Grossman[n] & Co ...	2, Fairlie Place ...	ditto	

1746	Banerjee, Gopal Chunder ...	Accountant, Office of Controller of Military Accounts, E C, Accounts Branch.	3, Koila Ghat Street ...	ditto
1747	Banerjee, Gunamani ...	Assistant Superintendent, Accountant-General's Office, Bengal.	The Treasury ...	ditto
1748	Banerjee, Hara Kumar ...	Hackney Carriage Inspector, Calcutta Corporation.	Municipal Office ..	ditto
1749	Banerjee, Hara Lal ...	Clerk, Comptroller General's Office ...	The Treasury ...	ditto
*1750	Banerjee, Haridas ...	Assistant, Bengal Office, Judicial, Political and Appointment Departments.	Writers' Buildings ...	ditto
1751	Banerjee, Haridas, M A. ...	Head Assistant to the Director of Public Instruction, Bengal.	Writers' Buildings ...	ditto
1752	Banerjee, Hem Chandra ...	Traffic Canvasser, B C R ...	159-1, Bow Bazar Street ...	ditto
1753	Banerjee, Hem Chunder ...	Assistant, Office of Inspector-General of Civil Hospitals and Sanitary Commissioner for Bengal.	Writers' Buildings ...	ditto
1754	Banerjee, Jadoo Nath ...	Assistant, Octavius Steel & Co ...	14, Old Court House Street ...	ditto
1755	Banerjee, Jogendra Nath ...	Cashier, Martin & Co ..	Jackson House ...	ditto
1756	Banerjee, Jogendra Nath ...	Assistant, Mackinnon, Mackenzie & Co	16, Strand ...	ditto
1757	Banerjee, Kalidas ...	Assistant, R B Rodda & Co ...	2, Wellesley Place ...	ditto
*1758	Banerjee, Kalidas ...	Jr. 4th class Clerk, Lower Division, Office of Secretary to the Government of India, Military Department.	6, Esplanade, East ...	ditto
1759	Banerjee, Kaliprasana ...	Accountant, Office of Executive Engineer, 1st Calcutta Division.	Writers' Buildings ...	ditto
1760	Banerjee, Kartic Chunder...	Assistant, Mackinnon, Mackenzie & Co	16, Strand ...	ditto
1761	Banerjee, Kala Chand ...	Cashier, R Scott Thomson & Co, Ld	15, Government Place, East ...	ditto
1762	Banerjee, Kedar Nath ...	Assistant, Apcar & Co ...	19, Radha Bazar ...	ditto
1763	Banerjee, Kedar Nath ...	Partner, Kedar Nath Banerjee & Co	82, Clive Street ...	ditto
1764	Banerjee, Khetter Mohan...	1st class Assistant, Office of Controller of Military Accounts, E C, Supply and Transport Branch.	3, Koila Ghat Street ...	ditto
1765	Banerjee, Khetter Mohun...	Assistant, General and Revenue Departments, Bengal Secretariat.	Writers' Buildings ...	ditto

No.	Names.	Style or Calling.	Residence or place of business.	Religion.	Remarks.
	B				
1766	Banerjee, Khetter Mohan ..	Clerk, Comptroller-General's Office ...	The Treasury ...	Hindu	
1767	Banerjee, Khetter Nath ...	Clerk, Chief Engineer's Office, E I R	E I R House ...	ditto	
1768	Banerjee, Kissori Mohun ...	Assistant, Mackinnon, Mackenzie & Co	16, Strand ...	ditto	
1769	Banerjee, Kshetra Mohan, M.A.	Professor, Ripon College ...	60, Mirzapore Street ...	ditto	
1770	Banerjee, Kshetra Mohon ...	Assistant Master, Hare School ...	College Square ...	ditto	
1771	Banerjee, Lalit Kumar ...	Professor, Bangabashi College ...	Boybazar ...	ditto	
1772	Banerjee, Mohendra Nath	Assistant, Bengal Secretariat, Financial Department.	Writers' Buildings ...	ditto	
1773	Banerjee, Monindra Nath ...	Assistant, Kedar Nath Banerjee & Co	82, Clive Street ...	ditto	
1774	Banerjee, Murulidhar, M A.	Professor, Sanskrit College ...	College Square ...	ditto	
1775	Banerjee, Naudo Lal ...	Assistant, Turner, Morrison & Co ...	6, Lyons Range ...	ditto	
1776	Banerjee, Narayan Chunder	Stationery-keeper, Office of Superintendent, Government Printing, India.	8, Hastings Street ...	ditto	
1777	Banerjee, Narendra Nath ...	Assistant, Bengal Secretariat, Financial Department.	Writers' Buildings ...	ditto	
1778	Banerjee, Nil Kanto ...	Head Clerk, Military Works, Office of Commanding Royal Engineer, Presidency District.	Fort William ...	ditto	
1779	Banerjee, Nilmony ...	Clerk, Audit Branch, G T M's Office, E I R.	E I R House ...	ditto	
1780	Banerjee, Nirmal Chandra, M.A.	1st Assistant to Registrar, Calcutta University.	Senate House ...	Christian	
1781	Banerjee, Nivaran Chunder	Cashier, North British and Mercantile Insurance Office.	100, Clive Street ...	Hindu	
1782	Banerjee, Nogendra Nath ..	Accountant, Office of Government Examiner of Railway Accounts, P W D.	B C R House ...	ditto	
1783	Banerjee, Probodh Chunder	Assistant, Moran & Co ...	3, Mangoe Lane ...	ditto	

*.*1784	Banerjee, P [redacted]	...	Assistant, Office of Secretary to the Government of India, Revenue and Agricultural Department, Agriculture Branch.	Imperial Secretariat Buildings	ditto
1785	Banerjee, Ram Chunder	..	Clerk, North British & Mercantile Insurance Office.	100, Clive Street ...	ditto
1786	Banerjee, Sarat Chunder	...	Assistant, Office of Inspector-General of Police, L P.	Writers' Buildings ...	ditto
1787	Banerjee, Sarat Chunder	...	Clerk, Comptroller-General's Office...	The Treasury ...	ditto
1788	Banerjee, Sashadhar	...	Assistant, Army and Navy Co-Operative Society, Ld.	41, Chowringhee ...	ditto
1789	Banerjee, Satya Sharan	...	Clerk, Office of Pay Examiner, Military Accounts Department, E C.	3, Koila Ghat Street ...	ditto
1790	Banerjee, Satyendra Nath	...	Clerk. Office of Pay Examiner, Military Accounts Department, E C.	3, Koila Ghat Street ...	ditto
1791	Banerjee, Seetal Chandra	...	Proprietor, Standard Press ...	81 and 84, Radha Bazar Street	ditto
*.*1792	Banerjee, Shangsar Chunder		Accountant. Accountant-General's Office, P W D.	Imperial Secretariat Buildings	ditto
1793	Banerjee, Shoorendra Chunder.		1st Assistant, Legal Remembrancer's Office.	High Court ...	ditto
1794	Banerjee, Soshi Bhusan	...	Clerk. Audit Office, E I R ...	E I R House ...	ditto
1795	Banerjee, Surendra Nath	...	Professor, Metropolitan Institution ..	Sunker Ghose's Lane, Bar Simla.	ditto
*.*1796	Banerjee, Tincowry, B.L.	...	Assistant. Bengal Office, Judicial, Political and Appointment Departments.	Writers' Buildings ...	ditto
1797	Banerjee, Troylocko Nath		Assistant, Graham & Co ...	9, Clive Street ...	ditto
1798	Banerjee, Umbica Churn	...	Clerk, Office of Government Examiner of Railway Accounts, Public Works Department.	E I R House ...	ditto
1799	Banerjee, Upendro Chunder		Superintendent, Comptroller-General's Office.	The Treasury ...	ditto
1800	Banerjee, Upendro Lal	...	Superintendent, Accountant-General's Office Bengal	The Treasury ...	ditto

No.	Names.	Style or Calling.	Residence or place of business.	Religion.	Remarks.
	B				
1801	Banerjee, Upendro Nath ...	Clerk, G F Kellner & Co ...	32, Chowringhee ...	Hindu	
**1802	Barnaan, Lakshminarayan...	1st class Senior Clerk, Upper Division, Office of Secretary to the Government of India, Military Department.	6, Esplanade, East ...	ditto	
**1803	Bhadoory, Hira Lall ...	Accountant, Accountant-General's Office, Public Works Department.	Imperial Secretariat Buildings	ditto	
1804	Bhadoory, Nirmal Chunder	Accountant, Office of Government Examiner of Railway Accounts, Public Works Department.	E I R House ...	ditto	
1805	Bhandary, K N ...	Drafting Assistant, Calcutta Municipal Corporation.	Municipal Office ...	ditto	
1806	Bhonjo, Nobin Chunder ...	Inhabitant ...	Rugoonath Chatterjee's Street, Bar Simla.	ditto	
1807	Bhur, Girish Chunder ...	Assistant, Barry & Co ...	5, Lyons Range ...	ditto	
1808	Bhur, Okhoy Kumar ...	Assistant, Bathgate & Co ...	19, Old Court House Street ...	ditto	
1809	Bhuttacharjee, Bishonath ...	Head Clerk, Audit Office, B C R ...	159, Bow Bazar Street ...	ditto	
1810	Bhuttacharjee, Brojo Kishore	Assistant, Office of Inspector-General of Police, L P.	Writers' Buildings ...	ditto	
**1811	Bhuttacharjee, Haridass ...	Clerk, Office of Accountant-General, Public Works Department.	Imperial Secretariat Buildings	ditto	
1812	Bhuttacharjee, Hem Chunder	Inspector, Suburban Drainage Department, Municipal Office.	4, Corporation Street ...	ditto	
1813	Bhuttacharjee, Hemadrish Chunder.	Accountant, 4th grade, Office of Examiner, Public Works Accounts, Bengal.	8, Lyons Range ...	ditto	
1814	Bhuttacharjee, Jadu Nath	Head Assistant, Office of Inspector-General of Prisons, Bengal.	Writers' Buildings ...	ditto	
1815	Bhuttacharjee, Jnaneah Ch.	Assistant Engineer, Office of Executive Engineer, 2nd Calcutta Division.	Writers' Buildings ..	ditto	
1816	Bhuttacharjee, Kali Krishna	Professor, Metropolitan Institution	Sunker Ghose's Lane, Bar Simla.	ditto	
1817	Bhuttacharjee, Kshettra Nath	Clerk, Comptroller-General's Office...	The Treasury ...	ditto	

1818	*Bhuttacharjee, Nath.*	*Mohendra*	Assistant, Office of Inspector-General of Civil Hospitals, and Sanitary Commissioner, Bengal.	Writers' Buildings	...	ditto
1819	Bhuttacharjee, Chunder.	Probodh	3rd class Assistant, Office of Controller of Military Accounts E C, Supply and Transport Branch.	3, Koila Ghat Street	...	ditto
1820	Bhuttacharjee, Chunder.	Probodh	Foreman, Office of Superintendent, Government Printing, India.	8, Hastings Street	...	ditto
1821	Bhuttacharjee,	Rajani Kanta	Assistant Assessor, Municipal Office	Municipal Office	...	ditto
1822	Bhuttacharjee, Nath.	Rajendro	Head Clerk, Ripon College ...	60, Mirzapore Street	...	ditto
1823	Bhuttacharjee, Chunder.	Ram	Assistant Superintendent, Accountant-General's Office, Bengal.	The Treasury	...	ditto
1824	Bhuttacharjee, (Rai Bahadur).	Ram Das	Honorary Assistant Engineer, Office of Executive Engineer, 1st Calcutta Division.	Writers' Buildings	...	ditto
1825	Bhuttacharjee,	Ram Jadu ...	Assistant, Board of Revenue, L P ...	2, Bankshall Street	...	ditto
1826	Bhuttacharjee,	Sarat Kumar	License Inspector ...	Municipal Office	...	ditto
1827	Bhuttacharjee,	Sham Lall	Stationery Ledger-keeper and Chief Accountant, Stamp and Stationery Office.	4 and 5, Church Lane	...	ditto
**1828	Bhuttacharjee, Nath.	Surendra	Junior 5th Class Clerk, Lower Division, Office of Secretary to the Government of India, Military Department.	6, Esplanade, East	...	ditto
1829	Bhuttacharjee, Narayan.	Upendra	Municipal Head Clerk, Presidency Commissioner's Office.	3, Charnock Place	...	ditto
1830	Bhuttacharjee, Nath.	Upendra	Estimator, Office of Superintending Engineer, Central Circle.	Writers' Buildings	...	ditto
**1831	Biswas, A C	...	Assistant, Office of Secretary to the Government of India, Revenue and Agricultural Department, Forest Branch.	Imperial Secretariat Buildings		ditto
**1832	Biswas, Atul Krishna	...	.Clerk, Home Department ...	Home Department	...	Brahmo
1833	Biswas, Bhupati Nath	...	Cashier, Commercial Bank of India, Ld.	5-1, Fairlie Place	...	Hindu

No.	Name.	Style or Calling.	Residence or place of business.	Religion.	Remarks.
	B				
1834	Biswas, Chunder Kanto ..	Assistant, Octavius, Steel & Co, ...	14, Old Court House Street ...	Hindu	
1835	Biswas, Gobind Chunder ...	Clerk, Commercial Union Assurance Co, Ld.	29, Dalhousie Square ...	ditto	
1836	Biswas, Gopal Chunder ...	Clerk, Mackenzie, Lyall & Co ...	2, Lyons Range ...	ditto	
1837	Biswas, K N ...	Assistant, Landale and Morgan ...	5, Mission Row ...	ditto	
1838	Biswas, Paul Chunder Mohun.	Clerk, Office of Pay Examiner, Military Accounts Department, E. C.	3, Koila Ghat Street ...	Christian	
1839	Biswas, Prec Krishna ...	Sub-Engineer, Office of Executive Engineer, 1st Calcutta Division.	Writers' Buildings ...	Hindu	
1840	Biswas, Sarat Chunder ...	Jr. 3rd class Clerk, Lower Division, Office of Secy. to the Government of India, Military Department.	6, Esplanade, East ...	ditto	
1841	Bose, Abinash Chunder ...	Supervisor, District Engineer's Office, District No. 2, Municipal Office.	Municipal Office ...	ditto	
1842	Bose. Abinash Chunder ...	Assistant Superintendent, Accountant-General's Office, Bengal.	The Treasury ...	ditto	
1843	Bose, Amrito Lall ...	6th class Clerk, Secretariat, Government of India, P W D.	Imperial Secretariat Buildings	ditto	
1844	Bose, Ashu Tosh ...	Clerk, Comptroller-General's Office ...	The Treasury ...	ditto	
1845	Bose, Bam[illegible]churn ...	Assistant, Government of India, Statistical Department.	7, Koila Ghat Street ...	ditto	
1846	Bose, Behari Lal ...	Assistant, J H Elliott & Co, Ld ...	29, Strand ...	ditto	
1847	Bose, Bejoy Chunder ...	Assistant, General and Revenue Departments, Bengal Secretariat.	Writers' Buildings ...	ditto	
1848	Bose, Bepin Behari .	Assistant, W N Bhose & Co ...	63, Kara Street ...	ditto	
1849	Bose, Bishnoo Churn ...	Sub-Assessor ...	Municipal Office ...	ditto	
1850	Bose Boroda Kanto ...	Clerk, Office of Controller of Military Accounts, Accounts Branch, E C.	8, Koila Ghat Street ...	ditto	
1851	Bose, Boroda Kanto ...	3rd grade Accountant, Office of Controller of Military Accounts, E C.	3, Koila Ghat Street ...	ditto	

1852	Bose, Chunder Nath ...	Assistant, Williamson, Magor & Co	4, Mangoe Lane ...	ditto
*1853	Bose, Debendra Nath ...	Assistant, Bengal Office, Judicial, Political and Appointment Departments.	Writers' Buildings ...	ditto
1854	Bose, Doorga Dass ...	Clerk, National Bank of India, Ld...	104, Clive Street ...	ditto
1855	Bose, Durga Pada ...	Inspector, Corporation of Calcutta, Suburban Drainage Department.	4, Corporation Street ...	ditto
1856	Bose, Fakir Chand ...	Assistant, Board of Revenue, L. P....	2, Bankshall Street ...	ditto
1857	Bose, Ghonesham ...	Assistant, Graham & Co ...	9, Clive Street ...	ditto
1858	Bose, Girindra Nath ...	Clerk, Audit Office, E I R ...	E I R House ...	ditto
*1859	Bose, Haradhone ...	Assistant, Bengal Secretariat, General and Revenue Departments.	Writers' Buildings ...	ditto
1860	Bose, Haran Chandra ...	Assistant, Office of Secretary to the Government of India, Finance and Commerce Departments.	Treasury Buildings ...	ditto
1861	Bose, Hari Das ...	Clerk, Office of Pay Examiner, Military Accounts Department, E C.	3, Koila Ghat Street ...	ditto
*1862	Bose, Jnanendra Nath ...	Assistant, Bengal Office, Judicial, Political and Appointment Departments.	Writers' Buildings ...	ditto
1863	Bose, J C ...	Inspector, Collector's Department, Municipal Office.	Municipal Office ...	ditto
*1864	Bose, Jeebundhone ...	Clerk, Home Department ...	Home Department ...	Christian
1865	Bose, Jogendro Chunder ...	Dy. License Officer, Municipal Office	Municipal Office ...	Hindu
1866	Bose, Jogendro Krishna ...	License Inspector, Municipal Office	Municipal Office ...	ditto
1867	Bose, Jogendro Lal ...	Storekeeper, Burn & Co ...	7, Hastings Street ...	ditto
1768	Bose, Jogendro Nath ...	4th class Assistant, Controller of Military Accounts, E C, Supply and Transport Branch.	3, Koila Ghat Street ...	ditto
1869	Bose, Joogal Kishore ...	Clerk, G. F. Kellner & Co ...	32, Chowringhee ...	ditto
1870	Bose, K C ...	Supervisor, District Engineer's Office, District No. I, Municipal Office.	79, Cornwallis Street ...	ditto
1871	Bose, Khagendra Nath ...	Assistant, Bengal Office, Judicial, Political and Appointment Departments.	Writers' Buildings ...	ditto

No	Names	Style or Calling.	Residence or place of business.	Religion.	Remarks.
	B				
1872	Bose, Khetter Mohun ...	Head Clerk, Agent and Chief Engineer's Office, B C Railway.	159-1, Bowbazar Street ...	Hindu	
1873	Bose, Lolit Mohun ...	Financier, Ezakiel Cohen & Co ...	85, Grey Street ...	ditto	
*1874	Bose, Lokenath ...	Senior 6th class Clerk, Upper Division, Office of Secretary to the Government of India, Military Department.	6, Esplanade, East ...	ditto	
1875	Bose, Manmatha Mohan ...	Head Master and Lecturer, General Assembly's Institution.	Cornwallis Square ...	ditto	
1876	Bose, Manmatha Nath ...	Clerk, Comptroller-General's Office ...	The Treasury ...	ditto	
1877	Bose, Manmatha Nath ...	Clerk, J G Bagram & Co ...	14-2, Clive Row ...	ditto	
1878	Bose, Mon Mohun ...	Assistant, Office of Private Secretary to the Viceroy.	6, Council House Street ...	ditto	
*1879	Bose, Nanda Lal ...	Junior 5th class Clerk, Lower Division, Office of Secretary to the Government of India, Military Department.	6, Esplanade, East ...	ditto	
1880	Bose, Narain Chunder ...	Head Clerk, Chief Supply and Transport Office, Presidency District.	5, Strand ...	ditto	
1881	Bose, Naree Chunder ...	District Building Surveyor, Municipal Office.	Municipal Office ...	ditto	
1882	Bose, Poorna Chunder ...	Assistant, Petrocochino Brothers ...	4, Clive Ghat Street ...	ditto	
*1883	Bose, Prasanna Kumar ...	Clerk, Home Department ...	Home Department ...	ditto	
1884	Bose, Priya Nath ...	Accountant, Office of Examiner of Ordnance Factory Accounts in India.	1, Koila Ghat Street ...	ditto	
1885	Bose, Probod Chunder ...	Cashier, Grindlay & Co ...	11, Hastings Street ...	ditto	
1886	Bose, Probodh Chunder ...	Assistant, Shaw, Wallace & Co ...	20, Strand Road ...	ditto	
1887	Bose, Purna Chandro ...	2nd grade Accountant, Office of Examiner, P. W. Accounts, Bengal.	8, Lyons Range ...	ditto	
1888	Bose, Rajkrishna ...	Assistant to Director of Public Instruction, Bengal.	Writers' Buildings ...	ditto	
1889	Bose, Rhedoy Krishna ...	Assistant, Massey & Co ...	5, Clive Row ...	ditto	
*1890	Bose, Russicklal ...	Clerk, Office of Accountant-General, Public Works Department.	Imperial Secretariat Buildings	ditto	

1891	Bose, S	...	Proprietor, F. Kapp & Co ...	3, Humayon Place ...	ditto
1892	Bose, Sarrat Chunder	...	Clerk, Kinmond & Co ...	5, Garstin's Place ...	ditto
*1893	Bose, Satish Chunder	...	Assistant, Bengal Secretariat, Judicial, Political and Appointment Departments.	Writers' Buildings ...	ditto
1894	Bose, Satish Chunder	...	Assistant, Office of Inspector-General of Police, L. P.	Writers' Buildings ...	ditto
1895	Bose, Satish Chunder	...	Clerk, Walter, Locke & Co, Ld ..	4, Esplanade ...	ditto
1896	Bose, S C	...	Sanitary Inspector, District No. I, Municipal Office.	79, Cornwallis Street ...	ditto
1897	Bose, Siddesur	...	Accountant, Military Works, Office of Commanding Royal Engineer, Presidency District.	Fort William ...	ditto
1898	Bose, Siddesur	...	Accountant, Office of Government Examiner of Railway Accounts, E I R	E I R House ...	ditto
1899	Bose, Sreeram Chunder	...	Assistant, Government of India, Statistical Department.	7, Koila Ghat Street ...	ditto
1900	Bose, Sris Chandra	...	Overseer, 1st grade, Office of Electrical Engineer to the Government of Bengal.	58, Chowringhee Road ...	ditto
1901	Bose, Upendra Nath	...	Assistant, Bengal Secretariat, Financial Department.	Writers' Buildings ...	ditto
1902	Bose, Upendra Nath	...	Assistant, Turner, Morrison & Co ...	6, Lyons Range ...	ditto
1903	Burkatulla, Munshi	...	Assistant, Bengal Secretariat, Judicial, Political and Appointment Departments.	Writers' Buildings ...	ditto
1904	Burral, Hari Charan	...	Bill and Stock Broker ...	28, Ram Mohun Ghose's Lane	ditto
1905	Burral, Goburdhone	...	Clerk, National Bank of India, Ld.	104, Clive Street ...	ditto
*1906	Burral, Manick Lal	...	Junior 2nd class Clerk, Lower Division, Office of Secretary to the Government of India, Military Department.	6, Esplanade, East ...	ditto
1907	Buxy, Prosunno Coomar	...	Assistant, Board of Revenue, L P ...	2, Bankshall Street ...	ditto
1908	Byaack, Bharat Chunder	...	Clerk, Office of Pay Examiner, Military Accounts Department, E C	3, Koila Ghat Street ...	ditto
1909	Byaack, Hurry Mohan	...	Treasurer, Office of the Calcutta Port Commissioners.	Strand Road ...	ditto

No	Names.	Style or Calling.	Residence or place of business.	Religion.	Remarks.
	B				
1910	Bysack, Jogodanund ...	Assistant, Board of Revenue, L P ...	2, Bankshall Street ..	Hindu	
1911	Bysack, Lal Behari ...	Clerk, Office of Pay Examiner, Military Accounts Department, E C.	3, Koila Ghat Street ...	ditto	
1912	Bysack, Nando Lal ...	Assistant, Grossmann & Co ...	2, Fairlie Place ...	ditto	
1913	Bysack, Nanda Lal ...	Assistant, McLeod & Co ...	31, Dalhousie Square ...	ditto	
1914	Bysack, Nobin Chunder ...	Superintendent, Comptroller-General's Office.	The Treasury ...	ditto	
**1915	Bysack, Nritya Kissore ...	1st class Clerk, Office of Accountant-General, Military Department.	6, Esplanade Row, East ...	ditto	
	C				
1916	Chatterjee, A C ...	Assistant, F W Howse & Co ...	3, Lall Bazar ...	ditto	
1917	Chatterjee, Akshaya Kumar, M.A.	Professor, Ripon College ...	60, Mirzapore Street ...	ditto	
1918	Chatterjee, Ashutosh, M.A.	Professor, Sanskrit College ...	College Square ...	ditto	
1919	Chatterjee, Atal Bihary ...	Assistant, Bengal Secretariat, Municipal Department.	Writers' Buildings ...	ditto	
**1920	Chatterjee, Atul Chandra ...	6th class Clerk, Secretariat, Government of India, Public Works Department.	Imperial Secretariat Buildings	ditto	
1921	Chatterjee, Aukhoy Coomar	Clerk, Chartered Bank of India, Australia and China.	5, Council House Street ...	ditto	
1922	Chatterjee, Behari Lal ...	Assistant, McLeod & Co ...	31, Dalhousie Square ...	ditto	
1923	Chatterjee, Bhola Nath ...	2nd Assistant, Office of Military Secretary to the Viceroy.	Government House ...	ditto	
**1924	Chatterjee, Bhusan Chunder	Assistant, Office of Secretary to the Government of India, Legislative Department.	Legislative Department Office, 5, Esplanade, West.	ditto	
1925	Chatterjee, Bhut Nath ...	2nd class Assistant, Office of Controller of Military Accounts, E C, Supply and Transport Branch.	3, Koila Ghat Street ...	ditto	
**1926	Chatterjee, Dasu Kumar ...	Assistant, Office of Secretary to the Government of India, Department of Finance and Commerce.	Treasury Buildings ...	ditto	

1927	*Chatterjee, Debendra Nath*	Est. Clerk, Agent's Office, E I R.	E I R House ...	ditto
1928	Chatterjee, Doorga Churn ...	Assistant, Office of Calcutta Trades Association.	Dalhousie Institute ...	ditto
1929	Chatterjee, Doorga Dass ...	Assistant, Landale and Morgan ...	5, Mission Row ...	ditto
1930	Chatterjee, Gopal Chunder	Assistant, Anderson, Wright & Co ...	22, Strand ...	ditto
1931	Chatterjee, Gopal Chunder	Clerk, Audit Office, E I R ...	E I R House ...	ditto
1932	Chatterjee, Gopal Lal ...	Head Assistant, Bengal Office, Judicial, Political and Appointment Departments.	Writers' Buildings ...	ditto
1933	Chatterjee, Haran Chunder	Assistant, Office of Secretary to the Government of India, Department of Finance and Commerce.	Treasury Buildings ...	ditto
1934	Chatterjee, Hari Narain ...	Assistant, Harman & Co ...	12, Government Place ...	ditto
1935	Chatterjee, Hari Pada ...	License Inspector ...	Municipal Office ...	ditto
1936	Chatterjee, Heeralal ...	2nd grade Accountant, Office of Examiner of Ordnance and Clothing Branches.	Military Accounts Department Buildings, Koila Ghat Street.	ditto
1937	Chatterjee, Huri Dass ...	Cloth shop-keeper ...	Jugul Kissore Dass's Lane, Shooripara.	ditto
1938	Chatterjee, Jagodanand ...	2nd Clerk, Agent's Office, E I R ...	E I R House ...	ditto
1939	Chatterjee, Kali Nath ...	Assistant, O. Steel & Co ...	14, Old Court House Street ...	ditto
1940	Chatterjee, Kedar Nath ...	Clerk, Office of Chief Superintendent, Traffic Department, E I R.	E I R House ...	ditto
1941	Chatterjee, Krishnadhan ...	Assistant, Bengal Office, Judicial, Political and Appointment Departments.	Writers' Buildings ...	ditto
1942	Chatterjee, Kristo Lal ...	Assistant Master, Hare School ...	College Square ...	ditto
1943	Chatterjee, M N ...	Assistant, Birkmyre Brothers ...	6, Clive Row ...	ditto
1944	Chatterjee, Mohendra Chunder.	Head Assistant, Legal Remembrancer's Office.	High Court ...	ditto
1945	Chatterjee, Mohendro Lal	Clerk, Comptroller-General's Office...	The Treasury ...	ditto
1946	Chatterjee, Mohendro Lal	Assistant, George Henderson & Co ...	100, Clive Street ...	ditto
1947	Chatterjee, Monmotho Mohan.	Assistant, Board of Revenue, L P.	2, Bankshall Street ...	ditto

No.	Names.	Style or Calling.	Residence or place of business.	Religion.	Remarks.
	C				
1948	Chatterjee, Nanda Lal ...	Assistant, Board of Revenue, L P ...	2, Bankshall Street ...	Hindu	
1949	Chatterjee, Narain Chunder	Assistant, Turner, Morrison & Co ...	6, Lyons Range ...	ditto	
1950	Chatterjee, Narayan Chandra, B.A.	Head Master, S V S Vidyalaya ...	153, Harrison Road ..	ditto	
1951	Chatterjee, Narayan Das ...	Clerk, North British and Mercantile Insurance Office.	100, Clive Street ...	ditto	
1952	Chatterjee, Nibaran Chunder.	Head Assistant, Office of Inspector-General of Civil Hospitals and Sanitary Commissioner for Bengal.	Writers' Buildings ...	ditto	
1953	Chatterjee, Nogendro Chunder.	Assistant, Municipal Department, Bengal Secretariat.	Writers' Buildings ...	ditto	
1954	Chatterjee, Norendro Nath, B A.	Assistant, Office of Secretary to the Government of Bengal, Public Works Department.	Writers' Buildings ...	ditto	
1955	Chatterjee, Noresh Chunder	Assistant, Macneill & Co ...	2, Clive Ghat Street ...	ditto	
1956	Chatterjee, Promoda Churn	Accountant, Chief Supply and Transport Office, Presidency District.	5, Strand ...	ditto	
1957	Chatterjee, P C ...	Supervisor, District No III. District Engineer's Office, Calcutta Corporation.	10, Sudder Street ...	ditto	
1958	Chatterjee, Poorna Chandra	Inhabitant	Sukea's Street, Bar Simla ..	ditto	
1959	Chatterjee, Priya Nath, ...	Clerk, Comptroller-General's Office ..	The Treasury ...	ditto	
1960	Chatterjee, Probodh Chandra	Assistant Accountant, Office of the Calcutta Port Commissioners.	Strand Road ...	ditto	
1961	Chatterjee, Radhica Nath	Clerk, Office of Pay Examiner, Military Accounts Department, E C.	3, Koila Ghat Street ...	ditto	
1962	Chatterjee Raja Ram ...	4th class Assistant, Office of Controller of Military Accounts, E C, Supply and Transport Branch.	3, Koila Ghat Street ...	ditto	
1963	Chatterjee, Rakhal Dass ...	Assistant, Bengal Secretariat, Municipal Department.	Writers' Buildings ...	ditto	

1964	Chatterjee, Sarat Chunder ...	Assistant, Bengal Office, Judicial, Political and Appointment Departments.	Writers' Buildings	...	ditto
1965	Chatterjee, Sarat Chunder ...	Building Surveyor, District No. II ...	Municipal Office	...	ditto
1966	Chatterjee, Saroda Charan...	Assistant, Government of India, Statistical Department	7, Koila Ghat Street	...	ditto
19 7	Chatterjee, Saroda Prosad...	Inhabitant	Sukea's Street	...	ditto
1968	Chatterjee, S C ...	Accountant, Accounts Department ...	Municipal Office	...	Christian
*.*1969	Chatterjee, Shama Churn ...	1st class Clerk, Office of Accountant-General, Military Department.	6, Esplanade Row, East	...	Hindu
1970	Chatterjee, Tara Prosonno	Assistant, Bengal Secretariat, Public Works Department.	Writers' Buildings	...	ditto
1971	Chatterjee, Tara Prosonno	Assistant, Turner, Morrison & Co ...	6, Lyons Range	...	ditto
1972	Chatterjee, Upendra Chandra.	Junior 4th Class Clerk, Lower Division, Office of Secretary to the Government of India, Military Department.	6, Esplanade, East	...	ditto
*.*1973	Chatterjee, Upendra Nath	Assistant, Legislative Department, Government of India.	5, Esplanade, West	...	ditto
1974	Chatterjee, Woomesh Chandra.	Education Department, Presidency College.	College Square	...	ditto
1975	Chattoraj, Kali Prosanno, M.A.	Professor, City College ...	13, Mirzapore Street	...	ditto
*.*1976	Chiranji Lall ...	Assistant, Office of Secretary to the Government of India, Revenue and Agricultural Department, General Branch.	Imperial Secretariat Buildings		ditto
1977	Chowdhry, A C ...	Assistant, Landale and Morgan ...	5, Mission Row	...	ditto
*.*1978	Chowdhry, Gyan Chunder ..	Head Assistant, Bengal Office, Judicial, Political and Appointment Departments.	Writers' Buildings	...	ditto
1979	Chowdhry, J ...	Sanitary Inspector, District No. II, Municipal Office.	Municipal Office	...	ditto
1980	Chowdhry, Kirti Chunder	Cloth shop-keeper	204, Cornwallis Street	...	ditto
1981	Chowdhry, Nibaran Chunder.	Clerk, Office of Controller of Military Accounts, E C, Accounts Branch.	3, Koila Ghat Street	...	ditto

No.	Names.	Style or Calling.	Residence or place of business.	Religion.	Remarks.
	C				
1982	Chowdhry, Prosonno Coomar	Inspector, Contractors' Accounts, Office of Superintendent, Government Printing, India.	8, Hastings Street ...	Hindu	
*1983	Chowdhry, Surjya Kumar (Rai Bahadur).	Superintendent, Office of Secretary to the Government of India, Finance and Commerce Department.	Treasury Buildings ...	ditto	
1984	Chuckerbutty, A C ...	Accountant, W Newman & Co ...	4, Dalhousie Square ...	ditto	
1985	Chuckerbutty, Ashutosh ...	Assistant, J Thomas & Co ...	8, Mission Row ...	ditto	
1986	Chuckerbutty, B C ...	Head Clerk, John Dewar & Sons, Ld	10, Haro Street ...	ditto	
1987	Chuckerbutty, Bhut Nath ...	2nd Superintendent of Works, Office of the Calcutta Port Commissioners.	Strand Road ...	ditto	
1988	Chuckerbutty, Debendro Nath.	1st grade Accountant, Office of Examiner, P. W. Accounts, Bengal.	8, Lyons Range ...	ditto	
1989	Chuckerbutty, Gogan Ch.	Assistant, Baptist Mission Press ...	41, Lower Circular Road ...	ditto	
1990	Chuckerbutty, Hari Dyal ...	Assistant, George Henderson & Co...	100, Clive Street ...	ditto	
1991	Chuckerbutty, J ...	Sanitary Inspector, District, No. III, Municipal Office.	Municipal Office ...	ditto	
1992	Chuckerbutty, Jogendra Nath.	Book-keeper, Burn & Co ...	7, Hastings Street ...	ditto	
1993	Chuckerbutty, Jadub Chunder.	Teacher, Government School of Art	28, Chowringhee Road ...	ditto	
1994	Chuckerbutty, Kali Prosunno.	Assistant, Board of Revenue, L. P.	2, Bankshall Street ...	ditto	
1995	Chuckerbutty, Kally Dass ...	Assistant, Mackinnon, Mackenzie & Co	16, Strand ...	ditto	
1996	Chuckerbutty, Lal Gopal, M.A.	Professor, Ripon College ...	60, Mirzapore Street ...	ditto	
*1997	Chuckerbutty, Manmatha Nath.	Clerk, Home Department ...	Home Department ...	ditto	
1998	Chuckerbutty, Manmohan	Assistant Superintendent, Accountant-General's Office, Bengal	The Treasury ...	ditto	
1999	Chuckerbutty, Mohendra Nath.	District Building Surveyor, District No. I, Municipal Office.	Municipal Office ...	ditto	

2000	Chuckerbutty, Nishakanta...	Assistant, Bengal Secretariat, Municipal Department.	Writers' Buildings	...	ditto
2001	Chuckerbutty, N L ...	Assistant, F W Howse & Co ...	3, Lall Bazar	...	ditto
2002	Chuckerbutty, Panchcowry	Head Clerk, Doveton College ...	41, Free School Street	...	ditto
2003	Chuckerbutty, R C ...	Sanitary Inspector, District No. I, Municipal Office.	79, Cornwallis Street	...	ditto
2004	Chuckerbutty, Rakhaldas	Education Department, Presidency College.	College Square	...	ditto
2005	Chuckerbutty, Sita Nath ...	Assistant, Begg, Dunlop & Co ...	12, Mission Row	...	ditto
2006	Chuckerbutty, Syama Charan.	Assistant, Bengal Secretariat, General and Revenue Departments.	Writers' Buildings	...	ditto
2007	Chuckerbutty, Upendra Nath.	P W Inspector, Office of the Calcutta Port Commissioners.	Strand Road	...	ditto
2008	Chuckerbutty, Vanamali, M.A.	Lecturer, Sanskrit College ...	College Square	...	ditto
2009	Chunder, Girish Chunder ...	Treasurer, Calcutta Collectorate ...	3, Charnock Place	...	ditto
2010	Chunder, Gobinda Lall ...	Clerk, Comptroller-General's Office	The Treasury	...	ditto
2011	Chunder, Nundolall ...	Assistant, Finlay, Muir & Co ...	1, Clive Street	...	ditto
2012	Chunder, N N ...	Book-keeper, Marshall, Sons & Co, Ld	99, Clive Street	...	ditto
2013	Chunder, Upendra Nath ...	Assistant, Office of Commissioner of Excise and Salt, Bengal.	2, Bankshall Street	...	ditto
2014	Cowar, A P ...	Sanitary Inspector, Municipal Office	26, Cornwallis Street	...	ditto
2015	Cowasji, Edulji Bharucha	Proprietor, C Ardesher & Co ...	178, Dhurumtolla Street	...	Parsee
2016	Cowasji, K ...	Chief Draftsman, Chief Engineer's Office.	4, Corporation Street	...	Zoroastrian
2017	Cowasji, M D ...	Assistant, Shaw, Wallace & Co ...	20, Strand Road	...	ditto
2018	Dalal, Madan Mohan ...	Assistant Accountant, Jessop & Co, Ld	93, Clive Street	...	Hindu
2019	Dass, Ambica Churn ...	Clerk, Office of Pay Examiner, Military Accounts Department, E C.	3, Koila Ghat Street	...	ditto
2020	Dass, Annada Prosad ...	Assistant, Shaw, Wallace & Co ...	20, Strand Road	...	ditto
2021	Dass, Basanto Kumar ...	Deputy Inspector of Excise, Calcutta Collectorate.	3, Charnock Place	...	ditto
2022	Dass, Behary Lall ...	Inhabitant ...	Kopalcotollah	...	ditto

No.	Names.	Style or Calling.	Residence or place of business.	Religion.	Remarks.
	O				
2023	Dass, Benode Behary ...	Inhabitant ...	16, Sunker Ghose's Lane ...	Hindu	
2024	Dass, Bhoyrub Chunder ...	Clerk, Commercial Union Assurance Co, Ld.	29, Dalhousie Square ...	ditto	
*2025	Dass, Fatic Chunder ...	Clerk, Office of Accountant-General, Public Works Department.	Imperial Secretariat Buildings	ditto	
2026	Dass, Girish Chunder, B.A. ..	Assistant, Office of Secretary to the Government of Bengal, Public Works Department.	Writers' Buildings ...	ditto	
2027	Dass, Gopal Chunder, I ...	Clerk, Correspondance Branch, Surveyor-General's Office.	13, Wood Street ...	ditto	
2028	Dass, Gopaul Chunder ...	Clerk, Home Department ...	Home Department ...	ditto	
2029	Dass, Gopi Chand ...	Assistant, Board of Revenue, L P ...	2, Bankshall Street ...	ditto	
2030	Dass, Guru Prosad ...	Assistant, Mackintosh, Burn & Co ...	8, Esplanade, East ...	ditto	
*2031	Dass, Hari Nath ...	5th class Clerk, Secretariat, Government of India, Public Works Department.	Imperial Secretariat Buildings	ditto	
2032	Dass, Hari Pada ...	Assistant, *Indian Planting and Gardening*.	5-1, Council House Street ...	ditto	
2033	Dass, Jugger Nath ...	Firm of Jugger Nath Dass & Co ...	97, Mooktaram Babu's Street	ditto	
2034	Dass, Kailas Chunder ...	Accountant, Office of Superintendent, Government Printing, India.	8, Hastings Street ...	ditto	
2035	Dass, Kailas Chunder ...	Superintendent, Office of Accountant-General, Bengal.	The Treasury ...	ditto	
2036	Dass, Kali Prosanno, B.A.	Lecturer, Bethune College ...	181, Cornwallis Street ...	Brahmo	
2037	Dass, Kristo Mohun ...	Inhabitant ...	Kopaleetollah ...	Hindu	
2038	Dass, Lookhi Narain ...	Clerk, Mercantile Bank of India, Ld	28, Dalhousie Square ...	ditto	
2039	Dass, Mohindra Nath ...	Cashier, Watson and Summers ...	3-1, Wellesley Place ...	ditto	
2040	Dass, Nobo Coomar ...	Accountant, Alex. Brault ...	3, Waterloo Street ...	ditto	
2041	Dass, Nritya Lall ...	License Inspector, Municipal Office...	Municipal Office ...	ditto	
2042	Dass, Nund Lal ...	Managing Proprietor, K Dasch & Co	54, Wellington Street ...	ditto	

2043	Dass, Peary Mohan	...	Hackney Carriage Inspector, Calcutta Corporation.	Municipal Office	...	ditto
2044	Dass, Prasanna Kumar	...	Assistant, Bengal Secretariat, General and Revenue Departments.	Writers' Buildings	...	ditto
2045	Dass, Radha Bullub	...	Assistant, Manton & Co ...	13, Old Court House Street	...	ditto
2046	Dass, Radha Bullub	...	Clerk, Controller of Stores' Office, E I R.	E I R House	...	ditto
2047	Dass, Rakhal Chunder	...	License Inspector ...	Municipal Office	...	ditto
2048	Dass, Roma Nath	...	Assistant, Walker, Goward & Co ...	32, Jackson's Ghat Street	...	ditto
2049	Dass, Shib Chunder	...	Junior 3rd class Clerk, Lower Division, Office of Secretary to the Government of India, Military Department.	6, Esplanade, East	...	ditto
2050	Dass, S L	...	Supervisor, District No. III, District Engineer's Office, Calcutta Corporation.	10, Sudder Street	...	Christian
2051	Dass, Soshi Bhusan	...	Assistant, Bengal Secretariat, Judicial, Political and Appointment Departments.	Writers' Buildings	...	Hindu
2052	Dass, Sreenath	...	Overseer, Bengal Secretariat Press ...	Writers' Buildings	...	ditto
2053	Dass, Surendra Chunder	...	License Inspector ...	Municipal Office	...	ditto
2054	Dass, Suval Krishna	...	Assistant Master, Hindu School ...	College Square	...	ditto
2055	Dass, Tarini Charan	...	Junior 2nd Class Clerk, Lower Division, Office of Secretary to the Government of India, Military Department.	6, Esplanade, East	...	ditto
2056	Dass Gupta, Hem Chandra		Education Department, Presidency College.	College Square	...	ditto
2057	Datta Sharma, Pandeya Umapati, B.A.		Principal, S. V. S. Vidyalaya ...	153, Harrison Road	...	ditto
2058	Daw, Girish Chunder	...	Assistant, Bengal Secretariat, Public Works Department.	Writers' Buildings	...	ditto
2059	Daw, Sarat Chunder	...	Inspector, Suburban Drainage Department, Municipal Office.	4, Corporation Street	...	ditto
2060	Deb, Ashu Tosh	...	License Inspector ...	Municipal Office	...	ditto

No.	Names	Style or Calling	Residence or place of business.	Religion.	Remarks.
	D				
2061	Deb, Samarendra Krishna...	License Inspector	Municipal Office ...	Hindu	
2062	Deb, Satya Priya ...	Assistant, Board of Revenue, L. P. ...	2, Bankshall Street ...	ditto	
*2063	Dewan Chand ...	Clerk, Home Department ...	Home Department ...	ditto	
2064	Dey, Aubinash Chunder ...	Assistant Treasurer, E I R ...	E I R House ...	ditto	
2065	Dey, Audhor Chunder ...	Assistant Accountant, Jessop & Co, Ld	93, Clive Street ...	ditto	
2066	Dey, Bepin Behari ...	Accountant, Office of Executive Engineer, 2nd Calcutta Division.	Writers' Buildings ...	ditto	
2067	Dey, Bireswar ...	Assistant, Office of Inspector-General of Civil Hospitals and Sanitary Commissioner for Bengal.	Writers' Buildings ...	ditto	
2068	Dey, Braja Nath ...	Superintendent, Metropolitan Institution.	22, Sunkur Ghose's Lane, Bar Simla.	ditto	
2069	Dey, Chuni Lall ...	Head Clerk, Surveyor-General's Office, Correspondence Branch.	18, Wood Street ...	ditto	
*2070	Dey, Gajendra Nath, B.A. ...	Assistant, Bengal Secretariat, General and Revenue Departments.	Writers' Buildings ...	ditto	
2071	Dey, Girish Chunder ...	Assistant Assessor, Municipal Office	Municipal Office ...	ditt	
2072	Dey, Gour Gopal ...	Head Clerk, Office of Examiner, Public Works Accounts, Bengal.	8, Lyons Range ...	ditto	
2073	Dey, Jogesh Chunder ...	Assistant, Finlay, Muir & Co ...	1, Clive Street ...	ditto	
2074	Dey, Kasipati ...	Accountant, 3rd grade, Office of Accountant-General, Military Department.	2, Esplanade Row, East ...	ditto	
2075	Dey, Mohendra Lal ...	Clerk, Office of Comptroller-General and Comptroller, India Treasuries.	The Treasury ...	ditto	
2076	Dey, Manik Lal ...	Cashier, Sun Life Office ...	7, Council House Street ...	ditto	
*2077	Dey, Matilal ...	Jr. 2nd Class Clerk, Lower Division, Office of Secretary to the Government of India, Military Department.	6, Esplanade, East ...	ditto	
2078	Dey, M L ...	Proprietor, M S Dey & Co ...	46, Radha Bazar Street ...	ditto	

2079	*Dey, Nando Lal*	...	Overseer, Office of Executive Engineer, 1st Calcutta Division.	Writers' Buildings ...	ditto
**2080	Dey, N N	...	Assistant, Office of Secretary to the Government of India, Revenue and Agricultural Department, Forest Branch.	Imperial Secretariat Buildings	ditto
2081	Dey, Parbutty Churn	...	Assistant, Finlay, Muir & Co ...	1, Clive Street ...	ditto
2082	Dey, Pran Kissen	...	Rent Collector, Office of the Calcutta Port Commissioners.	Strand Road ...	ditto
2083	Dey, Purna Chunder	...	Assistant, Balmer, Lawrie & Co ...	103, Clive Street ...	ditto
2084	Dey, Purna Chunder	...	Partner, G C Dey & Co ...	128, Lower Circular Road ...	ditto
2085	Dey, Shyam Kumar	...	Assistant, Arlington & Co ...	5, Dalhousie Square ...	ditto
2086	Dey, Siddheswar	...	2nd Clerk, Presidency Commissioner's Office.	3, Charnock Place ...	ditto
**2087	Dey, Soobul Chunder	...	6th Class Clerk, Secretariat, Government of India, P W D.	Imperial Secretariat Buildings	ditto
2088	Dey, Soorendra Mohun	...	Proprietor, Soorendra Mohun Dey & Co.	18, Rajah Woodmunt's Street	ditto
2089	Dey, Suresh Chunder	...	Assistant, Office of Commissioner of Excise and Salt, Bengal.	2, Bankshall Street ...	ditto
2090	Dey, Syama Churn	...	Supervisor, Office of Executive Engineer, 2nd Calcutta Division.	Writers' Buildings ...	ditto
2091	Dey, Troylucko Nath	...	Clerk, Comptroller-General's Office ...	The Treasury ...	ditto
**2092	Dey, Upendra Nath	...	Assistant, Bengal Secretariat, Judicial, Political and Appointment Departments.	Writers' Buildings ...	ditto
2093	Dhur, A T	...	Assistant, Shrager Brothers ...	28, Dalhousie Square ...	ditto
2094	Dhur, Bepin Vehary	...	Treasurer, Alliance Bank of Simla, Ld	8, Council House Street ...	ditto
2095	Dhur, Chundi Churn	...	Cashier, Licensed Measurers' Department, Bengal Chamber of Commerce.	2, Clive Street ...	ditto
2096	Dhur, Jogendro Nath	...	Assistant, Graham & Co ...	9, Clive Street ...	ditto
**2097	Dhur, Kangalee Churn	...	7th Class Clerk, Office of Secretary to the Government of India, Public Works Department.	Imperial Secretariat Buildings	ditto
2098	Dhur, Keshub Lall	...	Sole Proprietor, Kanye Lall Dhur & Son.	40, Old China Bazar Street ...	ditto

No.	Names.	Style or Calling.	Residence or place of business.	Religion.	Remarks.
	D				
2099	Dhur, Nitra Lal ...	Accountant, Office of Pay Examiner, Military Accounts Department, E C.	3, Koila Ghat Street ...	Hindu	
2100	Dhur, Nritto Lall ...	Accountant, Office of Controller of Military Accounts, E C, Accounts Branch.	3, Koila Ghat Street ...	ditto	
2101	Dhur, Parvati Churn ...	Assistant, Government of India, Statistical Department.	7, Koila Ghat Street ...	ditto	
2102	Dhur, Upendra Nath ...	Assistant, Board of Revenue, L P ...	2, Bankshall Street ...	ditto	
2103	Dutt, Ambika Churn ...	Junior 3rd Class Clerk, Lower Division, Office of Secretary to the Government of India, Military Department.	6, Esplanade, East ...	ditto	
2104	Dutt, Amirto Lall ...	Assistant, Board of Revenue, L P ...	2, Bankshall Street ...	ditto	
2105	Dutt, Barun Chandra ...	Professor, General Assembly's Institution.	Cornwallis Square ...	Christian	
2106	Dutt, Chundi Churn ...	Clerk, Office of Comptroller-General and Comptroller, India Treasuries.	The Treasury ...	Hindu	
2107	Dutt, Chundi Churn ...	Assistant, Kettlewell, Bullen & Co ...	21, Strand Road ...	ditto	
2108	Dutt, D B ...	Assistant, British American Tobacco Company, Ld.	95, Clive Street ...	ditto	
2109	Dutt, Debendra Nath ...	Assistant, Office of Secretary to the Government of India, Finance and Commerce Department.	Treasury Buildings ...	ditto	
2110	Dutt, Dino Nath ...	Superintendent, Comptroller-General's Office.	The Treasury ...	ditto	
2111	Dutt, Dwarka Nath ...	Merchant ...	Colootollah ...	ditto	
2112	Dutt, Dwijan Chunder ...	Suit Superintendent, Collector's Department	Municipal Office ...	Christian	
2113	Dutt, Ganesh Chunder ...	Assistant, W. Leslie & Co. ...	2, Chowringhee ...	ditto	
2114	Dutt, Gopi Chand ...	3rd grade Accountant, Office of Controller of Military Accounts, E C.	3, Koila Ghat Street ...	ditto	
2115	Dutt, Grish Chunder ...	Assistant, W N Bhose & Co ...	63, Ezra Street ...	ditto	
2116	Dutt, Hari Das ...	Clerk, Chartered Bank of India, Australia and China.	5, Council House Street ...	ditto	

2117	Dutt, Hem Bhusan	...	Merchant	...	22, Ghose's Lane	... ditto
2118	Dutt, Hem Nath	...	Clerk, Surveyor-General's Office, Correspondence Branch.		13, Wood Street	... ditto
*2119	Dutt, Hurry Churn	...	Junior 3rd class Clerk, Lower Division, Office of Secretary to the Government of India, Military Department.		6, Esplanade, East	... ditto
2120	Dutt, Jadu Nath	...	Assistant, Mackintosh, Burn & Co	...	8, Esplanade, East	... ditto
2121	Dutt, J N	...	Analyst, Municipal Office	...	7, Sudder Street	... ditto
2122	Dutt, Jogendra Chunder	...	Inhabitant	...	Ramjan Ostagar's Lane, Nimtolla.	ditto
2123	Dutt, Jogendra Nath	...	Head Clerk, James Simpson & Co, Ld.		32-1, Dalhousie Square	... ditto
2124	Dutt, Jotish Chunder	...	License Inspector	...	Municipal Office	... ditto
2125	Dutt, K	...	Superintendent, Office of Accountant-General, Bengal.		The Treasury	... ditto
2126	Dutt, K B	...	Assistant, Framjee & Sons	...	11, Bentinck Street	... ditto
2127	Dutt, Kali Churn	...	Assistant, McLeod & Co	...	31, Dalhousie Square	... ditto
*2128	Dutt, Kanai Lall	...	Assistant, Office of Secretary to the Government of India, Finance and Commerce Departments.		Treasury Buildings	... ditto
2129	Dutt, Kush Chandra	...	Assistant, G. F. Kellner & Co	...	32, Chowringhee	... ditto
2130	Dutt, Nafur Chunder	...	Assistant, Office of Secretary to the Government of India, Finance and Commerce Department.		Treasury Buildings	... ditto
2131	Dutt, Nagendra Nath	...	Clerk, J. G. Bagram & Co	...	14-2, Clive Row	... ditto
2132	Dutt, Narayan Chunder	...	Assistant, G. Atherton & Co	...	14, Clive Street	... ditto
2133	Dutt, Nemye Chand	...	Assistant, George Henderson & Co	...	100, Clive Street	... ditto
2134	Dutt, Netailal	...	Assistant, Board of Revenue, L P	...	2, Bankshall Street	... ditto
2135	Dutt, Nibaran Chunder	...	Merchant	...	Chorebagan	... ditto
2136	Dutt, Poolin Behary	...	Assistant, Moran & Co	...	3, Mangoe Lane	... ditto
2137	Dutt, Roma Nath	...	Assistant, Balmer, Lawrie & Co	...	103, Clive Street	... ditto
*2138	Dutt, Satish Chunder	...	Assistant, Bengal Office, Municipal Department.		Writers' Buildings	... ditto

No.	Names.	Style or Calling.	Residence or place of business.	Religion.	Remarks.
	D				
2139	Dutt, Sham Chand ...	Despatcher, Bengal Coal Co, Ld ...	5, Fairlie Place ...	Hindu	
2140	Dutt, Shoshi Bhushan ...	Record-keeper, Audit Office, E I R	E I R House ...	ditto	
2141	Dutt, Surendro Nath ...	Clerk, Chartered Bank of India, Australia and China.	5, Council House Street ...	ditto	
2142	Dutt, Sures Chandra ...	Assistant, Apear & Co ...	19, Radha Bazar Street ...	ditto	
2143	Dutt, Suresh Chunder ...	Assistant, Board of Revenue, L P ...	2, Bankshall Street ...	ditto	
2144	Dutt, Toolsee Dass ...	Merchant ...	Coloptolla ...	ditto	
2145	Dutt, Upendra Nath ...	Building Surveyor, District No. III	Municipal Office ...	ditto	
2146	Dwarka Pershad (Rai Sahib)	Supervisor, Military Works, Office of Commanding Royal Engineer, Presidency District.	Fort William ...	ditto	
	F				
**2147	Fateh Din ...	Clerk, Secretariat, Government of India, P W D.	Imperial Secretariat Buildings	Muhammadan	
2148	Framjee, R ...	Assistant, Framjee and Sons ...	11, Bentinck Street ...	Parsee	
**2149	Fuslul Kurim, Maulvi ...	Assistant, Bengal Office, Judicial, Political and Appointment Departments.	Writers' Buildings ...	Muhammadan	
	G				
2150	Gangooly, Amar Nath ...	3rd grade Accountant, Office of Examiner, Public Works Accounts, Bengal.	8, Lyons Range ...	Hindu	
2151	Gangooly, Aukhoy Kumar	4th Class Assistant, Office of Controller of Military Accounts, E. C., Supply and Transport Branch.	3, Koila Ghat Street ...	ditto	
2152	Gangooly, Bhagabutty Churn.	Sub-Engineer, Office of Executive Engineer, 2nd Calcutta Division.	Writers' Buildings ...	ditto	
2153	Gangooly, Dayamay ...	Assistant, Office of Secretary to the Government of India, Finance and Commerce Departments.	Treasury Buildings ...	ditto	

2154	Gangooly, Debendro Nath...	Head Clerk, Meugens, King and Simson.	102, Clive Street	...	ditto
2155	Gangooly, Jogendranath ..	Clerk, Chartered Bank of India, Australia and China.	5, Council House Street	...	ditto
2156	Gangooly, Kali Kumar ...	Assistant to Director of Public Instruction, Bengal.	Writers' Buildings	...	ditto
2157	Gangooly, Makhan Lall ...	Sub-Assessor, Municipal Office ...	Municipal Office	...	ditto
2158	Gangooly, Mohendro Nath	Clerk, Commercial Union Assurance Co, Ld.	29, Dalhousie Square	...	ditto
*2159	Gangooly, M L ...	Clerk, Foreign Office ...	Esplanade, West	...	ditto
2160	Gangooly, Nagendra Nath ..	Sub-Assessor, Municipal Office ...	Municipal Office	...	ditto
2161	Gangooly, Priya Lal, B.A ...	1st Assistant, Office of Military Secretary to the Viceroy.	Government House	...	ditto
2162	Gangooly, Procash Chunder	Gate Officer, Office of the Calcutta Port Commissioners.	Strand Road	...	ditto
*2163	Gangooly, Ramani Mohun	Clerk, Home Department ...	Home Department	...	ditto
2164	Gangooly, Sarat Chunder ..	Clerk, Gillanders, Arbuthnot & Co ...	8, Clive Street	...	ditto
2165	Gangooly, Surendra Nath...	4th class Assistant, Office of Controller of Military Accounts, E C, Supply and Transport Branch.	3, Koila Ghat Street	...	ditto
2166	Gholam Rahman, Shaikh ...	Supervisor, Office of Executive Engineer, 1st Calcutta Division	Writers' Buildings	...	Muhammadan
2167	Ghosal, Nocool Chunder ...	4th class Assistant, Office of Controller of Military Accounts, E C, Supply and Transport Branch.	3, Koila Ghat Street	...	Hindu
2168	Ghosal, Radhikapodo ...	Assistant Accountant, Audit Department, E I R.	E I R House	...	ditto
2169	Ghosal, Raghunath ...	Clerk, Pelican and British Empire Life Office.	12, Dalhousie Square	...	ditto
2170	Ghosal, Sarat Kumar ...	Assistant Examiner, Office of Pay Examiner, Military Accounts Department, E C.	3, Koila Ghat Street	...	ditto
2171	Ghosal, Sat Cori ...	Clerk, Walter, Locke & Co, Ld ...	4, Esplanade	...	ditto
2172	Ghose, Abinash Chunder ...	Deputy Examiner, Office of Controller of Military Accounts, E C.	3, Koila Ghat Street	...	ditto

No.	Names	Style or Calling.	Residence or place of business.	Religion.	Remarks.
	G				
2173	Ghose, Apoorva Krisno, M.A.	Head Assistant, Bengal Secretariat, Revenue Department.	Writers' Buildings ...	Hindu	
2174	Ghose, Ashutosh ...	Assistant, Nicholson & Co ...	14, Old Court House Lane ...	ditto	
2175	Ghose, Atul Krishna ...	Assistant, Board of Revenue, L P ...	2, Bankshall Street ...	ditto	
2176	Ghose, Avinash Chunder ...	Jeweller ...	169, Cornwallis Street ...	ditto	
2177	Ghose, Bama Charan ...	Treasurer, E I R ...	E I R House ...	ditto	
2178	Ghose, Bepin Behary ...	Assistant, Office of Inspector-General of Police, L P.	Writers' Buildings ...	ditto	
2179	Ghose, Charu Chunder ...	Assistant, Bengal Secretariat, Municipal Department.	Ditto ...	ditto	
2180	Ghose, Charu Chunder ...	Head Clerk, Registry Office ...	Ditto ...	ditto	
2181	Ghose, Chundy Churn ...	Assistant, Mackinnon, Mackenzie & Co	16, Strand ...	ditto	
2182	Ghose, Debendronath ...	Bullion Superintendent, Calcutta Mint	47, Strand Road, North ...	ditto	
2183	Ghose, Debendro Nath ...	Assistant, Government of India, Statistical Department.	7, Koila Ghat Street ...	ditto	
2184	Ghose, Gopal Chunder ...	Assistant, Bengal Secretariat, Public Works Department.	Writers' Buildings ...	ditto	
2185	Ghose, Gopal Chunder ...	Superintendent, Comptroller-General's Office.	The Treasury ...	ditto	
2186	Ghose, Gopeenath ...	Assistant Cashier and Cash-keeper, Bank of Bengal.	Strand ...	ditto	
2187	Ghose, Gynendra Nath ...	Head Clerk, Alliance Bank of Simla, Limited.	8, Council House Street ...	ditto	
2188	Ghose, Hari Churn ...	Clerk, Chief Engineer's Office, E I R	E I R House ...	ditto	
2189	Ghose, Haridas ...	Assistant, Harman & Co ...	12, Government Place ...	ditto	
2190	Ghose, Haridas ...	2nd Clerk, Arsenal Office ...	Fort William ...	ditto	
2191	Ghose, Heera Lall ...	Assistant, Mackinnon, Mackenzie & Co.	16, Strand ...	ditto	
2192	Ghose, Hem Chunder ...	Assistant, McLeod & Co ...	31, Dalhousie Square ...	ditto	
2193	Ghose, Henry A ...	Merchant, Henry Ghose & Co ...	3-4, Hare Street ...	Christian	
2194	Ghose, Hira Lall ...	Accountant, Martin & Co. ...	Jackson House ...	Hindu	

2195	Ghose, Jogendro Narayan		Clerk, Ernsthausen, Ld	...	9, Clive Row	... ditto
**2196	Ghose, Jyotish Chandra	...	Jr 4th Class Clerk, Lower Division, Office of Secretary to the Government of India, Military Department		6, Esplanade, East	... ditto
2197	Ghose, Kedar Nath	...	Cashier, Grand Hotel	...	16, Chowringhee	... ditto
2198	Ghose, Khirode Chunder	...	Clerk, Audit Office, E I R	...	E I R House	... ditto
2199	Ghose, Kiran Chunder	...	Partner, Dwarkin and Son	...	267, Bowbazar Street	... ditto
**2200	Ghose, K L	...	Clerk, Foreign Office	...	Esplanade, West	... ditto
2201	Ghose, Lall Behary	...	Assistant, Mackinnon, Mackenzie & Co.		16, Strand	... ditto
**2202	Ghose, M L	...	Clerk, Foreign Office	...	Esplanade, West	... ditto
2203	Ghose, Monmotho Nath	...	Assistant, Office of Private Secretary to the Viceroy.		6, Council House Street	... ditto
2204	Ghose, Narain Chander	...	Assistant, Mackinnon, Mackenzie & Co		16, Strand	... ditto
2205	Ghose, Nava Krishna, B.A.		Head Clerk, Office of Protector of Emigrants and Superintendent of Emigration.		55, Chowringhee Road	... ditto
2206	Ghose, Nibaran Chunder	...	Head Clerk, Department of Land Records and Agriculture, Bengal.		Writers' Buildings	... ditto
2207	Ghose, Nilprasanna	...	Accountant, Office of Government Examiner of Railway Accounts, P W D.		E I R House	... ditto
2208	Ghose, Nogendro Kissen	...	Bullion Superintendent, Calcutta Mint.		47, Strand Road, North	... ditto
2209	Ghose, Nogendra Nath	...	Accountant, James Simpson & Co, Ld		32-1, Dalhousie Square	... ditto
2210	Ghose, Panchkari	...	Accountant, Office of Government Examiner of Railway Accounts, P W D.		E I R House	... ditto
2211	Ghose, Priya Nath	...	Assistant, Office of Secretary to the Government of India, Finance and Commerce Department.		Treasury Buildings	... ditto
2212	Ghose, Probode Chunder	...	Assistant, Finlay, Muir & Co	...	1, Clive Street	... ditto
2213	Ghose, Prosunno Kali	...	Assistant, Board of Revenue, L P		2, Bankshall Street	... ditto
2214	Ghose, Radhanath	...	Draftsman, Jessop & Co, Ld	...	93, Clive Street	... ditto

No	Names.	Style or Calling.	Residence or place of business.	Religion.	Remarks.
	G				
2215	Ghose, Rajendra Nath ...	Assistant, Board of Revenue, L P	2, Bankshall Street ...	Hindu	
2216	Ghose, Rajendro Lall ...	Clerk, Calcutta Mint ...	47, Strand Road, North ...	ditto	
2217	Ghose, Ramoni Mohun ...	Head Clerk, Office of Inspector-General of Registration, Bengal.	Writers' Buildings ..	ditto	
2218	Ghose, Ram Taran ...	Clerk, Gillanders, Arbuthnot & Co	8, Clive Street ...	ditto	
2219	Ghose, Richard S ...	Partner, Henry Ghose & Co ...	3 & 4, Hare Street ...	Christian	
2220	Ghose, Roma Prosunno ...	Superintendent, Comptroller-General's Office.	The Treasury ...	Hindu	
2221	Ghose, Russick Lall ...	Assistant, Bengal Secretariat, P W D	Writers' Buildings ...	ditto	
2222	Ghose, Sadanunda ...	Head Examiner, Audit Office, E I R	E I R House ...	ditto	
2223	Ghose, Sasi Bhushon ...	Assistant Superintendent, Accountant-General's Office, Bengal.	The Treasury ...	ditto	
2224	Ghose, S B ...	Assistant Analyst, Municipal Office ...	7, Sudder Street ...	ditto	
2225	Ghose, S C ...	Assistant Traffic Manager, E I R ...	E I R House ...	ditto	
2226	Ghose, Shoshee Bhoosan ...	Assistant, Blackwood, Blackwood & Co.	12, Clive Street ...	ditto	
2227	Ghose, Soshi Bhoosan ...	Head Clerk, Standard Oil Company of New York.	8, Dalhousie Square, East ...	ditto	
2228	Ghose, Shyma Churn ...	Assistant Superintendent, Accountant-General's Office, Bengal.	The Treasury ...	ditto	
2229	Ghose, Sita Nath	Cashier and Book-keeper, Geo Beaver & Co.	8-1, Dalhousie Square, East ...	ditto	
2230	Ghose, Siva Nath ...	Merchant ...	85, Beehu Chatterjee's Street	ditto	
[illegible]	Ghose, [illegible] ...	Assistant, Sailessur & Co ...	132, Canning Street ...	ditto	
2232	Ghose, Srikali ...	Partner, Ghosh, Mitter & Co ...	2-4, Radha Bazar Lane ...	ditto	
2233	Ghose, Sris Chunder ...	Assistant Superintendent, Accountant-General's Office, Bengal.	The Treasury ...	ditto	
2234	Ghose, Surendra Nath, B A.	Assistant, Bengal Secretariat, General and Revenue Departments.	Writers' Buildings ...	ditto	

2235	Ghose, Surendra Nath ...	Assistant, British American Tobacco Company, Ld	95, Clive Street ...	ditto
2236	Ghose, Suresh Chunder ...	Clerk, Ullmann, Hirschhorn & Co ...	14, Radha Bazar Lane ...	ditto
2237	Ghose, Sattya Kumar ...	Assistant, Office of Secretary to the Government of Bengal, P W D	Writers' Buildings ...	ditto
2238	Ghose, Tarapado ...	Assistant, Office of Secretary to the Government of India, Finance and Commerce Department.	Treasury Buildings ...	ditto
*2239	Ghose, Taraprasad ...	Jr. 4th class Clerk, Lower Division, Office of Secretary to the Government of India, Military Department.	6, Esplanade, East ...	ditto
2240	Ghose, T K ...	Sanitary Inspector, District No. III, Municipal Office.	Municipal Office ...	ditto
2241	Ghose, Umes Chunder ...	Clerk, Office of Comptroller-General and Comptroller, India Treasuries.	The Treasury ...	ditto
2242	Ghose, Upendra Nath ...	Accounts Clerk, Agent and Chief Engineer's Office, B C R.	159-1, Bow Bazar Street ...	ditto
2243	Ghose, Upendra Nath ...	Assistant, Macneill & Co ...	2, Clive Ghat Street ...	ditto
2244	Ghose, Wooma Charan ...	Assistant, David Sassoon & Co, Ld ...	3, Fairlie Place ...	ditto
2245	Ghose, Woomesh Chunder	Clerk, Office of Pay Examiner, Military Accounts Department, E C.	3, Koila Ghat Street ...	ditto
*2246	Girdhari Lall ...	Clerk. Office of Accountant-General, P W D.	Imperial Secretariat Buildings	ditto
2247	Gorgori, Ram Das ...	Assistant, Bengal Secretariat, Municipal Department.	Writers' Buildings ...	ditto
2248	Gosamy, Purna Chandra, M.A.	Professor, Ripon College ...	60, Mirzapore Street ...	ditto
2249	Guha, N B ...	Cashier, W Leslie & Co ...	2, Chowringhee ...	ditto
2250	Gupte, B A ...	Personal Assistant to the Director of Ethnography for India.	Home Department ...	ditto
*2251	Gupte, Amulya Nath ...	7th Class Clerk, Secretariat, Government of India, P W D.	Imperial Secretariat Buildings	ditto

No.	Names.	Style or Calling.	Residence or place of business.	Religion.	Remarks.
	G.				
2252	Gupto, Bata Krishna ...	Book-keeper, Calcutta Landing and Shipping Company, Ld.	24, Strand ...	Hindu	
2253	Gupto, Bepin Behary ...	Assistant, Government of India, Statistical Department.	7, Koila Ghat Street ...	ditto	
2254	Gupto, Bepin Behary ...	Clerk, Office of Pay Examiner, Military Accounts Department, E C	3, Koila Ghat Street ...	ditto	
2255	Gupto, Brojendro Mohun, B.A.	Head Assistant, Bengal Office, Judicial, Political and Appointment Departments.	Writers' Buildings ...	ditto	
2256	Gupto, Gopal Chunder ...	Clerk, National Bank of India, Ld ...	104, Clive Street ...	ditto	
2257	Gupto, Hari Charan ...	Head Assistant and Cashier, Board of Examiner's Office.	26, Mangoe Lane ...	ditto	
2258	Gupto, Hari Das ...	Accountant, 1st grade, Office of Accountant-General, Military Department.	6, Esplanade Row, East ...	ditto	
2259	Gupto, Jogendra Nath ...	Head Assistant, Bengal Office, Judicial, Political and Appointment Departments.	Writers' Buildings ...	ditto	
2260	Gupto, Khagendra Nath ...	Assistant, Army and Navy Co-Operative Society, Ld.	41, Chowringhee ...	ditto	
2261	Gupto, Narain Chunder ...	1st class Clerk, Office of Accountant-General, Military Department.	6, Esplanade Row, East ...	ditto	
2262	Gupto, Pulin Behari ...	Clerk, Chief Engineer's Office, E I R	E I R House ...	ditto	
2263	Gupto, Sita Nath ...	Assistant, R C Gupta & Sons ...	81, Clive Street ...	ditto	
2264	Gupto, Surendra Nath ...	License Inspector ...	Municipal Office ...	ditto	
2265	Gupto, Syama Churn, B.A. ...	Head Master, Bethune Collegiate School.	181, Cornwallis Street ...	Brahmo	
2266	Gupto, Uma Churn ...	3rd Class Assistant, Office of Accountant-General, Military Department.	6, Esplanade Row, East ...	Hindu	
	H.				
2267	Halder, Girija Bhusan ...	Inspector, Collector's Department ...	Municipal Office ...	ditto	
2268	Halder, Gour Chunder ...	Clerk, Comptroller-General's Office ...	The Treasury ...	ditto	

2269	Halder, Peary Mohan	...	Head Clerk, Assessor's Department ..	Municipal Office	...	ditto
2270	Halder, Priya Nath	...	Assistant, Board of Revenue, L P ...	2, Bankshall Street	...	ditto
2271	Halder, Wooma Churn	...	Head Assistant, Account Department, Office of the Calcutta Port Commissioners.	Strand Road	...	ditto
**2272	Hari Sankar	...	Junior 5th Class Clerk, Lower Division, Office of Secretary to the Government of India, Military Department.	6, Esplanade, East	...	ditto
	I					
2273	Islam, Maulvi Mahomed	...	License Inspector ...	Municipal Office	...	Muhammadan
2274	Imut Ali, Munshi	...	Offg. Deputy Superintendent, Presidency Jail Press.	Presidency Jail Press	...	ditto
	J					
2275	Jafari, Maulvi Mahamud Yusuf.		Head Maulvi, Board of Examiner's Office.	26, Mangoe Lane	...	ditto
2276	Jha, Pandit Basti Ram	...	Accountant, Allahabad Bank, Ld ...	101-1, Clive Street	...	Hindu
	K					
**2277	Kaisth, Hari Sankar	...	Junior 5th class Clerk, Lower Division, Office of Secretary to the Government of India, Military Department.	6, Esplanade, East	...	ditto
**2278	Kanhya Lall (I)	...	7th Class Clerk, Secretariat, Government of India, P W D.	Imperial Secretariat Buildings		ditto
2279	Karadkar, Mahadeo Rudrappa.		Accountant, Office of Examiner of Ordnance Factory Accounts in India.	1, Koila Ghat Street	...	ditto
2280	Karmokar, Prolad Chunder		Assistant Master, Calcutta Institution	198, Bow Bazar Street	...	ditto
2281	Ker, Preo Nath	...	Assistant, Government of India, Statistical Department.	7, Koila Ghat Street	...	ditto
2282	Kerr, Koylash Nath	...	Assistant, Office of Secretary to the Government of Bengal, P W D.	Writers' Buildings	...	ditto
2283	Kessowjee, Jeena	...	Assistant, British-American Tobacco Company, Ld.	95, Clive Street	...	ditto
**2284	Khan, Mahammad Hasan		Assistant, Office of Secretary to the Government of India, Finance and Commerce Department.	Treasury Buildings	...	Muhammadan

No.	Name	Style or Calling	Residence or place of business.	Religion	Remarks.
	H				
2285	Koar, Abinash Chunder ...	Clerk, Home Department ...	Home Department ...	Hindu	
2286	Koar, Kailas Chunder ...	Assistant, Bengal Secretariat, Accounts Department.	Writers' Buildings ...	ditto	
2287	Komar, A P ...	Sanitary Inspector, District No. I, Municipal Office.	79, Cornwallis Street ...	ditto	
2288	Kor, Ashu Tosh ...	Clerk, Surveyor-General's Office, Correspondence Branch.	13, Wood Street ...	ditto	
2289	Kumar, Ashu Tosh ...	Manager, Jail Depôt ...	5, Hastings Street ...	ditto	
2290	Kundu, Abinash Chandra ...	Dealer in Firearms and Medicines ...	10, Chandney Choke Street ...	ditto	
2291	Kundu, J ...	Sanitary Inspector, District No. I, Municipal Office.	79, Cornwallis Street ...	ditto	
2292	Kundu, Peary Bhusan ...	Draftsman, Chief Engineer's Office, E I R	E I R House ...	ditto	
2293	Kur, Gopal Krishna ...	Accountant, Office of Controller of Military Accounts E C, Accounts Branch.	3, Koila Ghat Street ...	ditto	
	L				
2294	Laha, Harry Dass ...	Assistant, Allen Brothers & Co ...	1, New China Bazar Street ...	ditto	
2295	Laha, Kenai Lall ...	Assistant, F W Heilgers & Co ...	136, Canning Street ...	ditto	
2296	Lahoory, Hem Chunder ...	Assistant, Mackinnon, Mackenzie & Co.	16, Strand ...	ditto	
2297	Lahoory, Janendra Bhusan	Assistant, Board of Revenue, L P ...	2, Bankshall Street ...	ditto	
2298	Lahoory, P C ...	Food Inspector, District Health Officer's Department, District No. I.	79, Cornwallis Street ...	ditto	
	[illegible] Nath ...	Assistant, Begg, Dunlop & Co ..	12, Mission Row ...	ditto	
2299	Lahoory, Kedar [illegible]	[illegible] Clerk, Secretariat, Government of India, P W D.	Imperial Secretariat Buildings	ditto	
2300	Lahoory, Srish Chunder ...				
2301	Lohia, Budridas ...	Under-broker, Anderson, Wright & Co.	90, Cross Street ...	ditto	

2302	Madho Prasad	...	Bill Examiner, Bank of Bengal	...	Strand	... ditto
2303	Mahamed Amjad	...	Assistant, Board of Revenue, L P	...	2, Bankshall Street	... Muhammadan
*2304	Mahamed Hossein	...	6th class clerk, Secretariat, Government of India, P W D.		Imperial Secretariat Buildings	ditto
*2305	Maharaj	...	7th class clerk, Secretariat, Government of India, P W D.		Ditto	... Hindu
2306	Mahmud	..	Officiating Head Master, Calcutta Madrassa.		Calcutta Madrassa	... Muhammadan
2307	Maneckjee, Byramjee	...	Manager, Framjee & Sons	...	11, Bentinck Street	... Parsee
2308	Maulik, Kala Chand	...	Junior 5th class clerk, Lower Division, Office of Secretary to the Government of India, Military Department.		6, Esplanade, East	... Hindu
2309	Mehta, D H	...	Assistant, K E Heynemann	...	4, Lyons Range	... Zoroastrian
2310	Mehta, D R	...	Assistant, Commercial Bank of India, Ld.		5-1, Fairlie Place	... Parsee
2311	Misser, Gopee Nath	...	Gopee Nath Misser & Co	...	132, Cotton Street	... Hindu
2312	Misra, Bata Krishna	...	2nd clerk, Agent and Chief Engineer's Office, B C R.		159-1, Bow Bazar Street	.. ditto
2313	Mitter, Akhoi Kumar	...	3rd class Assistant, Office of Controller of Military Accounts, E C, Supply and Transport Branch.		3, Koila Ghat Street	... ditto
2314	Mitter, Akhoi Kumar	...	3rd class Assistant, Office of Controller of Military Accounts, E C, Supply and Transport Branch.		1, 2 & 3, Koila Ghat Street	... ditto
2315	Mitter, Amrita Lal	...	Inspector, Collector's Department, Municipal Office.		Municipal Office	... ditto
2316	Mitter, Ashutosh	...	Professor, Metropolitan Institution	...	Sunker Ghose's Lane, Bar Simla.	ditto
2317	Mitter, Ashutosh	...	Clerk, Office of Pay Examiner, Military Accounts Department, E C.		3, Koila Ghat Street	... ditto
2318	Mitter, Ashutosh	...	Assistant, Board of Revenue, L. P.		2, Bankshall Street	... ditto
2319	Mitter, Bepin Behary	...	Assistant, Bengal Secretariat, Municipal Department.		Writers' Buildings	... ditto
2320	Mitter, Bepin Behary	...	Assistant, Burk Brothers	...	2 & 4, Potter's Lane	... ditto
2321	Mitter, Bepin Behary	...	Landholder	...	Shambazar	... ditto
2322	Mitter, Bhola Nath	...	Assistant, J Thomas & Co	...	8, Mission Row	... ditto

No.	Names.	Style or Calling.	Residence or place of business.		Remarks.
	M				
2323	Mitter, Bhupendra Nath ...	Superintendent, Comptroller-General's Office.	The Treasury	...	Hindu.
2324	Mitter, Brojendra Chandra	Head Assistant, Stamp Department Calcutta Collectorate.	3, Charnock Place	...	ditto
2325	Mitter, C C (Rai Sahib) ...	Clerk, Foreign Office ...	Esplanade, West	...	ditto
2326	Mitter, Charu Chunder ...	License Inspector ...	Municipal Office	...	ditto
2327	Mitter, Chuni Lall ...	Inspector, Suburban Drainage Department, Municipal Office.	4, Corporation Street	...	ditto
2328	Mitter, Doorga Das ...	Inhabitant ...	20, Ghose's Lane, Simla	...	ditto
2329	Mitter, Geereendro Nath ...	Accountant, North British and Mercantile Insurance Office.	100, Clive Street	...	ditto
2330	Mitter, Girish Chunder ...	Assistant, Graham & Co ...	9, Clive Street	...	ditto
2331	Mitter, Hira Lal ...	Partner, J & N Bhuttacharjee & Co	77, Harrison Road	...	ditto
2332	Mitter, Hira Lal ...	Clerk, Office of Comptroller-General and Comptroller, India Treasuries.	The Treasury	...	ditto
2333	Mitter, Horo Nath ...	Clerk, Office of Controller of Military Accounts, Accounts Branch, E C.	3, Koila Ghât Street	...	ditto
2334	Mitter, Hurree Madhub ...	Assistant Accountant, Chief Supply and Transport Office, Presidency District.	5, Strand	...	ditto
2335	Mitter, Hurry Churn ...	Superintendent, Training Academy	Simla Street	...	ditto
2336	Mitter, J C ...	Partner, Saileesur & Co ...	132, Canning Street	...	ditto
2337	Mitter, Jnanendra Nath ...	Assistant, Bengal Secretariat, Financial Department.	Writers' Buildings	...	ditto
2338	Mitter, Kally Charan ...	Clerk, Walter Locke & Co, Ld ...	4, Esplanade	...	ditto
2339	Mitter, Kally Charan ...	Clerk, Ullmann, Hirschhorn & Co. ...	14, Radha Bazar Lane	...	ditto
2340	Mitter, Kally Nath ...	Assistant, G E Hotel Co, Ld ...	1, 2 & 3, Old Court House Street.		ditto
2341	Mitter, Kissory Lal ...	4th class Assistant, Office of Controller of Military Accounts, E C, Supply and Transport Branch.	3, Koila Ghât Street	...	ditto
[illegible]	[illegible]orimohun ...	Assistant, Board of Revenue, L P ...	2, Bankshall Street	...	ditto
2342	Mitter, [illegible] Chunder ...	Assistant, Graham & Co ...	9, Clive Street	...	ditto
2343	Mitter, Koylash C[illegible]ar ...	Inhabitant ...	Rajendranath Sen's Lane, Kassaripara.		ditto
2344	Mitter, Krishna Kum[illegible]				

2345	Mitter, Lolit Chunder ...	Licensee Inspector, Municipal Office ...	Municipal Office ...	ditto
2346	Mitter, Moti Lall ...	Partner, Abbott, Mitter & Co ...	14, Old Court House Lane ...	ditto
2347	Mitter Moty Lall ..	Assistant, O. Steel & Co ...	14, Old Court House Street ..	ditto
2348	Mitter, Narasingha Prosad	Assistant, Office of Secretary to the Government of India, Department of Finance and Commerce.	Treasury Buildings ...	ditto
2349	Mitter, Narendra Krishna	Clerk, Office of Accountant-General, Military Department.	6, Esplanade Row, East ...	ditto
2350	Mitter, Narendra Krishna...	Accountant, Bengal Chamber of Commerce.	2, Clive Street ...	ditto
2351	Mitter, Opendro Kissen ...	Assistant Examiner, 1st grade, Office of Accountant-General, Military Department.	6, Esplanade Row, East ...	ditto
2352	Mitter, Panna Lal ...	Assistant, O. Steel & Co ...	14, Old Court House Street ...	ditto
2353	Mitter, P C ...	Sanitary Inspector, District No. I, Municipal Office.	79, Cornwallis Street ...	ditto
2354	Mitter, Raj Coomar ...	Assistant, Cutler, Palmer & Co ...	1, Hastings Street ...	ditto
2355	Mitter, Raj Rajessur ...	Partner, Ghosh, Mitter & Co ...	2-4, Radha Bazar Lane ...	ditto
2356	Mitter, Ram Chunder ...	Clerk, Home Department ...	Home Department ...	ditto
2357	Mitter, Rasamoy ...	Head Master, Hindu School ...	College Square ...	ditto
2358	Mitter, Sarat Chunder ..	Accountant, Office of Government Examiner of Railway Accounts, P W D.	E I R House ...	ditto
2359	Mitter, Sarat Chunder ...	Assistant, Bengal Office, Judicial, Political and Appointment Departments.	Writers' Buildings ...	ditto
2360	Mitter, Sarat Chunder ...	4th grade clerk, Office of Examiner of Ordnance Factory Accounts in India.	1, Koila Ghât Street ...	ditto
2361	Mitter, Saroda Churn ...	Supervisor, Office of Executive Engineer, 1st Calcutta Division	Writers' Buildings ...	ditto
2362	Mitter, Saroda Prosad ...	Store-keeper, Grand Hotel ...	16, Chowringhee ...	ditto
2363	Mitter, Satindra Nath ...	Inspector, Collector's Department ...	Municipal Office ...	ditto

No.	Names.	Style or Calling.	Residence or place of business.	Religion.	Remarks.
	M				
*2364	Mitter, S C ...	Supervisor, District Engineer's Office, District No. 1.	79, Cornwallis Street ...	Hindu	
*2365	Mitter, Srish Chandra ...	2nd class Senior clerk, Upper Division, Office of Secretary to the Government of India, Military Department.	6, Esplanade, East ...	ditto	
2366	Mitter, Srish Chandra ...	Bustee Assessor ...	Municipal Office ...	ditto	
2367	Mitter, Srish Chandra ...	Superintendent, Comptroller-General's Office.	The Treasury ...	ditto	
2368	Mitter, Uma Charan ...	Head Clerk, Book Section, Account Department.	Municipal Office ...	ditto	
2369	Mitter, U N ...	Food Inspector, District No. II, Municipal Office.	ditto ...	ditto	
*2370	Mitter, Upendra Mohan, B.A.	Assistant, Bengal Secretariat, Judicial, Political and Appointment Departments.	Writers' Buildings ...	ditto	
2371	Mitty, N L ...	Assistant, F W Howse & Co ...	3, Lall Bazar ...	ditto	
2372	Moghal Jan, Munshi ...	Engraver, Engraving Department, Surveyor-General's Office.	13, Wood Street ...	Muhammadan	
2373	Mogha, Ram Chundra Daji	Accountant, Office of Examiner of Ordnance Factory Accounts in India.	1, Koila Ghât Street ...	Hindu	
*2374	Mookerjee, Abhoy Churn ...	Superintendent, Office of Secretary to the Government of India, Finance and Commerce Departments.	Treasury Buildings ...	ditto	
*2375	Mookerjee, Aghorenath ...	Clerk, Home Department ...	Home Department ...	ditto	
2376	Mookerjee, Akhoy Coomar	Assistant, Mackinnon, Mackenzie & Co	16, Strand ...	ditto	
2377	Mookerjee, Amrita Lall ...	3rd clerk, Arsenal Office ...	Fort William ...	ditto	
2378	Mookerjee, Annoda Churn	Assistant, Bengal Secretariat, General and Revenue Departments.	Writers' Buildings ...	ditto	
2379	Mookerjee, A T ...	Sanitary Inspector, District No. II, Municipal Office.	Municipal Office ...	ditto	

2380	Mookerjee, Aucotosh ...	Assistant, David Sassoon & Co, Ld ...	3, Fairlie Place ...	ditto
2381	Mookerjee, Bamapodo ...	Assistant, Williamson, Magor & Co	4, Mangoe Lane ...	ditto
2382	Mookerjee, Benode Behary	Accountant, Office of Controller of Military Accounts, Accounts Branch, E C.	3, Koila Ghât Street ...	ditto
2383	Mookerjee, Bepin Behary ..	Assistant, Board of Revenue, L P ...	2, Bankshall Street ...	ditto
2384	Mookerjee, Bepin Behary ...	Assistant, Halford, Smith & Co ...	1, Mission Row ..	ditto
2385	Mookerjee, Bepin Behary ..	Storekeeper of Stationery, Office of the Superintendent of Stamps and Stationery.	4 & 5, Church Lane ...	ditto
2386	Mookerjee, Bhoot Nath ...	Firm of T C Mookerjee & Co ...	33-1, Beadon Street ...	ditto
2387	Mookerjee, Bhupati ...	Clerk, Walter Locke & Co, Ld ...	4, Esplanade ...	ditto
2388	Mookerjee, Bidhu Bhushan	First Assistant to Bengali Translator to the Government of Bengal.	Writers' Buildings ...	ditto
2389	Mookerjee, Boidya Nath ...	Proprietor, B N Mookerjee & Co ...	7, Swallow Lane ...	ditto
2390	Mookerjee, Brindabun Chunder.	Assistant, Office of Examiner of Ordnance and Army Clothing Branches.	Military Accounts Department Buildings, Koila Ghât.	ditto
2391	Mookerjee, Dakhina Ranjan	Assistant Engineer, Circular and Eastern Canals Division.	Writers' Buildings ...	ditto
2392	Mookerjee, Debendro Nath	7th class Clerk, Secretariat, Government of India, P W D.	Imperial Secretariat Buildings	ditto
2393	Mookerjee, Debendra Nath	Assistant, Office of Secretary to the Government of India, Finance and Commerce Department.	Treasury Buildings ..	ditto
2394	Mookerjee, Denonath ...	Assistant, Office of Commissioner of Excise & Salt, Bengal.	2, Bankshall Street ...	ditto
2395	Mookerjee, Din Doyal ...	Assistant, Harman & Co ...	12, Government Place ...	ditto
2396	Mookerjee, Doyal Kissen ...	Assistant, F Harley & Co ...	10, Lall Bazar ...	ditto
2397	Mookerjee, Gooroo Prosanna	Assistant, Carritt, Moran & Co ...	9, Mission Row ...	ditto
2398	Mookerjee, Gopal Chunder	Assistant Superintendent, Accountant-General's Office, Bengal.	The Treasury ...	ditto
2399	Mookerjee, Haran Chunder	Clerk, Royal Insurance Co ...	26-27, Dalhousie Square ...	ditto
2400	Mookerjee, Hari Dass ...	Clerk, Chartered Bank of India, Australia & China.	5, Council House Street ..	ditto

No.	Names.	Style or Calling.	Residence or place of business.	Religion.	Remarks.
	M				
2401	Mookerjee, Haridhan ...	Estimator, Office of Executive Engineer, 1st Calcutta Division.	Writers' Buildings ...	Hindu	
2402	Mookerjee, Hari Nath ...	Assistant, H D Cartwright & Co ...	13, Clive Street ...	ditto	
2403	Mookerjee, Hari Prasanna, B.A.	Assistant, Bengal Secretariat, General and Revenue Departments.	Writers' Buildings ...	ditto	
2404	Mookerjee, Hari Sadhan ...	Assistant Superintendent, Accountant-General's Office, Bengal.	The Treasury ...	ditto	
2405	Mookerjee, Hem Chunder ...	Assistant, James Murray & Co ...	12, Government Place ...	ditto	
*2406	Mookerjee, Hem Chunder, B.A.	Assistant, Bengal Office, Judicial, Political and Appointment Departments.	Writers' Buildings ...	ditto	
*2407	Mookerjee, Hira Lal ...	7th class clerk, Secretariat, Government of India, P W D	Imperial Secretariat Buildings	ditto	
2408	Mookerjee, Hira Lal ...	Assistant to Director of Public Instruction, Bengal.	Writers' Buildings ...	ditto	
2409	Mookerjee, Hurry Dass ...	Assistant, Shaw, Wallace & Co ...	20, Strand Road ...	ditto	
2410	Mookerjee, Hurry Hur ...	3rd grade Accountant, Office of Controller of Military Accounts, E C.	3, Koila Ghât Street ...	ditto	
2411	Mookerjee, H M ...	General Record Assistant, Office of Secretary to the Government of India, Revenue and Agricultural Department.	Imperial Secretariat Buildings	ditto	
*2412	Mookerjee, Iswara Chandra	Clerk, Office of Accountant-General, P W D.	Ditto ...	ditto	
2413	Mookerjee, Jamini Kanto...	Assistant, Board of Revenue, L P ...	2, Bankshall Street ...	ditto	
2414	Mookerjee, Janoki Nath ...	Draftsman, Chief Engineer's Office, E I R.	E I R House ...	ditto	
2415	Mookerjee, Jogendro Nath	Clerk, Ullmann, Hirschhorn & Co ...	14, Radha Bazar Lane ...	ditto	
2416	Mookerjee, Jogendra Nath	Head Clerk, Wards Department, Presidency Commissioner's Office.	3, Charnock Place ...	ditto	
2417	Mookerjee, Jogesh Chunder	Sub-Assistant Auditor, E I R ...	E I R House ...	ditto	

2418	Mookerjee, Jotindra Nath ...	Assistant, Bengal Secretariat, Financial Department.	Writers' Buildings		ditto
2419	Mookerjee, K ...	Sanitary Inspector, District No. III, Municipal Office.	7, Sudder Street	...	Theist
2420	Mookerjee, Kally Gopal ...	3rd grade Accountant, Office of Examiner, Public Works Accounts, Bengal.	8, Lyons Range	...	Hindu
2421	Mookerjee, Kedarnath ...	Accountant, 1st grade, Office of Examiner of Ordnance and Army Clothing Branches	Military Accounts Department Buildings, Koila Ghât Street.		ditto
2422	Mookerjee, Kedar Nath ...	4th class Assistant, Office of Controller of Military Accounts, E C, Supply and Transport Branch.	3, Koila Ghât Street	...	ditto
2423	Mookerjee, Kedar Nath ..	Clerk, Office of Comptroller-General and Comptroller, India Treasuries.	The Treasury	...	ditto
2424	Mookerjee, Keerty Chunder	Clerk, Chartered Bank of India, Australia & China.	5, Council House Street	...	ditto
2425	Mookerjee, Kisto Nath ...	Assistant, Macneill & Co ...	2, Clive Ghât Street	...	ditto
2426	Mookerjee, K K ...	Assistant, David Sassoon & Co, Ld ...	3, Fairlie Place	...	ditto
2427	Mookerjee, Koylash Chunder	Assistant, Macneill & Co ...	2, Clive Ghât Street	...	ditto
2428	Mookerjee, Kristodhone ...	Assistant, Office of Inspector-General of Police, L P.	Writers' Buildings	...	ditto
2429	Mookerjee, Kumud Bundhoo	Assistant, Bengal Secretariat, P W D	Ditto	...	ditto
2430	Mookerjee, Kumud Chunder	6th class clerk, Office of Secretary to the Government of India, Public Works Department.	Imperial Secretariat Buildings		ditto
2431	Mookerjee, Lal Mohun ...	Cashier, Royal Insurance Co ...	26-27, Dalhousie Square	...	ditto
2432	Mookerjee, Mahendra Nath	Junior 4th class clerk, Lower Division, Office of Secretary to the Government of India, Military Department.	6, Esplanade, East	...	ditto
2433	Mookerjee, Mohendra Nath	Clerk, Comptroller-General's Office ...	The Treasury	...	ditto
2434	Mookerjee, Makhun Lall ...	Deputy Stamp Store-keeper, Office of Superintendent of Stamps and Stationery.	4 and 5, Church Lane	...	ditto
2435	Mookerjee, Makhun Lall ...	Store keeper, Grindlay & Co ...	11, Hastings Street	...	ditto

No.	Names.	Style or Calling.	Residence or place of business.	Religion.	Remarks.
	M				
2436	Mookerjee, Mohun Lall ...	Accountant, Bengal Secretariat, Financial, Municipal and Accounts Departments.	Writers' Buildings ...	Hindu	
2437	Mookerjee, Monmotho Nath	Partner, A J Bolton & Co ...	32, Jackson Ghât Street ...	ditto	
2438	Mookerjee, Monomohun ...	Head Clerk, Arsenal Office ...	Fort William ...	ditto	
2439	Mookerjee, Narayan Chunder, B.A.	Assistant Head Master, Hare School	College Square ...	ditto	
2440	Mookerjee, Neharan Chunder.	4th grade Clerk, Office of Examiner of Ordnance Factory Accounts in India.	1, Koila Ghât Street ...	ditto	
2441	Mookerjee, Nikhil Ranjan...	Assessor of Income-tax ...	3, Charnock Place ...	ditto	
2442	Mookerjee, Norendra Nath	Clerk, Surveyor-General's Office, Correspondence Branch.	13, Wood Street ...	ditto	
2443	Mookerjee, Okhil Nath ...	Assistant Statistical Supervisor, General Traffic Manager's Office, E I R.	E I R House ...	ditto	
2444	Mookerjee, Onookul Chunder	Cashier, Office of Superintendent, Government Printing, India.	8, Hastings Street ...	ditto	
2445	Mookerjee, Panchcowrie ...	Assistant Accountant, B C R ...	159, Bow Bazar Street ...	ditto	
2446	Mookerjee, P K ...	Treasurer, Municipal Office ...	Municipal Office ...	ditto	
2447	Mookerjee, P N ..	Sanitary Inspector, District No II, Municipal Office.	Municipal Office ...	ditto	
2448	Mookerjee, Prankissen ...	Clerk, Office of Controller of Military Accounts, Accounts Branch, E C.	3, Koila Ghât Street ...	ditto	
2449	Mookerjee, Punchanon ...	Assistant, Mackinnon, Mackenzie & Co.	16, Strand ...	ditto	
2450	Mookerjee, Rajendra Chunder	Clerk, Comptroller-General's Office ...	The Treasury ...	ditto	
2451	Mookerjee, Rajendro Nath	Jr. 3rd class clerk, Lower Division, Office of Secretary to the Government of India, Military Department.	6, Esplanade, East ...	ditto	

2452	Mookerjee, Rajkumar ...	Assistant, Barry & Co. ...	5, Lyons Range ...	ditto
2453	Mookerjee, Rakhal Chunder	License Inspector, Municipal Office ...	Municipal Office ...	ditto
**2454	Mookerjee, Ram Chunder...	Accountant, Accountant-General's Office, P W D.	Imperial Secretariat Buildings	ditto
2455	Mookerjee, Ram Chunder...	Partner, A J Bolton & Co ...	32, Jackson Ghât Street ...	ditto
2456	Mookerjee, Rameshur ...	Assistant, Board of Revenue, L P ...	2, Bankshall Street ...	ditto
**2457	Mookerjee, R N ...	Assistant, Office of Secretary to the Government of India, Revenue and Agricultural Department, General Branch.	Imperial Secretariat Buildings	ditto
2458	Mookerjee, Sagor Lal ..	Clerk, Office of Comptroller-General and Comptroller, India Treasuries.	The Treasury ...	ditto
2459	Mookerjee, Sarat Chunder	General Assistant to Secretary, Municipal Office.	Municipal Office ...	ditto
2460	Mookerjee, Sasadhar ...	Assistant, R C Gupta & sons ...	81, Clive Street ...	ditto
2461	Mookerjee, Sasanka Mohan	Assistant, Office of Commissioner of Excise and Salt, Bengal.	2, Bankshall Street ...	ditto
2462	Mookerjee, Sati Ranjan ...	License Inspector ...	Municipal Office ...	ditto
2463	Mookerjee, Shoshebhooson	Inhabitant ...	Jorasanko ...	ditto
2464	Mookerjee, Sree Nath ...	Assistant, Mackinnon, Mackenzie & Co.	16, Strand ...	ditto
2465	Mookerjee, Sre Narain ...	Diary-keeper, Government Printing Office, India.	8, Hastings Street ...	ditto
2466	Mookerjee, Srish Chunder ...	Assistant, Moll, Schutte & Co ...	1, Lall Bazar Street ...	ditto
2467	Mookerjee, Tarapodo ...	Assistant, Bengal Secretariat, General and Revenue Departments.	Writers' Buildings ...	ditto
2468	Mookerjee, Thacoor Das ...	Assistant, Mackinnon, Mackenzie & Co.	16, Strand ...	ditto
2469	Mookerjee, Umbica Churn...	Assistant Litho. Printer, Surveyor-General's Office.	14, Wood Street ...	ditto
2470	Mookerjee, Upendra Nath...	Assistant, Office of Secretary to the Government of India, Finance and Commerce Department.	Treasury Buildings ...	ditto

No.	Names.	Style or Calling.	Residence or place of business.	Religion	Remarks.
	M				
2471	Moytro, Banamali ...	Clerk, Medical College ...	College Street ...	Hindu	
2472	Moytro, Hari Das ...	Inspector, Collector's Department ...	Municipal Office ...	ditto	
2473	Moytro, Jadu Nath ...	Accountant, Andrew Yule & Co ...	7, Clive Row ...	ditto	
2474	Mozoomdar, Anooja Churn	Clerk, Office of Examiner, Public Works Accounts, Bengal.	8, Lyons Range ...	ditto	
2475	Mozoomdar, Ashootosh ...	Assistant, Board of Revenue, L P ...	2, Bankshall Street ...	ditto	
2476	Mozoomdar, Behary Lall ...	Clerk, Grindlay & Co ...	11, Hastings Street ...	ditto	
2477	Mozoomdar, Broja Syam ...	Assistant to Director of Public Instruction, Bengal.	Writers' Buildings ...	ditto	
*2478	Mozumdar, Hem Chunder...	4th class clerk, Secretariat, Government of India, P W D.	Imperial Secretariat Buildings	ditto	
*2479	Mozoomdar, Hemendra Nath	Clerk, Accountant-General's Office, P W D.	Ditto ...	ditto	
2480	Mozoomdar, Jnanendra Lal	3rd Assistant to Bengali Translator to the Government of Bengal.	Writers' Buildings ...	ditto	
2481	Mozoomdar, Khogendra Nath	Clerk, Audit Office, E I R ...	E I R House ...	ditto	
2482	Mozoomdar, Norendra Krishna	Clerk, Audit Office, E I R ...	Ditto ...	ditto	
2483	Mozoomdar, Radhica Prasanna.	Clerk, Office of Government Examiner of Railway Accounts, P W D.	Ditto ...	ditto	
2484	Mozoomdar, Rakhal Das ...	Assistant, Office of Secretary to the Government of India, Finance and Commerce Departments.	Treasury Buildings ...	ditto	
2485	Mozoomdar, Sarat Chandra	Professor, General Assembly's Institution.	Cornwallis Square ...	ditto	
2486	Mozoomdar, Sashi Bhusan...	2nd clerk, Department of Land Records and Agriculture, Bengal.	Writers' Buildings ...	ditto	
2487	Mozoomdar, Shama Churn	Jr. 5th class clerk, Lower Division, Office of Secretary to the Government of India, Military Department.	6, Esplanade, East ...	ditto	

2488	Mozoomdar, T N ...	Food Inspector, District No II, Municipal Office.	Municipal Office	...	ditto
2489	Mullick, Aghore Nath ...	Assistant, Bengal Office, Judicial, Political and Appointment Departments.	Writers' Buildings	...	ditto
2490	Mullick, Akshya Kumar ...	Assistant, Board of Revenue, L P ...	2, Bankshall Street	...	ditto
2491	Mullick, Aptap Chunder ...	Inhabitant ...	Beadon Street, Simla	...	ditto
2492	Mullick, Batto Kristo ...	Clerk, Gillanders, Arbuthnot & Co ...	8, Clive Street	...	ditto
2493	Mullick, Gopi Nath ...	Head Clerk, Delhi and London Bank, Ld.	4, Council House Street	...	ditto
2494	Mullick, Gora Chand ...	Assistant, Struthers & Co, Ld ...	28, Strand Road	...	ditto
2495	Mullick, Jadu Nath ...	4th class Assistant, Office of Controller of Military Accounts, E C, Supply and Transport Branch.	3, Koila Ghât Street	....	ditto
2496	Mullick, Kapil Chunder ...	Head Draftsman, Chief Engineer's Office, E I R.	E I R House	...	ditto
2497	Mullick, Saroda Churn ...	Clerk, National Bank of India, Ld ...	104, Clive Street	...	ditto
2498	Mullick Chaudhiri, Banka Behary.	Professor, C M S College ...	18, Simla Street	...	ditto
2499	Mundle, Brindaban ...	Estimator, Military Works, Office of Commanding Royal Engineer, Presidency District.	Fort William	...	ditto
2500	Mundle, Upendro Lall ..	6th class clerk, Secretariat, Government of India, P W D.	Imperial Secretariat Buildings		Christian
2501	Murigiah, Chetty, S ...	Accountant, Office of Government Examiner of Railway Accounts, E I R.	E I R House	...	ditto

N

2502	Nadirshaw, D ...	Stenographer, A P Stockwell & Co ...	2, Pollock Street	...	Zoroastrian
2503	Nag, Chandra Kanta ...	Assistant, Office of Commissioner of Excise and Salt, Bengal.	2, Bankshall Street	...	Hindu
2504	Nag, Hem Chander ...	Assistant, Office of Inspector-General of Police, L P.	Writers' Buildings	...	ditto

No.	Name.	Style or Calling.	Residence or place of business.	Religion.	Remarks.
	N				
2505	Naik, Mehir Lall ...	Assistant, Massey & Co ...	5, Clive Row ...	Hindu	
2506	Nand Sing ...	Draftsman, Chief Engineer's Office, E I R.	E I R House ...	ditto	
2507	Nandan, Ranjan Mohan ..	Inspector, Collector's Department ...	Municipal Office ...	ditto	
2508	Nath, Rajat Chandra ...	Assistant, Board of Revenue, L P ...	2, Bankshall Street ...	Christian	
2509	Nasem-uddin, Maulvi ...	Clerk, Home Department ...	Home Department ...	Muhammadan	
2510	Nundy, Hurry Dass ...	Assistant, Finlay, Muir & Co ...	1, Clive Street ...	Hindu	
2511	Nundy, Jogendro Nath ...	Assistant, Macneill & Co ...	2, Clive Ghât Street ...	ditto	
2512	Nundy, Rakhal Das ...	Assistant, Military Accounts Department, Ordnance and Clothing Branches.	Military Accounts Department Buildings, Koila Ghât Street.	ditto	
2513	Nundy, Sidessur ...	Assistant, Finlay, Muir & Co. ...	1, Clive Street ...	ditto	
2514	Nundy, Srish Chandra ...	Assistant, Board of Revenue, L P ...	2, Bankshall Street ...	ditto	
2515	Nundy, Tincoree ...	Firm of T C Nundy & Co ...	70, Old China Bazar Street ...	ditto	
	O				
2516	Oonvala, Manchershaw Framjee	Head Assistant, Bengal Secretariat, Financial Department.	Writers' Buildings ...	Parsee	
2517	Osman Ally, M ...	Hackney Carriage Inspector, Calcutta Corporation.	Municipal Office ...	Muhammadan	
	P				
2518	Palit, Anath Nath ...	Professor, Metropolitan Institution ...	Sunkur Ghose's Lane, Bar Simla.	Hindu	
2519	Pandit, Akshoya Kumar ...	Assistant, Office of Secretary to the Government of India, Finance and Commerce Departments.	Treasury Buildings ...	ditto	
2520	Patuck, Akhoy C ...	Assistant, David Sassoon & Co, Ld...	3, Fairlie Place ...	ditto	
2521	Patuck, Nemy Churn ...	Assistant, Finlay, Muir & Co ...	1, Clive Street ...	ditto	
2522	Paul, Atul Bihary ...	Assistant, Board of Revenue, L P ..	2, Bankshall Street ...	ditto	
2523	Paul, Brojo Nath ...	Pipe-laying Overseer, Corporation of Calcutta.	11-2, Peary Dass' Lane ...	ditto	

2524	Paul, Chandra Sekhur ...	Assistant, Mackintosh Burn & Co ...	8, Esplanade, East ...	ditto
2525	Paul, Dwarka Nath ...	Clerk, National Bank of India, Ld	104, Clive Street ...	ditto
2526	Paul, Gugan Chunder ...	Assistant, Stationery Department, Office of Superintendent of Stamps and Stationery.	4 & 5, Church Lane ...	ditto
2527	Paul, Haran Chunder ...	3rd class Assistant, Office of Controller of Military Accounts, E C, Supply and Transport Branch.	3, Koila Ghât Street ...	ditto
2528	Paul, Hari Churn ...	Inhabitant ...	Nundo Coomar Chowdhuri's Lane, Bar Simla.	ditto
2529	Paul, Hari Das ...	Assistant, James Murray & Co ...	12, Government Place ...	ditto
2530	Paul, Obhoy Churn ...	Assistant, Turner, Morrison & Co ...	6, Lyons Range ...	ditto
2531	Paul, Purna Chunder ...	Inspector of Lightning Conductors, Office of Executive Engineer, 1st Calcutta Division.	Writers' Buildings ...	ditto
2532	Paul, Radhamadhub ...	Accountant, Andrew Yule & Co ...	7, Clive Row ...	ditto
2533	Paul, Shoya Chand ...	Assistant, Turner, Morrison & Co ...	6, Lyons Range ...	ditto
2534	Paul, Shyma Churn ...	1st grade Accountant, Office of Controller of Military Accounts, E C.	3, Koila Ghât Street ...	ditto
2535	Paul, Sobharam ...	Firm of Paul, Paul & Co ...	18, British Indian Street ...	ditto
2536	Piroshaw, Dorabji Gorwalla	Manager, Temple Bar Hotel ...	177, Dhurrumtollah Street ...	Parsee
2537	Pramanik, Joytish Chandra	Education Head Clerk, Presidency Commissioner's Office.	3, Charnock Place ...	Hindu
2538	Pyne, Brojo Nath ...	Assistant, Mackinnon, Mackenzie & Co	16, Strand ...	ditto
*2539	Pyne, J N ...	6th class clerk, Secretariat, Government of India, Public Works Department.	Imperial Secretariat Buildings	Christian

R

2540	Rae, H B ...	Education Department, Bengal, Presidency College.	College Square ...	ditto
*2541	Ragho Ram ...	5th class clerk, Secretariat, Government of India, Public Works Department.	Imperial Secretariat Buildings	Hindu
2542	Rana, B C ...	Resident Engineer, Calcutta Corporation.	4, Corporation Street ...	ditto

No	Names.	Style or Calling.	Residence or place of business.	Religion.	Remarks.
	R				
2543	Roy, Ashutosh ...	Clerk, Office of Government Examiner of Railway Accounts, P W D.	E I R House ...	Hindu	
2544	Roy, Bhobokally ...	Cashier, B C R ...	159, Bow Bazar Street ...	ditto	
2545	Roy, Benomaly ...	Clerk, Robinson, Morrison & Co ...	5, Commercial Buildings ...	ditto	
2546	Roy, Choonee Lal ...	2nd grade Accountant, Office of Controller of Military Accounts, E C.	3, Koila Ghât Street ...	ditto	
2547	Roy, Devendra Nath, M.A.	Professor, Ripon College ...	60, Mirzapore Street ...	ditto	
2548	Roy, Gosto Behary ...	Assistant, Kettlewell, Bullen & Co. ...	21, Strand Road ...	ditto	
*2549	Roy, Gouri Kanto ...	Clerk, Home Department ...	Home Department ...	Brahmo	
2550	Roy, Haradhan ...	Professor, Albert College ...	15, College Square ...	Hindu	
*2551	Roy, Hem Chunder ...	Clerk, Office of Accountant-General, P W D.	Imperial Secretariat Buildings	Christian	
2552	Roy, H K ...	Sanitary Inspector, District No. 1, Municipal Office.	79, Cornwallis Street ...	Hindu	
2553	Roy, H M ...	Clerk, Agent's Office, E I R ...	E I R House ...	Christian	
2554	Roy, Hurry Narain ...	Assistant, Lyall, Marshall & Co ...	25, Mangoe Lane ...	Hindu	
2555	Roy, Jitendra Nath ...	License Inspector ...	Municipal Office ...	ditto	
*2556	Roy, Jogendranath, B.A. ...	Assistant, Bengal Office, General and Revenue Departments.	Writers' Buildings ...	ditto	
2557	Roy, Jogessur ...	Chief Clerk, Assistant Traffic Superintendent's Office, B C R.	159-1, Bow Bazar Street ...	ditto	
2558	Roy, Kali Prosonno ...	Head Assistant, Office of Inspector-General of Police, L P.	Writers' Buildings ...	ditto	
2559	Roy, Khirode Nath ...	Assistant, Williamson, Magor & Co...	4, Mangoe Lane ...	ditto	
2560	Roy, Kiran Chunder ...	Assistant, Office of Inspector-General of Civil Hospitals and Sanitary Commissioner for Bengal.	Writers' Buildings ...	ditto	
2561	Roy, Lal Behary ...	Assistant, Great Eastern Hotel Co, Ld.	1, 2 & 3, Old Court House Street.	ditto	
2562	Roy, Muktidaranjan ...	Professor, Metropolitan Institution...	Sunker Ghose's Lane, Bar Simla.	ditto	
2563	Roy, Mutty Lall ...	Inhabitant ...	Colootollah ...	ditto	

2564	Roy, Nato Behari	... Cashier, Standard Oil Co of New York.	8, Dalhousie Square, East	...	ditto
2565	Roy, Nogendra Nath	... Clerk, F W Heilgers & Co ...	136, Canning Street	...	ditto
2566	Roy, Norendra Nath	... Assistant, Shaw, Wallace & Co ...	20, Strand Road	...	ditto
2567	Roy, P K	... Health Officer, District No. II, Municipal Office.	Municipal Office	...	Brahmo
2568	Roy, Polin Chunder	... Broker ...	Commercial Buildings	...	Hindu
*2569	Roy, P N	... Clerk, Foreign Office ...	Esplanade, West	...	ditto
2570	Roy, Priya Nath	... Deputy Inspector of Schools, Calcutta	12, Dalhousie Square	...	ditto
2571	Radha Kanta	... Head Assistant, Pre Audit Section ...	Municipal Office	...	ditto
2572	Roy, Radha Nath	... Sub-Registrar of Calcutta ...	Writers' Buildings	...	ditto
2573	Roy, Radhika Nath	... Clerk, Office of Controller of Military Accounts, Accounts Branch, E C.	3, Koila Ghât Street	...	ditto
2574	Roy, Rajkumar	... Establishment Clerk, General Traffic Manager's Office, E I R.	E I R House	...	ditto
2575	Roy, R P	... Resident Engineer, Municipal Office	4, Corporation Street	...	ditto
2576	Roy, Sarat Chunder	... Assistant, Finlay, Muir & Co ...	1, Clive Street	...	ditto
2577	Roy, Saroda Prosad	... Assistant, Board of Revenue, L P ...	2, Bankshall Street	...	ditto
2578	Roy, Saroda Prosad	... Assistant, Williamson, Magor & Co...	4, Mangoe Lane	...	ditto
2579	Roy, Satis Chunder	... Dy. License Officer, Municipal Office	Municipal Office	...	ditto
2580	Roy, Satyendra Nath	.... Assistant, Board of Revenue, L P ...	2, Bankshall Street	...	ditto
*2581	Roy, Shama Churn	... Junior 2nd class clerk, Lower Division, Office of Secretary to the Government of India, Military Department.	6, Esplanade, East	...	ditto
2582	Roy, Shoshi Sikhar	... Assistant, Bengal Secretariat, Financial Department.	Writers' Buildings	...	ditto
2583	Roy, Sita Nath	... Assistant, Shaw, Wallace & Co. ...	20, Strand Road	...	ditto
*2584	Roy, S. K.	... Assistant, Office of Secretary to the Government of India, Revenue and Agricultural Department, Revenue Branch.	Imperial Secretariat Buildings		ditto
*2585	Roy, S N	... Clerk, Foreign Office ...	Esplanade, West	...	ditto

No.	Names.	Style or Calling.	Residence or place of business.	Religion.	Remarks.
	R				
2586	Roy, Surendra Nath ...	Assistant, Board of Revenue, L P ...	2, Bankshall Street ...	Hindu	
2587	Roy, Tarak Nath ...	Reader, Bengal Secretariat Press ...	Writers' Buildings ...	ditto	
2588	Roy Chowdhury, Bepindra Kumara.	Superintendent, Office of Comptroller-General and Comptroller, India Treasuries.	The Treasury ...	ditto	
2589	Roy Chowdhury, Jogendra Chandra.	Head Clerk, Office of Inspector-General of Prisons, Bengal.	Writers' Buildings ...	ditto	
2590	Roy Chowdhury, Nalini Nath.	Assistant, Statistical Department, Government of India.	7, Koila Ghât Street ...	ditto	
2591	Roy Chowdhury, Priya Nath	Assistant, F. Harley & Co ...	10, Lall Bazar Street ...	ditto	
2592	Rudra, Atal Behary ...	Clerk, Grindlay & Co ...	11, Hastings Street ...	ditto	
2593	Rudra, Manmatha Nath ...	Second Assistant to Bengali Translator to the Government of Bengal.	Writers' Buildings ...	ditto	
2594	Rustomjee, C M ...	Assistant, F W Heilgers & Co ...	136, Canning Street ...	Parsee	
	S				
2595	Saha, Bidhu Bhusan ...	Assistant, Finance and Commerce Departments	Treasury Buildings ...	Hindu	
*2596	Saha, S B ...	Assistant, Office of Secretary to the Government of India, Revenue and Agricultural Department, Revenue Branch.	Imperial Secretariat Buildings	ditto	
2597	Said Uddin Ahmad ...	Assistant, Office of Private Secretary to the Viceroy.	6, Council House Street ...	Muhammadan..	
2598	Sanyal, Jogendro Nath ...	Assistant Superintendent, Accountant-General's Office, Bengal.	The Treasury ...	Hindu	
2599	Sanyal, M P ...	Sanitary Inspector, District No. II, Municipal Office.	Municipal Office ...	ditto	
2600	Sanyal, Suresh Chunder ...	Supervisor, District Engineer's Office District No. 2.	ditto ...	ditto	
2601	Sanyal, Shama Churn ...	Assistant, Mackinnon, Mackenzie & Co.	16, Strand ...	ditto	
*2602	Sarvan Lall ...	6th class clerk, Secretariat, Government of India, Public Works Department.	Imperial Secretariat Buildings	ditto	
2603	Seal, Basanta Kumar ...	Clerk, Comptroller-General's Office ..	The Treasury ...	ditto	
2604	Seal, Behary Lall ...	Clerk, Harnack & Co ...	10 & 10-1, Old Court-House Street	ditto	

2605	Seal, Benode Behari	...	Assistant Superintendent, Accountant-General's Office, Bengal.	The Treasury	ditto
2606	Seal, Debendra Nath	...	Assistant, David Sassoon & Co, Ld	3, Fairlie Place ...	ditto
2607	Seal, Doorga Das	...	Partner, Ram Chand Seal & Co ...	41, Strand, North ...	ditto
2608	Seal, Gobordhone	...	Cashier, Chartered Bank of India, Australia and China.	5, Council House Street ...	ditto
2609	Seal, H D	...	Assistant, Framjee & Sons ...	11, Bentinck Street ...	ditto
2610	Seal, Nittanundo	...	Assistant, J. Thomas & Co ...	8, Mission Row ...	ditto
2611	Seal, Norendro Nath	..	Assistant, Board of Revenue, L P ...	2, Bankshall Street ...	ditto
2612	Seal, Nundo Lall	...	Assistant Cashier, National Bank of India, Ld.	104, Clive Street ...	ditto
2613	Seal, Nundo Lall	.	Assistant, David Sassoon & Co, Ld ...	3, Fairlie Place ...	ditto
2614	Seal, Sasi Bhushan	...	Assistant, Pigott, Chapman & Co ...	1, Mission Row ...	ditto
2615	Seal, Sham Lall	...	Head Clerk and Sarishtadar, Presidency Commissioner's Office.	3, Charnock Place	ditto
2616	Seal, Sarat Chunder	...	Head Packer, Office of Superintendent of Stamps and Stationery.	4-5, Church Lane ...	ditto
2617	Seal, Upendra Nath	...	Head Clerk, Mitchell & Co ...	17, Chowringhee ...	ditto
2618	Sen, Annada Churn	...	Assistant, Board of Revenue, L P ...	2, Bankshall Street	ditto
2619	Sen, Benode Bihari	...	Assistant to Director of Public Instruction, Bengal.	Writers' Buildings ...	ditto
2620	Sen, Bepin Behary	...	Assistant, Bissonath Law & Co ...	2, Larkins' Lane ...	ditto
2621	Sen, Bhobanee Coomar	...	Clerk, National Bank of India, Ld .	104, Clive Street ...	ditto
2622	Sen, Chandi Churn, B.A.		Assistant, Bengal Secretariat, General and Revenue Departments.	Writers' Buildings ...	ditto
2623	Sen, Chandra Bhusan	...	Superintendent, Comptroller-General's Office.	The Treasury ...	ditto
2624	Sen, C L	..	Food Inspector, District No. III, Municipal Office.	Municipal Office ...	ditto
2625	Sen, Dinesh Chunder	...	Assistant, Birkmyre Brothers ...	6, Clive Row ...	ditto
2626	Sen, Girish Chunder	...	Assistant Mackinnon, Mackenzie & Co.	16, Strand ...	ditto
2627	Sen, Goorocpada	...	Clerk, Chartered Bank of India, Australia and China.	5, Council House Street ...	ditto
2628	Sen, Hem Nath	...	Assessor of Income-tax ...	3, Charnock Place ...	ditto
2629	Sen, Hem Nath	...	Assistant, Great Eastern Hotel Co, Ld	1, 2 and 3, Old Court House Street.	ditto

A	Names	Style or Calling.	Residence or place of business.	Religion.	Remarks.
	S				
2630	Sen, Hira Lall ...	Clerk, Comptroller-General's Office...	The Treasury ...	Hindu.	
2631	Sen, Jamini Kanta ...	Accountant, Office of Examiner of Ordnance Factory Accounts in India.	1, Koila Ghât Street ...	ditto	
2632	Sen, Jeebon Krisna ...	Clerk, G. F Kellner & Co ...	32, Chowringhee ...	ditto	
2633	Sen, Jnanendra Mohun ...	Assistant, Board of Revenue, L P	2, Bankshall Street ...	ditto	
2634	Sen, Jogendra Nath ...	Clerk, Audit Office, E I R ...	E I R House ...	ditto	
2635	Sen, Kanny Lall ...	Head Clerk, Photographic and Lithographic Department, Surveyor-General's Office.	14, Wood Street ...	ditto	
2636	Sen, Kanti Chunder ...	Clerk, Correspondence Branch, Surveyor-General's Office.	13, Wood Street ...	ditto	
2637	Sen, Mahit Chandra ...	Professor, City College ...	13, Mirzapore Street ...	ditto	
2638	Sen, Modhu Sudon ...	Assessor, Income-tax ...	3, Charnock Place ...	ditto	
2639	Sen, Norendra Nath ...	Assistant, Mackinnon, Mackenzie & Co	16, Strand ...	ditto	
2640	Sen, Opoorba Kissen ...	Cashier, Bengal Chamber of Commerce.	2, Clive Street ...	ditto	
2641	Sen, Paresh Nath ...	Assistant, Barlow & Co ...	37, Strand Road ...	ditto	
2642	Sen, Potit Pabun ...	Cashier, *Statesman* Office ...	3, Chowringhee ...	ditto	
2643	Sen, Pramatha Nath ...	Clerk, Home Department ...	Home Department ...	ditto	
2644	Sen, Preonath ...	5th class Senior clerk, Upper Division, Office of Secretary to the Government of India, Military Department.	6, Esplanade, East ..	ditto	
2645	Sen, R ...	District Health Officer, District No. I, Municipal Office.	79, Cornwallis Street ...	ditto	
2646	Sen, Romesh Chunder ...	Assessor, Income-tax ...	3, Charnock Place ...	ditto	
2647	Sen, S ...	Assistant, Shrager Brothers ...	28, Dalhousie Square ...	ditto	
2648	Sen, Sarat Chunder ...	Sub-Assessor, Municipal Office ...	Municipal Office ...	ditto	
2649	Sen, Saroda Persad ...	Personal Assistant to Inspector-General of Prisons, Bengal.	Writers' Buildings ...	ditto	
2650	Sen, Satis Chunder ...	License Inspector ...	Municipal Office ...	ditto	
2651	Sen, Surut Chunder ...	Cashier, Standard Life Assurance Co	32, Dalhousie Square ...	ditto	
2652	Sen Gupta, Purna Chunder	1st class clerk, Office of the Accountant-General, Military Department.	6, Esplanade Row, East ...	ditto	

2653	Sett, Baishnab Churn	...	Assistant, James Murray & Co	...	12, Government Place	...	ditto
2654	Sett, Dhan Ballav	...	Principal, Albert College	...	15, College Square	...	ditto
2655	Sett, Dino Nath	...	Clerk, Bird & Co	...	101-1, Clive Street	...	ditto
2656	Sett, Hari Das	...	1st clerk, Office of Superintending Engineer, Central Circle.		Writers' Buildings	...	ditto
2657	Sett, R N	...	Tailor and Milliner	...	29-2, Cornwallis Street	...	ditto
2658	Shaik, Meera Buksh	...	Clerk, Office of Pay Examiner, Military Accounts Department, E C.		3, Koila Ghât Street	...	Muhammadan
2659	Shastri, Ashutosh, M.A.	...	Lecturer, Sanskrit College	..	College Square	...	Hindu
2660	Shaw, Joy Kristo	...	Engraver, Engraving Department, Surveyor-General's Office.		13, Wood Street	...	ditto
2661	Shaw, Kali Kumar	...	Clerk, Printing Department, E I R		E I R House	...	ditto
2662	Shaw, Pran Kissen	...	Sree Kissen Shaw & Brothers	...	219, Old China Bazar Street	.	ditto
2663	Shome, H D	...	Partner, Tevor & Co	...	14, Old Court House Lane	...	ditto
2664	Shome, Poresh Chunder	...	Assistant, Bengal Secretariat, P W D		Writers' Buildings	...	ditto
2665	Shome, Sarat Soshi	...	Overseer, Municipal Office	...	61, Simla Street	...	ditto
2666	Shome, Sri Lal	...	Assistant Head Master, Hindu School.		College Square	...	ditto
2667	Showkat Ali	...	Trader	...	Upper Circular Road	...	Muhammadan
2668	Sil, Goocol Nath	...	Assistant, Bengal Secretariat, P W D		Writers' Buildings	...	Hindu
2669	Sing, Doorga Dass	...	Cashier, I R G P T W & Co, Ld	...	1-1, Fairlie Place	...	ditto
2670	Sing, H L	...	Assistant, Mackinnon, Mackenzie & Co.		16, Strand	...	Christian
*2671	Singh, Kesar	...	Clerk, Home Department	...	Home Department	...	Hindu
2672	Singh, Khetter Mohun	...	Inhabitant	...	15, Rajendro Nath Sen's Lane, Kassaripara.		ditto
*2673	Singh, Lutchman	...	7th class clerk, Secretariat, Government of India, P W D.		Imperial Secretariat Buildings		ditto
2674	Singh, Priya Nath	...	4th class Assistant, Office of Controller of Military Accounts, E C, Supply and Transport Branch.		3, Koila Ghât Street	...	ditto
2675	Singha, Benode Behary	..	Assistant, Bengal Office, Judicial, Political and Appointment Departments.		Writers' Buildings	...	ditto
2676	Singha, Benode Behary	...	Assistant to Director of Public Instruction, Bengal.		Writers' Buildings	...	ditto

No.	Name	Style or Calling	Residence or place of business.	Religion.	Remarks.
*2677	Singha, Devendra Nath ...	Jr. 2nd class clerk, Lower Division, Office of Secretary to the Government of India, Military Department.	6, Esplanade, East ...	Hindu	
2678	Singha, Jogendra Lal ...	Education Department, Presidency College.	College Square	ditto	
2679	Singha, Nava Gopal ...	Accountant, Office of Government Examiner of Railway Accounts. P W D.	E I R House ...	ditto	
*2680	Singha, Purushottom ...	Clerk, Home Department ...	Home Department ...	ditto	
2681	Singha Roy, Bidhu Bhusan	Assistant, Office of Inspector-General of Civil Hospitals and Sanitary Commissioner for Bengal.	Writers' Buildings ...	ditto	
*2682	Sircar, A K ...	Assistant, Office of Secretary to the Government of India, Revenue and Agricultural Department, Emigration Branch.	Imperial Secretariat Buildings	ditto	
*2683	Sircar, Charoo Chunder ..	Superintendent, Home Department ...	Home Department ...	ditto	
2684	Sircar, Davendra Nath ...	Clerk, Standard Life Assurance Co	32, Dalhousie Square ...	ditto	
2685	Sircar, Dheer Kristo ...	Deputy Treasurer, Government House, Office of Private Secretary to the Viceroy.	6, Council House Street ...	ditto	
2686	Sircar, Heera Laul ...	Assistant, Harold & Co ...	3, Dalhousie Square ...	ditto	
2687	Sircar, Hem Chander (Rai Bahadur).	Treasurer, Government House, Office of Private Secretary to the Viceroy.	6, Council House Street ...	ditto	
2688	Sircar, Hurrish Chandra ...	Clerk, Office of Consulting Engineer to the Government of India for Railways.	E I R House ...	ditto	
2689	Sircar, Nani Lall ...	Bustee Assessor, Municipal Office ...	Municipal Office ...	ditto	
2690	Sircar, Nitto Gopal ...	Shed Officer, Office of the Calcutta Port Commissioners.	Strand Road ...	ditto	
2691	Sircar, Paresh Nath ...	2nd Clerk of Works, Office of the Calcutta Port Commissioners.	Strand Road ...	ditto	

2692	Sircar, Ram Dass	...	Superintendent, Comptroller General's Office.	The Treasury	...	ditto
2693	Sircar, Sristidhur	...	Head Clerk, Martin & Co	...	Jackson House	...	ditto
*2694	Soondar Lall	...	7th class clerk, Secretariat, Government of India, Public Works Department.	Imperial Secretariat Buildings		ditto
2695	Superiwalla, N S	...	Assistant, E D Sassoon & Co	...	2 & 3, Clive Row	...	Parsee
2696	Sur, Jogendra Nath	...	Assistant, Finlay, Muir & Co	...	1, Clive Street	...	Hindu
2697	Sur, K N	...	Assistant, K C Biswas & Co	...	1, Chowringhee	...	ditto
	T						
2698	Tarafdar, Panchanon	...	Overseer, Calcutta Waterworks Municipal Office.	5, Corporation Street	...	ditto
	V						
2699	Vasvani, T L	...	Professor, Metropolitan Institution	...	Sunker Ghose's Lane, Bar Simla.	ditto
2700	Venkataram Aiyar, A V	...	Clerk, Comptroller-General's Office	...	The Treasury	...	ditto
2701	Vidyasagara, Jibananda	...	Free Sanskrit College	...	2, Romanath Mozumdar's Street.	ditto
	W						
*2702	Wahid Hussein, Saiyad	...	Clerk, Foreign Office	...	Esplanade, West	...	Muhammadan

NOTE.—The Jurymen whose names are marked with asterisks are available only during the months of December, January, February, and March.

W. R. FINK,

Registrar and Clerk of the Crown.

SPECIAL JURY LIST.

List of Persons liable to serve on Special Juries in the High Court of Judicature at Fort William in Bengal for the year ensuing from 1st May 1905, pursuant to Act V of 1898.

No.	Names.	Style or Calling.	Residence or place of business.	Religion.	Remarks.
	A				
1	Ackland, W F	Traffic Manager, E I R	E I R House	Christian	Revised lists will be published on the 26th day of April. Any person who deems himself for any [reason wrongly included in this list should address the Clerk of the Crown on the subject immediately, as the revised list will be final Errors in name and description can be corrected on communication to the office of the Clerk of the Crown.
2	Adams, A C	Manager, The Arracan Co, Ld	28, Dalhousie Square	ditto	
3	Aitken, W R T	Partner, Kettlewell, Bullen & Co	21, Strand Road	ditto	
4	Aldam, W C	Partner, W S Cresswell & Co	10, Hare Street	ditto	
5	Anderson, Geo. Lane	Resident Manager, New York Life Insurance Co	8, Old Court House Street	ditto	
6	Apcar, G	Assistant, Apcar & Co	19, Radha Bazar	ditto	
7	Ashton, H S	Partner, Shaw, Wallace & Co	20, Strand Road	ditto	
	B				
8	Bailey, W L	Partner, Baleh, Bailey & Co	15, Hare Street	Christian	
9	Baker, J W	Partner, Barry & Co	5, Lyons Range	ditto	
10	Bashford, T B St John	Chief Auditor, E I R	E I R House	ditto	
11	[illegible]son, H	Partner, Gillanders, Arbuthnot & Co	8, Clive Street	ditto	
12	Bathgate, John	Signs the firm of Shrager Brothers	28, Dalhousie Square	ditto	
13	Bayley, W E	Partner, Perman and Hynd	23, Strand Road	ditto	
14	Begg, H C	Partner, Begg, Dunlop & Co	12, Mission Row	ditto	
15	Benthal, H E	Chief Auditor and Accountant, B C R	Bow Bazar Street	ditto	
16	Bertram, J R	Partner, Gladstone, Wyllie & Co	101, Clive Street	ditto	
17	Blair, A J F	Editor, *Englishman*	9, Hare Street	ditto	
18	Blair, D C	Signs the firm of Finlay, Muir & Co	1, Clive Street	ditto	
19	Boyd, L	Partner, Blacker & Co	2, Clive Street	ditto	

20	Bradshaw, W J	...	Director, Walter, Locke & Co, Ld. ...	4, Esplanade	...	ditto
21	Brown, W	...	Signs the firm of Finlay, Muir & Co	1, Clive Street	...	ditto
22	Bruce, T W L	...	Offg. Superintendent, Depositors' Department, Bank of Bengal.	Strand	...	ditto
23	Bushby, W	...	Proprietor, Steuart & Co ...	8, Old Court House Corner	...	ditto
	C					
24	Calvocoressi, M J	...	Manager, Ralli Brothers ...	1 and 2, Church Lane	...	Christian
25	Cameron, P K	.	Agent, Hong Kong and Shanghai Banking Corporation.	31, Dalhousie Square	...	ditto
26	Campbell, D A	...	Partner, Begg, Dunlop & Co ...	12, Mission Row	...	ditto
27	Caw, R C	...	Partner, Shaw, Wallace & Co ..	20, Strand Road	...	ditto
28	Charles, F R S	...	Partner, George Henderson & Co ...	100, Clive Street	...	ditto
29	Chettle, E A	...	Partner, Shaw, Wallace & Co ...	20, Strand Road	...	ditto
30	Clark, J B	...	Partner, Landale and Clark ...	12, Clive Row	...	ditto
31	Coates, C H	...	Partner, Lovelock and Lewes ...	25, Mangoe Lane	...	ditto
32	Cohen, R M	...	Manager, David, Sassoon & Co, Ld ..	3, Fairlie Place	...	Jew
33	Craik, W R	...	Assistant, George Henderson & Co ...	100, Clive Street	...	Christian
34	Currie, Dan	...	Partner, Macneill & Co ...	2, Clive Ghat Street	...	ditto
	D					
35	Danby, C J	...	Partner, C & A Danby ...	14, Radha Bazar	...	Christian.
36	Davies, Walter	...	Partner, Hamilton & Co ...	8, Old Court House Street	...	ditto
37	Davis, G A	...	Superintendent, Jail Manufactures ...	Writers' Buildings	...	ditto
38	Dean, J G	...	Partner, Anderson, Wright & Co ...	22, Strand	...	ditto
39	Deane, E M	...	Depôt Manager, Army and Navy Co-operative Society, Ld.	41, Chowringhee	...	ditto
40	Dent, Arthur J	...	Partner, Gladstone, Wyllie & Co ...	101, Clive Street	...	ditto
41	deSchmid, C G H	...	Assistant, Commercial Union Assurance Co, Ld.	29, Dalhousie Square	...	ditto
42	Dickson, J G	...	Partner, Gladstone, Wyllie & Co ...	101, Clive Street	...	ditto
43	Dickson, W E G C	...	Signs the Firm of Jardine, Skinner & Co.	4, Clive Row	...	ditto
44	Dolton, J A	...	Manager, Thos. Cook & Son ...	9, Old Court House Street	...	ditto

No.	Names.	Style or Calling.	Residence or place of business.	Religion.	Remarks.
	D				
45	Dott, Alexander, S	... Partner, MacDowell & Co	... 7-1, Wellesley Place	...	Christian
46	Dowding, W K	... Partner, Turner, Morrison & Co	... 6, Lyon's Range	...	ditto
47	Dring, W A	... General Traffic Manager, E I R	... E I R House	...	ditto
48	Dykes, J A	... Partner, J A Dykes & Co	... 102, Clive Street	...	ditto
	E				
49	Eden, E B	... Proprietor, W Newman & Co	... 4, Dalhousie Square	...	Christian
50	Edie, D C D	... Agent, Allahabad Bank, Ld	... 101-1; Clive Street	...	ditto
51	Elles, E H	... Partner, Pigott, Chapman & Co	... 1, Mission Row	...	ditto
52	Ellis, C W	... Assistant, A Agelasto & Co	... 8, Clive Row	...	ditto
53	Elton, C J	... Assistant, Kilburn & Co	... 4, Fairlie Place	...	ditto
54	Ewing G	... Assistant Examiner, Office of Examiner, P W Accounts, Bengal.	Writers' Buildings	...	ditto
	F				
55	Forsyth, Alexander	... Partner, Graham & Co	... 9, Clive Street	...	Christian
56	Fraser, T	... Agent, Chartered Bank of India, Australia and China.	5, Council House Street	...	ditto
57	Froom, F	... Offg. Chief Superintendent, Traffic Department, E I R.	E I R House	...	ditto
58	Fyffe, Chas L	... Manager and Under-writer, Commercial Union Assurance Co, Ld.	29, Dalhousie Square	...	ditto
	G				
59	Gall, R L B	... Partner, Landale and Clark	... 12, Clive Row	...	Christian
60	Girard, W	... Partner, Bird & Co	... 101-1, Clive Street	...	ditto
61	Giro, C G	... Manager, Ralli Brothers	... 1 & 2, Church Lane	...	ditto
62	Glen, Andrew	... Assistant, Gladstone, Wyllie & Co	... 101, Clive Street	...	ditto
63	Goward, E A	... Partner, Walker, Goward & Co	... 32, Jackson Ghat Street	...	ditto
64	Graham, C W N	... Partner, Graham & Co	... 9, Clive Street	...	ditto

65	Grazebrooke, W G	...	Assistant, Gillanders, Arbuthnot & Co	8, Clive Street	...	ditto
66	Greenway, C	...	Partner, Shaw, Wallace & Co	20, Strand Road	...	ditto
67	Greig, D S K	...	Signs the firm of Finlay, Muir & Co	1, Clive Street	...	ditto
68	Gresson, R H A	...	Partner, Jardine, Skinner & Co	4, Clive Row	...	ditto
69	Gros, E F	...	Manager, International Banking Corporation.	27, Dalhousie Square	...	ditto
70	Grossmann, James	...	Partner, Grossmann & Co	2, Fairlie Place	...	ditto
71	Gubbay, E Sassoon	...	Manager, David Sassoon & Co, Ld	3, Fairlie Place	...	Jew
72	Gwyther, W B	...	Superintending Engineer, Central Circle.	Writers' Buildings	...	Christian
	H					
73	Haarbleicher, O G	...	Manager, Allen Brothers & Co	1, New China Bazar Street	...	Christian
74	Hadwen, J W	...	Partner, Perman and Hynd	23, Strand Road	...	ditto
75	Hamilton, D M	...	Member, Mackinnon, Mackenzie, & Co	16, Strand	...	ditto
76	Hamilton, Latham	...	Partner, Blacker & Co	2, Clive Street	...	ditto
77	Harper, J	...	General Manager, Marshall Sons & Co, Ld.	99, Clive Street	...	ditto
78	Harris, Geo P	...	Partner, Blacker & Co	2, Clive Street	...	ditto
79	Harris, H	...	Acting Accountant, Chartered Bank of India, Australia and China.	5, Council House Street	...	ditto
80	Hawke, Hon'ble E J	...	Managing Director, Bombay Company. Ld.	7-1, Lyons Range	...	ditto
81	Henderson, G	...	Partner, Octavius Steel & Co	14, Old Court House Street	...	ditto
82	Henson, A E	...	Partner, Andrew Yule & Co	7, Clive Row	...	ditto
83	Hickie, E G	...	Secretary, Trades' Association	Dalhousie Institute	...	ditto
84	Hill, W E	...	Assistant Secretary, Standard Life Assurance Co	32, Dalhousie Square	...	ditto
85	Hynd, D	...	Partner, Perman and Hynd	23, Strand Road	...	ditto
	J					
86	Jenkins, C	...	Partner, Hoare, Miller & Co	38, Strand Road	...	Christian
87	Johnston, J C R	...	Partner, Grindlay & Co	11, Hastings Street	...	ditto
88	Johnston, W C	...	Partner, Poppe, Delius & Co	15, Clive Row	...	ditto

No.	Name.	Style or Calling.	Residence or place of business.	Religion.	Remarks.
	J				
89	Jordan, A S	... Partner, J G Bagram & Co	... 14-2, Clive Row	...	Christian
90	Joshua, A R	... Partner, Perman & Hynd	... 23, Strand Road	...	Jew
	K				
91	Kelson, A Y	... Personal Assistant to Agent and Chief Engineer, B C R.	159-1, Bow Bazar Street	...	Christian
92	Kempthorne	... Manager, New Zealand Insurance Co	5-1, Council House Street	...	ditto
93	Ker, A J	... Manager, King, Hamilton & Co	... 7, Hare Street	...	ditto
94	King, D	... Managing Director, Bank of Calcutta, Limited.	7, Clive Row	...	ditto
95	Knight, Paul	... Proprietor, *Statesman*	... 3, Chowringhee	...	ditto
96	Knight, R	... Ditto	... Ditto	...	ditto
	L				
97	Langdon, W A	... Agent, Alliance Bank of Simla, Ld...	8, Council House Street	...	Christian
98	Larmour, F A	... Partner, C Lazarus & Co	... 60, Bentinck Street	...	ditto
99	Lawrie, P B	... Partner, Balmer, Lawrie & Co	... 103, Clive Street	...	ditto
100	Lewes, J H	... Partner, Lovelock and Lewes	... 25, Mangoe Lane	...	ditto
101	Lindsay, D	... Secretary, Royal Insurance Co	... 26-27, Dalhousie Square	...	ditto
102	Lomax, C P	... Partner, Lyall, Marshall & Co	... 25, Mangoe Lane	...	ditto
	M				
103	MacCabe, W B	... Chief Engineer, Municipal Office	... Municipal Office	...	Christian
104	Mackenzie, W L	... Partner, Kettlewell, Bullen & Co	... 21, Strand Road	...	ditto
105	Macleod, H	... Superintendent, Bengal Coal Co, Ld	5, Fairlie Place	...	ditto
106	Macpherson, D W	... Partner, Perman and Hynd	... 23, Strand Road	...	ditto
107	Magnus, T A	... Assistant, Davenport & Co	... 101-1, Clive Street	...	ditto

108	Main, J A	...	Director, A & J Main & Co, Ld	...	31, Dalhousie Square	... ditto
109	Malcolm, W S	...	Assistant, George Henderson & Co	...	100, Clive Street	... ditto
110	Martin, H P	...	Partner, Martin & Co	...	Jackson House	... ditto
111	Massey, Montague	...	Partner, Massey & Co	...	5, Clive Row	... ditto
112	Mathews, C D	...	Partner, Barry & Co	...	5, Lyons Range	... ditto
113	Mawdsley, R C	...	Partner, Norman Brothers	...	32, Dalhousie Square	... ditto
114	Maxwell, J T	...	Personal Assistant to Chief Engineer, E I R.		E I R House	... ditto
115	McCabe, J E	...	Partner, Bird & Co	...	101-1, Clive Street	... ditto
116	McDonald, J S	...	Partner, Mackintosh, Burn & Co	...	8, Esplanade, East	... ditto
117	McKay, J R F	...	Manager, Brooke, Bond & Co, Ld	...	5-1, Council House Street	... ditto
118	McLeod, N	...	Partner, McLeod & Co	...	31, Dalhousie Square	... ditto
119	Meugens, E E	...	Partner, Meugens, King and Simson		102, Clive Street	... ditto
120	Meugens, Marc	...	Partner, Meugens, King and Simson		102, Clive Street	... ditto
121	Miles, W H	...	Manager, James Mackillican & Co	...	7, Church Lane	... ditto
122	Moran, S	...	Partner, Carritt, Moran & Co	...	3, Mangoe Lane	... ditto
123	Morrison, W	...	Partner, Robbinson, Morrison & Co		5, Commercial Buildings	... ditto
124	Muir, W W	...	Signs the firm of Finlay, Muir & Co		1, Clive Street	... ditto
125	Munro, J A C	...	Signs the firm of Gillanders, Arbuthnot & Co		8, Clive Street	... ditto
126	Munro, W R	...	Sub-Manager, National Bank of India, Ld.		104, Clive Street	... ditto
127	Murray, G A	...	General Manager, Planters' Stores and Agency Company, Ld.		3, Mission Row	... ditto
128	Murray, Reg	...	Chief Manager, Commercial Bank of India, Ld.		5-1, Fairlie Place	... ditto
129	Myers, D B	...	Partner, J Thomas & Co	...	8, Mission Row	... ditto
130	Nicoll, John	...	General Manager, Thomas Duff & Co		15, Clive Row	... ditto

No.	Names.	Style or Calling.	Residence or place of business.	Religion.	Remarks.
	N				
131	Ninmo, J D	... Partner, Duncan Brothers	... 14, Clive Street	... Christian	
132	Norman, A F	... Partner, Norman Brothers	... 32, Dalhousie Square	... ditto	
	O				
133	Ormiston, G A	... Partner, Balmer, Lawrie & Co	... 103, Clive Street	... Christian	
134	Oswald, W W	... Manager, Standard Oil Co of New York.	8, Dalhousie Square	... ditto	
135	Overend, T B G	... Partner, Place, Siddons and Gough...	1, Commercial Buildings	... ditto	
	P				
136	Paterson, A S	... Assistant, Blackwood, Blackwood & Co.	12, Clive Street	... Christian	
137	Paterson, R Jardine	... Signs the firm of Jardine, Skinner & Co	4, Clive Row	... ditto	
138	Patterson, A C	... Partner, Becker, Gray & Co	... 7, Hastings Street	... ditto	
139	Patton, L P	... Partner, Patton & Co	... 2, Mangoe Lane	... ditto	
140	Percival, H M	... Education Department, Presidency College.	College Square	... ditto	
141	Peter, H T	... Partner, George Henderson & Co	... 100, Clive Street	... ditto	
142	Petrocochino, S D	... Partner, Petrocochino Brothers	... 4, Clive Street	... ditto	
143	Pettit, M H	... Assistant, George Henderson & Co	... 100, Clive Street	... ditto	
144	Phelps, W H	... Partner, Phelps & Co	... 15, Old Court House Street	... ditto	
145	Pointon, A	... In charge of I G N & Ry Co's affairs Kilburn & Co.	4, Fairlie Place	... ditto	
146	Power, Fred E H	... Assistant, Blackwood, Blackwood & Co	12, Clive Street	... ditto	
147	Preston, A	... Partner, Balmer, Lawrie & Co	... 103, Clive Street	... ditto	
148	Prophit, J M G	... Partner, Turner, Morrison & Co	... 6, Lyons Range	... ditto	
149	Prothero, M	... Education Department, Presidency College.	College Square	... ditto	
	R				
150	Ralli, T D	... Manager, Ralli Brothers	... 1 & 2, Church Lane	... Christian	
151	Robson, W	... Partner, Mackintosh, Burn & Co	... 8, Esplanade, East	... ditto	

152	Rodocanachi, J M	...	Partner, N J Valetta & Co	...	98, Clive Street	...	ditto
153	Rose, L E D	...	Partner, Mackenzie, Lyall & Co	...	2, Lyons Range	...	ditto
154	Ross, G F	...	Assistant Manager, South British Fire and Marine Insurance Co.		1, Lall Bazar Street	...	ditto
155	Russell, E W S	...	Partner, Lovelock and Lewes	...	25, Mangoe Lane	...	ditto
	S						
156	Scott, J W	...	Partner, J H Elliott & Co, Ld	...	29, Strand	...	Christian
157	Shallow, A W	...	Partner, Mackenzie, Lyall & Co	...	2, Lyons Range	...	ditto
158	Shorrock, Guy	...	Partner, Place, Siddons and Gough	...	1, Commercial Buildings	...	ditto
159	Shrager, C	...	Partner, Shrager Brothers	...	28, Dalhousie Square	...	ditto
160	Shrager, James	...	Ditto	...	Ditto	...	ditto
161	Siddons, F B	...	Partner, Place, Siddons & Gough	...	1, Commercial Buildings	...	ditto
162	Sinclair, James	...	Firm of Sinclair, Murray & Co	...	1, Clive Row	...	ditto
163	Sinclair, John	...	Broker	...	2, Clive Street	...	ditto
164	Smith, Lockhart	...	Partner, Williamson, Magor & Co	...	4, Mangoe Lane	...	ditto
165	Smith, O S	...	Executive Engineer, 1st Calcutta Division.		Writers' Buildings	...	ditto
166	Smith, T	...	Assistant Controller of Military Accounts, in charge Accounts Branch, E.C.		3, Koila Ghât Street	...	ditto
167	Smyth, F W	...	Signs the Firm of Kettlewell, Bullen & Co.		21, Strand Road	...	ditto
168	Speirs, J C	...	Agent, Bank of Calcutta, Ld	...	7, Clive Row	...	ditto
169	Staples, E W H	...	Agent & Chief Engineer, Bengal Central Railway.		159-1, Bow Bazar Street	...	ditto
170	Stephen, Henry, MA	...	Principal, Duff College	...	74, Nimtollah Ghat Street	...	ditto
171	Strain, J B	...	Partner, Bird & Co	...	101-1, Clive Street	...	ditto
172	Stuart, J	...	Manager, Mercantile Bank of India, Ld		28, Dalhousie Square	...	ditto
173	Sutcliffe, H W	...	Manager, Barlow & Co	...	37, Strand Road	...	ditto
174	Swan, Peter	...	Partner, Landale & Clark	...	12, Clive Row	...	ditto
	T						
175	Taylor, W H	...	Assistant Manager, King, Hamilton & Co.		7, Hare Street	...	Christian

No	Names.	Style or Calling.	Residence or place of business.	Religion.	Remarks.
	T				
176	Thomas, R A C	... Manager for India, Pelican and British Empire Life Office.	12, Dalhousie Square ...	Christian	
177	Thomas, R J P	... Partner, J Thomas & Co ..	8, Mission Row ...	ditto	
178	Thornton, E	... Architect, Martin & Co ...	Jackson House ...	ditto	
179	Topping, A	... Assistant, Macneill & Co ...	2, Clive Ghât Street ...	ditto	
180	Touch, W	... Manager, National Bank of India, Ld.	104, Clive Street ...	ditto	
181	Toynbee, R B	... Assistant, Kilburn & Co ...	4, Fairlie Place ...	ditto	
182	Traill, T	... Partner, O. Steel & Co ...	14, Old Court House Street ...	ditto	
183	Treble, H A T	... Superintendent, Loans and Discount, Bank of Bengal.	Strand ...	ditto	
184	Tremearne, S	... Proprietor and Editor, *Capital* ...	98, Clive Street ...	ditto	
185	Trevor, M	... Partner, Carritt, Moran & Co ...	9, Mission Row ...	ditto	
186	Turner, J	... Partner, Hoare, Miller & Co ...	38, Strand ...	ditto	
	W				
187	Walker, G W	... Partner, H D Cartwright & Co ...	13, Clive Street ...	Christian	
188	Wallis-Whiddett, F G	... General Manager, Cutler, Palmer & Co.	1, Hastings Street ...	ditto	
189	Walmsley, W H	... Firm of Kellner & Co ...	32, Chowringhee Road ...	ditto	
190	Warrington, W	... Signs the firm of Finlay, Muir & Co	1, Clive Street ...	ditto	
191	West, J D	... Partner, J Thomas & Co ...	8, Mission Row ...	ditto	
192	Wibley, C T	... Partner, Cooke & Kelvey ...	20, Old Court House Street ...	ditto	
193	Williamson, R L	... Partner, Williamson, Magor & Co ...	4, Mangoe Lane ...	ditto	
194	Wilson, J C	... Managing Editor, *Indian Daily News*	19, British Indian Street ...	ditto	
195	Wood, H	... Secretary to Agent, E I R ...	E I R House ...	ditto	
196	Wood, Herbert D	... Sub-Manager, The Arracan Co, Ld ...	28, Dalhousie Square ...	ditto	
197	Woodhouse, E A	... Partner, W. S. Cresswell & Co ...	10, Hare Street ...	ditto	
198	Wright, E J	... Manager, Delhi and London Bank, Limited.	4, Council House Street ...	ditto	
	Y				
199	Yule, Andrew	... Partner, Andrew Yule & Co ...	7, Clive Row ...	Christian	
200	Yule, David	... Ditto ...	Ditto ...	ditto	

	A			
201	Acharya, Satish Chandra ...	Professor, Presidency College ...	College Square ...	Hindu
202	Addy, Behary Lall (Rai Sahib).	Head Assistant, Office of Superintending Engineer, Public Works Department, Bengal, South-Western Circle.	Writers' Buildings ...	ditto
203	Agurwalla, Chotoorbhooj ...	Merchant ...	18, Armenian Street ...	ditto
204	Agurwalla, Luchmeechand	Ditto ...	4, Muddon Mohun Chatterjee's Lane.	ditto
205	Ahmad Shams-ul-Ulama ...	Head Maulvi, Calcutta Madrasa ...	Calcutta Madrassa ...	Muhammadan
206	Ariff, Gholam Hossain ...	Merchant ...	Amratolla Lane ...	ditto
	B			
207	Bagchee, Annada Prosad ...	Head Master, Government School of Art.	Chowringhee ...	Hindu
208	Banerjee, Gungadhur, MA	Proprietor, New Indian School ...	159 & 160, Cornwallis Street	ditto
209	Banerjee, Hridya Chandra	Education Department, Presidency College.	College Square ...	ditto
210	Banerjee, Jamini Nath ...	Principal, Calcutta Deaf and Dumb School.	4, College Square ...	ditto
211	Banerjee, Kherode Gopal ...	Merchant ...	13, Fordyce's Lane ...	ditto
212	Bhattacharjee, Kali Prasanna.	Professor, Presidency College ...	College Square ...	ditto
213	Bhattacharjee, Narayan Chunder.	Bengali Translator to Government ...	Writers' Buildings ...	ditto
214	Bose, Atul Krishna ...	Inspector, Standard Oil Co of New York.	Sukea's Street ...	ditto
215	Bose, Benode Behary ..	Zamindar ...	Bag Bazar ...	ditto
216	Bose, Bolye Chunder ...	Inhabitant ...	7, Gopal Chunder's Lane, Colootollah.	ditto
217	Bose, Boykanto Nath (Rai Bahadur).	Bullion-keeper, Mint ...	Strand ...	ditto
218	Bose, Girindra Nath ...	Zamindar ...	Harrison Road ...	ditto
219	Bose, Girish Chunder ...	Proprietor and Principal, Bangabashi College.	Bow Bazar ...	ditto
220	Bose, Gopal Chunder ...	Merchant ...	Bose's Lane, Colootollah ...	ditto
221	Bose, Dr. Jagadis Chandra, CIE	Education Department, Presidency College.	College Square ...	Theist

No.	Names	Style or Calling.	Residence or place of business.	Religion.	Remarks.
	B				
222	Bose, Khogendro Nath ...	Assistant, Kettlewell, Bullen & Co ...	21, Strand Road ...	Hindu	
223	Bose, Khudiram ...	Proprietor and Principal, Central College.	71-2, Cornwallis Street ...	ditto	
224	Bose, Kunja Behari ...	Personal Assistant to Director of Public Instruction, Bengal.	Writers' Buildings ...	ditto	
225	Bose, Poshoopoti Nath ...	Zamindar ...	Bag Bazar ...	ditto	
226	Bysack, Lall Behary ...	Landholder ...	3 & 3-1, Bysack's Lane ...	ditto	
	C				
227	Chatterjee, Pramatha Nath, MA.	Professor, Duff College ...	74, Nimtollah Ghât Street ...	Hindu	
228	Chatterjee, Preonath ...	Landholder ...	6, Mudon Mohan Chatterjee's Lane.	ditto	
229	Chatterjee, Ramani Mohon, MA.	Collector, Municipal Office ...	Municipal Office ...	Brahmo	
230	Chatterjee, Shashendra Bhushan.	Landholder ...	34-1, Beadon Street ...	Hindu	
231	Chowdhry, Bunwari Lall, BA, BSC. (Edin).	Zamindar ...	282, Upper Chitpur Road ...	ditto	
232	Chowdhry, Chandi Charan	Ditto ...	18-1, Jaun Bazar Street ...	ditto	
233	Chowdhry, Prosonno Coomar	Ditto ...	Ditto ...	ditto	
234	Chowkhany, Ramdeo ...	Banian and Merchant ...	Harrison Road ...	ditto	
235	Chunder, Soobul Chand ...	Firm of S C Chunder & Co ...	2, Radha Bazar Lane ...	ditto	
	D				
236	Das, Amarnath ...	Assistant Engineer, Circular and Eastern Canals Division.	Writers' Buildings ...	ditto	
237	Das, Amrita Nath ...	Zamindar ...	Jaun Bazar Street ...	ditto	
238	Dass, Saroda Prasanna ...	Professor, Presidency College ...	College Square ...	ditto	
239	Dass Gupta, Jogendro Nath	Education Department, Presidency College.	Ditto ...	ditto	
240	De, H N ...	Ditto ...	Ditto ...	ditto	
241	Deb, Kumar Roopendra Krishna.	Landholder ...	Raja Nobokissen's Street ...	ditto	

242	Dey, Gouri Sunkar, MA.	...	Professor, General Assembly's Institution.	...	Cornwallis Square	...	ditto
243	Dey, Hem Chunder, MA.	...	Professor, Bethune College	...	181, Cornwallis Street	...	ditto
244	Dey, Preo Lall	...	Landholder	...	4, Beadon Street	...	ditto
245	Dutt, Bejoy Kissen	...	Zamindar	...	Hatkhola	...	ditto
246	Dutt, Dhirendro Nath	...	Banian, Ralli Brothers	...	Cornwallis Street	...	ditto
247	Dutt, Hurry Dhone	...	Merchant	..	3, Shib Kristo Daw's Lane	...	ditto
248	Dutt, Jogesh Chunder	...	Landholder	...	Wellington Square	...	ditto
249	Dutt, Khetter Chunder	...	Deputy Bullion-keeper, Calcutta Mint		Strand	...	ditto
	G						
250	Ganguli, Kumode Prokash		Zamindar	...	12, Prasanna Coomar Tagore's Street.		Hindu
251	Ganguli, Nalin Prakash	...	Ditto	...	Ditto		ditto
252	Ganguli, Satya Persad	...	Ditto	...	6, Dwarka Nath Tagore's Street.		ditto
253	Ganguli, Seah Prokash	...	Ditto	...	12, Prasanna Coomar Tagore's Street.		ditto
254	Ghatak, M K	...	Assistant Comptroller-General	...	The Treasury	...	ditto
255	Ghose, Aukshoy Coomar	...	Zamindar	...	3, Jorabagan Street	...	ditto
256	Ghose, Baroda Prosad	...	Education Department, Presidency College.		College Square	...	ditto
257	Ghose, Ganendra Chunder		Landholder	...	1, Simla Street	...	Christian
258	Ghose, Hurro Cally	...	Assistant, Kettlewell, Bullen & Co	...	21, Strand	...	Hindu
259	Ghose, Isan Chunder	...	Head Master, Hare School	...	College Square	...	ditto
260	Ghose, Jnan Chandra, MA.		Professor, Duff College	...	74, Nimtollah Ghât Street	...	ditto
261	Ghose, Kali Prosono	...	Landholder	...	Jorabagan Street	...	ditto
262	Ghose, Kali Prosono	...	Ditto	...	75, Beadon Street	...	ditto
263	Ghose, Monmohan	...	Education Department, Presidency College.		College Square	...	Theist
264	Ghose, Motilal	...	Editor, *Amrita Bazar Patrika*	...	2, Ananda Chunder Chatterjee's Lane, Bagbazar.		Hindu

No.	Names.	Style or Calling.	Residence or place of business.	Religion.	Remarks.
	G				
265	Ghose, Saroda Prosad, MA.	Head Master, Metropolitan Institution	Sanker Ghose's Lane ...	Hindu	
266	Ghose, Sarut Chunder ...	Landholder ...	Baranussy Ghose's Street, Jorasanko.	ditto	
267	Goenka, Mooralydhar ...	Inhabitant ..	Banstolla Street ...	ditto	
268	Goenka, Ram Kumar ...	Zamindar and Merchant ...	4, Sovaram Byzak's Lane ...	ditto	
269	Goho, Hari Charan ...	Zamindar ...	Musjeedbaree Street ...	ditto	
270	Goho, Khetter Churn ...	Banian ...	85, Cornwallis Street ...	ditto	
271	Gosain, Hem Chundra ...	Landholder ...	Park Street ...	ditto	
272	Gupta, Balmookund ...	Editor, *Bharat Mihir* ..	Mooktaram Babu's Street ...	ditto	
273	Gupta, Gopal Chunder ...	Landholder and Merchant ...	5, Middleton Street ...	ditto	
274	Gupta, Nanda Lall ...	Ditto ...	Gupta's Lane, Jorasanko ...	ditto	
	J				
275	Jalan, Joylall ..	Partner, Ramnarayan Joylall ...	Cotton Street ...	Hindu	
	K				
276	Kar, Radharaman ...	Landholder ...	107, Sham Bazar Street ...	Hindu	
277	Karforma, Surja Kumar, MA.	Professor, Duff College ...	74, Nimtollah Ghât Street ...	ditto	
278	Khan, Kanailal ...	Merchant and Landholder ...	81, Durmahatta Street, Hatkhola.	ditto	
	L				
279	Laik, Mukunda Lal ...	Partner, M. L. Laik & Banerjee & Banerjee & Co.	7, Swallow Lane ..	Hindu	
280	Law, Ambica Churn ...	Merchant ...	Sukea's Street ...	ditto	
281	Law, Chandi Churn ...	Ditto ...	Cornwallis Street, Tuntunia ...	ditto	
282	Law, Gaur Mohan ...	Ditto ...	Sukea's Street ...	ditto	
283	Law, Gocool Chandra ...	Ditto ...	Tuntunia ...	ditto	
284	Law, Hari Mohan ...	Landholder ...	92, Mooktaram Babu's Street	ditto	
285	Law, Maharaj Kumar Kristo Dass.	Merchant ...	Tuntunia ...	ditto	
286	Law, Maharaj Kumar Rasheekeah.	Ditto ...	ditto ...	ditto	

287	Maitra, Herumbo Chunder, MA	Professor, City College	...	13, Mirzapore Street	...	Brahmo
288	Mehta, R D, CIE ...	Partner, D B Mehta & Co	...	55, Canning Street	...	Parsee
289	Mirza, Shajaut Ali, Khan Bahadur.	Landholder	...	7, Rawdon Street	...	Muhammadan
290	Mitter, Amrito Nath (Rai Bahadur).	Zamindar	...	33, Mooktaram Babu's Street		Hindu
291	Mitter, J C ...	Deputy Comptroller, India Treasuries		The Treasury	...	ditto
292	Mitter, Kumar Monmotho Nath.	Landholder	...	Jhamapukur Lane	...	ditto
293	Mitter, Kumar Norendro Nath.	Ditto	...	ditto	...	ditto
294	Mitter, N G ...	Partner, J A Dykes & Co	...	102, Clive Street	...	ditto
295	Mitter, Protap Chand ...	Zamindar	...	7-4, Beadon Street	...	ditto
296	Mitter, P N ...	Ditto	...	Ashcroft Hall, Raj Bullub's Street.		ditto
297	Mitter, Roy Bepin Behary	Landholder	...	226, Upper Circular Road	...	ditto
298	Mitter, Roy Promotho Nath	Ditto	...	ditto	...	ditto
299	Mitter, Sarat Chunder ...	Zamindar	...	12, Shib Narain Dass' Lane		ditto
300	Mitter, Sharat Chunder ...	Ditto	...	98, Machua Bazar Street	...	ditto
301	Mitter, Shotish Chunder ...	Inhabitant	...	20, Raja's Lane	...	ditto
302	Mitter, Sures Chundra ...	Banian	...	5, Garstin's Place	...	ditto
303	Mohalanobis, Subodh Chandra.	Professor, Presidency College	...	College Square	...	Theist
304	Mookerjee, Adhar Chandra	Education Department, Presidency College.		ditto	...	ditto
305	Mookerjee, Adhar Chunder	Professor, General Assembly's Institution.		Cornwallis Square	...	Hindu
306	Mookerjee, Aditya Nath ...	Professor, Presidency College	...	College Square	...	ditto
307	Mookerjee, Annoda Prosonno	Landholder	...	Ripon Street	...	ditto
308	Mookerjee, Bejoy Gopal, MA	Professor, Bethune College	...	181, Cornwallis Street	...	ditto
309	Mookerjee, Girish Chandra, MA	Assistant Registrar, Calcutta University.		Senate House	...	ditto

No.	Names.	Style or Calling.	Residence or place of business.	Religion.	Remarks.
	M				
310	Mookerjee, Jaladhi Chandra	Zamindar	... 12, Prasanna Coomar Tagore's Street.	Hindu	
311	Mookerjee, Jnanendra Chandra, MA	Professor, Duff College	... 74, Nimtollah Ghât Street ...	ditto	
312	Mookerjee, Nara Nath ...	Assistant, Graham & Co	... 9, Clive Street ...	ditto	
313	Mookerjee, Rajendra Nath	Partner, Martin & Co	... 20, Beadon Street ...	ditto	
314	Mookerjee, Syama Das ...	Professor, Presidency College	... College Square ...	ditto	
315	Mullick, Charoo Chunder ...	Landholder	... Putuldanga ...	ditto	
316	Mullick, Narendro Nath ...	Assistant, Kerr, Tarruck & Co	... 11, Clive Street ...	ditto	
317	Mullick, N ...	Landholder	... Dhurrumtollah ...	ditto	
318	Mullick, Promotho Nath ...	Ditto	... Pathuriaghatta Street ...	ditto	
	N				
319	Neyogi, Harish Chandra ...	Landholder	... Bag Bazar ...	Hindu	
	P				
320	Paul, Radha Churn ...	Landholder	... Baranushee Ghose's Street ...	Hindu	
321	Paul, Srinath (Rai Bahadur).	Sole Proprietor, Y. Artin & Co	... 43, Radha Bazar Street ...	ditto	
	R				
322	Roy Chowdhury, Manmatha Nath.	Zamindar	... Beadon Street ...	Hindu	
323	Roy Chowdhury, Promotho Nath.	Ditto	... 35-2, Beadon Street ...	ditto	
324	Roy Chowdhry, Soorja Kanto	Ditto	... 112, Amherst Street ...	ditto	
325	Roy, Kali Narain ...	Manager to Paikpara Raj Estate	... 19-4, Mudden Mitter's Lane ...	Brahmo	
326	Roy, Khogendra Nath ...	Inhabitant	... Jagadish Nath Roy's Lane, Simla.	Hindu	
327	Roy, Kumar Dinendra Narain.	Ditto	... 1, Gupta's Lane, Jorasanko ...	ditto	

328	Roy, Muralidhur	...	Inhabitant	...	Hatkhola	... ditto
329	Roy, Parbatty Sanker	...	Zamindar	...	44, European Asylum Lane	... ditto
330	Roy, Peary Mohun	...	Ditto	...	Amherst Street	... ditto
331	Roy, P K	...	Offg. Principal, Presidency College	...	College Square	... Theist
332	Roy, Sita Nath (Rai Bahadur).		Merchant	...	68, Sova Bazar Street	... Hindu

S

333	Seal, Dunialall	...	Zamindar	...	83, Upper Chitpur Road	... Hindu
334	Seal, Guru Dass	...	Banian	...	17, Muktaram Babu's Street	ditto
335	Seal, Kundun Lall	...	Zamindar	...	19-1, Muktaram Babu's Street.	ditto
336	Seal, Mohun Lal	...	Banian, Gladstone, Wyllie & Co	...	101, Clive Street	... ditto
337	Seal, Sham Lall	...	Zamindar	...	19-1, Muktaram Babu's Street.	ditto
338	Seal, Sreedam Chunder	...	Firm of Gosto Behary Seal	...	28-1, Serpentine Lane	... ditto
339	Sein, Wooma Kanto	...	Partner, Tacoor Dass Sein and Raj Narain Dhur.		6, New China Bazar Street	... ditto
340	Sen, Atal Coomar	...	Landholder	...	10, Rajender Nath Sen's Lane	ditto
341	Sen, Benoyendra Nath	...	Education Department, Presidency College.		College Square	... Brahmo
342	Sen, Gopi Bhusan	...	Demonstrator, Presidency College	...	College Square	... Hindu
343	Sen, Paresh Nath, BA	...	Professor, Bethune College	...	181, Cornwallis Street	... ditto
344	Sen, Sunut Coomar	...	Banian, Bengal Bonded Warehouse Association.		102, Clive Street	... ditto
345	Sett, Ram Lal	...	Zamindar	...	Bara Bazar	... ditto
346	Shastri, Hara Prosad	...	Principal, Sanskrit College	...	College Square	... ditto
347	Shastri, Rajendra Chandra (Rai Bahadur).		Librarian, Bengal Library	...	Writers' Buildings	... ditto
348	Siddiq, Abul Khair Mahomed (Shams-ul-ulama).		Education Department, Presidency College.		College Square	... Muhammadan

No.	Names.	Style or Calling.	Residence or place of business.	Religion.	Remarks.
	S				
349	Singh, Bijoy Chunder ...	Landholder ...	147, Baranussy Ghose's Street	Hindu	
350	Singh, Hem Chunder ...	Zamindar ...	145, ditto ...	ditto	
351	Singh, Jogesh Chunder ...	Landholder ...	85, Upper Circular Road ...	ditto	
352	Sircar, Annoda Prosad (Rai Sahib).	Executive Engineer, 2nd Calcutta Division.	Writers' Buildings ...	ditto	
353	Sircar, Birendra Nath ...	Assistant, Kerr, Tarruck & Co ...	11, Clive Street ...	ditto	
	T				
354	Tagore, Abanindra Nath ...	Zamindar ...	6, Dwarkanath Tagore's Street	Hindu	
355	Tagore, Gayanendra Nath...	Ditto ...	6, ditto ...	ditto	
356	Tagore, Hitendra Nath ...	Ditto ...	6, ditto ...	ditto	
357	Tagore, Joytirindra Nath ...	Ditto ...	6, ditto ...	ditto	
358	Tagore, Khiteendra Nath ...	Ditto ...	6, ditto ...	ditto	
359	Tagore, Ranendra Mohan ...	Ditto ...	11, Pathuriaghatta Street ...	ditto	
360	Tagore, Robindro Nath ...	Ditto ...	6, Dwarkanath Tagore's Street	ditto	
361	Tagore, Samarendra Nath ...	Ditto ...	6, ditto ...	ditto	
362	Tagore, Surendra Nath ...	Merchant and Landholder ...	6, ditto ...	ditto	
363	Trivedi, Ramendra Sunder, MA	Principal, Ripon College ...	60, Mirzapore Street ...	ditto	
	V				
364	Vidyaratna, Narayan Chandra.	Landholder ...	25, Sukea's Street ...	Hindu	

W. R. FINK,
Registrar and Clerk of the Crown.

REGISTERED No. C209.]

No. 15 of 1905.

SUPPLEMENT TO

The Calcutta Gazette.

WEDNESDAY, APRIL 12, 1905.

OFFICIAL PAPERS.

[Non-Subscribers to the GAZETTE *may receive the* SUPPLEMENT *separately on payment of fee rupee per annum if delivered in Calcutta, or seven rupees and eight annas if sent by post.]*

CONTENTS.

	Page.
REPORT of the Bruce Institution for the year 1904 ...	509
Weather and Crop Report for the week ending the 10th April 1905	513
Prices-current (retail and wholesale) of food-grains and salt in the head-quarters station bazars of the districts of Bengal on the 31st March 1905	516
Statement showing the quantities of the Principal staples of Traffic imported into and exported from Calcutta from the interior in the ten months April 1904 to January 1905	522
Circular and Eastern Canals for the week ending Saturday the 8th April 1905	526
ABSTRACT statement showing Tollage on Canals in Bengal classed as Major and Minor Works for the month of February 1905	529
Abstract of the Results of Meteorological Observations taken at the Alipore Observatory in the month of March 1905	530
Results of the Meteorological Observations taken at the Alipore Observatory from 2nd to 8th April 1905	531
East Indian Railway during the five weeks ending 31st December 1904	532
Weekly Return of Traffic Receipts on Indian Railways ...	534

REPORT OF THE BRUCE INSTITUTION FOR THE YEAR 1904.

NOTIFICATION.

No. 1929, dated the 11th April 1905.—The following is published for general information.

H. W. C. CARNDUFF,

Offg. Secy. to the Govt. of Bengal.

REPORT OF THE BRUCE INSTITUTION

FOR THE YEAR 1904.

1.—*Control.*—During the year under review, the Rev. Titus Lowe was appointed to be a Governor, *vice* the Rev. J. Robinson, D.D., whose term of office had expired. Mr. L. P. Pugh was absent from India for a period of about four months. His term of office having expired meanwhile, he was, on his return to India, re-appointed to be a Governor. Mr. D. M. Hamilton was appointed to be a Governor, *vice* Mr. Geo. Roddick, resigned.

The following is a list of the Governors at the close of the year:—

The Hon'ble the Chief Justice of Bengal ... ...
The Most Rev. the Lord Bishop of Calcutta ... ...
The Inspector-General of Civil Hospitals, Bengal ... ... } *Ex-officio.*
The Chairman of the Calcutta Municipality ... ...
The Director of Public Instruction, Bengal (Honorary Secretary)
The Hon'ble Mr. Justice Sale.
L. P. Pugh, Esq. (Barrister-at-law).
The Ven'ble Archdeacon Kitchin.
The Rev. Father A. Van de Mergel, S.J.
The Rev. Titus Lowe.
D. M. Hamilton, Esq.
W. W. Hornell, Esq. (Inspector of European Schools).

II.—*Capital and Income.*—The capital of the Institution stood, as in the previous year, at Rs. 10,51,200, of which Rs. 10,46,200 is held by the Comptroller-General in the form of a 3½ per cent. stock certificate of the year 1865, and the balance, Rs. 5,000 which is invested in 3½ per cent. Government securities is held by the Secretary and Treasurer, Bank of Bengal. The annual interest on the capital amounts to Rs. 36,792, which is placed to the credit of the Institution in the Bank of Bengal. The year opened with a balance of Rs. 17,834-10-3 and closed with a balance of Rs. 18,546-1-3.

III.—*Election, Vacancies, etc.*—The annual election was held in the month of January as usual. For the 20 vacancies advertised, 52 applications were received, and 20 girls were elected on the recommendation of a Sub-Committee consisting of the Ven'ble Archdeacon Kitchin, the Rev. J. E. Robinson, D.D., Father A. Van de Mergel and Mr. Geo. Roddick. Of the girls elected, five were placed in the Loreto Boarding School, Entally, five in the Loreto Orphanage, Entally, four in the Calcutta Girls' School, three in the Pratt Memorial School, and three in St. Paul's Mission School.

Of the girls who had been withdrawn during the year, twenty-five had attained the age of seventeen years, the limit ordinarily allowed under the rules, while one girl was removed for continuous absence without leave. Another girl who was not in good health was permitted to go for a few months to a hill school for a change, but no extra expense was incurred by the Bruce Institution on this account. Two other girls, who had recently recovered from illness, were permitted to attend school for a period of two months as day-scholars, while another girl who was suffering from asthma, was transferred from the Calcutta Free School to the Girls' High School at Allahabad. There were four deaths during the year. Of the girls who had left, one is learning cookery, type-writing, and shorthand, and is also being trained in hospital work in the school in which she was educated, while another girl is continuing her studies in the Technical class of the same school, and is also learning type-writing. Another girl has been retained by the school authorities to give general help, and receives in return board and lodging for her services.

At the close of the year there were 124 girls on the foundation, against 133 in the preceding year. They were distributed as follows:—

Loreto Convent, Entally—			
Boarding School	23		
Orphanage	26		
		—	49
Calcutta Girls' School			31
Pratt Memorial School			17
Calcutta Free School			8
La Martinière			6
St Paul's Mission Home			8
Protestant European Orphanage, Cuttack ...			2
Old Church Parochial Home			1
St. Vincent's Home			1
Girls' High School, Allahabad			1
Total ...			124

The following table affords particulars as to the class and religion of the foundationers at the close of the year :—

Class.	Roman Catholics.	Church of England.	Non-Conformists.	Total.
1. Orphans, or deserted by parents	17	12	8	37
2. Fatherless, or deserted by the father, or father incapable.	32	33	17	82
3 Father, or both parents alive	1	3	1	5
Total ...	50	48	26	124

IV.—*Education and Maintenance.*—The nature of the education imparted to the girls on the foundation is generally that prescribed for primary and middle schools for Europeans. In exceptional cases a higher education is given. Parents and guardians are allowed to choose any school for the education of their children or wards, who may be elected, provided that such a school has first been approved by Government as suitable for the education and maintenance of Bruce foundationers. A sum of Rs. 21-8-0 a month is paid for the education and maintenance of each girl in a Boarding School and Rs. 16 a month in an Orphanage. A sum of Rs. 40 is also allowed for each foundationer for an outfit on joining a boarding school, and Rs. 25 for the same purpose on joining an Orphanage. A girl is not ordinarily allowed to remain in school after she has attained the age of seventeen years, when an outfit grant of Rs. 50 is usually given to enable her to make a start in life. If, however, a girl elects to take up teaching as a profession, some extension of time is generally allowed, if the Governors consider her fit to take up higher studies. Four such extensions were granted during the year. Short extensions, not exceeding over a few months, are also generally allowed to enable foundationers to appear at the examinations held under the Code of Regulations for European Schools. Two such extensions were allowed during the year. The end sought is to fit the girls for a respectable and useful station in life.

The average monthly cost for the education and maintenance of each girl on the foundation amounted to Rs. 18-9-5, against Rs. 18-13-4, in the preceding year.

The total amount paid under the different heads of expenditure was as under :—

1903.	Rs	A.	P.	1904.	Rs.	A.	P.
Education and maintenance ..	34,428	0	0	Education and maintenance ...	33,157	14	3
Office establishment	834	0	0	Office establishment	834	0	0
Contingencies ..	23	6	0	Contingencies	26	4	0
Advertisement and printing ..	185	6	1	Advertisement and printing ...	234	6	1
Outfits	1,056	0	0	Outfits	1,640	0	0
Other charges ..	26	14	0	Funeral expenses	36	0	0
				Other charges	10	8	0
Total .	36,550	10	1	Total ..	35,989	0	4

V.—*Inspection.*—The Rev. Father A. Van de Mergel, S.J., was appointed Visiting Governor for the first-half, and the Rev. Titus Lowe for the second half of the year. Their reports were generally satisfactory. Father Van de Mergel states that though his visits were quite unexpected he found everything in a satisfactory state as regards the way in which the children are treated in the schools. The Rev. Titus Lowe states that he found the girls well cared for and happy, and that no complaints were lodged against any of the foundationers by those in charge. He also found the health of almost all the girls to be very good. Annual reports are also received from the school authorities, in regard to the conduct, application, progress, health, and attendance of the foundationers. These reports have generally been satisfactory.

VI.—*Meetings.*—Four meetings were held during the year, but there was no resolution of importance calling for special mention.

CALCUTTA;
The 6th March 1905.

A. PEDLER,
Honorary Secretary to the Governors.

WEATHER AND CROP REPORT.

For the week ending the 10th April 1905.

Burdwan.—Rainfall nil. Ploughing continues. Pressing of sugarcanes nearly over. Fodder and water sufficient. Cattle-disease reported from Kalna and Raniganj subdivisions. Common rice sells as follows:—

	Srs.	ch.	
Sadar	14	4	per rupee.
Kalna	12	8	
Katwa	14	15	
Raniganj	15	0	

Birbhum.—Rainfall nil. Weather seasonable. Sugarcane-pressing continues. Fodder and water sufficient. Common rice sells as follows:—

	Srs.	ch.	
Sadar	15	8	per rupee.
Rampur Hât	16	0	

Bankura.—Rainfall at Sadar nil, Vishnupur 0·15. Day hot, night cool. Ploughing continues. Sugarcane-pressing over. No cattle-disease. Fodder and water sufficient. Common rice sells as follows:—

	Srs	ch.	
Sadar	16	0	per rupee.
Vishnupur	16	4	

Midnapore.—Rainfall at Sadar 1·05, Contai nil, Tamluk 0·12, Ghatal 0·33. Land is being prepared for *aus*. Sugarcane is being planted, and jute sown. Fodder and water sufficient. Common rice sells as follows:—

	Srs.	ch.	
Sadar	15	0	per rupee.
Contai	18	0	
Tamluk	14	0	
Ghatal	14	0	

Hooghly.—Rainfall at Sadar nil, Serampore 0·04, Arambagh 0·06. Weather—day hot, night cool. Lands being ploughed for jute and paddy. No cattle-disease. Fodder and water sufficient. Common rice sells as follows:—

	Srs.	ch.	
Sadar	10	0	per rupee.
Serampore	11	3	
Arambagh	13	8	

Howrah.—Rainfall at Sadar 0·02. Weather seasonable. Soil is under preparation for paddy. Sugarcane still being planted. Fodder and water sufficient. Common rice sells as follows:—

	Srs.	ch.	
Sadar	12	0	per rupee.
Ulubaria	13	0	

24-Parganas.—Rainfall at Sadar 0·02, Barasat 0·02, Barrackpore 0·03. Weather seasonable. State and prospects of crops fair. Lands are still being prepared for *aus* and jute. Common rice sells at 12 seers per rupee. Some cases of cattle-disease are reported from Bistupur thana Supply of fodder and water sufficient.

Nadia.—Rainfall at Sadar 0·26, elsewhere nil. Weather seasonable, cloudy in Kushtia, nights cool. No standing crops. Ploughing of lands going on in Kushtia. Sowing of *aus* paddy has begun. Fodder and water sufficient. No cattle-disease reported. Common rice sells as follows:—

	Srs.	ch.	
Sadar	13	0	per rupee.
Kushtia	14	8	
Meherpur	12	0	
Chuadanga	13	0	
Ranaghat	13	0	

Murshidabad.—No rain. Weather seasonable. Harvesting of *rabi* continues. Outturn not good. Sowing of *aus* going on in places. Lands are being prepared for winter rice. No cattle-disease. Fodder and water sufficient. Common rice sells as follows:—

	Srs.	ch	
Sadar	13	0	per rupee.
Kandi	15	0	
Jangipur	15	0	
Lalbagh	13	0	

Jessore.—Rainfall at Sadar 1·66, Narail 0·50. Weather seasonable. Ploughing going on. Fodder and water sufficient. Common rice sells as follows:—

	Srs.	ch.	
Sadar	14	0	per rupee.
Jhenida	13	8	
Magura	13	0	
Narail	13	12	
Bangaon	13	5	

Khulna.—Rainfall at Sadar 1·93, Bagerhat 2·43, Satkhira nil. Weather variable. State of summer rice favourable. Jute-sowing estimated at 10 per cent. No cattle-disease. Fodder and water sufficient. Common rice sells as follows:—

	Srs.	ch.	
Sadar	16	0	per rupee.
Bagerhat	16	0	
Satkhira	13	0	

Rajshahi.—Rainfall nil. Weather cool at night. Ganja crop reaped, lands being prepared for jute and paddy. Sporadic cases of cattle-disease in three villages in Nator. Common rice sells as follows:—

	Srs.	ch.	
Sadar	14	0	per rupee.
Nator	13	12	
Naogaon	15	0	

Dinajpur.—Rainfall nil. Weather seasonable. Standing crops fair. Sowing of jute and *bhadoi* commenced in some places. Fodder and drinking-water sufficient. No cattle-disease. Common rice sells as follows:—

	Srs.	ch.	
Sadar	15	8	per rupee.
Balurghat	14	0	
Thakurgaon	13	0	

Jalpaiguri.—Rainfall nil. Weather a little cold. Harvesting of tobacco still continues. Fields for *bhadoi* paddy and jute are being prepared. Common rice sells at 13½ seers a rupee. Fodder and water sufficient. Cattle-disease reported from Falakata.

Darjeeling.—Rainfall nil. Weather seasonable. Wheat and barley doing good. Maize and potato being sown. *Terai*—Ploughing for *bhadoi* and jute going on. Coarse rice sells as follows:—

	Srs.	ch.	
Hills	9	0	per rupee.
Terai	14	0	

Maize sells at Darjeeling at 13 and at Kalimpong at 14 seers per rupee.

Rangpur.—No rain. Weather seasonable. Sowing of jute commenced. Standing crops doing well. Cattle-disease reported from places. Common rice sells as follows:—

	Srs.	ch.	
Sadar	13	0	per rupee.
Gaibanda	14	8	
Kurigram	15	0	
Nilphamari	14	8	

Bogra.—Rainfall at Sadar 0·25. Weather seasonable. Harvesting of *rabi* crops and Sugarcane almost finished, cultivation of lands for *aus* and jute continues. Fodder and water sufficient. No cattle-disease. Common rice sells at 14½ seers a rupee.

Pabna.—Rainfall at Sadar 0·87, Sirajganj nil. Weather fair and getting warm. Prospects of standing crops fair. Recent rain has been favourable for sowing of paddy and jute. Outturn of gram, rape and mustard is normal Common rice sells at 12 seers 12½ chitaks per rupee.

Dacca.—Rainfall at Sadar 2·63. Fall general. Prospects of crops good. Weather seasonable. Fodder available. No cattle-disease. Common rice sells as follows:—

	Srs.	ch.	
Sadar	15	0	per rupee.
Manikganj	13	0	
Munshiganj	14	0	
Narayanganj	14	0	

Mymensingh.—Rainfall at Kishorganj 0·06, Netrakona 0·38. Weather seasonable and cloudy. Jute, autumn rice, winter rice and sugarcane are being sown. Summer rice has suffered from hail in Kishorganj subdivision. Fodder and water ample. No cattle-disease. Common rice sells as follows:—

	Srs.	ch.	
Sadar	14	0	per rupee.
Jamalpur	16	0	
Kishorganj	14	13	
Netrakona	17	0	
Tangail	13	8	

Faridpur.—Rainfall at Sadar 1·64, Goalundo nil, Madaripur 0·84. Weather hot with cool night. Sowing of jute and paddy continues. Prospects of jute good. No cattle-disease. Fodder and water sufficient. Common rice sells at 12½ seers per rupee.

Backergunge.—Report not received.

Tippera.—Rainfall at Sadar 0·80, Brahmanbaria 2·00. Weather seasonable. Prospects good. Sowing of jute nearly completed in Chandpur. Harvesting of *rabi* and sowing of paddy going on. Fodder sufficient. Drinking-water bad in Chandnia. Cattle-disease reported. Common rice sells as follows :—

	Srs.	ch.	
Sadar	13	5	per rupee.
Brahmanbaria	15	3	
Chandpur	14	0	

Noakhali.—Rainfall at Sadar 0·43, Feni 0·24. Weather changeable. Prospects fair. Lands being ploughed for *aus* crops. Fodder and water sufficient. Cattle-disease reported. Common rice sells as follows :—

	Srs.	ch.	
Sadar	14	0	per rupee.
Feni	16	0	

Chittagong.—Rainfall at Sadar 1·74, Cox's Bazar 0·12. Weather not seasonable. Lands being ploughed for *aus* crops. No cattle-disease. Fodder and water sufficient. Common rice sells as follows :—

	Srs.	ch.	
Sadar	13	4	per rupee.
Cox's Bazar	15	12	

Chittagong Hill Tracts.—Rainfall ·19. Weather showery with thunder-storm. *Jooms* still unburnt. Cattle-disease around Sadar. Common rice sells at 14 seers per rupee.

Patna.—Rainfall nil. Weather seasonable. Harvesting of *rabi* completed. Threshing going on. Opium collection finished. Fodder and water sufficient. No cattle-disease. Common rice sells as follows :—

	Srs.	ch.	
Sadar	14	4	per rupee.
Barh	14	0	
Bihar	14	0	
Dinapore	14	8	

Gaya.—Rainfall nil. Weather hot. Harvesting of *rabi* crops and planting of sugarcane almost finished. Fodder and water sufficient. Common rice sells at 13½ seers per rupee.

Shahabad.—Rainfall nil. Harvesting of *rabi* and planting of sugarcane going on. Fodder and water sufficient. Common rice sells at 14 seers per rupee at Sadar.

Saran.—Rainfall nil. Weather seasonable. Harvesting of *rabi* and lancing of poppy practically completed, and threshing going on. No cattle-disease. Fodder and water sufficient. Common rice and maize sell at 13 and 19 seers per rupee at Sadar.

Champaran.—Rainfall nil. Harvesting of *rabi* continues. Opium collection almost finished. Lands being prepared for *bhadoi* crops. Paddy in low lands and China being sown. No cattle-disease. Fodder and water sufficient. Common rice and maize sell at 14½ seers and 22 seers per rupee respectively at Sadar.

Muzaffarpur.—Rainfall nil. Weather seasonable. Prospects of crops good. *Rabi* being threshed. Fodder and water sufficient. No cattle-disease. Common rice and maize sell at 13 and 19 seers per rupee respectively at Sadar.

Darbhanga.—Rainfall nil Harvesting of *rabi* in progress. Fodder and water sufficient. No cattle disease. Common rice sells as follows :—

	Srs.	ch.	
Sadar	15	14	per rupee.
Samastipur	16	0	
Madhubani	15	9	

Monghyr.—Report not received.

Bhagalpur.—Rainfall nil. Days are hot and nights are cool. *Rabi* harvesting going on. Cattle-disease reported from a few villages in Supaul subdivision. Fodder and water sufficient. Common rice sells as follows :—

	Srs.	ch.	
Sadar	15	0	per rupee.
Banka	13	12	
Madhipura	17	0	
Supaul	18	0	

Purnea.—Rainfall nil. Weather seasonable. Sowing of jute and *aghani* paddy in low lands commenced. No cattle-disease. Fodder and water sufficient. Common rice sells as follows :—

	Srs.	ch.	
Sadar	12	8	per rupee.
Kishanganj	12	12	
Araria	12	0	

Malda.—Rainfall nil. Weather seasonable. Sowing of *bhadoi* paddy commenced at places. Preparation of lands for jute in progress and sowing commenced at places. *Boro* paddy thriving. Gathering of wheat, barley and other *rabi* crops going on. No cattle-disease. Fodder and water available. Common rice sells at 13 seers per rupee at Sadar.

Sonthal Parganas.—Rainfall nil. Weather seasonable. Sugarcane doing well. *Mohua* being gathered. Prospects not favourable. Fodder and water sufficient. Common rice sells at 13 seers per rupee at Sadar.

Cuttack.—Rainfall nil. Weather seasonable. *Dalua* being harvested. Sugarcane being cut. Tobacco growing. Fodder and water sufficient. Common rice sells at $17\frac{1}{4}$ seers per rupee at Sadar.

Balasore.—Rainfall nil. Threshing of *saradh*, pressing of sugarcane and ploughing continue. *Dalua* ripening. Fodder and water sufficient. Common rice sells as follows:—

	Srs.	ch.	
Sadar	17	0	per rupee.
Bhadrak	20	0	

Angul.—Rainfall at Phulbani 1·21. Weather seasonable, occasionally cloudy. Fodder and water available. Common rice sells as follows :—

	Srs.	ch.	
Sadar	20	0	per rupee.
Khondmals	18	0	

Puri.—Rainfall at Sadar 0·08. Weather seasonable. *Mung* and castor ripening. Cotton and linseed progressing. Tobacco being reaped. *Dalua* ripening. Condition of other miscellaneous crops good. Lands being ploughed for ensuing paddy and sugarcane crops. Fodder and water sufficient. Cattle-disease reported from parts of Sadar and Gop thanas. Common rice sells at $17\frac{1}{4}$ seers per rupee at Sadar.

Hazaribagh.—Rainfall nil. Weather seasonable. Lands being ploughed. Sugarcane fields being digged. Cattle-disease reported from four thanas. Fodder and water sufficient. *Mohua* dropping commenced. Common rice sells as follows :—

	Srs.	ch.	
Sadar	12	8	per rupee.
Giridih	13	0	

Ranchi.—Rainfall at Sadar 0·20. Weather seasonable. Ploughing continues. *Tewa dhan* is being sown in places. Cattle-disease reported from eleven thanas. Fodder and water sufficient. Common rice sells as follows :—

	Srs.	ch.	
Sadar	13	0	per rupee.
Gumla	18	8	

Palamau.—Rainfall nil. Weather seasonable. *Rabi* being threshed. *Mohua* flowers falling. Sugarcane doing well. Cattle-disease reported. Fodder and water sufficient. Common rice sells at 13 seers per rupee at Sadar.

Manbhum.—Rainfall at Sadar 0·58. Weather seasonable. Prospects of crops good. Outturn of *arhar* and *mohua* estimated at 75 per cent. Fodder and water sufficient. Cattle-disease reported from three thanas. Common rice sells as follows :—

	Srs.	ch.	
Sadar	13	0	per rupee.
Gobindpur	12	0	

Singhbhum.—Rainfall 0·09. Lands being prepared for cultivation. Harvesting of *rabi* crops still going on in some parts of the district. Cattle-disease continues in thana Chakradharpur. Fodder and water sufficient. Common rice sells at 14 seers per rupee at Sadar.

General Summary.—Rain is reported from parts of Orissa and Chota Nagpur and the greater part of Bengal Proper, and the fall was moderately heavy in places. Harvesting of *rabi* and collection of opium approaching completion. Preparation of land for autumn crops continues and sowing has commenced. Prospects fair. Cattle-disease reported from 15 districts, but there is no want of fodder or water. The price of common rice has risen in twelve districts and fallen in five.

By order of the Lieutenant-Governor of Bengal,

R. W. CARLYLE,

Offg. Chief Secretary to the Govt. of Bengal.

REVENUE DEPARTMENT,

The 11th April 1905.

PRICES-CURRENT (retail) of Food-grains and Salt in the Head-quarters

Number.	DISTRICTS.	QUANTITIES PER RUPEE IN											
		WHEAT.			BARLEY.			RICE, COMMON.			JOWAR OR CHOLUM (*Sorghum Vulgare*).		
		Present return.	Next preceding return.	Corresponding return of last year.	Present return.	Next preceding return.	Corresponding return of last year.	Present return.	Next preceding return.	Corresponding return of last year.	Present return.	Next preceding return.	Corresponding return of last year.
	BENGAL.	S. Ch.	S. Ch.	S. Ch.	S. Ch.	S. Ch.	S. Ch.	S. Ch.	S. Ch.	S. Ch.	S. Ch.	S. Ch.	S. Ch.
BURDWAN DIVISION.													
1	Burdwan ...	13 8	13 0	13 0	...	...	...	14 4	14 4	13 4	...	...	...
2	Birbhum ...	12 0	12 0	13 8	...	...	...	15 0	15 8	13 8	...	...	...
3	Bankura ...	13 8	13 8	13 0	...	...	...	16 0	15 0	14 0	...	...	...
4	Midnapore ...	9 0	9 0	12 0	...	...	...	16 8	16 8	16 0	...	...	...
5	Hooghly ...	7 8	7 8	12 0	...	...	...	9 8	9 8	10 0	...	...	...
6	Howrah ...	...	...	13 4	...	...	20 0	12 4	12 0	12 0	...	...	...
PRESIDENCY DIVISION.													
7	24-Parganas ...	...	...	...	...	...	...	12 0	12 0	12 0	...	...	...
8	Calcutta ...	10 10	10 10	11 0	15 0	15 0	16 0	9 0	9 0	9 10	14 0	15 0	17 0
9	Nadia ...	14 9	...	15 0	17 12	...	20 0	12 13	12 13	12 8	...	...	...
10	Murshidabad ...	14 0	12 8	13 0	26 0	26 0	22 0	14 0	14 0	14 0	...	...	...
11	Jessore ...	9 0	10 0	10 8	Country 15 8 / Patna 11 4	11 4	Country 17 0 / Patna 12 0	14 0	14 4	16 0	...	...	...
12	Khulna ...	...	...	...	...	...	...	16 0	16 0	16 0	...	...	...
RAJSHAHI DIVISION.													
13	Rajshahi ...	15 0	15 0	13 0	21 4	26 4	24 0	12 12	12 13	15 0	...	...	...
14	Dinajpur ...	12 0	12 0	10 10	...	...	...	15 0	15 0	14 0	...	...	...
15	Jalpaiguri ...	11 0	12 0	11 0	...	...	...	13 0	13 8	14 0	...	...	...
16	Darjeeling ...	...	...	...	...	...	...	11 8	11 8	12 4	...	...	...
17	Rangpur ...	13 4	13 4	11 4	...	...	...	13 0	15 0	14 10	...	...	...
18	Bogra ...	11 4	12 12	14 1	...	...	...	14 4	14 4	13 12	...	...	...
19	Pabna ...	15 0	15 0	13 0	26 0	26 0	26 0	12 12½	12 12	16 8	...	...	...
DACCA DIVISION.													
20	Dacca ...	14 0	15 0	16 0	24 0	21 0	16 0	15 8	15 2	17 0	...	...	...
21	Mymensingh ...	12 8	12 8	11 8	11 8	11 6	11 4	14 0	15 0	14 0	...	...	...
22	Faridpur ...	20 0	16 0	13 0	26 0	20 0	20 0	12 8	12 8	16 0	...	...	...
23	Backergunge ...	...	...	...	...	...	...	13 8	14 4	15 0	...	...	...

A. In the subdivisions the retail prices of salt per rupee are—Kalna 13 seers; Katwa 12 seers 10½ chitaks, Raniganj 13 seers.

B. At Rampur Hát the retail price of salt is 13 seers per rupee.

C. At Vishnupur the retail price of salt is 14 seers per rupee.

D. In the subdivisions the retail prices of salt per rupee are—Contai 14 seers; Tamluk 12 seers; Ghatal 14½ seers.

E. In the subdivisions the retail prices of salt per rupee are—Serampore report not received; Arambagh 13 seers 13 chitaks.

F. At Uluberia the retail price of salt is 13 seers 14½ chitaks per rupee.

G. In the sadr in the interior of the district the retail prices of salt per rupee are—Chotia 13 seers 1 chitak; Baraset 13 seers 5 chitaks; Basirhat 13 seers 14 chitaks; Mograhat 12½ seers; Barrackpore 12½ seers.

H. In the subdivisions the retail prices of salt per rupee are—Kushtia 14 seers; Chuadanga 13½ seers (panga); Meherpur 12 seers; Ranaghat 14½ seers.

I. In the subdivisions the retail prices of salt per rupee are—Lalbagh 13 seers; Kandi 14 seers; Jangipur 13 seers.

J. In the subdivisions the retail prices of salt per rupee are—Jhenaida 13 seers; Magura 13 seers; Sadr 13 seers; Narail 12 seers.

SEERS OF 80 TOLAHS.

Bajra or Cumbu (*Pennisetum typhoideum*).			Marua or Ragi (*Eleusine Coracana*).		
Present return.	Next preceding return.	Corresponding return of last year.	Present return.	Next preceding return.	Corresponding return of last year.
S. Ch.	S. Ch.	S. Ch.	S. Ch.	S. Ch.	S. Ch.
...	...	...	...	...	...
...	...	...	...	...	...
...	...	...	...	...	...
...	...	...	...	...	...
...	...	...	...	...	...
...	...	16 0	...	...	...
...	...	...	...	...	...
14 0	14 0	14 8	...	...	...
...	...	...	...	...	...
...	...	...	...	...	...
...	...	...	...	...	...
...	...	...	...	...	...
...	...	...	...	...	...
...	...	...	...	...	...
...	...	...	...	...	...
...	...	...	13 0	13 0	13 0
...	...	...	...	...	...
...	...	...	...	...	...
...	...	...	...	...	...
...	...	...	...	...	...
...	...	...	...	...	...
...	...	...	...	...	...

Kangni or Kakun Italian millet (*Setaria italica*).						Gram, Chana, Chenola, Kadalay or Sunaga (*Cicer arietinum*).					
Present return.		Next preceding return.		Corresponding return of last year.		Present return.		Next preceding return.		Corresponding return of last year.	
R.	Cb	R.	Cb.	R.	Cb.	R.	Cb.	R.	Cb.	R.	Cb.
...		...		...		16	8	15	4	20	0
...		...		...		15	0	12	0	15	12
...		...		...		14	0	14	0	16	0
...		...		...		10 to 12	0 0	10 to 12	0 0	18	12
...		...		...		13	0	13	0	13	8
...		..		...		16	0	15	0	16	0
...		...		...		14	0	14	0	15	0
7	8	7	8	8	0	13	4	12	4	14	0
...		...		...		20	0	18	4	18	0
...		...		...		19	0	16	0	22	0
...		...		...		16	0	16	0	16	0
...		...				15	0	15	0	12	12
...		...		...		16	8	15	0	24	0
...		...		...		14	8	16	0	13	4
...		...		...		18	0	15	0	14	0
...		...		...		10	0	11	0	18	0
...		...		...		14	0	15	0	14	10
...		...		...		10	8	12	0	15	0
...		...		...		15	0	15	0	15	0
...		...		...		15	8	16	0	14	0
...		...		...		15	0	15	0	13	4
...		...		...		9	8	9	0	12	0
...		...				13	4	13	4	13	4

Station Bazars of the Districts of Bengal on the 31st March 1905.

INDIAN-CORN OR MAIZE (*Zea mays*).			ARHAR (*dál*) OR TUR, CAJAN PEA (*Cajanus indicus*)			SALT.			WHOLESALE PRICES PER MAUND OF 40 SEERS. SALT.			DISTRICTS.	Number.	
Present return.	Next preceding return.	Corresponding return of last year.	Present return.	Next preceding return.	Corresponding return of last year.	Present return.	Next preceding return.	Corresponding return of last year.	Present return.	Next preceding return.	Corresponding return of last year.			
S. Ch.	S. Ch.	S. Ch.	S. Ch.	S. Ch.	S. Ch.	S. Ch.	S. Ch.	S. Ch.	Rs. A. P.	Rs. A. P.	Rs. A. P.	BENGAL.		
...	...	...	11 4	12 0	12 8	15 0 A	13 8	13 8	2 3 6	2 12 0	2 12 0	Burdwan.	1	Burdwan Division.
...	...	...	8 8	9 0	13 0	12 0 B	12 0	12 0	3 0 0	3 2 0	3 3 0	Birbhum.	2	
...	..	...	13 0	13 0	12 0	16 10 C	13 0	13 0	2 6 0	2 13 0	3 0 0	Bankura.	3	
...	...	...	9 0	9 0	10 0	14 0 D	11 8	11 8	2 6 0	2 14 0	2 14 0	Midnapore.	4	
...	...	...	10 0	10 0	10 8	13 0 E	13 0	13 0	...	3 12 0	3 12 0	Hooghly.	5	
...	...	20 0	11 0	12 0	11 0	15 0 F	13 0	13 0	2 8 0	2 14 0	3 2 0	Howrah.	6	
...	...	...	11 8	11 8	11 8	13 6 G	13 5	12 5	Panga. 2 12 0	2 12 0	2 12 0	24-Parganas.	7	Presidency Division.
14 0	15 0	17 0	8 0	8 0	8 10	10 0	10 0	11 0	Panga. 2 12 0	2 12 0	2 10 0	Calcutta.	8	
...	...	...	10 12	11 4	10 0	14 0 H	13 5	13 0	2 11 0	2 13 0	3 0 0	Nadia.	9	
...	...	...	12 0	13 0	15 0	14 0 I	13 0	12 8	2 11 0	3 0 0	3 2 0	Murshidabad.	10	
...	...	...	16 0	20 0	21 0	12 0 J	12 0	12 0	3 2 0	3 2 0	3 2 0	Jessore.	11	
...	...	...	10 0	10 0	9 2	13 5 K	13 5	13 5	3 0 0	3 0 0	3 0 0	Khulna.	12	
...	...	...	13 8	13 8	12 12	15 9 L	13 12	12 13	2 9 0	3 1 3	3 1 3	Rajshahi.	13	Rajshahi Division.
...	...	...	9 9	10 0	11 0	13 4 M	13 4	13 4	Panga. 3 0 0	3 0 0	3 0 0	Dinajpur.	14	
...	...	...	10 8	11 0	9 4	12 0 N	12 0	12 0	Panga. 3 0 0	3 4 0	3 2 0	Jalpaiguri.	15	
13 0	13 0	13 0	7 0	8 0	6 8	11 0 O	10 0	10 0	3 8 0	3 14 0	4 0 0	Darjeeling.	16	
...	...	...	9 0	10 0	9 0	14 0 P	13 0	12 1½	Panga. 2 10 0	3 1 0	3 5 0	Rangpur.	17	
...	...	...	19 8	15 12	17 4	15 12	12 13	12 12	2 9 4	3 0 0	3 0 0	Bogra.	18	
...	...	...	13 0	12 0	13 0	12 0 Q	12 0	12 0	3 0 0	3 0 0	3 4 3	Pabna.	19	
...	...	...	19 0	20 0	18 0	14 0 R	14 0	12 0	2 12 0	2 12 0	3 4 0	Dacca.	20	Dacca Division.
...	...	...	10 10	10 10	10 0	12 6 S	12 6	12 12	3 3 0	3 1 0	3 2 0	Mymensingh.	21	
...	...	...	10 8	8 0	10 0	13 0 T	12 0	12 0	2 10 0	3 2 0	3 4 0	Faridpur.	22	
...	...	...	...	...	...	13 0 U	13 8	13 0	3 0 0	3 0 0	3 0 0	Backergunge.	23	

K. In the subdivisions the retail prices of salt per rupee are—Bazarhat 12 seers; Satkhira 13 seers.
L. In the subdivisions the retail prices of salt per rupee are—Nator 12 seers; Naogaon 12 seers.
M. No report from subdivision.
N. At Alipur Duars the retail price of salt is 10 seers per rupee.
O. At Kurseong and Siliguri the retail prices of salt per rupee are 8 seers and 9 seers, respectively.
P. In the subdivisions the retail prices of salt per rupee are—Gaibanda 12 seers; Kurigram 12 seers; Nilphamari 13 seers 5 chittaks.
Q. At Sirajganj the retail price of salt is 13$\frac{1}{16}$ seers per rupee.
R. In the marts in the interior of the district the retail prices of salt per rupee are—Madanganj 12½ seers; Manikganj 10½ seers; Mirkadim 12½ seers.
S. In the subdivisions the retail prices of salt per rupee are—Kishorganj 12 seers 12 chittaks; Jamalpur 12$\frac{1}{16}$ seers; Tangail 10½ seers; Netrokona 11½ seers.
T. In the subdivisions the retail prices of salt per rupee are—Goalundo 12 seers 1 chittak; Madaripur 13 seers.
U. In the subdivisions the retail prices of salt per rupee are—Pirojpur 11 seers; Patuakhali 13 seers; Bhola 12 seers.

PRICES-CURRENT (retail) of Food-grains and Salt in the Head-quarters

QUANTITIES PER RUPEE IN

Number	DISTRICTS	WHEAT. Present return.	WHEAT. Next preceding return.	WHEAT. Corresponding return of last year.	BARLEY. Present return.	BARLEY. Next preceding return.	BARLEY. Corresponding return of last year.	RICE, COMMON. Present return.	RICE, COMMON. Next preceding return.	RICE, COMMON. Corresponding return of last year.	JOWAR OR CHOLUM (*Sorghum Vulgare*). Present return.	JOWAR OR CHOLUM (*Sorghum Vulgare*). Next preceding return.	JOWAR OR CHOLUM (*Sorghum Vulgare*). Corresponding return of last year.
BENGAL—*concluded.*		S. Ch.	S. Ch.	S. Ch.	S. Ch.	S. Ch.	S. Ch.	S. Ch.	S. Ch.	S. Ch.	S. Ch.	S. Ch.	S. Ch.
Chittagong Division.	24 Tippera	...	...	...	...	...	...	13 13	13 13	14 0	...	...	..
	25 Noakhali ...	...	...		...	..	...	15 0	15 0	14 0	...	...	...
	26 Chittagong ...	...	...	...	...	...	...	13 4	13 14	13 14	...	...	...
	27 Chittagong Hill Tracts.	...	...	...	...	...	...	13 0 to 14 0	13 0 to 14 0	14 0	..	...	...
BIHAR.													
Patna Division.	28 Patna	13 0	12 8	16 0	24 0	23 0	23 0	15 0	15 0	16 0	...	...	24 0
	29 Gaya ...	14 6	13 5	17 0	20 8	20 8	24 1	13 13	13 8	12 13	...	...	22 8
	30 Shahabad ...	14 0	13 0	17 0	20 0	18 0	24 0	14 0	13 0	14 0	...	...	...
	31 Saran ...	14 0	12 0	15 0	22 0	21 0	27 0	14 0	14 8	16 0	...	...	...
	32 Champaran ...	12 0	12 0	16 0	28 0	26 0	34 0	15 0	14 8	17 0	...	...	...
	33 Muzaffarpur ...	12 0	12 0	14 0	24 0	24 0	26 0	13 0	13 0	15 0	...	...	...
	34 Darbhanga ...	13 13	12 1	15 6	28 2	22 2	30 12	15 15	15 6	16 8	...	...	...
Bhagalpur Division.	35 Monghyr ...	17 4	12 0	15 0	27 12	23 8	23 0	13 4	12 8	11 8	...	...	...
	36 Bhagalpur ...	13 0	15 4	15 12	15 0	25 8	22 12	15 4	14 6	13 14	...	...	...
	37 Purnea ...	*11 0	14 0	13 0	...	...	...	13 0	14 0	15 0	...	...	...
	38 Malda ...	13 0	...	17 0	...	...	...	13 8	14 0	15 0	...	...	...
	39 Santhal Parganas.	10 0	10 0	11 8	18 0	...	...	14 0	14 8	13 0	...	...	...
ORISSA.													
Orissa Division.	40 Cuttack ...	13 2	13 12	15 12	...	...	...	17 1	17 1	21 0	...	...	...
	41 Balasore ...	13 0	13 0	11 6	...	...	...	17 0	16 0	18 0 to 19 0	...	...	...
	42 Angul ...	8 0	8 0	8 0	...	..	...	20 0	20 0	20 0	...	...	...
	43 Puri ...	11 13	11 2	11 13	...	...	...	17 1	17 1	19 11	...	..	...
CHOTA NAGPUR.													
Chota Nagpur Division.	44 Hazaribagh ...	11 0	11 0	12 8	16 8	15 8	16 0	12 4	12 0	13 10	...	...	...
	45 Ranchi ...	7 12 to 13 0	7 12 to 12 0	8 12 to 14 0	16 0	16 0	18 0	13 4	14 0	14 0	...	...	...
	46 Palamau ...	14 10	9 0	14 1	23 10	16 14	23 10	12 6	12 7	13 5	...	..	...
	47 Manbhum ...	11 8	11 0	14 0	16 0	16 0	20 0	14 0	14 0	14 0	...	...	20 0
	48 Singhbhum ...	12 0	12 0	12 0	...	...	...	14 0	14 0	15 0	...	...	...

* The rise in prices is due to the damage done to the standing crops by rain and frost.

V. In the subdivisions the retail prices of salt per rupee are—Chandpur 10 seers 10 chittaks ; Brahmanbaria 13 seers 9 chittaks.

W. At Feni Hát the retail price of salt is 13 seers per rupee.

X. Return from Cox's Bazar not received.

Y. At Chandraghona the retail price of salt is 12 seers per rupee.

Z. In the subdivisions the retail prices of salt per rupee are—Barh 13 seers, Dinapore return not received ; Bihar 12 seers.

a. In the subdivisions the retail prices of salt per rupee are—Jahanabad 12 seers ; Nawada 13 seers ; Aurangabad 14 seers.

b In the subdivisions the retail prices of salt per rupee are—Buxar 13 seers, Bhabhua 12½ seers ; Sasaram 13 seers.

c In the subdivisions the retail prices of salt per rupee are—Siwan 13 seers 5 chittaks ; Gopalganj 13½ seers.

d. At Hettiah the retail price of salt is 12 seers per rupee.

e. In the subdivisions the retail prices of salt per rupee are—Hajipur 12 seers ; Sitamarhi 13 seers.

f. In the subdivisions the retail prices of salt per rupee are—Samastipur 13 seers ; Madhubani 13 seers 10 chittaks.

g In the subdivisions the retail prices of salt per rupee are—Begusarai 13 seers ; Jamui 13 seers.

CALCUTTA,
The 10th April 1905.

SEERS OF 80 TOLAHS.

Bajra or Cumbu (*Pennisetum typhoideum*).			Marua or Ragi (*Eleusine Coracana*).		
Present return.	Next preceding return.	Corresponding return of last year.	Present return.	Next preceding return.	Corresponding return of last year.
S. Ch.	S. Ch.	S. Ch.	S. Ch.	S. Ch.	S. Ch.
...	...	...	...	...	...
...	...	...	...	...	...
...	...	...	...	...	...
...	...	...	...	...	...
...	...	...	...	...	...
...	...	...	...	...	...
...	...	...	...	...	...
...	...	...	20 0	21 0	...
...	...	...	30 0	28 0	34 0
...	...	...	24 0	24 0	26 0
...	...	...	25 4	23 2	30 1
...	...	...	...	...	...
...	...	...	...	...	...
...	...	...	...	...	...
20 0	18 0	20 0	...	...	...
...	...	...	...	...	...
...	...	...	...	...	...
...	...	...	...	...	...
...	...	...	...	...	...
...	...	...	...	...	...
...	...	...	20 0	19 0	28 0
...	...	...	4 0	24 0	24 0
...	...	...	...	...	...
...	...	...	...	...	...
...	...	...	...	...	...

Kangni or Kakun, Italian millet (*Setaria italica*).			Gram, Chana, Chhola, Kadalay or Sunaga (*Cicer arietinum*).		
Present return.	Next preceding return.	Corresponding return of last year.	Present return.	Next preceding return.	Corresponding return of last year.
S. Ch.	S. Ch.	S. Ch.	S. Ch.	S. Ch.	S. Ch.
...	...	...	...	...	...
...	...	...	12 0	12 0	12 0
...	...	...	12 0	12 0	12 12
...	...	...	...	...	...
19 0	19 0	22 0	20 0	16 0	23 0
...	...	...	18 7	13 5	20 8
...	...	...	14 0	14 0	22 0
...	...	...	14 0	14 0	20 8
...	...	...	14 0	14 0	20 0 to 21 0
...	...	...	13 0	13 0	17 0
...	...	...	16 6	13 4	18 11
...	...	...	21 0	17 8	21 0
...	...	...	15 0	19 0	19 0
...	...	...	11 0	16 0	15 0
...	...	...	13 0	10 0	22 0
...	...	...	13 0	11 0	16 0
...	...	...	Biri or kalai. 19 1	19 1	17 11
...	...	...	Chhola. 13 0	13 0	16 0
...	...	...	Biri. 16 0	16 0	16
...	...	...	15 0	15 0	20 0
...	...	...	16 6	17 1	18 12
...	...	...	13 0	13 0	16 0
...	...	...	12 8 to 13 8	12 8 to 13 0	16 0
...	...	...	16 14	11 0	20 4
...	...	...	14 0	13 0	15 8
...	...	...	14 0	14 0	18 0

Station Bazars of the Districts of Bengal on the 31st March 1905—concld.

Indian-corn or Maize (*Zea mays*).			Arhar (*dál*) or Tur, Cadjan Pea (*Cajanus indicus*).			Salt.			Wholesale prices per maund of 40 seers. Salt.			Districts.	Number.	
Present return.	Next preceding return.	Corresponding return of last year.	Present return.	Next preceding return.	Corresponding return of last year.	Present return.	Next preceding return.	Corresponding return of last year.	Present return.	Next preceding return.	Corresponding return of last year.			
S. Ch.	S. Ch.	S. Ch.	S. Ch.	S. Ch.	S. Ch.	S. Ch.	S. Ch.	S. Ch.	Rs. A. P.	Rs. A. P.	Rs. A. P.			
												BENGAL—*concluded.*		
...	...	...	...	...	...	10 10 [V]	10 10	10 10	2 15 0	2 15 0	3 2 0	Tippera.	24	Chittagong Division.
...	..	...	...	...	...	13 0 [W]	13 0	13 0	3 0 0	3 0 0	3 2 0	Noakhali	25	
..	.	..	9 0	10 0	10 0	13 11 [X]	13 12	14 0	2 12 0	2 11 ..	2 8 0	Chittagong.	26	
...	...	...	8 8	7 0	7 0	11 0 [Y]	12 0	11 0	3 8 0	3 8 0	3 8 0	Chittagong Hill Tracts.	27	
												BIHAR.		
22 0	20 0	29 0	13 8	13 0	22 8	13 0 [Z]	13 0	13 0	3 0 0	3 0 0	3 0 0	Patna.	28	Patna Division.
20 8	20 8	23 13	12 5	13 4	12 8	12 15 [a]	12 15	11 12	3 1 9	4 1 9	3 6 7	Gaya.	29	
18 0	18 0	...	13 0	13 0	13 0	12 0 [b]	13 0	13 0	3 1 3	3 1 3	3 1 3	Shahabad.	30	
20 0	20 0	26 0	14 0	14 0	14 0	15 0 [c]	13 4	13 0	Panga. 2 9 0	3 0 0	3 1 0	Saran.	31	
22 0	20 0	20 8	15 0	14 8	17 0	12 8 [d]	12 8	12 8	3 3 0	3 3 0	3 3 0	Champaran.	32	
19 0	19 0	28 0	12 0	12 0	12 0	12 4 [e]	12 4	12 4	Panga. 3 1 3	3 3 0	3 3 0	Muzaffarpur.	33	
22 11	22 2	26 8	13 4	13 4	13 4	12 1 [f]	13 4	13 4	3 5 0	3 0 0	3 2 0	Darbhanga.	4	
24 2	18 8	20 0	11 0	10 0	10 0	14 10 [g]	12 8	12 0	2 13 9	3 2 0	3 4 0	Monghyr	35	Bhagalpur Division.
20 0	22 0	22 12	11 4	13 4	12 10	12 0 [h]	11 6	12 8	3 13 6	4 5 0	2 15 3	Bhagalpur.	36	
...	26 0	20 0	11 0	11 0	10 8	12 0 [i]	11 0	11 0	3 4 0	3 8 0	3 8 0	Purnea.	37	
30 0	26 0	...	14 0	14 0	12 0	12 0 [j]	11 0	12 0	3 5 3	4 5 3	3 4 0	Malda.	38	
18 0	16 0	20 0	16 0	17 0	20 0	12 0 [k]	12 0	11 0	3 2 0	4 2 0	3 8 0	Santhal Parganas.	39	
												ORISSA.		
...	...	...	18 8	18 8	18 8	15 0 [l]	16 0	15 0	2 8 0	4 8 0	2 8 0	Cuttack.	40	Orissa Division.
...	.	...	10 0	10 0	10 0	13 0 [m]	13 0	13 0	Panga 2 13 6	2 13 6	2 15 0	Balasore.	41	
...		...	20 0	20	26 0	10 0 [n]	10 0	10 0	Karkatch. 3 4 0	4 0 0	3 12 0	Angul.	42	
	.	...	11 2	11 13	8 13	15 0 [o]	16 8	16 0	Karkatch. 2 12 8 0	2 9 0	2 5 0	Puri	43	
												CHOTA NAGPUR.		
16 8	15 8	22 0	9 8	9 8	10 0	12 8	10 8	11 0	3 1 3	3 10 0	3 7 0	Hazaribagh.	44	Chota Nagpur Division.
17 0	18 0	25 0	6 0 to 8 8	6 0 to 8 8	9 0 to 10 0	12 0	11 0	11 8	Panga. 3 4 0	3 10 0	3 4 0	Ranchi.	45	
16 14	18 0	27 0	11 4	11 4	12 6	14 10	12 6	12 6	4 ...	...	...	Palamau.	46	
...	...	22 0	11 8	11 8	11 0	14 8	12 0	12 0	2 8 0	3 2 0	3 4 0	Manbhum.	47	
...	...	...	13 0	13 0	10 0	11 0	11 0	11 0	3 8 0	3 8 0	3 8 0	Singhbhum.	48	

† Revised figures.

h. In the subdivisions the retail prices of salt per rupee are—Banka 11½ seers; Madhipura 12 seers; Supaul 12 seers.
i. In the subdivisions the retail prices of salt per rupee are—Kishanganj 12 seers; Araria 12 seers.
j. At English Bazar the retail price of salt is 14 seers per rupee.
k. In the subdivisions the retail prices of salt per rupee are—Deoghar 13 seers; Godda 10 seers; Jamtara return not received; Pakaur 13 seers; Rajmahal 13 seers.
l. In the subdivisions the retail prices of salt per rupee are—Jajpur 13 seers; Kendrapara 13 seers.
m. At Bhadrak the retail price of salt is 12 seers per rupee.
n. In the marts in the interior of the district the retail prices of salt per rupee are—Sankhpur 10½ seers; Kusmipara 9 seers.
o. At Khurda the retail price of salt is 16 seers per rupee.
p. At Gumsur the retail price of salt is 10½ seers per rupee.
q. At Gobindpur the retail price of salt is 13 seers per rupee.

Published for general information.

R. W. CARLYLE,
Offg. Chief Secy. to the Govt. of Bengal.

PRICES-CURRENT (wholesale) of Food-grains, Firewood, &c.,

Number.	Marts.	Rice (best sort).			Common rice (*mota chául*).			Wheat (*Triticum sativum*).			Barley (*Hordeum vulgare*).		
		Present return.	Next preceding return.	Corresponding return of last year.	Present return.	Next preceding return.	Corresponding return of last year.	Present return.	Next preceding return.	Corresponding return of last year.	Present return.	Next preceding return.	Corresponding return of last year.
		Rs. a. p.	Rs. a. p.	Rs. a. p.	Rs. a. p.	Rs. a. p.	Rs. a. p.	Rs. a. p.	Rs. a. p.	Rs. a. p.	Rs. a. p.	Rs. a. p.	Rs. a. p.
1	Calcutta ...	5 12 0	5 4 0	5 8 0	4 8 0	4 4 0	4 0 0	3 8 0	3 8 0	3 4 0	2 8 0	2 8 0	2 8 0
2	Burdwan ...	3 4 0	3 4 0	4 1 6	2 12 9	2 12 9	3 0 9	...	...	...	...	...	...
3	Midnapore ...	3 0 0	3 0 0	3 0 0	2 7 0	2 7 0	2 8 0	...	...	...	...	...	...
4	Patna ...	6 10 0	6 5 0	6 10 0	3 2 9	3 2 3	2 6 6	2 10 6	2 10 0	2 3 6	...	...	...
5	Rangpur ...	4 0 0	4 1 0	3 1 9	2 10 0	2 12 0	2 7 0	3 0 0	3 0 0	3 5 2	...	...	...
6	Dacca ...	3 12 0	3 12 0	2 10 0	2 8 0	2 8 0	2 6 0	2 12 0	2 10 0	2 8 0	1 8 0	1 7 0	2 8 0
7	Chittagong ...	...	...	...	3 0 0	2 12 0	2 12 0	...	...	...	...	...	...
8	Patna ...	4 0 0	4 0 0	2 12 0	2 9 0	2 10 0	2 8 0	3 1 0	3 3 0	2 8 0	1 11 0	1 11 6	1 6 0
9	Muzaffarpur ...	5 8 0	5 0 0	5 0 0	2 13 0	2 13 0	2 8 0	3 1 3	3 1 3	2 10 6	1 9 6	1 9 6	1 8 0
10	Bhagalpur ...	3 8 0	3 8 0	3 15 0	2 8 0	2 10 0	2 14 0	3 0 0	3 2 6	2 8 6	2 9 0	2 9 0*	1 12 0
11	Cuttack ...	3 13 0	3 13 0	3 9 0	2 5 6	2 5 6	1 12 6	3 0 7	3 0 9	2 5 0	...	...	...
12	Ranchi ...	4 3 4	4 3 4	3 15 9	2 13 0	2 12 0	2 9 3	3 1 0 to 5 2 6	3 5 3 to 5 2 6	2 14 0 to 4 3 0	2 8 0	2 8 0	2 8 0

* Revised figures.

CALCUTTA,
The 8th April 1905.

	Jowar or Cholum (*Sorghum vulgare*).						Bajra or Cumbu (*Pennisetum typhoideum*).						Marua or Ragi (*Eleusine coracana*).						Gram, Chana, Chola, Kadalay, or Sunaga (*Cicer arietinum*).					
	Present return.			Next preceding return.			Present return.			Next preceding return.			Present return.			Next preceding return.			Present return.			Next preceding return.		
	Rs.	A.	P.	Rs.	A.	P.	Rs.	A.	P.	Rs.	A.	P.	Rs.	A.	P.	Rs.	A.	P.	Rs.	A.	P.	Rs.	A.	P.
	2	10	0	2	4	0	2	10	0	2	10	0							3	0	0	3	0	0
																			2	0	0	2	10	0
																			2 14 0 to 3 8 0			2 14 0 to 3 8 0		
																			2	10	6	2	10	0
																			2	10	0	2	8	0
																			2	8	0	2	7	0
																			3	8	0	3	8	0
				1	10	0													2	0	0	2	8	0
													1	9	6	1	9	6	2	13	9	2	13	0
																			2	10	0	2	12	0
																			Buri or kalai.					
																			2	1	8	2	1	8
																			2 15 6 to 3 3 0			3 1 0 to 3 3 0		

Indian-corn or Maize (*Zea mays*).			Arhar Dal or Thur—Cadjan Pea (*Cajanus indicus*).			Linseed.			Mustard and Rapeseed		
Present return.	Next preceding return.	Corresponding return of last year.	Present return.	Next preceding return.	Corresponding return of last year.	Present return.	Next preceding return.	Corresponding return of last year.	Present return.	Next preceding return.	Corresponding return of last year.
Rs. A. P.	Rs. A. P.	Rs. A. P.	Rs. A. P.	Rs. A. P.	Rs. A. P.	Rs. A. P.	Rs. A. P.	Rs. A. P.	Rs. A. P.	Rs. A. P.	Rs. A. P.
2 8 0	2 8 0	2 4 0	4 12 0	4 12 0	4 8 0	5 6 0	4 10 0	4 2 0	4 10 0	4 6 0	3 14 0
—	—	—	3 6 0	3 5 0	3 4 0	—	—	—	4 4 0	4 8 0	3 12 0
									Black mustard.		
—	—	—	3 12 0	3 12 0	3 8 0	4 0 0	3 14 0	3 6 0	4 8 0	4 8 0	3 12 0
									Rapeseed.		
									4 4 0	4 2 0	2 12 0
—	—	—	3 4 0	3 5 0	3 5 0	3 11 0	3 10 0	3 12 0	4 4 0	4 4 0	4 6 0
—	—	—	3 12 0	3 .2 0	3 12 0	—	—	—	3 14 0	3 12 0	3 7 1
—	—	—	2 0 0	1 14 0	2 14 0	—	—	—	—	—	—
—	—	—	4 8 0	4 8 0	4 0 0	—	—	—	4 8 0	4 0 0	4 2 0
2 8 0	2 0 0	1 5 0	2 15 0	3 0 0	2 12 0	4 4 0	4 0 0	3 10 0	4 4 0	4 4 0	3 0 0
2 0 0	2 0 0	1 5 3	3 1 3	3 3 0	3 3 0	—	—	—	—	—	—
									Rapeseed.		
2 0 0	1 15 6	1 11 9	3 9 0	3 3 0	3 2 6	6 10 0	6 4 0	3 5 0	3 15 0	4 8 0	3 6 0
									Mustard.		
									3 5 0	—	2 10 0
—	—	—	2 2 9	2 2 9	2 0 3	—	—	—	4 1 0	5 4 0	4 3 6
			6 2 3	6 2 3	4 0 0				4 0 0	3 8 0	2 12 0
—	—	—	to	to	to	5 9 0	5 0 0	4 0 0	to	to	to
			6 10 0	6 10 6	4 7 0				4 5 0	4 2 0	3 0 0

Til or Jinjili seed.			Sugar (raw).			Cotton (cleaned).			Jute.		
Present return.	Next preceding return.	Corresponding return of last year.	Present return.	Next preceding return.	Corresponding return of last year.	Present return.	Next preceding return.	Corresponding return of last year.	Present return.	Next preceding return.	Corresponding return of last year.
Rs. A. P.	Rs. A. P.	Rs. A. P.	Rs. A. P.	Rs. A. P.	Rs. A. P.	Rs. A. P.	Rs. A. P.	Rs. A. P.	Rs. A. P.	Rs. A. P.	Rs. A. P.
4 4 0	4 4 0	3 12 0	5 4 0	4 12 0	4 4 0	18 0 0	18 0 0	17 0 0	6 2 0	5 14 0	5 2 0
...	...	...	5 1 0	5 0 0	4 2 0	20 0 0	20 0 0	24 0 0	...	...	...
...	...	...	5 8 0	5 8 0	4 0 0 to 4 4 0	23 0 0	23 0 0	25 0 0	...	...	...
...	...	...	4 4 0	4 4 0	4 6 0	24 0 0	24 0 0	22 0 0	6 7 3	7 4 3	5 6 6
...	...	...	4 0 0	4 0 0	5 8 10	...	...	...	6 2 0	7 0 0	4 5 4
...	...	...	6 0 0	6 0 0	7 8 0	...	...	...	6 0 0	5 8 0	5 0 0
...	...	...	8 8 0	7 8 0	5 6 0	15 8 0	17 8 0	19 8 0	...	...	...
5 8 0	5 2 6	3 6 0	4 8 0	4 8 0	3 4 0	18 0 0	18 0 0	20 0 0	6 0 0	6 0 0	4 8 0
...	...	...	3 10 0	3 10 0	2 10 6	...	...	...	...	...	...
...	...	...	11 10 0	12 0 0	4 8 0	20 0 0	24 0 0	22 12 0	...	...	...
4 3 0	3 5 3	2 15 6	4 12 0	4 12 0	4 0 0	20 0 0	20 0 0	20 0 0	...	...	...
...	...	...	5 5 0	5 0 0 to 5 12 0	3 5 4 to 3 10 0	22 14 0	22 14 0	26 10	...	...	...

Ghi (clarified butter).						Tobacco Leaf.						Hides (cow).						Grass.					
Present return.			Next preceding return.			Corresponding return of last year.			Present return.			Next preceding return.			Corresponding return of last year.			Present return.			Next preceding return.			Corresponding return of last year.		
Rs.	A.	P.	Rs.	A.	P.	Rs.	A.	P.	Rs.	A.	P.	Rs.	A.	P.	Rs.	A.	P.	Rs.	A.	P.	Rs.	A.	P.	Rs.	A.	P.
														Per 100 pieces.									
41	0	0	41	0	0	39	0	0	8	0	0	8	0	0	9	0	0	450	0	0	350	0	0	250	0	0	1	4	0	1	9	0	1	2	0
35	8	0	33	0	0	32	0	0	...			...			...			...			...			...			...			...			...		
									Madhukhali									Unc eaned, per piece.																	
35	0	0	35	0	0	32	8	0	6	8	0	6	8	0	8	12	0	2	0	0 to 3	2	4	0 to 3	2	0	0 to 3	...			...			...		
									Pulta.									Cleaned, per piece.																	
									8	8	0	8	8	0	8	12	0	2	4	0 to 3	2	8	0 to 3	2	4	0 to 3									
																		3	4	0	3	8	0	3	4	0									
52	0	0	52	0	0	52	0	0	11	0	0	11	0	0	12	8	0	...			...			...			...			...			...		
38	12	0	38	12	0	32	14	2	5	2	0	5	2	0	7	1	0	...			...			...			0	3	0	0	3	0	0	3	0
																		Per maund.																	
44	0	0	44	0	0	40	0	0	7	10	0	7	8	0	7	8	0	38	0	0	38	0	0	25	0	0	0	6	0	0	6	0	0	5	0
																		Per maund.																	
36	0	0	36	0	0	36	0	0	7	0	0	7	0	0	11	12	0	15	0	0	16	0	0	16	12	0	...			...			...		
28	0	0	28	0	0	29	0	0	8	8	0	8	8	0	8	12	0	...			...			...			0	5	0	0	5	0	0	5	0
30	7	6	30	7	6	30	7	6	8	0	0	8	0	0	8	0	0	...			...			...			...			...			...		
32	0	0	32	0	0	32	0	0	...			...			5	4	0	...			...			...			...			...			...		
																		Per maund.																	
35	9	9	34	4	0	34	11	0	4	4	0	4	4	0	4	4	0	25	0	0	25	0	0	25	0	0	0	7	0	0		6	0	7	0
																		Per piece.																	
33 to 37	12	0	33 to 40	0	0	30 to 35	7	6	10 to 13	0	0	10 to 13	0	0	8 to 13	10	0	1	4	0	1	4	0	2	0	0	0	5	4	0	5	4	0	5	4

in the undermentioned Marts of Bengal on the 31st March 1905.

STRAW.			JUAR STALKS.			PRICE PER MAUND OF 40 STANDARD SEERS.									MARTS.
						IRON.			FIREWOOD.			SALT.			
Present return.	Next preceding return.	Corresponding return of last year.	Present return.	Next preceding return.	Corresponding return of last year.	Present return.	Next preceding return.	Corresponding return of last year.	Present return.	Next preceding return.	Corresponding return of last year.	Present return.	Next preceding return.	Corresponding return of last year.	
Rs. A. P.	Rs. A. P.	Rs. A. P.	Rs. A. P.	Rs. A. P.	Rs. A. P.	Rs. A. P.	Rs. A. P.	Rs. A. P.	Rs. A. P.	Rs. A. P.	Rs. A. P.	Rs. A. P.	Rs. A. P.	Rs. A. P.	
1 0 0	1 0 0	0 14 0	...	...	...	5 12 0	5 12 0	5 12 0	0 8 0	0 8 0	0 8 0	2 12 0	Panga. 2 12 0	2 10 0	1. Calcutta.
0 7 0	0 7 0	0 12 0	...	...	...	...	...	...	0 5 6	0 5 3	0 6 0	2 3 6	2 12 0	2 12 0	2. Burdwan.
0 8 0	0 8 0	0 10 0	...	...	...	2 8 0 to 4 0 0	2 8 0 to 4 0 0	3 8 0	0 4 0	0 4 0	0 4 0	2 6 0	Panga. 2 14 0	2 14 0	3. Midnapore.
1 0 0	1 0 0	1 0 0	...	...	...	7 0 0	7 0 0	7 0 0	0 6 0	0 6 0	0 6 0	3 0 0	3 0 0	3 4 3	4. Pabna.
0 12 0	0 12 0	0 12 0	...	...	...	7 4 0	7 4 0	7 4 0	0 8 0	0 8 0	0 8 0	2 10 0	Panga. 3 1 0	3 5 2	5. Rangpur.
...	...	...	...	...	...	5 8 0	5 8 0	5 0 0	0 6 0	0 6 0	0 5 0	2 12 0	Panga. 2 12 0	3 4 0	6. Dacca.
...	...	...	...	....	...	4 8 0	4 0 0	4 12 0	...	...	...	2 12 0	Panga. 2 11 0	2 8 0	7. Chittagong.
0 6 0	0 6 0	0 6 0	...	...	1 10 0	4 0 0	4 0 0	4 0 0	0 5 9	0 5 0	0 5 0	3 0 0	3 0 0	3 2 0	8. Patna.
...	...	...	...	...	...	5 11 6	5 11 6	5 11 6	0 5 3	0 5 3	0 4 0	3 1 3	3 3 0	3 3 0	9. Muzaffarpur.
...	...	...	...	...	...	5 0 0	5 0 0	5 0 0	0 5 0	0 5 6	0 5 6	3 5 0	3 3 0	2 15 3	10. Bhagalpur
0 7 0	0 7 6	0 7 0	...	...	...	3 13 0	3 6 9	4 2 6	0 4 0	0 4 6	0 4 6	2 8 0	Karkatch 2 8 0	2 8 0	11. Cuttack.
0 9 1	0 9 1	0 4 0 to 0 6 0	...	...	...	5 8 0	5 8 0	5 8. 0	0 5 0	0 5 0	0 5 0	3 4 0	Panga. 3 10 0	3 4 0	12. Ranchi.

R. W. CARLYLE,

Offg. Chief Secretary to the Govt. of Bengal.

No

Imports of Principal Articles into Calcutta by Rail,

Whence imported	Food-grains								Fibrous products		Oilseeds	
	Rice and paddy			Wheat	Wheat flour	Gram and pulse	Other food-grains	Total	Jute, raw	Gunny bags†	Linseed	Mustard seed
	Rice	Paddy*	Total (in rice)									
Bengal	Mds	Mds	Mds	Mds	Mds	Mds	Mds	Mds	Mds	No	Mds	Mds
Burdwan	291,661	186,962	478,157	2,135	325	32,510	1,370	514,497	22,572	243,905	25,125	357
Birbhum	731,999	21,196	746,347	654	611	6,065	40	752,467	11	28,710	13,600	66
Bankura	1,613	.....	1,613	.....	.....	1	.....	1,614	... .	31,455	80	.....
Midnapore	1,077,972	15,104	1,087,412	3,931	45	14,997	33	1,106,307	23,765	181,648	16,711	6
Hooghly	678,066	109,457	646,623	21,339	118	51,008	565	730,246	698,701	9,089,298	42,707	13,234
24-Parganas	2,355,836	243,467	2,570,515	933	467	12,348	4,373	2,588,536	1,142,263	10,831,912	18,131	963
Nadia	44,557	2,058	46,843	122,505	2	900,135	2,914	1,072,199	806,181	128,776	479,740	5,544
Murshidabad	208,661	497	206,171	124,541	12	234,368	19,719	764,526	166,948	20,257	121,878	9,919
Jessore	31,344	5,707	36,696	67	.....	111,977	375	149,105	747,473	23,154	66,113	1,716
Khulna	41,373	264,979	306,986	.....	.....	19,245	.....	326,230	648,644	3,535	2,723	1,084
Rajshahi	11,076	10,161	17,487	2,376	.....	20,119	60	39,542	743,189	1,435	27,431	430
Dinajpur	99,810	63,467	151,991	.....	.....	373	.....	152,569	196,569	1,060,035	.....	193
Jalpaiguri	155	... ..	155	.....	1	43	.....	199	403,642	626,305	.....	435
Darjeeling	4	.....	4	6	8,043	30,984	.....	39,084	84,161	277,760	.. ..	.....
Rangpur	4,875	935	5,460	187	.....	370	.....	6,026	1,588,709	376,375	4,515	1,348
Bogra	128,972	277,415	362,256	.....	.....	2,057	.....	364,343	368,490	80,400	2,615	129
Pabna	4,691	1,163	4,969	1,569	.....	3,063	... ..	9,599	1,763,213	63,141	15,254	7,239
Cooch Behar	15	... .	15	495	.....	.....	.....	510	163,641	1,480	.....	197
Dacca	7,325	1,619	8,327	818	.....	2,240	.....	11,404	3,180,113	104,425	14,567	488
Mymensingh	15,762	43,104	46,715	59	.....	1,276	.....	44,053	1,436,256	14,665	12,049	7,880
Faridpur	73,001	2,639	73,646	10,511	638	103,675	896	189,466	4,029,208	76,370	128,503	7,759
Backergunge	2,289,210	4,678	2,293,124	.....	.....	5,771	.....	2,257,993	27,015	26,195	15,252	674
Tippera	39,173	1,173	39,906	.....	.....	... ..	.....	39,906	406,147	11,410	5,050	273
Noakhali	33,107	.....	33,107	.....	.....	250	.....	33,457	9,344	2,520	24,019	.....
Chittagong	903	.....	903	.....	.....	36	.....	1,039	87	8,190	.....	.....
Total Bengal	8,273,351	1,310,336	9,091,465	302,254	10,021	1,554,231	34,316	10,992,461	18,823,548	36,101,329	1,045,174	53,057
Bihar												
Patna	1,452	2,061	3,744	469,712	.....	361,692	76,125	950,203	1,863	7,844	1,161,485	276,289
Gaya	1,225	... ..	1,225	84,765	20	38,137	... ..	124,068	...	23,040	413,795	76,221
Shahabad	858	259	1,114	406,392	.....	419,619	12,264	839,189	282	5,620	446,804	40,578
Saran	548	.....	548	9,504	.....	28,240	7,739	45,531	1,519	10,010	179,854	41,622
Champaran	356	1,836	1,192	21,813	.....	2,576	23,950	49,537	727	6,348	456,234	20,136
Muzaffarpur	97	... ..	97	18,644	.....	104,662	27,580	149,983	2,164	168,965	543,124	58,224
Darbhanga	4,080	.....	4,080	2,401	.....	99,667	6,788	113,936	...	1,578	803,948	53,260
Monghyr	1,384	.....	1,484	692,188	8	398,648	13,582	889,876	3,888	5,706	360,977	313,716
Bhagalpur	15,452	.....	15,452	261,467	.....	236,281	260,721	811,831	21,810	10,592	450,980	316,514
Purnea	1,923	716	2,370	9,503	.....	20,209	413	41,445	1,208,814	86,885	43,087	81,038
Malda	13,894	672	14,113	36,708	.....	20,823	2,330	76,479	88,445	1,740	49,101	1,285
Santhal Parganas	7,700	.....	7,700	280,756	.....	215,881	77,578	581,715	43,458	8,788	168,640	243,446
Total Bihar	48,856	5,196	51,996	2,093,664	28	1,926,981	508,118	4,580,646	1,469,021	356,627	4,787,229	1,451,648
Orissa												
Cuttack	220,473	57,185	227,462	25	.....	41,923	4	279,485	1,284	2,220	206	.....
Balasore	746,540	268,644	914,412	1,885	.....	39,642	.....	955,879	69,908	18,615	5,718	6
Puri	230,647	11,894	238,027	.....	... ..	1,894	.....	239,431	.. ..	1,296	.....	.....
Total Orissa	1,197,754	337,683	1,380,912	1,910	.....	83,949	4	1,474,795	51,192	22,130	6,145	6
Chota Nagpur												
Hazaribagh	.....	.....	.....	.....	.....	26	.....	26	.....	845	3,629	761
Palamau	.....	.....	.....	675	.....	41	82	798	.....	1,228	29,844	29,928
Manbhum	104	.....	104	.....	40	.....	... ..	144	4,312	12,846	672	1,450
Singhbhum	40,731	160	40,891	.....	.....	530	23	41,284	.....	2,645	12,936	267
Total Chota Nagpur	40,835	160	40,995	675	40	597	105	42,308	4,312	18,086	46,982	33,422
Total from the Provinces under the Lieutenant-Governor of Bengal	9,560,630	1,653,364	10,574,330	2,396,943	10,130	3,563,758	553,573	17,098,684	20,348,094	34,542,971	5,884,950	1,518,033
Other Provinces and Places												
Burma	45,720	5,839	46,513	.....	94	25,651	.....	71,284	.....	53,760	.....	.....
Assam	50,716	2,712	52,421	705	3	393	19	53,521	102,849	33,498	113,629	290,326
U P of Agra and Oudh	3,248	39	3,261	14,226,629	15,765	3,044,261	698,979	18,029,464	40,866	18,210	2,044,542	1,477,086
Punjab	846	.....	846	2,197	23,966	101,547	13,020	181,670	.. ..	2,678	2,698	58,089
Sind	.....	.....	.....	.....	.....	..	.....	.....	.....	...	...	...
Central Provinces and Berar	48,650	4	48,661	28,448	.....	64,295	1,284	138,618	3,210	3,260	49,677	7,708
Bombay	177	.....	177	1	.....	4	4	186	.....	880	.....	.....
Madras	43,240	3,197	46,220	.....	.....	12,748	128	56,180	13,575	60,260	721	...
Rajputana and Central India	15	.....	15	14,398	.....	9,286	6	23,704	.....	.....	49,668	17,970
Nizam's Territory	5	...	5	.....	.....	.....	.....	5	.....	.....	.....	.....
Alleppey	926	...	926	.....	.....	.....	.....	926	.....	.....	.....	...
Port Blair	.....	.....	.....	.....	.....	.....	.....	.....	16	.....	.....	...
Grand Total 1905	9,746,128	1,665,367	10,768,296	14,676,775	39,761	6,921,546	1,267,994	33,690,968	20,546,291	34,690,049	9,131,065	3,402,332
Grand Total 1904	9,685,744	1,469,845	9,788,647	8,294,989	36,573	6,499,614	897,295	25,279,547	19,551,084	17,946,694	6,672,283	3,239,654
Grand Total 1903	8,714,229	1,719,278	9,788,647	3,930,231	41,913	6,289,549	788,911	19,718,806	20,122,254	14,115,664	4,179,687	3,468,153

* One maund of paddy is equivalent to 25 seers of rice
† Including gunny cloth, 3 yards = 1 bag.

I

Road, River, Canal, and Sea (coastwise) in the ten months April 1904 to January 1905

Tea, Indian	Cotton, raw	Silk, raw	Coal and coke	Indigo	Sugar: Refined	Sugar: Unrefined	Tobacco: Unmanufactured	Tobacco: Manufactured	Whence imported
Mds	Mds	Mds	Mds	Mds	Mds	Mds	Mds	Mds	
									Bengal
	68	..	39,474,870	2	12	37	2,185	173	Burdwan
	463	801				224	1,360	16	Birbhum
	64					2	85	736	Bankura
	1,401	549	64,509	9	8	28,767	1,550	715	Midnapore
	4,027	13	48 325		2,079	75,977	61,493	10,413	Hooghly
	12,134		86,503		5,574	234,242	24,856	3,499	24-Parganas
1	4,496	13	13,200	31	168	14,926	20,440	15	Nadia
	115	6,539			84	775	309		Murshidabad
	1,873				439	82,031	10,407	18	Jessore
	1,243				360	29,606	371		Khulna
	18	1,403				3	1,806		Rajshahi
					14	141	108		Dinajpur
227,275	2						26,973	3	Jalpaiguri
141,912							1,176	1	Darjeeling
14,760	5,162			6		4	2,86,436		Rangpur
	6						350		Bogra
		3					1,554	1	Pabna
1,466	3						11,969		Cooch Behar
206	24,655	38			2				Dacca
	104						167		Mymensingh
	2,136			9		378	643		Faridpur
	195						50		Backergunge
1	1,438						76		Tippera
	618								Noakhali
2,224	87,157								Chittagong
495,467	96,232	9,059	89,661,407	60	9,714	464,903	434,363	16,572	Total Bengal
									Bihar
	672	18		95	331	17,341	17,854	6,223	Patna
3	359			3	23	11,079		9,947	Gaya
	4				188	14,187	167	73	Shahabad
	752			3,495		17,267		93	Saran
	63			11,466					Champaran
	167			7,746	489	1,962	9,317		Muzaffarpur
139	46			3,295		1,949	31,007	2	Darbhanga
	647			644	166	36	2,514	283	Monghyr
	17			290			943	19	Bhagalpur
1	117			1,711		2	108,910		Purnea
		333			84		20	290	Malda
	48	15		552		481	754	68	Sonthal Parganas
143	2,379	366		29,541	1,643	64,965	183,786	16,916	Total Bihar
									Orissa
	121					82	5	1	Cuttack
2	192						994		Balasore
									Puri
2	313					82	999	1	Total Orissa
									Chota Nagpur
20	24		2,638,930				5		Hazaribagh
			231,767						Palamau
3,163		26	38,647,503			614	39		Manbhum
							17		Singhbhum
3,183	110		42,316,199			614	61		Total Chota Nagpur
498,793	101,634	9,467	161,999,606	30,200	10,356	530,584	801,979	32,489	Total from the Provinces under the Lieutenant-Governor of Bengal
									Other Provinces and Places
4	24,220				3		104	546	Burma
1,373,874	5,108	479	37,496			18	337	6	Assam
1,281	218,643			2,541	2,206	16,980	1,383	413	U P of Agra and Oudh
2,370	77,126			64		6,257	61	24	Punjab
						3			Sind
2	77,791		3	3		27	54	21	Central Provinces and Berar
163	16,201	22			2,602		257	651	Bombay
494	27,241	2			238,218	11,220	466	1,611	Madras
	16,220								Rajputana and Central India
									Nizam's Territory
									Alleppy
				1					Port Blair
1,878,888	668,668	9,969	101,037,101	33,717	944,343	589,189	803,711	35,676	1905
1,984,709	623,9 A	10 454	89,741,345	49,667	814,530	608,134	515,013	64,406	1904 } Grand Total
1,878,888	576,694	14,023	44,788,270	33,201	188,250	257,076	486,297	36,783	1903

No II

Statement of the Routes by which the Articles enumerated in Table No I were imported into Calcutta in the ten months April 1904 to January 1905

Routes		Food-grains						Fibrous products		Oilseeds	
		Rice	Paddy	Wheat	Wheat flour	Gram and pulse	Other food-grains	Jute, raw	Gunny-bags*	Linseed	Mustard seed
		Mds	Mds	Mds	Mds	Mds	Mds.	Mds	No	Mds	Mds
By boat		4,811,895	623,890	237,051	353	902,418	21,801	3,206,617	19,051,901	479,300	76,628
„ river steamer		258,870	41,093	76,746	21	177,921	6,550	2,651,700	164,563	328,451	427,819
„ rail	E. I. Railway	1,357,883	175 926	14,463,967	90,290	3,983,385	1,066,077	2,207,313	683,410	7,751,667	2,929,219
	E. B. S. Railway	514,247	383,537	30,276	8,063	440,584	1,174	9,259,696	4,705,490	455,719	18,016
	A.-B. Railway	11,078	.....	.....	.....	38	.....	82,631	15,235	9,113	923
	B.-N Railway	1,308 231	107,560	25,469	6	110,141	1,809	6,870	98,000	67,668	7,894
	B. C. Railway	40,264	79	67	.....	27,991	.....	1,956,648	27 205	30,477	2,149
	Bombay Railway	.....	.....	.....	.....	8	.....	.....	.....	.....	.....
	D.-S. Railway†	.....	.....	.....	.....	.....	.....	.....	245		.....
„ road		1,198,075	113,636	636	273	7,035	.....	943,053	256,010	4,782	.....
„ sea		251,149	210,906	.....	24	73,180	113	69,637	108,060	3,239	.....
Total	1905	9,746,132	1 632,267	14,836,213	99,761	5,821 546	1,097,454	20,843,891	24,690,069	9,121,065	3,462,248
	1904	8,830 744	1,439,845	5,234,989	36,272	5,466,414	387,235	19,351,098	17,948,696	6,673,283	2,239,286
	1903	8,714,239	1,719,274	2,988,231	41,913	5,209,549	755,011	20,122,294	14,115,664	4,179,687	2,426,183

Routes		Tea, Indian	Cotton, raw	Silk, raw	Coal and coke	Indigo	Sugar		Tobacco	
							Refined	Unrefined	Unmanufactured	Manufactured
		Mds	Mds	Mds	Mds	Mds	Mds	Mds	Mds	Mds
By boat		.....	16,511	44	68,226	6	3,134	251,519	20,267	7,228
„ river steamer		1,091,727	26,021	3,273	89,694	.....	261	8,642	7,107	2,166
„ rail	E. I. Railway	6,542	675,349	4,026	28,997,475	21,215	3,279	82,829	26,541	11,545
	E. B. S. Railway	494,572	11,161	1,979	20,622	692	532	27,546	207,915	26
	A.-B. Railway	151,626	3,549	.....	.....	.....	.....	16	.....	.....
	B.-N. Railway	706	14,225	9	1,925,529	2	14,720	11,419	775	926
	B. C. Railway	.....	2,673	.....	.....	.....	.....	46,544	4,570	16
	Bombay Railway	.....	64,413	.....	.....	.....	.....	.....	20	.....
	D.-S. Railway†	122,617	.....	.....	.....	.....	.....	.....	.....	.....
„ road		.....	4,297	.....	57,423	.....	220	129,293	26,647	11,024
„ sea		10,443	108,220	21	.....	1	217,263	.....	1,139	2,220
Total	1905	1,876,254	928,223	9,359	102,667,101	20,717	244,546	565,189	309,711	35,276
	1904	1,524,763	622,225	15,429	89,746,225	40,227	214,130	205,234	515,013	44,426
	1903	1,575,602	676 294	14,026	48,788,270	22,221	169,220	607,476	423,227	26,756

* Including gunny cloth, 2 yards = 1 piece

† The comparative figures for 1903 in these tables do not include the trade between Calcutta and Assam carried partly by river and partly by the Dibru-Sadiya Railway which was not registered in that year

No III

Imports of certain Articles into Calcutta by Sea (Foreign and Coastwise) in the ten months April 1904 to January 1905

	Cotton piece-goods		Cotton yarn		Salt	Kerosene oil
	European	Indian	European	Indian		
	Rs	Rs	Mds	Mds	Mds	Mds
From Foreign Countries—						
United Kingdom	14,07,21,157	.....	66,833	.....	5,171,785	272
Other countries	17,96,857	.....	12,854	.....	4,462,433	2,126,802
Total ...	14,25,18,014	.....	79,687	.....	9,634,217	2,127,074
Coastwise—						
Bombay	35,614	51,11,005	55	118,576	527,944	.....
Sind	5,058	.....	.....	.....	.....	.....
Madras	26,701	73,376	.....	6	35,354	.....
Other ports in Madras	.....	4,390	.....	.....	25,400	.....
Pondichery	18,899	.....	.....	.....	.....	.....
Burma	1,20,891	18,015	5	26	.....	2,479,199
Other ports	.....	.....	.....	51	.....	.....
Total ...	2,57,163	52,06,786	60	118,659	588,698	2,479,190
Total ... 1905 ...	14,27,75,177	52,06,786	79,747	118,659	10,222,915	4,606,264
Total ... 1904 ...	11,91,15,656	43,86,261	69,388	111,489	8,970,387	3,751,212
Total ... 1903 ...	12,50,33,819	43,32,905	85,221	142,044	8,986,719	3,619,634

No IV

Exports of Principal Articles from Calcutta by Sea (Coastwise and to Foreign countries) in the ten months April 1904 to January 1905

	Rice	Paddy	Total (in rice)	Wheat	Wheat flour	Gram and pulse	Other food-grains	Total	Jute, raw	Gunny-bags*
Coastwise—	Mds	Mds	Mds	Mds	Mds	Mds	Mds	Mds	Mds	No
Bombay	441,253	.....	441,253	120	.....	160	115	441,637	7	19,076,781
Sind	1,096	.....	1,096	.....	.....	.....	.....	1,096	.....	4,909,883
Mandvi	.....	.....	.....	.....	.....	.....	.....	.....	.....	.....
Madras	115,240	.....	115,240	2,220	84,676	212,731	12,055	383,921	.....	2,279,260
Other ports in Madras ...	257,772	4,427	262,539	221	17,344	46,557	60	324,721	19	2,734,610
Pondichery ...	.....	.....	.....	28	2,460	4,208	.....	7,696	.....	533,160
Kattywar ...	.....	.....	.....	.....	.....	.....	.....	.....	.....	.....
Goa	.....	.....	.....	.....	.....	.....	.....	.....	.....	.....
Allepey	5,072	.....	5,072	.....	.....	.....	.....	5,072	34	56,250
Burma	41,604	.....	41,604	3,243	246,567	230,585	29,541	552,540	370	23,491,221
Other Indian ports	213	.....	213	476	11,264	17,273	37	29,992	16	1,039,556
Total ...	862,248	4,427	865,015	13,337	315,971	530,504	42,108	1,757,605	446	54,023,511
To Foreign countries—										
United Kingdom	553,515	6	553,519	6,831,183	37,734	1,688,419	161,145	9,291,950	4,958,660	33,780,252
Other countries	6,044,736	6,347	6,048,705	4,461,223	132,032	864,290	126,104	11,643,354	8,617,260	375,886,710
Total ...	6,597,251	6,373	6,601,224	11,292,406	169,736	2,572,709	287,249	20,934,314	13,575,619	409,666,962
Total ... 1905 ...	7,459,499	10,800	7,481,299	11,305,763	478,707	3,083,253	349,357	23,691,319	13,577,065	463,684,473
1904 ...	6,295,923	24,719	6,282,372	5,503,703	338,821	2,867,788	468,654	15,541,348	14,294,605	445,403,986
1903 ...	6,967,491	40	6,967,516	1,260,539	220,964	2,636,773	734,385	10,359,197	18,184,946	439,129,963

	Linseed	Mustard seed	Tea, Indian	Cotton, raw	Silk, raw	Coal and coke	Indigo	Sugar: Refined	Sugar: Unrefined	Tobacco: Unmanufactured	Tobacco: Manufactured
Coastwise—	Mds	Mds	Mds	Mds	Mds	Mds	Mds	Mds	Mds	Mds	Mds
Bombay	.....	.....	46,286	122	12	17,963,110	14	2,998	.....	64	246
Sind	.....	.....	542	.....	.....	6,891,577	.....	661	.....	.....	4
Mandvi	.....	.....	.....	.....	.....	.....	.....	.....	.....	108	.....
Madras	.....	606	1,004	.....	20	4,725,906	.....	.....	3,687	.....	24
Other ports in Madras ...	.....	14,579	117	.....	.....	3,234,490	.....	1,134	15	.....	1,109
Pondichery ...	.....	.....	.....	.....	.....	211,962	.....	746	.....	.....	.....
Kattywar ...	.....	.....	28	.....	.....	275,640	.....	.....	.....	.....	.....
Goa	.....	.....	.....	.....	.....	229,919	.....	.....	.....	.....	.....
Allepey ...	.....	.....	.....	.....	.....	184	.....	.....	.....	.....	28
Burma	11	83	3,612	2,815	106	7,230,433	.....	9,123	13,360	291,214	3,494
Other Indian ports	.....	.....	3	27	.....	238,765	.....	23,178	2,231	4,863	861
Total ...	11	15,187	53,792	2,975	219	41,253,999	14	38,788	19,293	296,249	5,345
To Foreign countries—											
United Kingdom	6,469,981	117,720	1,397,200	5,112	2,480	1,116	9,982	.....	.....		248
Other countries	4,514,349	796,946	618,714	273,194	5,980	13,464,139	11,781	158	574	28,784	2,368
Total ...	8,984,331	914,666	1,905,113	280,306	8,360	13,465,255	21,713	158	574	31,784	2,616
Total ... 1905 ...	8,944,272	930,253	1,958,974	283,281	8,577	55,189,254	21,727	38,946	21,437	122,010	7,956
1904 ...	7,189,884	1,027,422	1,997,326	286,446	52,906	45,436,246	19,462	44,909	18,584	106,189	7,946
1903 ...	5,388,649	1,265,697	1,756,261	315,483	13,545	40,679,779	16,978	45,889	17,528	214,296	7,691

* Including gunny-cloth, 3 yards = 1 bag

No V

Exports of certain Articles from Calcutta by Rail, Road, River, Canal, and Sea (Coastwise) in the ten months April 1904 to January 1905.

	Cotton piece-goods		Cotton yarn		Salt	Kerosene oil		Gunny-bags†
	European	Indian‡	European	Indian		From Calcutta	From Budge-Budge*	
Bengal	Rs	Rs	Mds	Mds	Mds	Mds	Mds	No
Burdwan	23,87,728	15,971	1,900	10,900	246,256	6,676	81,846	414,845
Birbhum	13,83,506	40,536	845	11,155	184,230	5,45	29,451	361,775
Bankura	5,76,461	696	.....	5,704	83,960	80	5,796	17,282
Midnapore	24,02,554	12,297	7,328	10,606	405,150	1,620	22,004	252,553
Hooghly	11,19,306	21,351	2,194	421	159 975	60,706	12,389	353,293
24-Parganas	27,05,051	2,04,702	5,498	340	381,792	108,407	24,987	375,319
Calcutta	.....	.....	.....	.....	.....	.....	744,048	.....
Nadia	21,04,389	5,043	15,822	895	246,374	10,678	114,176	465,101
Murshidabad	13,50,861	17,834	1,021	1,989	169,246	1,508	35,546	6307,495
Jessore	10,65,016	.....	6,252	71	141,122	31,900	21,017	98 055
Khulna	6,80,419	.....	1,562	.....	86,216	16,881	1,108	21,490
Rajshahi	20,12,955	3,750	2,843	375	138,934	4,770	33,612	104,007
Dinajpur	12,96,148	20,775	292	2,453	135,451	437	14,125	179,256
Jalpaiguri	11,61,533	20,433	988	2,120	102,301	1,031	41,589	45,295
Darjeeling	13,64,064	1,340	114	4,185	62,734	1,715	53,629	57,330
Rangpur	41,39,886	16,071	2,451	4,428	274,350	1,285	57,231	120,890
Bogra	24,69,449	5,313	2,098	1,123	121,245	353	32 671	3,11,025
Pabna	23,24,542	821	6,543	3,319	278,544	3,940	286,355	79,8 5
Cooch Behar	9,71,837	3,953	139	538	40,971	557	6,040	9,520
Dacca	70,88,093	6,931	27,089	849	541,422	8,732	274,986	121,425
Mymensingh	31,86,486	3 147	2,237	1,484	213,838	4,701	101,332	47,145
Faridpur	22,82,612	41,775	15,917	1,813	289,948	112,508	53 318	118,870
Backergunge	34,35,880	.....	14,422	20	348,134	70,916	55,406	240,810
Tippera	21,89,618	74	12,416	105	140,543	1,145	23,755	173 180
Noakhali	9,17,041	.. .	5,984	.... .	13,218	1,267	...	24,010
Chittagong	14,41,149	5,156	5,308	5	265	812	1,140	740,766
Total Bengal	5,32,12,677	4,49,897	144,460	65,460	4,803,068	463,044	2,083,715	5,224,938
Bihar								
Patna	23,32,540	19,867	2,154	7,720	296,254	334	88,431	1,945,690
Gaya	20,76,243	26,240	123	20,137	191,054	121	41,091	544,480
Shahabad	29,20,154	16,162	260	5,867	175,486	157	22,803	818,620
Saran	27,80,905	3,007	762	2,157	167,607	174	20,589	335,925
Champaran	26,19,525	22,091	56	3,982	142 586	589	50,303	362 985
Muzaffarpur	33 96,731	67,092	.....	3,013	229,194	351	35,912	617,785
Darbhanga	41,07,920	19,925	34	10,304	304,088	492	96 990	633 845
Monghyr	21,01,534	4,932	107	9,508	194,194	1,269	55,024	1,397,575
Bhagalpur	41,40,736	74,549	483	7,333	304,110	252	53,840	1,203,210
Purnea	29,32,929	34,283	719	9,367	218,059	1,491	57,010	178,120
Malda	13,94,682	5,360	2,047	3,894	86,602	211	2,442	108,400
Santhal Parganas	17,26,583	9,693	1,132	1 ,677	245,424	3,303	108,575	864,415
Total Bihar	3,33,54,563	3,15,929	7,996	91,583	2,532,662	8,754	699,996	9,138,970
Orissa								
Cuttack	8,09,654	48,210	27	21,538	514	230	27,204	497,000
Balasore	8,13,395	2,674	3,774	34,513	179,353	327	32,363	650,044
Puri	1,63,049	5,707	.....	182	9	110	1,548	155,310
Total Orissa	18,30,698	56,491	3,801	56 193	179,878	667	61,133	1,302,374
Chota Nagpur								
Hazaribagh	5,58 717	1,927	54	4,091	80 572	227	13 011	13,985
Palamau	5,17,376	697	28	430	54,086	396	3,963	73,240
Manbhum	19,45,612	46,824	73	10,163	263,947	2,450	42,462	89,405
Singhbhum	4,84,133	4,480	7	616	25,316	530	4,697	126,630
Total Chota Nagpur	35 08,838	49,168	162	15,180	423,902	3,383	63,373	303,060
Total Exports to the Provinces under the Lieutenant-Governor of Bengal	9,16,69,796	8,71,385	156,989	230,416	7,939,330	466,017	2,917,817	15,994,340
Other Provinces and Places								
Burma	19,76,860	31,249	5,763	26,233	54	.....	1,123	22,401 281
Assam	19,51,119	6,938	15,178	7,368	488,583	10,183	138,503	625,754
U. P. of Agra and Oudh	3,66,13,276	1,81,067	10,792	2,961	317,840	2,183	346,614	13,254,649
Panjab	66,11,462	1,84,991	5,534	272	66	167	60,638	2,130 648
Sind	12,276	.....	.....	.....	.....	.....	2 ,627	4,911 845
Central Provinces and Berar	11,38,511	39,129	71	1,126	1,782	1,044	82,405	3,697,885
Bombay	1,08,037	6,811	31	106	.....	.....	165,895	20 388 261
Madras	8,50,949	20,347	283	3,706	657	1,479	278,280	6,835,965
Rajputana and Central India	10 99,690	3,776	389	80	.....	125	21,201	614 530
Nizam's Territory	29,248	611	.....	.....	.....	.....	.....	209 536
Mysore	691	.....	.....	.....	.....	.....	.....	11,645
Alleppy	.....	130	.....	.....	.....	.....	.....	88 250
Pondichery	24,970	.....	.....	.....	.....	.....	.....	533,130
Nicobar	.....	.....	.....	.....	.....	.....	6	
Port Blair	72,765	650	.....	177	.....	.....	314	274
Grand Total 1905	14,10,13,168	18,07,988	192,880	279,121	8,748,214	481,182	4,389 864	37 329 918
Grand Total 1904	11,81,84,166	6,98,497	171,357	243,241	7,270,648	611,980	3,004 148	77,329 893
Grand Total 1903	11,44,09,570	7,44,761	179,879	246,739	7,615,230	623,894	3,485,493	72,251,046

* Represents the trade registered at the traffic-registering stations only
† Including gunny cloth, 9 yards 1 bag
‡ The value rates are fixed quarterly and the monthly valuation is made at the value rates of the preceding quarter

No VI

Statement of the Routes by which the Articles enumerated in Table No V were exported from Calcutta in the ten months April 1904 to January 1905

		Cotton piece-goods‡		Cotton yarn		Salt	Kerosene Oil		Gunny bags*
		European	Indian	European	Indian		From Calcutta	From Budge-Budge	
		Rs	Rs	Mds	Mds	Mds	Mds	Mds	No
By boat		14,80,473	54,667	5,786	25	1,453,933	282,084	40,008	594,719
„ river steamer		2,18,72,799	11,437	80,189	1,344	1,809,241	16,062	815,864	995,874
„ rail	E. I. Railway	7,19,05,551	7,09,198	14,686	121,651	3,206,766	13,987	1,577,586	26,897,980
	E. B. S. Railway	2,69,41,799	1,43,765	51,319	34,985	1,309,566	21,198	1,315,247	2,669,629
	A.-E. Railway	36,93,134	.....	15,779	639	96,247	4,251	2,551	49,635
	B.-N. Railway	53,12,513	1,18,619	70	65,949	472,988	3,239	192,461	3,478,309
	M. C. Railway	13,17,613	.....	7,698	.....	79,479	15,250	.....	82,780
	N.-W. Railway	3,94,944	1,158	1,661	13	.....	60	.....	5,747,183
	Bombay Railway	16,13,561	82,066	699	998	687	364	.....	3,287,510
	D. S. Railway†	34,899	.....	18	19	247	172	498	18,516
„ road		26,67,608	2,03,643	5,617	.....	50,287	115,348	.....	34,516
„ sea		16,99,207	42,446	9,231	83,073	83,971	.....	135,419	54,023,511
Total	1903	14,16,15,165	13,07,909	198,869	279,121	8,746,216	481,198	4,389,564	87,[illegible]
	1904	11,51,34,169	6,98,497	171,287	262,941	7,260,461	411,240	3,054,144	77,739,[illegible]
	1905	11,44,05,679	7,44,781	179,879	246,739	7,615,330	423,594	3,469,495	72,281,6[illegible]

* Including gunny-cloth, 3 yards = 1 bag
† The comparative figures for 1903 in these tables do not include the trade between Calcutta and Assam carried partly by river and partly by the Dibru-Sadiya Railway which was not registered in that year
‡ The value rates are fixed quarterly and the monthly valuation is made at the rates of the preceding quarter

April 11, 1905.

J. A. Robertson,
Director-General of Statistics

H. W. C. Carnduff,
Offg. Secretary to the Government of Bengal

GOVERNMENT OF BENGAL, IRRIGATION DEPARTMENT.

Approximate Return of Traffic on the Circular and Eastern Canals for the week ending Saturday, the 8th April 1905, as compared with the corresponding week of the previous year.

Nature of Cargo.	Week ending Saturday, the 8th April 1905.			Week ending Saturday, the 9th April 1904.		
	Number of boats.	Weight of cargo.	Tolls.	Number of boats.	Weight of cargo.	Tolls.
		Mds.	Rs.		Mds.	Rs.
Rice and paddy	965	2,16,736	3,691	823	91,089	1,362
Jute	5	3,276*	66	16	5,606†	82
Firewood	37	32,475	636	37	22,486	334
Other articles	980	3,07,750	3,691	587	1,45,390	1,560
Total	1,990	6,55,236	7,984	1,163	2,64,772	3,338

* Weight by canal measurement, 3,[illegible] maunds.
† Ditto ditto, 5,[illegible] „

IRRIGATION DEPARTMENT, BENGAL.

Abstract Statement showing Tollage on Canals in Bengal classed as Major Works for the month of February 1905, as compared with that of the corresponding month of the previous year.

Canals.	Tollage, 1904-05.		Tollage, 1903-04.	
	During the month.	To end of the month.	During the month.	To end of the month.
Orissa Canals.	Rs. A. P.	Rs. A. P.	Rs. A. P.	Rs. A. P.
Taldanda Canal System	2,173 5 0	14,411 3 9	1,733 4 9	11,766 5 8
Kendrapara ditto	3,918 10 6	28,546 6 4	4,367 0 8	34,407 15 8
High Level, Range I	3,959 14 9	14,248 4 0	2,230 15 9	9,242 1 3
Ditto „ II	355 0 6	1,509 6 0	313 14 9	1,302 10 7
Ditto „ III	124 6 9	484 10 6	71 10 3	268 6 0
Jajpur Canal	98 0 6	489 0 0	58 5 0	480 14 4
Total Orissa Canals ...	10,629 6 0	59,688 14 7	8,775 3 2	57,468 5 6
Midnapore Canal ...	6,962 7 9	50,165 4 3	4,529 5 9	41,822 1 3
Hijili Tidal Canal ...	2,160 2 0	37,790 14 0	4,370 6 6	35,557 12 0
Sone Canals.				
Patna Canal System ...	1,168 15 0	11,350 14 11	929 11 3	10,819 3 6
Arrah ditto ...	517 0 9	5,939 10 9	704 11 9	6,120 9 3
Buxar ditto ..	500 11 3	4,244 14 0	324 12 6	2,682 2 6
Total Sone Canals ...	2,186 11 0	21,535 7 8	1,959 3 6	19,621 15 3
Grand Total ...	21,938 10 9	1,69,180 8 6	19,634 2 11	1,54,470 2 0

Calcutta,
The 10th April 1905.

W. A. Inglis,
Secy. to the Govt. of Bengal.

IRRIGATION DEPARTMENT, BENGAL.

Abstract Statement showing Tollage on Canals in Bengal classed as Minor Works and Navigation for the month of February 1905, as compared with that of the corresponding month of the previous year.

Canals.	Tollage, 1904-05.		Tollage, 1903-04.	
	During the month.	To end of the month.	During the month.	To end of the month.
	Rs. A. P.	Rs. A. P.	Rs. A. P.	Rs. A. P.
Calcutta and Eastern Canals ...	41,770 11 6	3,27,092 3 6	38,761 3 9	2,61,173 2 10
Tolly's Nala ..	10,532 15 0	85,927 9 3	6,761 8 0	47,892 12 9
Madaripur Bhil Route	Traffic stopped.	45,972 11 9	Traffic stopped.	29,792 4 1
Total ...	52,303 10 6	4,58,992 8 6	45,522 11 9	3,38,858 3 8
Orissa Coast Canal ...	2,664 15 6	24,502 14 3	3,109 3 6	26,403 3 9
Nadia Rivers ...	4,134 13 6	84,696 7 10	4,229 5 3	83,857 9 11
Grand Total. ...	59,103 7 6	5,68,191 14 7	52,861 3 6	4,49,119 1 4

Calcutta.
The 10th April 1905.

W. A. Inglis,
Secy. to the Govt. of Bengal.

Abstract of the Results of Meteorological Observations taken at the Alipore Observatory in the month of March 1905.

	Inches.	Date.	Hour.
The mean pressure of the month	29·876		
The average pressure of March from 44 years' registers ...	29·853		
The highest pressure in the month	30·190	4th	10
The lowest pressure in the month	29·641	21st	16
The range of pressure	0·549		
	Hours.		
The total number of hours of bright sunshine during the month	203·5		
The maximum possible number of hours of sunshine ...	371·3		
	°		
The mean temperature of the month	75·1		
The average temperature of March from 19 years' registers ...	79 2		
The highest temperature in the month	94·7	30th	
The lowest temperature in the month	61·4	21st	
The range of temperature during the month	33·3		
The mean daily range of temperature	18 7		
The greatest range of temperature in one day	27·0	24th	
	Per cent.		
The mean humidity of the month	76		
The average humidity of March from 19 years' registers ...	66		
	Inches.		
The mean vapour tension of the month	0·657		
The average vapour tension of March from 19 years' registers	0·634		
The mean cloud proportion of the month	5·27		
The average cloud proportion of March from 28 years' registers	2·32		
	Inches.		
The total rainfall of the month	3·48		
The total rainfall indicated by a Beckley's self-registering rain-gauge (mouth of the gauge about 52 feet above the ground)	?		
The average fall of March from 23 years' registers ...	1·14		
The greatest fall in 24 hours	1·07	2nd	
	Days.		
The number of rainy days in the month	9		
The average number of rainy days in March from 28 years' registers	2		
The mean maximum equilibrium temperature of solar radiation during the month	° 139 7		
The mean difference of sun and air temperatures	53·5		
The greatest sun temperature	148·8	27th	
The greatest excess of sun over air temperature	63·8	2nd	
The mean temperature of the nocturnal radiation thermometer on woollen cloth	64·6		
The mean depression of the nocturnal radiation thermometer below the minimum air temperature at 4 feet above the ground	2·9		
The greatest depression of the nocturnal radiation thermometer below the minimum air temperature	4·9	3rd	
	Miles.		
The mean movement of the wind per day	118·5		
The greatest movement of the wind in one day	233·0	18th	
The greatest movement of the wind in one hour	17·0	21st 6 to 7 P.M.	

The number of hours with winds from each of the eight points—

N. 67, N.E. 50, E. 80, S.E. 55, S. 129, S.W. 193, W. 63, N.W. 61, Calm. 46.

G. W. KÜCHLER,

for *Meteorological Reporter to the Govt. of India and Director-General of Indian Observatories.*

METEOROLOGICAL OFFICE, GOVT. OF INDIA,
Alipore (Calcutta), the 10th April 1905.

Results of the Meteorological Observations taken at the Alipore Observatory from 2nd to 8th April 1905.

Month.	Date.	Maximum in sun	Number of hours of bright sunshine.	Mean pressure barometer at 32° Fahr	Temperature				Hygrometry.				Wind.		Rain.	Weather.
					Mean	Maximum.	Range.	Minimum	Mean wet bulb.	Vapour tension.	Dew point.	Humidity.	Prevailing direction.	Miles recorded.		
1905.				Inches	°	°	°	°	°	Inch.	°	%			Inches.	
April	2nd	139·6	7·2	29·881	72·7	85·9	25 0	60·9	58·6	0·308	45·7	42	NNW and WNW	80	Nil	Clear, hazy.
,,	3rd	139·9	8·1	·886	74·2	88·6	27·4	61·2	64·9	·501	59·0	60	SW, S by W and calm.	70	,,	Clear, hazy.
,,	4th	143·5	8·2	·889	78·0	88·4	19·4	69·0	72 4	·735	70 0	75	S by W and SSW	111	,,	Partially cloudy, ≏
,,	5th	145·2	8·0	·907	80·9	91·4	19·6	71·8	74·3	·783	71·9	77	WSW, SSW and calm.	88	,,	Partially cloudy.
,,	6th	146·3	8·6	·930	81·3	93·1	18·2	74·9	74·9	·777	71 6	73	WSW and SSW	95	,,	Partially cloudy.
,,	7th	144·7	6·7	·931	80·6	88·9	14·9	74 0	75 6	·829	73·6	79	SSW and S ...	132	,,	Partially cloudy.
,,	8th	142·7	7·3	·836	78·7	88 9	19·1	69·8	74·2	·797	72 4	77	SSW, S and variable.	218	0·02	Partially cloudy, d, t, <, /.

The mean pressure of the seven days	Inches.	29·894
The average pressure of the corresponding period for 24 years, Surveyor-General's Office		29 780
	Hours.	
The total number of hours of bright sunshine		54·1
The maximum possible number of hours of sunshine		86 9
The mean temperature of the seven days	°	78·4
The average temperature of the corresponding period for 24 years, Surveyor-General's Office		84·4
The extreme variation of temperature		32·2
The maximum temperature		93·1
The highest velocity of the wind in one hour	Miles.	15
The mean relative humidity	%	69
The average relative humidity of the corresponding period for 24 years, Surveyor-General's Office		67
	Inches.	
The total fall of rain from 2nd to 8th April 1905		0·02
The average fall of the corresponding period for 24 years, Surveyor-General's Office		0·40
The total fall from 1st January to 8th April 1905		6·06
The average fall of the corresponding period for 24 years, Surveyor-General's Office		3·20

The mean pressure, temperature, etc., are deduced from eye observations.

The maximum and minimum temperatures are obtained from self-registering thermometers. All the thermometers are verified and the readings have been corrected to a standard constructed and verified at the Kew Observatory. They are exposed under a thatched shed open at the sides, and are suspended four feet above the ground.

The barometer readings are corrected to those of the standard, Newman's No. 86, formerly at the Surveyor-General's Office.

The hygrometric elements are obtained from Tables III, IV and V of the official tables computed in the Meteorological Office, and based on Regnault's modifications of August's formula.

The directions and the movement of the wind are taken from the trace of a Beckley's anemograph.

The mouth of the rain-gauge is one foot above the ground. Rainfall reported on any day is for 24 hours preceding 8 A.M. of that day.

≏, dew; d, drizzling rain; t, thunder; <, lightning; /, strong wind.

METEOROLOGICAL OFFICE, GOVT. OF INDIA,
Alipore (Calcutta), the 10th April 1905.

G. W. KUCHLER,
for *Meteorological Reporter to the Govt. of India and Director-General of Indian Observatories.*

EAST INDIAN RAILWAY.

Statement of Goods Traffic in staples carried during the five weeks ending 31st December 1904 as compared with the same period of 1903.

Staples.	1903.		1904.		Increase.		Decrease.	
	Weight.	Freight	Weight.	Freight.	Weight.	Freight	Weight.	Freight.
	Mds.	Rs.	Mds.	Rs.	Mds.	Rs	Mds.	Rs.
Apparel, including drapery, haberdashery, millinery, uniforms, accoutrements, boots and shoes	6,894	6,131	8,661	9,676	767	3,545	.....	.....
Coal and coke carried for the public and foreign railways	1,87,45,968	19,67,068	1,90,13,789	20,13,749	2,67,831	46,677	.....	.....
Cotton—								
(1) Raw	2,49,561	1,52,635	4,09,092	1,91,808	1,59,431	38,173	.....	.....
(2) Manufactured—								
(a) Twist and Yarn, European	1,981	2,225	2,596	2,640	675	415	.....	.....
(b) Ditto, Indian	52,137	17,975	58,874	19,813	6,737	1,838	.....	.....
(c) Piece-goods, European	1,49,894	1,61,503	1,13,043	1,42,916	...	1,414	2,,951	.....
(d) Ditto, Indian	10,813	4,,41	28,,01	8,797	17,688	3,,16	.....	.....
(e) Others	4,375	4,160	5,145	5 610	770	1,450	.....	.....
Chemicals, excepting saltpetre	4,03.	4,702	10,616	6,931	5,965	2,189	.....	.....
Drugs—								
1.—Intoxicating, other than opium	1,987	779	275	185	.....	.....	1,712	594
2.—Non-intoxicating	9,489	6,1.0	8,058	5,647	.....	.....	1,570	513
Dyes and Tans—								
1.—Al (Morinda citrifolia)	.....	.....	496	91	496	91	.....	.....
2.—Alizarine and aniline dyes	1,122	644	573	175	.....	.....	549	273
3.—Catch	3,876	1,644	9,739	5,412	5,163	3,768	.....	.....
4.—Indigo	41,495	26,101	26,597	19,975	.....	.....	15,,96	15,126
5.—Myrabolams	5,734	968	20,991	5,1.8	15,259	2,234	.....	.....
6.—Tanning barks	5,701	649	15,,36	991	9,635	.....	.....	348
7.—Turmeric	7,685	5,636	13,,34	9,387	5,919	3,,98	.....	.....
8.—Others	9,048	3,405	8,146	2,763	.....	.....	947	685
Fodder—								
1.—Oilcake	66,219	13,613	60,981	11,326	.....	.....	5,,38	1,,87
2.—Hay, straw and grass	20,,43	2,,67	31,,33	3,736	10,291	1,,06	.....	.....
Fruits and vegetables, fresh	32,,91	23,,48	21,,00	8,145	.....	.....	10,,93	15,,28
Grain and Pulse—								
1.—Wheat	11,,6,229	2,,4,,53	20,,8,,96	4,,9,447	8,,9,,68	1,,4,,44	.....	.....
2.—Wheat flour	1,,1,,08	17,441	57,681	31,,81	.....	13,,20	66,497	.....
3.—Rice in the husk	1,,,,,0	4,344	30,,85	7,,4	.....	.....	5,,,45	2,,40
4.—Rice not in the husk	6,,6,,96	74,,29	6,,5,,68	83,,55	.....	9,,27	11,,53	.....
5.—Jowar and bajra	42,,30	3,,5.	71,,45	7,,86	29,,27	3,,76	...	.....
6.—Gram and pulse	3,,5,,58	2,,6,,27	6,,4,,05	1,,3,,64	.....	.....	1,,,,,09	32,,91
7.—Others	1,,,,,09	25,,79	5,,0,,48	94,,69	3,,6,,53	69,,91	.....	.....
Hides and Skins—								
1.—Hides of cattle	51,,98	42,,15	90,,91	54,,29	8,,69	11,,44	...	.....
2.—Skins of sheep, &c.	33,,91	16,,45	50,,29	28,,01	17,,39	10,,36	.....	.....
Horns	1,,43	3,,2	1,,27	811	834	189	.....	.....
Hemp (Indian) and other fibres (excluding jute)	1,13,,60	36,,06	1,,3,,48	40,,28	9,,43	3,,34	.....	.....
Jute—								
1.—Raw	6,,3,,25	88,,80	7,,8,,36	1,,0,,24	81,,31	83,,44	.....	...
2.—Gunny-bags and cloth	1,,8,,28	6,,,24	1,,6,,67	9,,,15	44,,39	24,,1,1	.....	...
Lac	65,,81	29,,04	1,,5,,89	53,,71	49,,87	13,,67	.....	.....
Leather—								
1.—Unwrought	3,,86	5,,94	2,,94	5,,25	.....	534	394	.....
2.—Wrought, excepting boots and shoes	721	8,,6	1,,58	640	259	14	.....	.....
Liquors—								
1.—Ale and Beer	24,,82	7,,76	20,,06	10,,79	.....	3,,96	4,,86	...
2.—Spirits and wines of all kinds, including country spirit	6,,04	7,,70	6,,78	10,,94	.....	3,,36	26	.....
3.—All other sorts, including toddy and fermented liquor, other than ale and beer	345	73	2,,34	1,,10	2,,89	1,,37	.....	.....
Metals—								
1.—Brass, unwrought	5,,08	3,,63	7,,80	3,,94	1,,17	641	.....	.....
2.—Do., wrought	16,,85	6,,56	9,,11	3,,46	.....	.....	7,,04	2,,90
3.—Copper, unwrought	1,,89	7,,1	881	337	.....	.....	678	3,,4
4.—Do., wrought	9,,19	11,,19	896	867	... ..	.....	8,,67	11,,02
5.—Iron and steel—								
(a) Cast	23,,71	11,,89	51,,22	18,,63	28,,51	6,,84	.....	.....
(b) Unwrought	68,,34	5,,46	1,,6,,91	4,,87	28,,84	213	.....	.....
(c) Wrought	76,,51	49,,33	1,,4,,74	60,,76	77,,23	29,,55	.....	.....
(d) Manufactures of iron and steel	6,,,,,6	23,,,,,0	44,,76	19,,19	3,,49	.....	... ..	3,,41
6.—Zinc and spelter	5,,13	3,,68	3 ,75	11	.....	.....	3,,40	4,,61
7.—Others	6,,05	5,,40	17,,43	9,,31	10,,77	3,,57	.....	.....
Oils—								
1.—Kerosene	1,75,,32	67,,04	3,,9,,80	1,,8,,17	2,,1,,47	60,,33	.....	...
2.—Castor	7,,,,,	3,,28	9,,,5	3,,,4	1,,96	.....	...	224
3.—Cocoanut	9,,94	3,,06	5,,94	1,,85	...	.....	4,,,9	1,,61
4.—Mustard and rape	12,,36	3,,36	15,,15	4,,41	2,,81	1,,75	.....	.....
5.—Others	3,,01	2,,48	7,,49	4,,11	4,,79	2,,49	.....	.....
Oilseeds—								
1.—Castor	78,,41	21 ,,3	1,,1,,00	25,,54	46,,59	4,,71	.....	.....
2.—Earthnuts	3,,7,,75	1,,8,,,6	9,,1,,,5	2,,6,,58	5,,3,,80	84,,17	.....	.....
3.—Linseed	78,,44	80,,71	57,,86	16,,71	.....	.....	16,,89	35,,10
4.—Poppy	3,,7,,91	1,,0,,17	3,,1,,,5	1,,7,,39	.....	7,,53	28,,,6	.....
5.—Rape and mustard	2,,4,,47	87,,7	53,,66	10 ,,1	... ..	.....	1,,,,,81	67,,98
6.—Til or jinjli	1,1 ,,40	18,,08	2,,3,,51	15,,87	36,,49	3,,18	.....	.....
7.—Others	74,,74	72,,,6	73,,18	61,,,1	615	.....	.....	5,,16
Opium	31,,54	17,,84	26,,84	13,,49	.....	... ..	3,,16	4,,,5
Paper and pasteboard	20,,95	11,,17	14,,18	14,,28	.....	3,,01	6,,15	.....
Provisions—								
1.—Dried fruits and nuts	52,,45	40,,78	67 ,,5	53,,67	14,,67	3,,84	.....	.....
2.—Ghee	2,,8,,61	1,,1,,64	2,,3,,72	1,,4,,19	44,,11	3,,,8	.....	.....
3.—Potatoes	61,,,8	39,,,8	65,,87	47,,87	3,,15	7,,60	... ..	... ..
4.—Others	.....	.....	.....	.....	.....	.....	.....	.....
Railway plant & rolling-stock carried for the public & foreign railways—								
1.—Locomotives, engines and tenders and parts thereof	.....	.....	666	555	666	555	.....	.....
2.—Carriages and trucks and parts thereof	14,,,9	3,,58	2,,6,,78	12,,,8	2,,6,,59	2,,23	.....	.....
3.—Materials—								
(a) Steel rails and fish-plates	84,,67	21,,99	87,,69	20,,13	3,,,2	.....	.....	1,,47
(b) Sleepers and keys of steel and metal	27,,73	1,,14	4,,5,,71	1,,,,79	3,,,4,,98	56,,91	.....	.....
(c) Other sorts	1,,,,,,1	1,,,,,8	6,,,,,8	25 ,,1	.....	.....	1,,,,,48	14,,,8
Salt	7,,2,,,,,	1,,,,,,,	7,,,,,,,	1,,9,,,,	87,,,,,	15,,76	.....	.....

Staples	1903.		1904.		Increase.		Decrease.	
	Weight.	Freight.	Weight	Freight.	Weight.	Freight.	Weight.	Freight.
	Mds.	Rs.	Mds.	Rs.	Mds.	Rs.	Mds.	Rs.
Saltpetre and other saline substances—								
1.—Saltpetre	70,638	38,171	51,188	28,544	.....	.....	19,450	9,627
2.—Other saline substances	74,5 0	18 793	30,040	9,689	.....	.....	44,489	9,104
Silk—								
1.—*Raw*—								
(a) Foreign	.....	.....	..	..	.....	.....	.....	.....
(b) Indian	3,547	1,185	4,130	1,625	903	440	.....	.....
2. *Piece-goods*—								
(a) Foreign	.....	.....	.....	.....	.....	.....	.....	.....
(b) Indian	1,413	1,351	461	700	.....	.....	952	651
Spices—								
1.—Betelnuts	30,897	27,967	26,924	23,414	.....	.....	3,983	4,573
2.—Cardamoms	1,257	834	936	1,026	.....	192	401	.....
3.—Chillies	24,657	9,929	21,196	9,295	.....	.....	3,461	634
4.—Ginger	4,365	1,237	7,130	2,047	2,765	810	.....	.....
5.—Pepper	3,258	2,889	3,495	3,516	157	627	.....	.....
6.—Others	26,006	16,836	26,119	20,063	113	3,225	.....	.....
Stone and lime	8,83,084	72,050	10,37,027	1,43,700	4,53,943	71,650	.....	.....
Sugar—								
1.—Refined	88,206	35,975	74,140	48,048	..	12,073	14,066	.....
2.—Unrefined—								
(a) Sugar	53,047	11,448	1,58,279	44,941	1,05,232	33,473	.....	.....
(b) *Gur*, rab, jaggree, molasses and other saccharine produce	5,24,629	1,18,421	5,33,474	1,02,702	8,845	.....	.....	.....
Tea—								
1.—Foreign	.....	.....	..	..	.....	.....	.....	.....
2.—Indian	6,336	2,935	20,635	7,766	14,299	4,831	.....	.....
Tobacco	72,858	43,950	67,279	36,241	.....	.....	5,579	6,719
Wood—								
1.—Timber, unwrought	57,633	14,651	1,38,466	24,589	80,834	9,918	.....	.....
2.—Manufactures	19,937	6,815	26,263	6,855	7,706	40	.....	.....
Wool—								
1.—Raw	4,181	3,370	4,011	2,129	.....	.....	169	1,241
2.—Manufactured—								
(a) Carpets and rugs	2-2	1,934	1,831	1,989	839		.....	.....
(b) Piece-goods, European	894	722	4,456	6,279	3,573	5,557	.....	.....
(c) Ditto, Indian	1,226	1,006	1,848	2,149	606	1,145	.....	.....
(d) Other sorts of manufactures	2,843	2,376	3,490	4,249	647	1,871	.....	.....
All other articles of merchandise—								
1.—Bones	1,89,716	31,690	1,09,126	17,339	.....	.....	84,590	13,751
2.—Firewood	46,709	7,044	87,845	7,420	.....	376	8,864	.....
3.—Indigo seed	18,339	3,716	11,800	1,668	.....	.....	6,539	2,048
4.—Paints and colours	3,906	2,379	6,982	6,986	3,087	4,566	.....	.....
5.—Seeds other than oilseeds	14,963	3,413	22,337	4,930	7,374	1,517	.....	.....
6.—Others	77,336	30,980	1,17,212	1,27,551	39,856	.....	96,571	.....
Total	2,58,84,503	49,13,186	2,53,53,760	57,27,577	34,99,193	8,14,481	.....	.....
Military stores	20,223	20,889	44,273	54,129	14,045	34,240	.....	.....
Coal for railway	11,76,369	81,186	13,20,040	87,677	53,671	6,519	.....	.....
Railway materials	16,89,722	61,512	29,67,602	86,337	10,77,979	24,825	.....	.....
Live-stock	.....	14,403	.....	53,101	.....	38,699	.....	.....
Total	2,89,30,817	51,00,117	3,26,25,748	60,02,821	46,44,978	9,06,704	.....	.....

ILLEGIBLE,

for *Chief Auditor.*

TRAFFIC AUDIT OFFICE, GOODS DIVISION, CALCUTTA, *the 5th April 1905.*

Weekly Return of Traffic Receipts on Indian Railways.

EAST INDIAN RAILWAY.

Approximate Return of Traffic for week ended 18th March 1905 on 1,962·25 miles open.

	Coaching Traffic.		Merchandise and Mineral Traffic.		Other earnings (estimated).	Total earnings.	Traffic Train-miles run.		
	No. of passengers.	Coaching Receipts.	Weight carried.	Receipts.			Coaching.	Merchandise.	Total.
		Rs. A. P.	Mds. A.	Rs. A. P. (a)	Rs. A. P.	Rs. A. P.			
Total traffic for the week	418,803	4,08,701 0 6	65,45,131 9	11,22,927 0 0	32,340 0 0	15,63,868 0 6	113,094	179,378	292,472
Or per mile of railway	.....	208 4 6	.....	572 3 5	16 7 9	796 15 8	.....	.....	.....
For previous 10 weeks of half-year	4,176,334*	*41,69,749 0 0	6,43,42,591 0†	1,09,19,348 0 0†	3,24,357 0 0‡	1,54,04,448 0 0	1,100,0305§	1,818,371§	2,964,401
Total for 11 weeks ...	4,590,136	45,69,450 0 0	7,08,87,723 8	1,20,42,169 0 0	3,56,697 0 0	1,69,68,316 0 0	1,279,124	1,997,749	3,276,873
COMPARISON.									
Total for corresponding week of previous year.	418,953	4,37,150 14 9	58,33,189 30	10,01,096 9 6	28,854 10 2	14,74,091 2 5	116,089	188,686	305,675
Per mile of railway corresponding week of previous year.	.....	225 15 8	.....	521 1 9	14 14 8	762 0 1	.....	.....	.....
Total for corresponding 11½ weeks of previous year.	4,765,073	47,53,160 0 4	7,13,24,039 30	1,14,22,351 7 6	3,32,467 0 3	1,65,37,979 1 1	1,286,467	2,101,028	3,387,495

(a) The increase is chiefly in coal.
* Added No. of passengers 1,033 and deducted Rs. 11,764 } On account of difference between the approximate and audited figures for the week ended
† Do. Mds. 1,51,421 and " 30,375 } 4th February 1905.
‡ Deducted " 301 }
§ Audited figures up to 4th February 1905.

1905. *Abstract of progressive weekly returns of all earnings for 1905 in comparison with 1904.*

Open mileage.	Period.	Coaching Traffic.		Merchandise and Mineral Traffic.		Other earnings.	Total.	Per mile of Railway.	Train mileage.	
		No. of passengers.	Rs.	Mds.	Rs.	Rs.	Rs.	Rs.	No.	Rate. Rs. A. P.
*1,962·25	Week ended 7th Jan. ...	373,540	3,94,890	66,67,736	11,43,243	30,547	15,64,495	800	297,842	5 4 1
*1,962·25	" " 14th " ...	396,519	4,09,134	61,44,640	11,54,831	29,374	15,83,859	823	307,895	5 2 5
*1,962·25	" " 21st " ...	384,101	4,37,833	69,60,443	11,86,536	34,487	16,58,216	853	309,197	5 5 4
*1,962·25	" " 28th " ...	387,648	3,76,383	71,01,869	11,58,573	34,347	15,67,152	811	312,017	5 3 0
*1,962·25	" " 4th Feb. ...	397,651	3,99,662	64,99,831	10,85,994	32,629	15,18,285	784	296,579	5 1 9
1,934·40	" " 11th " ...	411,937	4,44,451	55,04,792	9,68,247	33,411	14,54,109	741	288,679	5 15 6
1,934·40	" " 18th " ...	444,634	4,21,230	67,34,140	11,03,305	33,088	16,58,297	865	293,980	5 6 9
1,934·40	" " 25th " ...	449,921	4,00,201	63,31,314	10,99,917	34,756	15,32,573	773	296,042	5 0 9
1,934·40	" " 4th Mar. ...	485,971	4,48,316	63,86,912	10,32,957	31,437	15,20,710	790	293,814	5 2 10
1,962·25	" " 11th " ...	476,327	4,47,291	58,03,938	10,34,645	31,838	15,13,794	774	296,507	5 1 9
1,962·25	" " 18th " ...	419,903	4,08,701	65,45,131	11,22,927	32,340	15,63,968	797	292,472	5 5 7
	Totals up to date ...	4,590,136	45,69,450	7,08,87,723	1,20,42,169	3,56,697	1,69,68,316	788	3,276,873	5 2 10

Abstract of progressive weekly returns of all earnings for 1905 in comparison with 1904—concluded. 1904.

		No. of passengers.	Rs.	Mds.	Rs.	Rs.	Rs.	Rs.	No.	Rate. Rs. A. P.
1,934·40	First 9 days of Jan. ...	441,139	4,58,416	79,11,719	13,06,311	38,684	17,91,411	926	278,923	6 11 6
1,934·40	Week ended 14th " ...	453,468	3,99,516	61,92,245	9,80,650	31,739	14,30,655	740	291,620	6 14 6
1,934·40	" " 21st " ...	423,145	4,49,859	55,24,828	9,72,799	29,059	14,42,738	746	293,713	6 14 10
1,934·40	" " 28th " ...	409,909	4,21,040	54,19,224	10,03,809	28,370	14,53,781	750	289,068	6 13 6
1,934·40	" " 4th Feb. ...	426,192	4,33,992	60,63,167	10,94,743	23,529	15,48,213	800	282,477	5 1 1
1,934·40	" " 11th " ...	426,570	4,15,119	63,33,990	10,66,101	30,497	14,51,737	750	286,303	5 14 3
1,934·40	" " 18th " ...	450,236	4,55,971	61,97,345	10,54,120	31,523	15,30,714	791	304,105	5 0 6
1,934·40	" " 25th " ...	467,537	4,60,732	66,42,954	10,34,060	30,036	15,14,829	783	303,035	4 15 5
1,934·40	" " 4th Mar. ...	441,843	3,99,924	66,03,573	9,72,971	29,215	14,02,033	725	300,732	4 8 5
1,934·40	" " 11th " ...	448,468	4,37,634	66,37,453	10,12,118	29,051	15,00,833	776	298,302	5 0 6
1,934·40	" " 18th " ...	413,903	4,37,151	58,32,191	10,08,080	28,855	14,74,093	762	305,675	4 13 2
	Totals up to date ...	4,590,073	47,03,161	7,15,26,690	1,14,50,361	3,32,467	1,65,37,979	756	3,387,495	4 14 1

* Audited figures.

TARKESSUR BRANCH RAILWAY.

Approximate Return of Traffic for week ended 18th March 1905 on 22·23 miles open.

	Coaching Traffic.		Merchandise and Mineral Traffic.		Other earnings (estimated).	Total earnings.	Traffic Train-miles run.		
	No. of passengers.	Coaching receipts.	Weight carried.	Receipts.			Coaching.	Merchandise.	Total.
		Rs. A. P.	Mds. s.	Rs. A. P.	Rs. A. P.	Rs. A. P.			
Total traffic for the week	25,057	6,187 0 0	17,896 0	819 0 0	7 0 0	7,023 0 0	903	285	1,188
Or per mile of railway	.....	279 5 1	.....	37 4 8	0 5 0	315 14 9	.....	.....	.....
For previous 10 weeks of half-year	*246,447	*58,351 0 0	†1,90,691 0	17,639 0 0	366 0 0	65,046 0 0	§9,618	§2,240	11,858
Total for 11 weeks ...	271,534	64,438 0 0	2,08,487 0	8,458 0 0	73 0 0	72,969 0 0	10,581	2,465	13,046
COMPARISON.									
Total for corresponding week of previous year	25,492	6,232 6 3	20,669 10	1,041 14 0	11 1 6	7,285 7 9	1,048	140	1,188
Per mile of railway corresponding week of previous year	.....	282 9 10	.....	46 13 10	0 8 0	329 15 8	.....	.....	...
Total for corresponding 11½ weeks of previous year	296,462	70,834 0 4	2,51,704 10	8,944 13 0	78 13 9	79,757 10 1	11,527	1,845	13,772

* Deducted No. of passengers 1,415 and Rs. 400
† Added Mds. 2,729 and " 39
‡ " Ditto. " 3
§ Audited figures up to 4th February 1905.

} on account of difference between the approximate and audited figures for the week ended 4th February 1905.

1905 *Abstract of progressive weekly returns of all earnings for 1905 in comparison with 1904.*

Open mileage.	Period.	Coaching Traffic.		Merchandise and Mineral Traffic.		Other earnings.	Total.	Per mile of railway.	Train mileage.	
		No. of passengers.	Rs.	Mds.	Rs.	Rs.	Rs.	Rs.	No.	Rate. Rs. A. P.
*22·23	Week ended 7th Jan. ...	20,710	4,788	21,836	805	6	5,597	252	1,188	4 15 5
*22·23	" " 14th " ...	21,862	4,931	18,781	603	4	5,537	249	1,188	4 10 7
*22·23	" " 21st " ...	22,581	5,285	23,026	844	6	6,136	276	1,188	5 2 0
*22·23	" " 28th " ...	21,754	4,994	19,716	726	7	5,727	258	1,188	4 16 7
*22·23	" " 4th Feb. ...	20,048	4,693	18,013	652	11	5,351	224	1,188	4 8 9
22·23	" " 11th " ...	20,126	5,078	17,358	770	8	5,856	263	1,188	4 14 10
22·23	" " 18th " ...	18,290	4,754	15,084	691	7	5,452	241	1,188	4 9 3
22·23	" " 25th " ...	28,557	6,937	24,831	1,094	6	8,037	361	1,188	6 13 5
22·23	" " 4th Mar. ...	23,397	5,459	17,646	941	6	9,606	432	1,188	8 1 4
22·23	" " 11th " ...	21,328	5,146	16,186	730	5	5,881	264	1,188	4 7 1
22·23	" " 18th " ...	25,057	6,187	17,896	839	7	7,023	316	1,188	5 14 7
	Totals up to date ...	271,534	64,438	2,08,487	8,458	73	72,969	293	13,068	5 9 6

Abstract of progressive weekly returns of all earnings for 1905 in comparison with 1904—concluded. 1904.

		No. of passengers.	Rs.	Mds.	Rs.	Rs.	Rs.	Rs.	No.	Rate. Rs. A. P.
21·22	First 9 days of Jan. ...	20,125	4,268	20,289	1,003	14	7,285	328	1,540	4 11 2
21·22	Week ended 14th " ...	19,705	4,483	17,968	882	9	5,374	243	1,188	4 4 4
21·22	" " 21st " ...	21,843	5,023	18,703	702	8	5,830	267	1,188	4 9 9
21·22	" " 28th " ...	24,150	5,814	20,322	768	1	6,613	297	1,188	5 9 1
21·22	" " 4th Feb. ...	28,958	7,082	26,749	794	8	7,879	354	1,188	6 10 1
21·22	" " 11th " ...	23,690	6,151	20,372	630	6	6,816	306	1,232	5 8 6
21·22	" " 18th " ...	39,816	10,031	32,302	1,332	4	11,367	515	1,496	7 9 11
21·22	" " 25th " ...	25,892	6,146	24,750	896	10	7,052	317	1,188	5 15 0
21·22	" " 4th Mar. ...	24,969	6,731	19,157	684	6	7,411	333	1,188	6 3 16
21·22	" " 11th " ...	29,231	6,980	27,319	963	7	8,956	313	1,188	7 13 8
21·22	" " 18th " ...	25,433	6,253	19,680	1,042	11	7,336	330	1,188	6 2 9
	Totals up to date ...	296,462	70,834	2,51,704	8,943	79	79,756	318	13,772	5 13 8

* Audited figures.

DELHI-UMBALLA-KALKA RAILWAY.

Approximate Return of Traffic for week ended 18th March 1905 on 162·36 miles open.

	Coaching Traffic.		Merchandise and Mineral Traffic.		Other earnings (estimated).	Total earnings.	Traffic Train-miles run.		
	No. of passengers.	Coaching receipts.	Weight carried.	Receipts.			Coaching.	Merchandise.	Total.
		Rs. A. P.	Mds. S.	Rs. A. P.	Rs. A. P.	Rs. A. P.			
Total traffic for the week	24,647	(a)20,737 0 0	1,05,102 0	13,520 0 0	100 0 0	34,347 0 0	9,218	3,482	12,700
Or per mile of railway ...	.....	127 10 7	.....	83 4 4	0 9 10	211 8 9	.....	.....	.....
For previous 10 weeks of half-year	223,457*	1,78,340 0 0*	14,56,970 0†	1,37,043 0 0†	953 0 0‡	3,16,343 0 0	92,930§	37,038§	129,964
Total for 11 weeks ...	248,104	1,99,076 0 0	15,62,072 0	1,50,563 0 0	1,053 0 0	3,50,692 0 0	102,154	40,510	142,664
COMPARISON.									
Total for corresponding week of previous year.	76,587	45,410 11 8	87,069 0	11,912 7 0	131 11 0	57,454 13 8	14,335	3,055	17,390
Per mile of railway corresponding week of previous year.	.....	279 11 1	.....	73 5 11	0 13 0	353 14 0	.....	.....	.....
Total for corresponding 11½ weeks of previous year.	295,557	2,29,358 6 4	14,30,988 30	1,38,483 13 0	616 4 0	3,68,460 7 4	111,832	39,468	151,300

(a) The decrease is due to the Thanesaur *Mela* in 1904.
* Deducted No. of passengers 163 and Rs. 1,743 } On account of difference between the approximate and audited figures for the week ended 4th
† Do. Mds. 26,092 and „ 2,247 } February 1905.
‡ Added „
§ Audited figures up to 4th February 1905.

1905. *Abstract of progressive weekly returns of all earnings for 1905 in comparison with 1904.*

Open mileage.	Period.	Coaching Traffic.		Merchandise and Mineral Traffic.		Other earnings.	Total.	Per mile of railway.	Train mileage.	
		No. of passengers.	Rs.	Mds.	Rs.	Rs.	Rs.	Rs.	No.	Rate. Rs. A. P.
*162·36	Week ended 7th Jan. ...	21,303	19,621	2,37,429	11,933	91	30,645	189	12,992	2 5 9
*162·36	„ „ 14th „ ...	21,276	18,805	1,18,935	13,536	107	32,448	200	13,092	2 7 9
*162·36	„ „ 21st „ ...	20,051	18,772	1,32,260	13,546	108	32,426	181	13,513	2 2 10
*162·36	„ „ 28th „ ...	22,939	17,988	1,26,107	17,714	115	36,207	215	13,263	2 10 1
*162·36	„ „ 4th Feb. ...	21,422	18,086	1,07,193	11,213	79	27,278	168	14,731	1 12 3
162·36	„ „ 11th „ ...	21,955	17,340	1,18,253	12,930	72	29,332	194	12,819	2 5 3
162·36	„ „ 18th „ ...	24,084	17,473	1,21,208	14,257	94	31,816	196	13,156	2 6 9
162·36	„ „ 25th „ ...	24,308	19,671	1,26,555	13,876	96	33,643	204	12,942	2 8 10
162·36	„ „ 4th Mar. ...	23,851	18,724	1,31,974	14,776	97	33,597	207	12,622	2 10 4
162·36	„ „ 11th „ ...	24,998	19,407	1,38,668	13,992	104	33,513	205	12,786	2 9 8
162·36	„ „ 18th „ ...	24,647	20,737	1,05,102	13,520	100	34,347	212	12,700	2 11 3
	Totals up to date ...	248,104	1,99,076	15,62,072	1,50,563	1,053	3,50,692	196	142,664	2 7 4

Abstract of progressive weekly returns of all earnings for 1905 in comparison with 1904—concluded. 1904.

		No. of passengers.	Rs.	Mds.	Rs.	Rs.	Rs.	Rs.	No.	Rate. Rs. A. P.
162·36	First 9 days of Jan. ...	24,346	22,472	1,04,228	12,583	53	35,078	216	16,246	2 1 11
162·36	Week ended 14th „ ...	18,196	13,980	97,897	15,697	51	29,728	183	12,769	2 1 6
162·36	„ „ 23rd „ ...	18,210	14,767	1,03,821	11,437	44	26,248	162	12,924	2 0 6
162·36	„ „ 30th „ ...	20,112	18,198	2,06,450	13,841	29	34,068	210	13,068	2 9 9
162·36	„ „ 6th Feb. ...	20,615	16,244	1,35,164	12,695	31	27,970	172	12,038	2 5 1
162·36	„ „ 13th „ ...	20,510	17,040	1,47,717	13,311	59	30,930	184	13,346	2 3 10
162·36	„ „ 20th „ ...	21,938	19,060	1,40,703	13,216	61	31,338	193	12,747	2 7 7
162·36	„ „ 27th „ ...	22,362	19,667	1,38,396	15,005	45	34,806	214	12,805	2 11 3
162·36	„ „ 6th Mar. ...	22,770	20,254	1,28,894	10,924	81	31,557	196	13,180	2 6 1
162·36	„ „ 13th „ ...	23,169	20,548	96,548	10,403	54	30,985	207	14,439	2 5 2
162·36	„ „ 20th „ ...	26,587	45,411	97,069	11,912	133	57,456	354	17,390	3 4 10
	Totals up to date ...	295,557	2,29,358	14,30,988	1,38,483	619	3,68,460	201	151,300	2 7 0

* Audited figures.

SOUTH BEHAR RAILWAY.

Approximate Return of Traffic for week ended 18th March 1905 on 78·76 miles open.

	Coaching Traffic.		Merchandise and Mineral Traffic.		Other earnings (estimated).	Total earnings.	Traffic train-miles run.		
	Number of passengers.	Coaching receipts.	Weight carried.	Receipts.			Coaching.	Merchandise.	Total
		Rs. A. P.	Mds. s.	Rs. A. P.	Rs. A. P.	Rs. A. P.			
Total traffic for the week	12,858	6,574 0 0	48,150·0	2,689 0 0	28 0 0	9,291 0 0	1,653	682	2,335
Or per mile of railway	.....	82 7 6	.....	34 2 3	0 5 5	117 15 5	.....	.....	.....
For previous 10 weeks of half-year	*134,140	*67,648 0 0	†5,26,961 0	†30,468 0 0	2295 0 0	96,436 0 0	§16,626	§16,945	33,571
Total for 11 weeks ...	146,998	74,217 0 0	5,78,101 0	33,157 0 0	323 0 0	1,07,727 0 0	18,279	16,927	35,206
COMPARISON.									
Total for corresponding week of previous year.	14,054	7,049 11 9	94,570 20	5,181 1 0	43 10 0	12,273 6 9	1,754	1,403	3,157
Per mile of railway corresponding week of previous year.	.....	89 8 8	.....	65 13 6	0 8 8	155 13 4	.....	.....	.....
Total for corresponding 11½ weeks of previous year.	150,375	76,219 9 4	5,95,122 30	49,353 9 0	387 9 3	1,26,960 2 7	18,224	13,519	31,743

* Added No. of passengers 879 and Rs. 306 } On account of difference between the approximate and audited figures for the week ended
† Deducted Mds. 7,908 and Rs. 656 } 4th February 1905.
‡ Added Rs. 1
§ Audited figures up to 4th February 1905.

1905. *Abstract of progressive weekly returns of all earnings for 1905 in comparison with 1904.*

Open mileage.	Period.	Coaching Traffic.		Merchandise and Mineral Traffic.		Other earnings.	Total.	Per mile of railway.	Train mileage.	
		No. of Passengers.	Rs.	Mds.	Rs.	Rs.	Rs.	Rs.	No.	Rate. Rs. A. P.
*78·76	Week ended 7th Jan. ...	14,187	6,986	55,900	2,640	24	9,650	123	3,471	2 12 6
*78·76	,, ,, 14th ,, ...	12,404	5,946	63,910	3,023	33	9,002	124	3,286	2 15 5
*78·76	,, ,, 21st ,, ...	12,296	6,123	58,457	2,810	23	8,995	114	3,201	2 11 6
*78·76	,, ,, 28th ,, ...	12,909	6,060	56,307	2,635	25	8,940	114	3,227	2 12 4
*78·76	,, ,, 4th Feb. ...	13,642	6,170	69,046	3,302	35	10,057	128	3,415	2 15 2
78·76	,, ,, 11th ,, ...	13,369	6,351	64,712	2,534	26	8,911	113	3,205	2 11 1
78·76	,, ,, 18th ,, ...	13,893	7,115	66,978	2,470	24	10,619	135	3,208	3 3 4
78·76	,, ,, 25th ,, ...	16,274	8,131	68,692	3,113	33	11,278	144	3,208	3 7 0
78·76	,, ,, 4th March ...	15,823	7,793	64,206	2,715	23	10,135	129	3,208	3 1 0
78·76	,, ,, 11th ,, ...	13,216	6,560	62,913	2,948	25	9,533	121	2,914	3 6 6
78·76	,, ,, 18th ,, ...	12,856	6,274	62,180	2,690	18	9,291	118	2,536	3 15 8
	Totals up to date ...	146,996	74,217	5,78,101	33,157	323	1,07,727	134	33,206	3 1 0

Abstract of progressive weekly returns of all earnings for 1905 in comparison with 1904—concluded. *1904.*

		No. of Passengers.	Rs.	Mds.	Rs.	Rs.	Rs.	Rs.	No.	Rate. Rs. A. P.
78·76	First 9 days of Jan. ...	10,583	7,103	53,110	4,078	26	11,631	150	3,220	3 9 6
78·76	Week ended 16th ,, ...	11,136	5,312	49,913	3,037	24	8,973	116	3,242	2 12 8
78·76	,, ,, 23rd ,, ...	13,408	6,859	54,637	4,283	17	11,159	142	3,199	4 4 8
78·76	,, ,, 30th ,, ...	12,814	6,140	50,736	4,191	28	10,378	133	3,726	3 13 3
78·76	,, ,, 6th Feb. ...	12,078	6,436	59,391	4,149	25	10,713	136	3,231	3 13 6
78·76	,, ,, 13th ,, ...	13,063	6,915	60,588	4,119	24	11,058	140	3,736	4 0 2
78·76	,, ,, 20th ,, ...	14,488	7,977	1,15,081	3,831	27	11,735	149	3,993	3 16 8
78·76	,, ,, 27th ,, ...	13,876	7,538	69,468	4,173	44	11,756	149	3,670	4 6 3
78·76	,, ,, 5th March ...	13,106	7,226	61,662	4,061	70	11,359	144	3,990	3 12 10
78·76	,, ,, 12th ,, ...	15,006	7,541	1,07,297	7,136	80	14,717	187	3,330	4 8 12
78·76	,, ,, 19th ,, ...	14,054	7,050	94,571	5,181	43	12,273	156	3,157	3 14 9
	Totals up to date ...	150,375	76,220	5,95,133	49,353	387	1,25,960	142	31,743	3 15 6

* Audited figures.

EAST INDIAN RAILWAY.

Approximate Return of Traffic for week ended 25th March 1905 on 1,962·25 miles open.

	Coaching Traffic.		Merchandise and Mineral Traffic.		Other earnings (estimated).	Total earnings.	Traffic Train-miles run.		
	No. of passengers.	Coaching receipts.	Weight carried.	Receipts.			Coaching.	Merchandise.	Total.
		Rs. A. P. (a)	Mds. S.	Rs. A. P. (b)	Rs. A. P.	Rs. A. P.			
Total traffic for the week ...	395,844	3,76,786 0 0	65,21,231 0	11,21,881 0 0	32,850 0 0	15,31,517 0 0	115,016	186,064	301,080
Or per mile of railway	.....	192 0 3	.....	571 11 9	16 21 10	780 7 10	.....	.....	.....
For previous 6 weeks of half-year	4,505,296*	45,57,251 0 0*	7,10,17,001 0†	1,20,62,755 0 0†	3,56,215 0 0†	1,69,76,221 0 0	1,277,262§	1,992,485§	3,269,737
Total for 12 weeks ...	4,901,140	49,34,037 0 0	7,75,38,232 0	1,31,84,636 0 0	3,89,065 0 0	1,85,07,738 0 0	1,392,208	2,178,549	3,570,817
COMPARISON.									
Total for corresponding week of previous year	387,307	4,08,552 2 1	57,18,281 20	10,04,200 6 9	31,106 4 10	14,43,948 13 8	110,846	188,786	299,632
Per mile of railway corresponding week of previous year ...	.....	211 3 1	.....	519 2 5	16 1 3	746 6 9	.....	.....	.....
Total for corresponding 12½ weeks of previous year	5,152,380	51,61,713 11 5	7,70,44,321 20	1,24,56,641 14 3	3,63,573 5 1	1,79,81,927 14 9	1,397,313	2,239,814	3,637,127

(a) The decrease is chiefly due to Thanesar *mela* in 1904.
(b) The increase is chiefly in coal.
* Added No. of passengers 5,160 and deducted Rs. 13,199 } On account of difference between the approximate and audited figures for the week ended
† Do. Mds. 1,29,379 .. .. 20,388 } 11th February 1905.
‡ Deducted .. 482
§ Audited figures up to 11th February 1905.

1905. *Abstract of progressive weekly returns of all earnings for 1905 in comparison with 1904.*

Open mileage.	Period.	Coaching Traffic.		Merchandise and Mineral Traffic.		Other earnings.	Total.	Per mile of railway.	Train mileage.	
		No. of passengers.	Rs.	Mds.	Rs.	Rs.	Rs.	Rs.	No.	Rate. Rs. A. P.
*1,932·87	Week ended 7th Jan. ...	373,540	3,80,660	66,67,706	11,42,288	30,547	15,53,495	803	297,842	5 4 1
*1,932·87	.. .. 14th	398,534	4,09,154	61,45,960	11,54,861	30,574	15,85,589	820	297,865	5 5 3
*1,932·87	.. .. 21st	383,101	4,27,893	69,60,442	11,86,826	34,487	16,49,206	853	299,187	5 5 4
*1,932·87	.. .. 28th	387,691	3,79,252	71,04,859	11,58,573	32,237	15,67,152	811	302,017	5 3 0
*1,933·87	.. .. 4th Feb. ...	397,491	3,94,602	64,99,831	10,93,994	32,639	15,15,235	784	298,579	5 1 9
*1,932·87	.. .. 11th	416,257	4,32,238	57,34,038	9,74,892	33,939	14,41,013	746	281,503	5 1 11
1,934·40	.. .. 18th	402,634	4,30,230	67,14,140	11,03,305	35,992	15,50,527	805	293,380	5 4 9
1,932·87	.. .. 25th	449,921	4,68,901	63,33,314	10,50,917	32,755	14,92,573	772	280,042	5 5 8
1,949·63	.. .. 4th Mar. ...	483,951	4,48,315	61,80,302	10,32,987	32,427	15,20,729	780	293,644	5 2 10
1,962·25	.. .. 11th	474,327	4,47,221	54,63,933	10,31,645	31,634	15,18,704	774	298,567	5 1 5
1,962·25	.. .. 18th	417,942	4,08,701	65,45,131	11,21,827	32,340	15,63,868	797	292,472	5 5 7
1,962·25	.. .. 25th	395,844	3,76,786	65,21,231	11,21,881	32,850	15,31,517	780	301,080	5 1 5
	Totals up to date ...	4,901,140	49,34,037	7,75,38,232	1,31,84,636	3,89,065	1,85,07,738	786	3,570,817	5 2 11

Abstract of progressive weekly returns of all earnings for 1905 in comparison with 1904—concluded. 1904

		No. of passengers.	Rs.	Mds.	Rs.	Rs.	Rs.	Rs.	No.	Rate. Rs. A. P.
1,934·40	First 9 days of Jan. ...	661,129	5,58,415	79,11,019	13,96,312	36,634	17,91,411	726	379,823	4 11 5
1,934·40	Week ended 16th	623,463	5,29,314	61,02,305	9,99,600	31,739	16,30,653	740	381,620	4 14 8
1,934·40	.. .. 23rd	498,146	4,46,858	55,34,898	9,72,799	29,089	14,48,746	740	382,712	4 14 10
1,934·40	.. .. 30th	469,009	4,21,940	59,79,224	10,05,302	28,379	14,55,621	730	380,668	4 13 5
1,934·40	.. .. 6th Feb. ...	436,193	4,33,302	66,64,167	10,84,783	29,624	15,47,213	800	383,477	5 1 1
1,934·40	.. .. 13th	424,570	4,15,179	68,62,009	10,67,301	30,457	15,51,737	750	386,503	4 14 3
1,934·40	.. .. 20th	450,338	4,44,971	65,97,325	10,54,186	31,553	15,30,714	791	383,135	5 0 6
1,934·40	.. .. 27th	461,547	4,50,783	66,32,951	10,31,090	29,956	15,14,829	783	385,035	4 15 5
1,934·40	.. .. 5th Mar. ...	491,443	3,99,854	66,09,379	9,72,971	29,315	14,02,140	725	393,726	4 8 5
1,934·40	.. .. 12th	444,503	4,32,634	68,27,353	10,19,119	29,631	15,00,633	770	397,392	5 0 6
1,934·40	.. .. 19th	413,952	4,27,151	59,34,129	10,08,086	28,335	14,71,092	702	393,573	4 13 2
1,934·40	.. .. 26th	387,307	4,08,552	57,18,282	10,04,291	31,106	14,43,949	746	230,632	4 13 1
	Totals up to date ...	5,152,390	51,61,713	7,70,44,322	1,24,56,643	3,63,573	1,79,81,928	734	5,637,127	4 14 9

* Audited figures.

TARKESSUR BRANCH RAILWAY.

Approximate Return of Traffic for week ended 25th March 1905 on 22·23 miles open.

	Coaching Traffic.		Merchandise and Mineral Traffic.		Other earnings (estimated).	Total earnings.	Traffic Train miles run.		
	No. of passengers.	Coaching receipts.	Weight carried.	Receipts.			Coaching.	Merchandise.	Total.
		Rs. A. P.	Mds. S.	Rs. A. P.	Rs. A. P.	Rs. A. P.			
Total traffic for the week ...	24,290	5,715 0 0	16,409 0	656 0 0	8 0 0	6,379 0 0	963	225	1,188
Or per mile of railway ...	.....	257 1 4	.....	29 8 2	0 5 9	286 15 3	.....	.....	.....
For previous 11 weeks of half-year	2,73,225*	64,512 0 0*	8,11,900 0†	8,525 0 0†	76 0 0‡	73,113 0 0	10,581§	2,465§	13,046
Total for 12 weeks ...	2,96,515	70,227 0 0	8,28,309 0	9,181 0 0	84 0 0	79,492 0 0	11,544	2,690	14,234
COMPARISON.									
Total for corresponding week of previous year.	22,168	5,469 13 10	19,668 30	776 8 0	14 10 6	6,278 13 4	1,031	157	1,188
Per mile of railway corresponding week of previous year.	.....	246 13 6	.....	34 13 5	0 10 6	282 7 3	.....	.....	.....
Total for corresponding 12½ weeks of previous year.	3,06,630	70,333 13 2	2,71,367 0	9,619 5 0	93 7 3	80,026 9 5	13,258	2,602	16,060

* Added No. of passengers 691 and Rs. 74
† Do. Mds. 3,413 and ,, 67
‡ Do. ,, 3
} On account of difference between the approximate and audited figures for the week ended 11th February 1905.

§ Audited figures up to 11th February 1905.

1905 *Abstract of progressive weekly returns of all earnings for 1905 in comparison with 1904.*

Open mileage.	Period.	Coaching Traffic.		Merchandise and Mineral Traffic.		Other earnings.	Total.	Per mile of railway.	Train mileage.	
		No. of passengers.	Rs.	Mds.	Rs.	Rs.	Rs.	Rs.	No.	Rate. Rs. A. P.
*22·23	Week ended 7th Jan. ...	20,210	4,746	21,698	805	6	5,557	249	1,188	4 15 9
*22·23	,, ,, 14th ,, ...	21,802	4,921	18,783	678	4	5,587	249	1,188	4 10 7
*22·23	,, ,, 21st ,, ...	23,841	5,398	23,026	844	6	6,138	276	1,188	5 2 6
*22·23	,, ,, 28th ,, ...	21,734	4,994	19,716	728	7	5,727	258	1,188	4 14 7
*22·23	,, ,, 4th Feb. ...	20,044	4,626	15,613	583	11	5,251	236	1,188	4 6 9
*22·23	,, ,, 11th ,, ...	21,217	5,183	20,771	837	11	6,030	270	1,188	5 0 6
22·23	,, ,, 18th ,, ...	19,290	4,734	15,894	601	7	5,342	241	1,188	4 8 3
22·23	,, ,, 25th ,, ...	21,527	6,987	24,921	1,088	6	8,031	361	1,188	6 12 3
22·23	,, ,, 4th Mar. ...	20,397	6,659	17,606	841	6	9,506	432	1,188	8 1 6
22·23	,, ,, 11th ,, ...	21,228	5,106	16,166	730	5	5,841	266	1,188	7 7 1
22·23	,, ,, 18th ,, ...	23,087	6,187	17,896	839	7	7,033	316	1,188	5 16 7
22·23	,, ,, 25th ,, ...	24,940	5,715	16,409	656	8	6,379	287	1,188	5 6
	Totals up to date ...	294,515	70,227	2,28,309	9,181	84	79,492	296	14,256	5

Abstract of progressive weekly returns of all earnings for 1905 in comparison with 1904—concluded. 1904.

		No. of passengers.	Rs	Mds.	Rs	Rs.	Rs.	Rs.	No.	Rate. Rs. A. P.
22·23	First 9 days of Jan. ..	26,125	6,988	26,240	1,003	14	7,995	348	1,140	6 11 5
22·23	Week ended 16th ,, ...	19,705	4,683	17,066	652	9	5,074	220	1,152	4 4 4
22·23	,, ,, 23rd ,, ...	21,264	5,139	18,723	703	8	5,850	267	1,152	5 1 0
22·23	,, ,, 30th ,, ...	24,150	5,824	25,282	766	1	6,613	287	1,152	5 9 1
22·23	,, ,, 6th Feb. ...	27,958	7,052	25,799	794	3	7,879	334	1,152	6 10 1
22·23	,, ,, 13th ,, ...	28,650	6,151	20,272	650	6	6,810	292	1,152	5 8 6
22·23	,, ,, 20th ,, ...	39,914	10,661	28,369	726	4	11,397	513	1,440	7 9 11
22·23	,, ,, 27th ,, ...	25,893	6,144	24,754	826	10	7,025	317	1,152	5 16 0
22·23	,, ,, 5th Mar. ...	25,399	6,731	18,197	664	6	7,411	333	1,152	6 3 10
22·23	,, ,, 13th ,, ...	24,231	5,468	27,319	863	7	6,338	313	1,152	5 13 8
22·23	,, ,, 19th ,, ...	26,438	6,263	26,060	1,043	11	7,317	330	1,152	6 5 9
22·23	,, ,, 26th ,, ...	24,166	5,690	19,663	774	13	6,476	283	1,152	5 4 7
	Totals up to date ...	3,04,630	76,294	2,71,367	9,619	94	86,037	315	14,060	5 13

* Audited figures.

DELHI-UMBALLA-KALKA RAILWAY.

Approximate Return of Traffic for week ended 25th March 1905 on 162·36 miles open.

	Coaching Traffic.		Merchandise and Mineral Traffic.		Other earnings (estimated).	Total earnings.	Traffic Train-miles run.		
	No. of passengers.	Coaching receipts.	Weight carried.	Receipts.			Coaching.	Merchandise.	Total.
		Rs. A. P.	Mds. S.	Rs. A. P.	Rs. A. P.	Rs. A. P.			
Total traffic for the week ...	23,856	(a)13,239 0 0	1,41,467 0	13,068 0 0	95 0 0	26,312 0 0	9,439	3,736	13,164
Or per mile of railway	.....	112 4 5	.....	86 2 6	0 9 4	199 0 3	.....	.....	.....
For previous 11 weeks of half-year	246,280*	1,99,185 0 0*	17,19,491 0†	1,55,684 0 0†	1,094 0 0§	3,55,964 0 0	101,714	40,951	142,665
Total for 12 weeks ...	721,136	2,17,414 0 0	18,60,958 0	1,68,672 0 0	1,190 0 0	3,88,276 0 0	111,153	44,676	155,829
COMPARISON.									
Total for corresponding week of previous year	35,077	27,533 11 11	1,58,080 0	15,946 13 0	101 13 0	43,582 4 11	10,376	4,766	15,142
Per mile of railway corresponding week of previous year ...	.....	169 9 4	.....	98 14 7	0 10 0	264 1 11	.....	.....	.....
Total for corresponding 12 weeks of previous year ...	330,634	2,56,893 8 3	15,69,036 30	1,55,730 0 0	720 1 0	4,11,343 13 3	122,895	44,234	166,442

(a) The decrease is chiefly due to Thanesur *Mela* in 1904.
* Added No. of passengers 176 and Rs. 103 } On account of difference between the approximate and audited figures for the week ended 11th February
† Do. Mds. 1,57,419 and " 8,131 } 1905.
‡ Do. " 48
§ Audited figures up to 11th February 1905.

1905. *Abstract of progressive weekly returns of all earnings for 1905 in comparison with 1904.*

Open mileage.	Period.	Coaching Traffic.		Merchandise and Mineral Traffic.		Other earnings.	Total.	Per mile of railway.	Train mileage.	
		No. of passengers.	Rs.	Mds.	Rs.	Rs.	Rs.	Rs.	No.	Rate. Rs. A. P.
*162·36	Week ended 7th Jan. ...	21,276	12,021	2,37,419	11,963	91	24,045	149	12,978	1 8 0
*162·36	" " 14th " ...	21,276	12,588	1,18,935	12,566	107	25,461	200	12,992	1 7 9
*162·36	" " 21st " ...	20,651	12,772	1,32,289	13,516	109	26,396	181	12,813	1 8 10
*162·36	" " 28th " ...	23,089	17,003	1,64,467	17,714	118	34,797	215	13,268	2 10 1
*162·36	" " 4th Feb. ...	21,4.3	13,966	1,07,183	11,313	79	27,278	168	13,731	1 9 3
*162·36	" " 11th " ...	21,231	17,449	2,74,972	17,541	114	35,104	216	12,980	2 11 10
162·36	" " 18th " ...	22,044	17,475	1,61,2 6	14,287	84	31,846	196	13,135	2 6 9
162·36	" " 25th " ...	24,209	19,071	1,32,556	13,676	96	32,843	204	12,946	2 8 10
162·36	" " 4th Mar....	23,051	18,794	1,31,974	14,778	97	33,667	207	13,092	2 10 4
162·36	" " 11th " ...	24,949	19,407	1,35,095	13,808	104	33,319	205	13,786	2 9 3
162·36	" " 18th " ...	24,647	20,737	1,05,108	13,230	109	34,247	213	13,700	2 11 3
162·36	" " 25th " ...	22,264	18,289	1,41,467	13,068	96	32,313	199	13,164	2 7 3
	Totals up to date ...	271,136	2,17,414	18,60,958	1,68,672	1,190	3,88,276	189	144,829	2 7 10

Abstract of progressive weekly returns of all earnings for 1905 in comparison with 1904—concld. 1904

		No. of passengers.	Rs.	Mds.	Rs.	Rs.	Rs.	Rs.	No.	Rate. Rs. A. P.
162·36	First 9 days of Jan. ...	24,346	20,673	1,66,228	13,543	83	34,274	216	13,346	2 1 11
162·36	Week ended 16th " ...	19,166	13,980	97,997	12,427	81	26,708	164	12,769	2 1 6
162·36	" " 23rd " ...	18,218	14,767	1,03,838	11,427	44	26,238	162	12,924	2 0 6
162·36	" " 30th " ...	20,112	18,196	1,08,460	13,861	99	34,056	210	13,466	2 9 9
162·36	" " 6th Feb. ...	20,618	13,544	1,33,164	12,906	51	27,500	173	13,633	2 6 1
162·36	" " 13th " ...	20,810	17,960	1,41,117	12,911	89	30,960	184	13,346	2 5 10
162·36	" " 20th " ...	21,888	19,080	1,49,896	13,216	62	32,358	198	12,747	2 7
162·36	" " 27th " ...	22,363	19,967	1,56,996	13,908	66	34,033	214	12,992	2 11 3
162·36	" " 4th Mar. ...	23,779	20,369	1,28,494	12,934	81	33,387	198	13,149	2 8 1
162·36	" " 11th " ...	23,682	20,169	99,546	10,401	54	30,625	207	14,430	2 5 3
162·36	" " 18th " ...	76,897	46,511	97,869	11,918	193	37,435	254	17,300	2 4 10
162·36	" " 25th " ...	21,977	27,264	1,26,960	13,247	161	40,672	264	13,146	3 13 4
	Totals up to date ...	329,634	2,56,271	15,60,069	1,55,730	720	4,11,343	208	166,442	2 7 7

* Audited figures.

SOUTH BEHAR RAILWAY.

Approximate Return of Traffic for week ended 25th March 1905 on 78·76 miles open.

	Coaching Traffic.		Merchandise and Mineral Traffic.		Other earnings (estimated).	Total earnings.	Traffic Train-miles run.		
	No. of passengers.	Coaching receipts.	Weight carried.	Receipts.			Coaching.	Merchandise.	Total.
		Rs. A. P.	Mds. S.	Rs. A. P.	Rs. A. P.	Rs. A. P.			
Total traffic for the week ...	13,863	7,164 0 0	47,681 0	3,270 0 0	28 0 0	10,462 0 0	1,653	1,103	2,756
Do. per mile of railway ...	.....	90 15 4	.....	41 8 4	0 5 8	132 13 4	.....	.....	.....
Do. for previous 11 weeks of half-year.	147,428*	74,364 0 0*	5,92,273 0	33,670 0 0†	320 0 0‡	1,08,354 0 0	18,337§	17,289§	35,626
Total for 12 weeks ...	161,294	81,528 0 0	6,39,954 0	36,940 0 0	348 0 0	1,18 816 0 0	19,990	18,492	38,482
Comparison.									
Total for corresponding week of previous year.	12,442	6,312 13 7	1,03,182 0	5,775 12 0	26 15 6	12,115 9 1	1,641	1,194	2,835
Per mile of railway corresponding week of previous year.	.....	80 3 5	.....	73 5 4	0 5 6	153 13 3	.....	.....	.....
Total for corresponding 12½ weeks of previous year.	163,807	82,531 6 11	9,98,314 30	55,129 5 0	413 15 9	1,36,075 11 8	19,865	14,713	34,578

* Added No. of passengers 430 and deducted Rs. 147 } On account of difference between the approximate and audited figures for the week ended 11th
† Do. Mds. 17,173 and ,, 488 } February 1905.
‡ Deducted ,, 3
§ Audited figures up to 11th February 1905.

Abstract of progressive weekly returns of all earnings for 1905 in comparison with 1904.

Open mileage.	Period.	Coaching Traffic.		Merchandise and Mineral Traffic		Other earnings.	Total.	Per mile of railway.	Train mileage.	
		No. of passengers.	Rs.	Mds.	Rs.	Rs.	Rs.	Rs.	No.	Rate. Rs. A. P.
78·76	Week ended 7th Jan. ...	14,187	6,986	55,990	2,440	24	9,440	123	3,471	2 12 6
78·76	,, ,, 14th ,, ...	12,404	5,946	68,910	3,023	33	9,002	126	3,306	2 15 5
78·76	,, ,, 21st ,, ...	13,206	6,122	38,457	2,850	23	8,995	114	3,286	2 11 6
78·76	,, ,, 28th ,, ...	13,200	6,060	36,307	2,835	25	8,940	114	3,227	2 12 4
78·76	,, ,, 4th Feb. ...	13,442	6,170	49,946	3,072	35	10,067	128	3,415	2 15 2
78·76	,, ,, 11th ,, ...	12,709	6,466	61,884	3,007	33	9,536	121	3,706	2 5 6
78·76	,, ,, 18th ,, ...	13,982	7,115	64,928	3,470	34	10,619	135	3,396	3 3 4
78·76	,, ,, 25th ,,	13,274	6,151	45,892	3,213	32	11,376	144	3,260	3 7 0
78·76	,, ,, 4th March ...	13,823	7,793	46,906	2,815	28	10,136	129	3,305	3 1 0
78·76	,, ,, 11th ,, ...	13,294	6,980	62,913	3,956	38	9,953	126	3,714	2 6 6
78·76	,, ,, 18th ,, ...	12,856	6,576	68,150	2,940	30	9,291	118	3,234	2 15 3
78·76	,, ,, 25th ,, ...	13,863	7,164	47,681	3,270	28	10,462	133	2,756	3 12 9
	Totals up to date ...	161,294	91,528	6,39,954	36,940	348	1,18,816	126	38,482	3 1 6

Abstract of progressive weekly returns of all earnings for 1905 in comparison with 1904—concluded. *1904.*

		No. of passengers.	Rs.	Mds.	Rs.	Rs.	Rs.	Rs.	No.	Rate. Rs. A. P.
78·76	First 9 days of Jan. ...	13,851	7,103	82,119	4,062	36	11,831	150	3,960	2 9 6
78·76	Week ended 14th ,, ...	11,538	6,312	46,913	2,657	24	8,973	114	3,365	2 13 9
78·76	,, ,, 21st ,,	13,016	6,550	94,887	4,853	17	11,150	142	3,000	3 4 8
78·76	,, ,, 28th ,,	13,514	6,940	66,795	4,101	24	10,375	132	3,795	2 12 2
78·76	,, ,, 4th Feb.	13,022	6,538	58,201	4,149	26	10,713	136	3,951	2 10 6
78·76	,, ,, 11th ,, ...	13,813	6,915	60,522	4,119	24	11,058	140	3,766	2 6 2
78·76	,, ,, 18th ,, ...	14,432	7,877	1,15,031	5,831	37	11,725	149	3,893	3 14 9
78·76	,, ,, 25th ,, ...	13,976	7,536	83,465	4,173	64	11,738	149	3,676	3 3 3
78·76	,, ,, 4th March ...	13,104	7,230	80,586	4,041	75	11,350	144	3,902	2 12 10
78·76	,, ,, 11th ,, ...	13,068	7,041	1,37,357	7,126	50	14,717	187	3,280	4 8 11
78·76	,, ,, 18th ,, ...	14,064	7,080	94,571	5,161	62	12,373	156	3,157	3 14 2
78·76	,, ,, 25th ,, ...	13,443	6,313	1,03,108	5,776	57	12,146	154	2,935	4 4 5
	Totals up to date ...	1,62,807	83,539	9,98,313	55,129	414	1,36,976	143	34,578	3 15 11

* Audited figures.

EASTERN BENGAL STATE RAILWAY.

(INCLUDING N. B., K.-D., BEHAR, DACCA, B.-S. B., AND R.-K. L. RAILWAYS.)

Approximate Return of Traffic and Mileage for the week ended 25th March 1905 on 971 miles open.

	COACHING TRAFFIC.		MERCHANDISE AND MINERAL TRAFFIC.		Other earnings (including ferry).	Total earnings.	TRAFFIC TRAIN-MILES RUN.		
	No. of passengers.	Coaching receipts.	Weight carried.	Receipts.			Coaching.	Merchandise.	Total.
		Rs. A. P.	Mds. s.	Rs. A. P.	Rs. A. P.	Rs. A. P.			
Total traffic for the week ...	201,020	1,20,360 0 0	23,59 340 0	1,46,200 0 0	70,300 0 0	3,45,860 0 0	46,956	31,877	78 813
Or per mile of railway ...	209	123 0 0	2,327 0	151 0 0	†73 0 0	†346 0 0	...	...	...
For previous 11 weeks of half-year*	3,194,514	18,46,837 0 0	1,16 46,660 0	16,32,920 0 0	2,15 955 0 0	33,97,812 0	477,350	407,121	884,471
Total for 12 weeks ...	3,395,534	16,78,197 0 0	1,39,01,900 0	17,79 120 0 0	2,86,255 0 0	37,43,678 0 0	520,306	442,998	963,284
COMPARISON.									
Total for corresponding week of previous year	268,216	1,44,020 0 0	30,77,260 0	2,12,337 0 0	46,376 0 0	4,02,633 0 0	40,491	38,122	78,613
Per mile of railway corresponding week of previous year (893 miles)	290	161 0 0	3,447 0	236 0 0	39 0 0	436 0 0	.....	.....	.....
Total to corresponding date of previous year	3,317,606	16,69,892 0 0	1,65,28,107 0	22,22,014 0 0	3,05,743 0 0	41,98 349 0 0	495,354	505,535	1,000,789

* Audited up to week ended 28th January 1905.
† Excluding ferry earnings, Rs. 9,600.
N.B.—Decrease is chiefly in jute and food grains traffic.

DACCA STATE RAILWAY.

Approximate Return of Traffic and Mileage for the week ended 25th March 1905 on 89 miles open.

	COACHING TRAFFIC.		MERCHANDISE AND MINERAL TRAFFIC.		Other earnings.	Total earnings.	TRAFFIC TRAIN-MILES RUN.		
	No. of passengers.	Coaching receipts.	Weight carried.	Receipts.			Coaching.	Merchandise.	Total.
		Rs. A. P.	Mds. s.	Rs. A. P.	Rs. A. P.	Rs. A. P.			
Total traffic for the week ...	23,770	7,520 0 0	40,280 0	3,130 0 0	850 0 0	11,490 0 0	2,686	1,220	3,906
Or per mile of railway	269	85 0 0	470 0	35 0 0	7 0 0	†135 0 0	.....	.....	.....
For previous 11 weeks of half-year*	259,320	80,240 0 0	2,21,544 0	28,446 0 0	2,046 0 0	1,22,876 0 0	30,394	18,922	49,416
Total for 12 weeks ...	283,090	1,06,260 0 0	2,61,824 0	31,776 0 0	2,896 0 0	1,41,354 0 0	33,180	20,142	53,322
COMPARISON.									
Total for corresponding week of previous year ...	41,567	10,681 0 0	1,04,981 0	3,789 0 0	344 0 0	14,694 0 0	2,234	1,663	4,097
Per mile of railway corresponding week of previous year ...	463	124 0 0	1,213 0	44 0 0	3 0 0	171 0 0	.....	.....	.....
Total to corresponding date of previous year	389 194	1,10,137 0 0	4,70,631 0	36,347 0 0	3,696 0 0	1,50,564 0 0	34,689	23,266	57,955

* Audited up to week ended 28th January 1905.

COOCH BEHAR STATE RAILWAY.

Approximate Return of Traffic and Mileage for the week ended 25th March 1905 on 33·6 miles open.

	COACHING TRAFFIC.		MERCHANDISE AND MINERAL TRAFFIC.		Other earnings (including ferry).	Total earnings.	TRAFFIC TRAIN-MILES RUN.		
	No. of passengers.	Coaching receipts.	Weight carried.	Receipts.			Coaching.	Merchandise.	Total.
		Rs. A. P.	Mds. s.	Rs. A. P.	Rs. A. P.	Rs. A. P.			
Total traffic for the week ...	2,720	1,360 0 0	15,450 0	330 0 0	10 0 0	2,040 0 0	447	1,057†	1,504
Or per mile of railway ...	81	38 0 0	460 0	25 0 0	.....	1 0 0	...	...	...
For previous 11 weeks of half-year*	33,000	14,077 0 0	2,02,000 0	13,436 0 0	100 0 0	27,691 0 0	4,702	17,000	22,302
Total for 12 weeks ...	35,720	15,377 0 0	2,16,410 0	14,256 0 0	110 0 0	29,641 0 0	5,230	18,057	24,126
COMPARISON.									
Total for corresponding week of previous year ...	5,020	1,255 0 0	14,084 0	1,197 0 0	9 0 0	2,271 0 0	806	1,455	2,139
Per mile of railway corresponding week of previous year ...	149	69 0 0	478 0	36 0 0	...	84 0 0	...	...	...
Total to corresponding date of previous year	49,297	18,702 0 0	1,70,494 0	13,111 0 0	149 0 0	29,962 0 0	5,512	20,788	26,300

* Audited up to week ended 28th January 1905.
† Railway from-miles 1,050.

MYMENSINGH-JAGANNATHGANJ RAILWAY.

Approximate Return of Traffic and Mileage for the week ended 25th March 1905 on 51·37 miles open.

	Coaching Traffic.		Merchandise and Mineral Traffic.		Other earnings (including ferry).	Total earnings.	Traffic Train-miles run.		
	No. of passengers.	Coaching receipts.	Weight carried.	Receipts.			Coaching.	Merchandise.	Total
		Rs. A. P.	Mds. S.	Rs. A. P.	Rs. A. P.	Rs. A. P.			
Total traffic for the week	7,540	2,380 0 0	7,580 0	510 0 0	10 0 0	2,900 0 0	1,535	393	1,428
Or per mile of railway	143	46 0 0	144 0	10 0 0	...	56 0 0	.....	.....	.....
For previous 11 weeks of half-year*	83,336	26,121 0 0	1,31,153 0	7,641 0 0	177 0 0	33,939 0 0	11,357	4,429	15,786
Total for 12 weeks ...	90,876	28,501 0 0	1,38,733 0	8,151 0 0	187 0 0	36,839 0 0	12,892	4,822	17,214
COMPARISON.									
Total for corresponding week of previous year	20,440	5,114 0 0	15,642 0	766 0 0	26 0 0	5,926 0 0	1,207	741	1,948
Per mile of railway corresponding week of previous year	398	97 0 0	297 0	13 0 0		113 0 0	.....	.....	.....
Total to corresponding date of previous year	143,284	41,031 0 0	2,60,837 0	13,411 0 0	364 0 0	55,806 0 0	12,687	8,763	21,450

* Audited up to week ended 28th January 1905.

BENGAL AND NORTH-WESTERN RAILWAY.

Approximate Return of Traffic for the week ending 25th March 1905 on 1,467 miles open.

	Coaching Traffic.		Merchandise and Mineral Traffic.		Other earnings (estimated), including steam-boat.	Total earnings.	Traffic Train-miles run.		
	Number of passengers.	Receipts.	Weight carried.	Receipts.			Coaching.	Merchandise.	Total.
		Rs.	Mds.	Rs.	Rs.	Rs.			
Total traffic for the week on 1,467 miles open	235,090	(a)93,790	883,330	(b)1,19,966	(c)19,490	2,23,150	41,697	(d)42,661	84,358
Or per mile of railway	153·44	60·46	606·22	81·77	13·29	153·52	.....	.....	.....
For previous 11 weeks of half-year (e)	2,671,677	10,97,978	1,16,07,564	14,96,268	2,29,682	28,23,925	470,545	473,913	944,477
Total for 12 weeks ...	2,796,767	11,96,678	1,34,96,534	16,15,236	2,49,172	30,51,1[illegible]	512,242	516,573	1,028,835
COMPARISON.									
Total for corresponding week of previous year on 1,379 miles open	253,090	1,06,464	16,19,496	1,31,135	29,824	2,96,533	39,838	(f)39,464	78,316
Per mile of corresponding week of previous year	183·32	96·67	738·77	95·09	21·27	215 03	.....	.....	.....
Total to corresponding date of previous year	2,811,113	13,03,704	1,34,72,841	16,04,740	2,66,906	31,34,350	456,949	473,067	930,947

(a) Decrease due to *Ram Nagar Mills* at Ajodhya last year.
(b) Ditto chiefly in foreign inward and outward traffic.
(c) Ditto mainly under sundries.
(d) Includes 5,238 miles of ballast trains.
(e) Ditto audited figures up to week ending 11th February 1905.
(f) Ditto 4,090 miles of ballast trains.

BENGAL CENTRAL RAILWAY COMPANY, LIMITED.

Approximate Return of Traffic and Mileage for the week ended 25th March 1905 on 134 miles open.

	Coaching Traffic.		Merchandise and Mineral Traffic.		Other earnings.	Total earnings.	Traffic Train-miles run.		
	Number of passengers.	Coaching receipts.	Weight carried.	Receipts.			Coaching.	Merchandise.	Total.
		Rs. A. P.	Mds. S.	Rs. A. P.	Rs. A. P.	Rs. A. P.			
Total traffic for the week ...	36,679	13,743 0 0	63,696 0	5,021 0 0	15,600 0 0	36,973 0 0	4,074	3,686	7,760
Or per mile of railway	262	†121 0 0	698 0	40 0 0	113 0 0	273 0 0	.....	.....	.....
For previous 11 weeks of half-year*	488,257	1,74,641 0 0	7,96,976 0	64,512 0 0	39,493 0 0	2,68,676 0 0	46,833	33,192	80,025
Total for 12 weeks	471,936	1,90,384 0 0	8,78,791 0	70,163 0 0	45,108 0 0	3,05,649 0 0	51,907	36,798	87,705
COMPARISON.									
Total for corresponding week of previous year	31,668	13,668 0 0	95,851 0	5,988 0 0	13,680 0 0	32,676 0 0	4,783	3,421	7,204
Per mile of railway corresponding week of previous year ...	218	†105 0 0	675 0	43 0 0	94 0 0	242 0 0	.....	.....	.....
Total to corresponding date of previous year	483,473	2,01,893 0 0	13,19,741 0	91,287 0 0	34,204 0 0	3,26,483 0 0	53,369	33,939	88,148

* Audited up to week ended 4th February 1905.
† Coaching traffic calculated on 130 miles only.

ASSAM-BENGAL RAILWAY.

Approximate Return of traffic for the week ended 25th March 1905 on 737 miles open for all descriptions of traffic, and an additional 3 miles for goods traffic only.

	Coaching Traffic.		Merchandise and Mineral Traffic.		Other earnings (estimated), including steam boat.	Total earnings.	Traffic Train-miles run.		
	No. of passengers.	Coaching receipts.	Weight carried.	Receipts.			Coaching.	Merchandise.	Total
		Rs. A. P.	Mds. S.	Rs. A. P.	Rs. A. P.	Rs. A. P.			
Total traffic for the week ...	47,803	32,265 0 0	1,11,569 0	22,499 0 0	1,614 0 0	56,378 0 0	10,257	15,633	25,890
Or per mile of railway	64 86	43·78	150·77	30·40	2·18	76 36	13 92	21·13	35·05
For previous 11 weeks of half-year	538,131	3,61,360 0 0	17,93,363 0	3,84,291 0 0	29,654 0 0	6,75,305 0 0	115,986	165,702	281,688
Total for 12 weeks ..	585,934	3 93,625 0 0	19,04,932 0	3,06,790 0 0	31,268 0 0	7,31,683 0 0	126,243	181,335	307,578
Comparison.									
Total for corresponding week of previous year	49,153	29,316 0 0	1,30,094 0	21,084 0 0	4 208 0 0	55,208 0 0	10,694	12,139	22,838
Per mile of railway corresponding week of previous year	66 69	39·78	175·80	28·49	6·50	74·77	14·51	16 40	30·91
Total to corresponding date of previous year	576,832	3,79,847 0 0	18,45,577 0	2,74,144 0 0	35,048 0 0	6,89,033 0 0	103,288	124,326	227,614

FINANCIAL YEAR.

Approximate Statement of Gross Receipts of the Assam-Bengal Railway.

Receipts for week ending 25th March 1905.			Receipts for week ending 26th March 1904.			Total receipts from 1st April 1904 to 25th March 1905.			Total receipts from 1st April 1903 to 26th March 1904.			Total increase in 1905.	Total decrease in 1905
Mean mileage worked.	Receipts	Per mile worked	Mean mileage worked.	Receipts.	Per mile worked.	Mean mileage worked.	Total receipts.	Per mile worked per week.	Mean mileage worked	Total receipts.	Per mile worked per week.		
	Rs.	Rs.		Rs.	Rs.		Rs.			Rs.		Rs.	
740	56,378	76·36	740	55,208	74·77	740	29,54,734	...	740	25,34,283	...	4,20,451	.. ...

DARJEELING-HIMALAYAN RAILWAY COMPANY, LIMITED.

		Rs. A. P.	Rs A. P.
Approximate earnings for the week ending 1st April 1905 ...	Coaching ...	8 591 0 0	17,834 0 0
	Goods ...	8,914 0 0	
	Other earnings ...	329 0 0	
Audited earnings for the corresponding period of 1904 ...	Coaching ...	8,493 0 0	21,844 0 0
	Goods ..	12,984 0 0	
	Other earnings ...	367 0 0	
	Decrease ...		4,010 0 0
Receipts per mile for the week ending 1st April 1905 ...	... ...		349 11 0
Ditto for the corresponding period of 1904 ...	... ...		428 5 0
	Decrease ...		78 10 0
Receipts from 1st January to 1st April 1905 ...	... ...		1,90,280 0 0
Ditto for the corresponding period of 1904 ...	... ...		2,15,467 0 0
	Decrease ...		25,187 0 0

Printed at the Printing Office, and published by the Book Depôt, of the Bengal Secretariat, Writers' Buildings, in the City of Calcutta, on 12th April 1905.

REGISTERED No. C 209.]

No. 16 of 1905.

The Calcutta Gazette.

WEDNESDAY, APRIL 19, 1905.

CONTENTS.

	Page
PART I.—Orders and Notifications by the Lieutenant-Governor of Bengal, the High Court, Government Treasury, etc.	725—759
PART IA.—Orders and Notifications by the Government of India	93—94
PART IB.—Orders by the Lieutenant-Governor of Bengal	67—70
PART II.—Advertisements	439—440
PART III.—Acts of the Bengal Council	Nil
PART IV.—Bills of the Bengal Council	Nil
PART IVA.—Proceedings of the Bengal Legislative Council	Nil
PART V.—Acts of the Governor-General's Council assented to by the Governor-General	Nil
PART VI.—Bills introduced into the Council of the Governor-General for making Laws and Regulations or published under Rule 23	Nil
APPENDIX.—Marine Notifications	121—126
SUPPLEMENT No. 16:—	
Report on the Administration of the Opium Department in the Lower Provinces, Bengal, during the year 1903-04	545
Rabi Crops in Bengal, 1904-05	551
Decentralisation of Municipal work in Calcutta	563
Liberality of Raja Jogendra Narain Roy of Lalgola	565
Liberality of Maharajah of Mourbhanj	ib
Statistical Return of Crops, Circular and Eastern Canals, Meteorology, Rainfall, Results of Meteorological Observations, Railway Traffic Receipts, etc., etc.	565—613

PART I.

Orders and Notifications by the Lieutenant-Governor of Bengal, the High Court, Government Treasury, &c.

ORDERS BY THE LIEUT.-GOVERNOR OF BENGAL

No. 2822A.

APPOINTMENTS AND TRANSFERS.

GENERAL.—*No. 79A.D.—The 14th April 1905.*—Maulvi Mohammad Habibullah, Deputy Magistrate and Deputy Collector, Monghyr, is transferred temporarily to the head-quarters station of the Bhagalpur district.

Monghyr.
Bhagalpur.

No. 157A.D.—The 15th April 1905.—Babu Gopal Chunder Mookerjee, Deputy Magistrate and Deputy Collector, 24-Parganas, is appointed to act as Magistrate and Collector of Faridpur, during the absence, on leave, of Mr. Purna Chandra Mitter, or until further orders.

24-Parganas.
Faridpur.

No. 164A.D.—The 15th April 1905.—Babu Nityananda Bhar, Deputy Magistrate and Deputy Collector, Ulubaria, Howrah, is transferred to the head-quarters station of the Gaya district.

Howrah.
Gaya.

No. 166A.D.—The 15th April 1905.—Babu Nibaran Chandra Ghatak, Deputy Magistrate and Deputy Collector, Howrah, is appointed to have charge of the Ulubaria subdivision of that district.

Howrah.

No. 236A.D.—The 18th April 1905.—Mr. L. C. Adami, Officiating Joint-Magistrate and Deputy Collector, Darjeeling, is appointed to act as District and Sessions Judge of Bhagalpur, during the absence, on leave, of Mr. W. Teunon, or until further orders.

Darjeeling.
Bhagalpur.

EDUCATION.—*No. 178A.D.—The 15th April 1905.*—Babu Suresh Chundra Gupta, Assistant Head Master, Ravenshaw Collegiate School, Cuttack (class V of the Subordinate Educational Service), acted as Head Master of that School from the 10th to the 18th November 1904.

Cuttack.

No. 251A.D.—The 18th April 1905.—Mr. V. H. Jackson, Officiating Assistant Director of Public Instruction, Bengal, is appointed to have charge of the current duties of the Director of Public Instruction, Bengal, in addition to his own, during the absence, on leave, of Mr. A. Pedler, C.I.E.

Calcutta.

ECCLESIASTICAL.—*No. 143A.D.—The 14th April 1905.*—The Revd. Andrew Warren, a pastor of the London Missionary Society, Calcutta, is authorized, under section 6 of Act XV of 1872, to solemnize marriages between persons one of whom is a Christian or both of whom are Christians, and, under section 9 of the Act, to grant certificates of marriage between persons who are Native Christians.

Calcutta.

The Revd. Andrew Warren is also appointed, under Act VI of 1880, to be a Registrar of Births and Deaths in Calcutta.

LEAVE.

GENERAL.—*No. 155A.D.—The 15th April 1905.*—Mr. Purna Chandra Mitter, Magistrate and Collector, Faridpur, is allowed leave for two months and fifteen days, under article 260 of the Civil Service Regulations, with effect from the 17th April 1905, or any subsequent date on which he may be relieved.

Faridpur.

No. 235A.D.—The 18th April 1905.—Mr. W. Teunon, District and Sessions Judge, Bhagalpur, is allowed combined leave for six months, viz., privilege leave for one month and nineteen days, under article 260 of the Civil Service Regulations, with effect from the afternoon of the 11th April 1905, and special leave for the remaining period under article 316 of the Regulations.

Bhagalpur.

EDUCATION.—*No. 176A.D.—The 15th April 1905.*—Babu Mohini Mohan Chaudhuri, Head Master, Ravenshaw Collegiate School, Cuttack, was on leave from the 10th to the 18th November 1904, under Rule 1 of article 339 of the Civil Service Regulations.

Cuttack.

No. 248A.D.—The 18th April 1905.—Mr. A. Pedler, C.I.E., Director of Public Instruction, Bengal, is allowed leave for one month and twenty-five days, under articles 260 and 301 (*b*) of the Civil Service Regulations, with effect from the forenoon of the 25th April 1905.

Calcutta.

EXCISE.—*No. 89A.D.—The 14th April 1905.*—Mr. Dejen Lala Roy, Inspector of Excise, Western Circle, is allowed leave for one month, under article 260 of the Civil Service Regulations, with effect from the 15th April 1905, or any subsequent date on which he may avail himself of it.

Calcutta.

RESIGNATION.

LEGISLATIVE.—*No. 148A.D.—The 14th April 1905.*—The Lieutenant-Governor is pleased to accept the resignation by the Hon'ble Mr. Leslie Pittendrigh Shirres of his office of Member of the Council of the Lieutenant-Governor of Bengal.

Council.

POWER.

GENERAL.—*No. 226A.D.—The 17th April 1905.*—Babu Kumud Bandhu Das Gupta, Deputy Collector, Faridpur, is vested with the powers of a Collector, under Act I of 1894, in that district.

Faridpur.

THE following orders are republished from the *Assam Gazette*:—

No. 2905G.—The 10th April 1905.—Mr. W. C. M. Dundas, District Superintendent of Police, Cachar, is appointed to hold charge of the Silchar Military Police Battalion until further orders, in addition to his own duties, with effect from the date of receiving charge from Lieutenant H. D. McLaughlin.

No. 3032G.—The 14th April 1905.—Mr. B. B. Newbould, I.C.S., District and Sessions Judge, Sylhet, and Sessions Judge, Cachar, is granted privilege leave for one month and twenty-six days, combined with furlough for six months and four days, under Articles 233 and 308(*b*) of the Civil Service Regulations, with effect from the date on which he may avail himself of the leave

No. 3033G.—The 14th April 1905.—Mr. P. E. Cammiade, I.C.S., Assistant Commissioner, Hailakandi, is appointed to officiate as District and Sessions Judge, Sylhet, and Sessions Judge, Cachar, during the absence, on leave, of Mr. B. B. Newbould, I.C.S., or until further orders.

No. 3034G.—The 14th April 1905.—Mr. S. E. Stinton, I.C.S., Assistant Commissioner, attached to the Sibsagar settlement, is transferred to Hailakandi and appointed to the charge of that subdivision as a temporary measure.

No. 3043G.—The 14th April 1905.—Mr. A. W. Davis, I.C.S., Inspector-General of Police, Prisons, and Registration, and Superintendent of Stamps, Assam, is granted privilege leave for two months and twenty-one days, combined with special leave for three months and nine days, under Articles 233 and 316 of the Civil Service Regulations, with effect from the 22nd April 1905, or the subsequent date on which he may avail himself of the leave.

No. 3047G.—The 14th April 1905.—Mr. F. E. Jackson, I.C.S., Officiating Judge, Assam Valley Districts, on relief by Major D. Herbert, Indian Army, is posted to Gauhati as Deputy Commissioner, Kamrup.

No. 3177G.—The 15th April 1905.—Mr. S. E. Stinton, I.C.S., Assistant Commissioner, Hailakandi, on relief by Mr. C. H. J. Craven, is transferred to Dibrugarh.

No. 75.—The 18th April 1905.—Privilege leave of absence for one month, under Article 260 of the Civil Service Regulations, is granted to Assistant Surgeon Sarat Chandra Biswas, in subordinate medical charge of the Tezpur Dispensary, with effect from the afternoon of the 6th April 1905.

R. W. CARLYLE,
Offg. Chief Secy. to the Govt. of Bengal.

REVENUE DEPARTMENT.

NOTIFICATIONS.

No. 153T.R.—The 15th April 1905.—Mr. A. H. Mee, Extra Assistant Conservator of Forests, on his return on the 31st March 1905 from deputation to certain Tributary States of Orissa, is appointed to the charge of the Sonthal Parganas Division.

Orissa.
Sonthal Parganas.

Mr. P. J. Draper, Extra Assistant Conservator of Forests, on being relieved of the charge of the Sonthal Parganas Division by Mr. Mee, is transferred to the Sundarbans Division as an attached officer.

No. 10T.R.—The 11th April 1905.—Babu Dakshina Ranjan Ghosh, Deputy Magistrate and Deputy Collector, is appointed to the special work connected with the disposal of the surplus lands relinquished on the Assam-Bengal Railway in the districts of Chittagong, Noakhali and Tippera, and the preparation of the verified plans and register of title of the lands in the occupation of that railway, with effect from the date on which he joined his special work.

Chittagong.
Noakhali.
Tippera.

No. 23T.R.—The 12th April 1905.—Each of the undermentioned officers is appointed to be an Assistant Settlement Officer in the district of Backergunge, and is authorised, under section 3 (17) of the Bengal Tenancy Act, VIII of 1885, as amended by Act III (B.C.) of 1898, to discharge the functions of a Revenue Officer, under the provisions of that Act, so far as they relate to Revenue Officers, for the purposes of a survey and the preparation of a record-of-rights in that district,

Backergunge.

He is also vested with the powers of an Assistant Settlement Officer under Rule 1, Chapter VI of the Rules under the Bengal Tenancy Act:—

1. Babu Janaki Bhusan Singha. | 2. Babu Rai Charan Pal.
3. Babu Kshiti Nath Ghose, B.A.

No. 24T.R.—The 12th April 1905.—Babu Rai Krishna Bahadur, Deputy Collector, is vested with the powers of a Collector, under Regulations VII of 1822, IX of 1825 as amended by Regulation III of 1828, and IX of 1833, for the settlement of land revenue in the case of proprietary estates in the district of Shahabad, *vice* Babu Rajani Prosad Neogi, Deputy Collector, transferred.

Shahabad.

No. 25T.R.—The 12th April 1905.—In exercise of the power conferred by section 10 of the Land Improvement Loans Act, 1883 (XIX of 1883), and by section 4(1) of the Agriculturists' Loans Act, 1884 (XII of 1884), and with the previous sanction of the Governor-General in Council, the Lieutenant-Governor of Bengal is pleased to substitute the following revised forms A. B. and D. for those attached to the rules published with the Notifications of the Government of Bengal, in the Revenue Department, No. 930(L.R.) and No. 931(L.R.), dated the 19th February, 1901, as amended by Notifications, Nos. 3397 and 3398L.R, dated the 24th August 1901, No. 684(L.R.), dated the 30th January, 1902, No. 766(L.R.), dated the 1st February, 1902, No. 469(L.R.), dated the 22nd January, 1904, No. 498T.R., dated the 2nd May, 1904, No. 2544L.R., dated the 6th July 1904, No. 3284L.R., dated the 6th August 1904 and No. 3509L.R., dated the 16th August 1904.

I.—UNDER THE LAND IMPROVEMENT LOANS ACT.

FORM A.

Application (see Rule 4).

Name, father's name, residence, &c., of applicant	Amount of loan required.	Nature of security, whether personal or otherwise and whether, if it consists of immoveable property, such property is free from encumbrances, and if not, the nature and extent of the encumbrances.	Nature of proposed improvement.	Situation of the land to be improved.	Applicant's rights in the land.	Proposed dates of repayment.
1	2	3	4	5	6	7

(*Applicant's signature.*)

I/We declare that the statements made by me/us in the above application are true to my/our knowledge, except as to matters stated on information and belief, and as to these I/we believe the same to be true.

Signature of Applicant.

(Reverse of Form A.)

Particulars to be filled in by Inspecting Officer.

I.—Mahal, field number, area of land to be improved ...

II.—Status of applicant, *i.e.*, proprietor or tenant. If a tenant and the landlord's consent is required, whether the landlord objects ... ...

III.—Security—

(i) If the land itself, the value of the applicant's interest in it ... ...

(ii) If personal, the names and status of the co-sureties ...

(iii) If property other than the land itself, its nature, value, and extent of pre-existing encumbrances, if any ...

IV.—The improvement—

(i) Its estimated utility and value.

(ii) Objections, if any, of third parties ... ...

(iii) Probable date on which it will begin to yield profit ...

V.—Repayment—

(i) Suitable date for first instalment with reference to IV (iii) ... ...

(ii) Proposed instalments and period of repayment ...

VI.—Date on which the loan or any instalment thereof should be received by the applicant ... ...

Recommendations of Inspecting Officer.

FORM B.

(*See Rule 10*).

CERTIFICATE GRANTED UNDER THE LAND IMPROVEMENT LOANS ACT 1883.

To *son of* *of*

ON production of this certificate the aforesaid is entitled to receive from the Collector of the following sums on the dates noted against each, as a loan to be expended on (here describe clearly the nature of the improvement) the land specified in the margin :—

Dates.	Amounts.
,,	,,

2. The conditions relating to the making and repayment of this loan are as follows :—

(*a*) That it, with the interest thereon, shall be repayable on the dates and by the amounts specified below :—

Date.	Principal.	Interest.	Total.
,,	,,	,,	,,
,,	,,	,,	,,

(*b*) That in the case of a loan granted by instalments, if the applicant, after taking one or more instalments, fails to take any other instalment within six weeks from the date on which he is entitled to it, the Collector may declare the loan closed. The total of the instalments taken by the applicant shall then constitute the loan, which shall be treated as having been fully paid on the date on which the last instalment was actually taken ; and a fresh arrangement for repayment shall be made by the Collector, consistent with rules 7 and 8, in modification of this certificate.

(*c*) That interest shall be levied for the period intervening between the date of the completion of the loan (in cases in which loans are granted in one payment), or between the dates of the payment of the instalments (in cases in which loans are granted in instalments), and the date from which the first instalment of interest, consolidated with the first instalment of the principal, becomes payable. The interest leviable in such cases shall be demanded in a lump sum six months before the date on which the first consolidated instalment of principal and interest is made payable.

(*d*) That it shall be applied solely to the purpose specified above, and that if it shall be proved to the satisfaction of the Collector that any part of the loan has been misapplied, the whole amount of the loan, shall, with such interest as may have become due thereon, be deemed to have become due.

These clauses to be used only when needed

(*e*) That unless

*the work has been completed by ,†

or any extension of the said date granted by the Collector, the loan shall be held to have been misapplied.

(*f*) That for the repayment of the loan, with any interest due on the same, the immoveable property specified in the margin is hypothecated to Government.

(*g*) That if any instalment is not paid on the due date, the whole amount of the loan shall be deemed to have become due.

(*h*) If it shall be proved to the satisfaction of the Collector that the statements made by the aforesaid in his application for this loan, as to the nature and extent of encumbrances, are in any particular untrue, the Collector may so declare in writing, and thereupon the whole of such loan with such interest as may become due thereon shall forthwith become due and payable.

* Here enter any conditions as to the period or periods appointed for completing the work.
† Here insert the date.

Signature of Collector.

I understand and agree to the aforesaid terms and conditions.

Signature of Certificate-holder.

N. B.—1. Both the land to be improved and all the immoveable property hypothecated as collateral security, whether by the borrower himself or by a surety or sureties, should be described in the marginal specification as nearly as possible in the manner prescribed in section 21 of the Indian Registration Act, 1877.

2. In the description of the immoveable property to be given in the margin of clause (*f*) paragraph 2 above, it shall be stated if the property is free from encumbrances, and, if not, what are the nature and extent of the encumbrances.

FORM D.

(See Rule 10).

Hypothecation Bond to be used when immoveable property is proferred by Collateral Surety.

WHEREAS has on received from the Collector of a certificate under the Land Improvement Loans Act, 1883, in virtue of which he is entitled to receive the aggregate sum of Rs. as a loan from Government; and whereas security for the due application of the loan, and for the punctual repayment of the same, according to the terms of the certificate, is demanded from him, I hereby mortgage to Government the immoveable property mentioned in the schedule below as collateral security, and agree that if he fails to comply with the terms on which the loan has been granted, either by misapplying the same or by failing to pay any instalment on the date fixed for its payment, it shall be lawful for the Collector to recover from the said property such sum as may be necessary to make good the amount which, in consequence of failure to comply with the conditions of the certificate, may be due from me.

Schedule.

I declare that the statements made by in the above schedule as regards the nature and extent of the encumbrances on the immoveable property mortgaged by as security for the repayment of the loan granted to are true to my knowledge, save as to matters stated on information and belief, and as to these I believe the same to be true.

N. B.—1. In describing the immoveable property to be mentioned in the schedule above, it shall be stated whether the property is free from encumbrances, and, if not, what are the nature and extent of the encumbrances.

II.—UNDER THE AGRICULTURISTS' LOANS ACT.

FORM A.

(See Rule 5).

Application.

Name, father's name, residence, &c., of applicant.	Amount of loan required.	Nature of security whether personal or otherwise, and whether, if it consists of immoveable property, such property is free from encumbrances, and if not the nature and extent of the encumbrances.	Object of the loan.	Situation of the land owned or occupied by applicant.	Applicant's rights in the land.	Proposed dates of repayment.
1	2	3	4	5	6	7

(Applicant's signature.)

I declare that the statements made by in the above application are true to my knowledge, except as to matters stated on information and belief, and as to these I believe the same to be true.

Signature of Applicant.

(Reverse of Form A).

Particulars to be filled in by Inspecting Officer.

I.—Field number and area of land owned or occupied by applicant, and mahal in which it is situated ...

II.—Status of applicant, that is, whether proprietor or tenant

III.—Security—

(i) If an interest of the applicant in immoveable property, then the nature and value of that interest and the extent of pre-existing encumbrances thereon, if any ... ...

(ii) Where sureties offer personal security, their number, names, residence, status, and means ...

(iii) Where sureties offer to mortgage immoveable property then their names, and the nature and value of the property and the extent of pre-existing encumbrances thereon, if any ...

IV.—Repayment—

(i) Suitable date for first instalment with reference to the circumstances under which the loan is applied for

(ii) Proposed instalments and period of repayment ...

V.—Date on which the loan or any instalment thereof should be received by the applicant ... ...

Recommendations of Inspecting Officer.

FORM B.

(*See rule 9.*)

Order granting loan under the Agriculturists' Loans Act, 1884, and the rules made thereunder

to , son of

of

1. On production of this order the aforesaid is entitled to receive from the Collector of . the following sums, on the dates noted against each, as a loan to be expended on (*here describe clearly the object of the loan*) :—

Dates	Amounts.
,,	,,

2. The conditions relating to the making and repayment of this loan are as follows:—

(*a*) That it, with the interest and costs (if any) due in respect thereof, shall be repayable on the dates and by the amount specified below :—

Date.	Principal.	Interest.	Cost.	Total.
,,	,,	,,	,,	,,
,,	,,	,,	,,	,,

(*b*) That in the case of a loan granted by instalments, if the applicant, after taking one or more instalments, fails to take any other instalment within six weeks from the date on which he is entitled to it, the Collector may declare the loan closed. The total of the instalments taken by the applicant shall then constitute the loan, which shall be treated as having been fully paid on the date on which the last instalment was actually taken; and a fresh arrangement for repayment shall be made by the Collector, consistent with Rules 6 and 7, in modification of this order.

(*c*) That interest shall be levied for the period intervening between the date of the completion of the loan (in cases in which loans are granted in one payment), or between the dates of the payment of the instalments (in cases in which loans are granted in instalments), and the date from which the first instalment of interest, consolidated with the first instalment of the principal, becomes payable. The interest leviable in such cases, shall be demanded in a lump sum six months before the date on which the first consolidated instalment of principal and interest is made payable.

(*d*) That it be applied solely to the purpose specified above, and that, if it is proved to the satisfaction of the Collector that any part of the said loan has been misapplied, the whole amount of the loan shall, with such interest and costs (if any) as may have become payable in respect thereof, be deemed to have become due.

(*e*) That if any instalment is not repaid on the due date, the whole amount payable in respect of the loan shall be deemed to have become due.

(*f*) That as security for the repayment of the loan, with any interest and costs that may become payable in respect of the same, the immoveable property specified in the margin is hereby mortgaged to Government.

This clause is to be inserted when the security for the repayment of the loan consists of the mortgage of an interest of the applicant in immoveable property.

(*g*) If it shall be proved to the satisfaction of the Collector that the statements made by the aforesaid in his application for this loan, as to the nature and extent of encumbrances, are in any particular untrue, the Collector may so declare in writing and thereupon the whole of such loan with such interest as may become due thereon shall forthwith become due and payable.

(*Signature of Collector.*)

I understand and agree to the aforesaid terms and conditions.

(*Signature of person to whom the loan is made.*)

N B.—In the description of the immoveable property to be given in the margin of clause (*f*) paragraph 2 above, it shall be stated if the property is free from encumbrances, and if not, what are the nature and extent of the encumbrances.

FORM D.

(See rule 9.)

Security bond to be used when the security given by a surety or sureties consists of a mortgage of immoveable property.

WHEREAS has on received from the Collector of an order under the Agriculturists' Loans Act, 1884, and the rules made thereunder in virtue of which he is entitled to receive the sum of Rs. as a loan from Government for the purpose of (*here state the purpose for which the loan is given*) and whereas security for the due application of the loan and for the punctual repayment of the same according to the terms of the order is demanded from the said I (*or* we) mortgage to Government the immoveable property mentioned in the schedule below as security for the purposes aforesaid and agree that if the said fails to comply with the terms on which the loan has been sanctioned either by misapplying the said loan or by failing to repay any instalment of the same or any interest or costs payable in respect thereof on the date on which it may become due it shall be lawful for the Collector to recover from $\frac{me}{us}$ personally or from the said property or from both such sum as may be necessary to make good the amount which in consequence of the said 's default may have become due to Government.

Schedule.

II.

$\frac{I}{We}$ declare that the statements made by $\frac{me}{us}$ in the above schedule as regards the nature and extent of the encumbrances on the immoveable property mortgaged by $\frac{me}{us}$ as security for the repayment of the loan granted to are true to $\frac{my}{our}$ knowledge, save as to matters stated on information and belief, and as to these $\frac{I}{we}$ believe the same to be true.

Signature.

N.B.—In describing the immoveable property to be mentioned in the Schedule above, it shall be stated whether the property is free from encumbrances and, if not, what are the nature and extent of the encumbrances.

No. 26 T.R.—The 12th April 1905.—Babu Chandra Kumar Sen, Sub-Deputy Collector, at present employed as an Assistant Settlement Officer in the district of Ranchi, is appointed to be an Assistant Settlement Officer in the district of Backergunge.

Ranchi.
Backergunge.

No. 125 T.R.—The 14th April 1905.—The following corrections are hereby made in Notifications No. 4131L.R., dated the 25th November 1902, published at pages 1609-10, Part I of the *Calcutta Gazette* of the 26th idem, and No. 3634L.R., dated the 3rd December 1903, published at pages 1574-75, Part I, of the *Calcutta Gazette* of the 9th idem:—

Murshidabad and Birbhum.

For Seenuti	(serial No.	76)	*read*	Sunuti (*alias*) Sarnohati.
„ Guntia	(„	„ 79)	„	Gulutia
„ Dorthobilla bajbilla	(„	„ 83)	„	Dottoboddya-Bajeboddya.
„ Syad Kulta	(„	„ 87)	„	Syad Kulata.
„ Bhalta	(„	„ 90)	„	Bholta.
„ Bilkamli	(„	„ 92)	„	Bil Karuli.
„ Jaikrisnapur (*alias*) Palitapoa.	(„	„ 96)	„	Joykrisnapur (*alias*) Palitapara.
„ Bonnalipara	(„	„ 103)	„	Bonomalipur.
„ Bil Chenti	(„	„ 113)	„	Bilohauti.
„ Protappore Hat Chandpore.	(„	„ 117)	„	Protappore Hatchandpara.
„ Rangamati Chandpore	(„	„ 119)	„	Rangamati Chandpara.

No. 143 T.R.—The 15th April 1905.—Mr. L. E. B. Cobden-Ramsay, I.C.S., Officiating Joint-Magistrate and Deputy Collector, is appointed to be Registrar of Co-operative Credit Societies for Bengal, under section 5 of the Co-operative Credit Societies Act, 1904 (Act X of 1904).

No. 162 T.R.—The 17th April 1905.—Whereas the Manager of the Bhukailash Estate, now under the Court of Wards, has applied for the survey and the preparation of a record-of-rights in respect of all lands included in the villages named below, appertaining to Estate Patikara, in pargana Patikara, bearing No. 208 in the revenue-roll of the district of Tippera but situated in the district of Dacca:

Tippera.
Dacca.

In exercise of the powers conferred upon him by section 101 (2) (*c*) of the Bengal Tenancy Act, VIII of 1885, as amended by Act III (B.C.) of 1898, the Lieutenant-Governor is pleased to direct that a survey shall be made and a record-of-rights be prepared in respect of all lands included in the said villages.

The particulars to be recorded in the survey and record-of-rights shall be the following:—

(*a*) the name of each tenant or occupant;

(*b*) the class to which each tenant belongs, that is to say, whether he is a tenure-holder, raiyat holding at fixed rates, settled raiyat, occupancy-raiyat, non-occupancy raiyat, or under-raiyat; and, if he is a tenure-holder, whether he is a permanent tenure-holder or not, and whether his rent is liable to enhancement during the continuance of his tenure;

(*c*) the situation, quantity and one or more of the boundaries of the land held by each tenant or occupier;

(*d*) the name of each tenant's landlord;

(*e*) the money-rent payable at the time the record-of-rights is being prepared; or if a produce-rent, the fact that produce-rent is paid, and the customary terms according to which such rent is paid;

(*f*) the mode in which that rent has been fixed—whether by contract, by order of a Court, or otherwise;

(*g*) if the rent is a gradually increasing rent, the time at which, and the steps by which, it increases;

(*h*) the special conditions and incidents, if any, of the tenancy;

(*i*) if the land is claimed to be held rent-free, whether or not rent is actually paid, and, if not paid, whether or not the occupant is entitled to hold the land without payment of rent, and, if so entitled, under what authority;

(*j*) the name of each proprietor (including rent-free owner) with the character and extent of his interest, and the situation, quantity, and one or more of the boundaries of each proprietor's private lands, as defined in Chapter XI of the Act;

(*k*) the customs of the villages regulating the methods of irrigation, and the duties and rights of both landlords and tenants with respect to the use and maintenance of the means of irrigation.

List of Villages.

Serial number in this list.	Name of Village.	District in which situated.	Name of Thana.
1	Mahespur	Dacca	Munshiganj.
2	Bhutarchar	Do.	Ditto.
3	Aalirchar	Do.	Ditto.
4	Paschimerchar	Do.	Ditto.
5	Bagherchar	Do.	Ditto.

No. 163T.R.—The 17th April 1905.—Under section 3 of the Bengal Survey Act, V (B.C.) of 1875, the Lieutenant-Governor is pleased to order that a survey shall be made of all lands included in the villages named below, appertaining to estate Patikara, in pargana Patikara, bearing No. 208 on the revenue-roll of the district of Tippera, but situated in the district of Dacca, and that the boundaries of estates, tenures, mauzas and fields be demarcated on the lands so to be surveyed:—

Tippera.
Dacca.

List of villages.

Serial number in this list.	Name of village.	District in which situated.	Name of thana.
1	Mahespur	Dacca ...	Munshiganj.
2	Bhutarchar	Do. ...	Ditto.
3	Aalirchar	Do. ...	Ditto.
4	Paschimerchar	Do. ...	Ditto.
5	Bagherchar	Do. ...	Ditto.

R. W. CARLYLE,
Offg. Chief Secy. to the Govt. of Bengal.

No. 167T.R.—The 17th April 1905.—Mr. E. Burke, Assistant Principal of the Bengal Veterinary College, is granted combined leave for twelve months, viz., privilege leave for three months, under article 260 of the Civil Service Regulations, and furlough for nine months under article 338 of the Civil Service Regulations, with effect from the 5th May 1905, or such subsequent date on which he may avail himself of it.

No. 168T.R.—The 17th April 1905.—Mr. E. H. Brand, Senior Lecturer of the Bengal Veterinary College, is appointed to act as the Assistant Principal of that College during the absence, on leave, of Mr. E. Burke, or unti further orders.

R. W. CARLYLE,
Offg. Chief Secy. to the Govt. of Bengal.

DECLARATION.

No. 37T.R.—The 12th April 1905.—Whereas it appears to the Lieutenant-Governor of Bengal that land is required to be taken by Government at the expense of the Bhadreswar Municipality for a public purpose, viz., for widening the footpath at Dewanjeebagan Lane, in the village of Bhadreswar, pargana Boro, zilla Hooghly, it is hereby declared that for the above purpose a piece of land measuring, more or less, 12 cottahs and 10 chitaks of standard measurement, bounded as follows:—

Hooghly.

Plot No. 1.—On the north and east by Dewanjeebagan Lane, on the south by Monindra Nath Banerjee and Kedar Nath Chakrabutty's land, and on the west by Dewanjeebagan Lane;

„ „ *2.*—On the north by the lands of Saroda Mozumdar, Satya Charan Dhook and Nabin Chandra Sirdar, on the east by Nabin Chandra Sirdar's land, on the south by Dewanjeebagan Lane, and on the west by Satya Charan Dhock's land;

„ „ *3.*—On the north and east by Dewanjeebagan Lane, and on the south and west by Dewanjeebagan tank;

„ „ *4.*—On the north by Bachoo Shaw and Fakir Mullick's land, on the east by Grand Trunk Road, on the south by Narain Chandra Bhattacharjee and Baburam Sinha's land, and on the west by Dewanjeebagan Lane;

is required within the aforesaid village of Bhadreswar.

This declaration is made, under the provisions of section 6 of Act I of 1894, to all whom it may concern.

A plan of the land may be inspected in the office of the Collector of Hooghly.

R. W. CARLYLE,
Offg. Chief Secy. to the Govt. of Bengal.

DECLARATION.

No. 104T.R.—The 14th April 1905.—Whereas it appears to the Lieutenant-Governor of Bengal that land is required to be taken up by Government at the expense of the Nawabganj Municipality, for a public purpose, viz., for a latrine in village Nawabganj, parganas Sherpur, Huzrapur, police-station Nawabganj, zilla Malda, it is hereby declared that for the above purpose a piece of land measuring, more or less, 2 cottahs and 6 chitaks of standard measurement, is required.

Malda.

The boundaries of the land are as follow:—

North.—Patanpara road.
South.—Parti land.
East.—Telipara and Malopara road.
West.—Darga of Mir Saheb and Bamboo tope of Balaram Das.

The plan of the land may be inspected in the office of the Nawabganj Municipality.

This declaration is made, under the provisions of section 6 of Act I of 1894, to all whom it may concern.

R. W. CARLYLE,
Offg. Chief Secy. to the Govt. of Bengal.

DECLARATION.

No. 105T.R.—The 14th April 1905.—Whereas it appears to the Lieutenant-Governor of Bengal that land is required to be taken up by Government at the expense of the Nawabganj Municipality, for a public purpose, viz., for a latrine in village Nawabganj, parganas Sherpur, Huzrapur, police-station

Malda.

Nawabganj, zilla Malda, it is hereby declared that for the above purpose, a piece of land measuring, more or less, 1 cottah and 9 chitaks of standard measurement, is required.

The boundaries of the land are as follow :—

North.—Parti land of Rakhal Chandra De.

South.—Garden of Balaram Das.

East.—Kaliganj road.

West.—Ditch.

The plan of the land may be inspected in the office of the Nawabganj Municipality.

This declaration is made, under the provisions of section 6 of Act I of 1894, to all whom it may concern.

R. W. CARLYLE,
Offg. Chief Secy. to the Govt. of Bengal.

DECLARATION.

Malda.

No. 106T.R.—The 14th April 1905.—Whereas it appears to the Lieutenant-Governor of Bengal that land is required to be taken up by Government at the expense of the Nawabganj Municipality, for a public purpose, viz., for a latrine in village Rehaichuk, pargana Chandlie, police-station Nawabganj, zilla Malda, it is hereby declared that for the above purpose, a piece of land measuring, more or less, 4 cottahs of standard measurement, is required.

The boundaries of the land are as follow :—

North.—Mahananda river.

South.—Balaram Saha's land.

East.—Bathiapara road.

West.—Shib Prosad Mandal and Srinibash Sarkar's land.

The plan of the land may be inspected in the office of the Nawabganj Municipality.

This declaration is made, under the provisions of section 6 of Act I of 1894, to all whom it may concern.

R. W. CARLYLE,
Offg. Chief Secy. to the Govt. of Bengal.

DECLARATION

24-Parganas.

No. 107T.R.—The 13th April 1905.—Whereas it appears to the Lieutenant-Governor of Bengal that land is required to be taken by Government at the public expense for a public purpose, viz., for road diversions of Kamardanga and Gobra-Goristan road in the villages of Kamardanga and Gobra, pargana Dihi Punchannogram, zilla 24-Parganas, it is hereby declared that for the above purpose two pieces of land measuring, more or less, 12 cottahs and 9 chitaks of standard measurement, corresponding to ·2066 acres, bounded as follows, are required within the aforesaid villages of Kamardanga and Gobra :—

Plot A.—On the north and east by the land belonging to Surendra Nath Bose, on the south by Gobra road and the land belonging to Surendra Nath Bose, and on the west by Kamardanga road and the land belonging to Surendra Nath Bose.

Plot B.—On the north by Gobra road, on the east and west by the land belonging to Jogendra Narain Ghose, and on the south by Gobra-Goristan road.

This declaration is made, under the provisions of section 6 of Act I of 1894, to all whom it may concern.

A plan of the land may be inspected in the office of the Executive Engineer, Construction Division, Eastern Bengal State Railway, Sealdah.

R. W. CARLYLE,
Offg. Chief Secy. to the Govt. of Bengal.

DECLARATION.

Patna.

No. 136T.R.—The 14th April 1905.—Whereas it appears to the Lieutenant-Governor of Bengal that land is required to be taken by Government at the public expense for a public purpose, viz, for the Opium Weighment and Settlement Centre at Maghra, Bihar, in the village of Maghra, pargana Pillich, zilla Patna, it is hereby declared that for the above purpose a piece of land measuring, more or less, 11 bighas 14 cottahs and 11·55 chitaks of standard measurement, bounded on the north by the cultivated land of Jhotan Singh, Tengar Hajam and Sheobakhsh Singh, on the south by the garden land of Lotan Singh, on the east by the Golapur-Mirchaigunj Local Board road, on the west by the uncultivated land of Debi Pande and Sheobakhsh Singh, and garden land of Jagdip Singh, is likely to be required within the aforesaid village of Maghra.

This declaration is made, under the provisions of section 6 of Act I of 1894, to all whom it may concern.

A plan of the land may be inspected in the office of the Collector of Patna.

R. W. CARLYLE,
Offg. Chief Secy. to the Govt. of Bengal.

DECLARATION.

No. 137T.R.—The 14th April 1905.—Whereas it appears to the Lieutenant-Governor of Bengal that land is required to be taken by Government at the public expense for a public purpose, viz., for the alignment of new bridge over the river Boor Gandak on the eastern branch of the Tirhut State Railway, in the villages of Bangra, Dharampore, Gobindpore and Akbarpore Pitoujia, parganas Saraisa and Kasma, zilla Darbhanga, it is hereby declared that for the above purpose a piece of land measuring, more or less, 108 bighas 12 cottahs and 9 chitaks of standard measurement, which passes through Bangra, Dharampore, Gobindpore and Akbarpore Pitoujia, is required within the aforesaid villages of Bangra, Dharampore, Gobindpore and Akbarpore Pitoujia.

Darbhanga.

This declaration is made, under the provisions of section 6 of Act I of 1894, to all whom it may concern.

A plan of the land may be inspected in the office of the Collector of Darbhanga at Laheria Serai.

R. W. CARLYLE,
Offg. Chief Secy. to the Govt. of Bengal.

DECLARATION.

No. 138T.R.—The 14th April 1905 —Whereas it appears to the Lieutenant-Governor of Bengal that land is required to be taken by Government at the public expense for a public purpose, viz., for the alignment of new bridge over the river Bagmati on the eastern branch of the Tirhut State Railway, in the villages of Rambhaderpore, Kharsar, Auliabad and Maksudpore, parganas Jakhar and Kharsar, zilla Darbhanga, it is hereby declared that for the above purpose a piece of land measuring, more or less, 104 bighas 6 cottahs and 10 chitaks of standard measurement, which passes through Rambhaderpore, Kharsar, Auliabad and Maksudpore, is required within the aforesaid villages of Rambhaderpore, Kharsar, Auliabad and Maksudpore.

Darbhanga.

This declaration is made, under the provisions of section 6 of Act I of 1894, to all whom it may concern.

A plan of the land may be inspected in the office of the Collector of Darbhanga at Laheria Serai.

R. W. CARLYLE,
Offg. Chief Secy. to the Govt. of Bengal.

DECLARATION.

No. 139T.R.—The 14th April 1905.—Whereas it appears to the Lieutenant-Governor of Bengal that land is required to be taken by Government at the public expense for a public purpose, viz., for the alignment of new bridge over the river Korai on the eastern branch of the Tirhut State Railway, in the villages of Belaspore and Barmotra, pargana Sarai Hamid, zilla Darbhanga, it is hereby declared that for the above purpose a piece of land measuring, more or less, 88 bighas 9 cottahs and 10 chitaks of standard measurement, which passes through Belaspore and Barmotra, is required within the aforsaid villages of Bilaspore and Barmotra.

Darbhanga.

This declaration is made, under the provisions of section 6 of Act I of 1894, to all whom it may concern.

A plan of the land may be inspected in the office of the Collector of Darbhanga at Laheria Serai.

R. W. CARLYLE,
Offg. Chief Secy. to the Govt. of Bengal.

DECLARATION.

No. 146T.R.—The 14th April 1905.—Whereas it appears to the Lieutenant-Governor of Bengal that land is required to be taken up by Government at the expense of the Nowabganj Municipality in the district of Malda for a public purpose, viz., for the site of Municipal office building in village Nawabganj, police-station Nawabganj, zilla Malda, it is hereby declared that for the above purpose a plot of land measuring, more or less, 2 bighas 6 cottahs and 12 chitaks of standard measurement, is required.

Malda.

The boundaries of the land are as follow:—

North.—Protap Chandra Das and Panchcouri Mandal's houses.
South.—Jhelim road.
East.—Gaurhari Mandal, Akhoy Pal, Joy Govinda Das and Kartik Chandra Das' land.
West.—Godagari road.

This declaration is made, under the provisions of section 6 of Act I of 1894, to all whom it may concern.

The plan of the land may be inspected in the office of the Nawabganj Municipality.

R. W. CARLYLE,
Offg. Chief Secy. to the Govt. of Bengal.

GENERAL DEPARTMENT.

NOTIFICATION.

No. 1968.—The 18th April 1905 —In exercise of the powers conferred by the Assam Labour and Emigration Act, 1901 (VI of 1901), the Lieutenant-Governor is pleased to direct that the following amendments shall be made in the rules framed under the Act and to be found at page 73 of the Emigration Manual :—

Insert the words "or in the town of Calcutta the Superintendent of Emigration, Calcutta," in—

(1) rule 27, between the words "recruit" and the words "may direct";
(2) rule 30, between the word "district" and the word "may"; and
(3) rule 32, between the word "Magistrate" and the word "thinks."

Add the words "similar powers shall be exercised in the town of Calcutta by the Superintendent of Emigration, Calcutta," to rule 31.

H. W. C. CARNDUFF,
Offg. Secy. to the Govt. of Bengal.

MEDICAL DEPARTMENT.

No. 161T.M.—The 14th April 1905.—Lieutenant-Colonel J. Lewtas, I.M.S., Professor of Ophthalmic Surgery, Medical College, Calcutta, and Ophthalmic Surgeon, College Hospital, officiated as Inspector-General of Civil Hospitals, Bengal, from the afternoon of the 25th March to the forenoon of the 30th March 1905 in addition to his own duties.

Calcutta.

E. A. GAIT,
Offg. Secy. to the Govt. of Bengal.

JUDICIAL DEPARTMENT.

No. 2823A.

APPOINTMENTS AND TRANSFERS.

No. 218A.D.—The 17th April 1905.—Babu Amrita Nath Mitter, M.A., B.L., is appointed to act as a Munsif in the district of Midnapore, to be ordinarily stationed at Contai, during the absence, on leave, of Babu Ashutosh Mukerjee, or until further orders.

Midnapore.

No. 222A.D.—The 17th April 1905.—Babu Jadu Nath Majumdar, M.A., B.L., is appointed to act as a Munsif in the district of the 24-Parganas, to be ordinarily stationed at Basirhat, during the absence, on leave, of Babu Amrita Lal Mukerjee, or until further orders.

24-Parganas.

LEAVE.

No. 2820A.—The 11th April 1905.—Babu Ashutosh Mukerjee, Munsif of Contai, in the district of Midnapore, is allowed leave for two months and seventeen days, under article 271 of the Civil Service Regulations, with effect from the date on which he may be relieved.

Midnapore.

The 11th April 1905.—Babu Amrita Lal Mukerjee, Munsif of Basirhat, in the district of the 24-Parganas, is allowed leave for one month, under article 271 of the Civil Service Regulations, with effect from the date on which he may be relieved.

24-Parganas.

POWERS.

No. 212A.D.—The 17th April 1905.—Under the authority vested in him by section 357, sub-section (2), of the Code of Criminal Procedure, Act V of 1898, the Lieutenant-Governor empowers Babu Narendra Nath Datta, substantive *pro tempore* Deputy Magistrate, Ranchi, to take down evidence in criminal cases in the English language.

Ranchi.

No. 214A.D.—The 17th April 1905.—In exercise of the power conferred by sub-section (1) of section 565 of the Code of Criminal Procedure, 1898, the Lieutenant-Governor is pleased to empower Maulvi Mahmud-ul-Nabi, a Magistrate of the first class in the district of Mymensingh, to order, at the time of passing sentence of imprisonment on any person referred to in that sub-section, that the residence or change of residence of such person after release shall be notified as provided by the rules made under sub-section (3) of the section.

Mymensingh.

No. 224A.D.—The 17th April 1905.—Babu Syama Kumud Mookerjee, Deputy Magistrate, Darbhanga, is vested with powers under sections 190 (1) (*c*) and 524 of the Code of Criminal Procedure.

Darbhanga.

No. 229A.D.—The 17th April 1905.—In exercise of the power conferred by sub-section (1) of section 565 of the Code of Criminal Procedure, 1898, the Lieutenant-Governor is pleased to empower Babu Mahendra Nath Mukherji, a Magistrate of the first class in the district of Jessore, to order, at the time of passing sentence of imprisonment on any person referred to in that sub-section, that the residence or change of residence of such person after release shall be notified as provided by the rules made under sub-section (3) of the section.

Jessore.

No. 231A.D.—The 17th April 1905.—Under the authority vested in him by section 357, sub-section (2), of the Code of Criminal Procedure, Act V of 1898, the Lieutenant-Governor empowers Maulvi Osman Ali, Munsif of Gunda, in Chota Nagpur, to take down evidence in criminal cases in the English language.

Chota Nagpur.

R. W. CARLYLE,
Offg. Chief Secy. to the Govt. of Bengal.

APPOINTMENTS AND TRANSFERS.

No. 3096J.—The 6th April 1905.—Babu Umesh Chandra Mukerjee and Babu Aghore Nath Saha are re-appointed to be Honorary Magistrates of the Kalna and Katwa Independent Benches, respectively, in the district of Burdwan.

Burdwan.

No. 75J.D.—The 12th April 1905.—Babu Bisnu Lal Mandal is appointed to be an Honorary Magistrate of the Independent Bench at Rampurhât, in the district of Birbhum.

Birbhum.

No. 103J.D.—The 13th April 1905.—Maulvi Abdul Majid is appointed to be an Honorary Magistrate of the Independent Bench at Bajitpur in the district of Mymensingh.

Mymensingh.

No. 137J.D.—The 13th April 1905.—Babu Ashutosh Das Gupta is appointed to be an Honorary Magistrate of the Independent Bench at Pirojpur in the district of Backergunge.

Backergunge.

No. 164J.D.—The 13th April 1905.—Babu Mathura Nath Adhikari is appointed to be an Honorary Magistrate of the Sadar Independent Bench in the district of Bogra.

Bogra.

No. 167J.D.—The 13th April 1905.—Babu Pran Mohan Thakur is appointed to be an Honorary Magistrate of the Sadar Independent Bench at Bhagalpur.

Bhagalpur.

No. 161J.D.—The 14th April 1905.—Babu Kali Kumar Majumdar is appointed to be an Honorary Magistrate of the Ullapara Independent Bench in the district of Pabna.

Pabna.

No. 154J.D.—The 15th April 1905.—Babu Purna Chandra Singh and Maulvi Khondkar Abu Tail are appointed to be Honorary Magistrates of the Kandi Independent Bench in the district of Murshidabad.

Murshidabad.

No. 307J.D.—The 17th April 1905.—Babu Srish Chandra Sarbadhikari is appointed, under section 18 of the Code of Criminal Procedure, to be a Presidency Magistrate for the town of Calcutta.

Calcutta.

RESIGNATIONS.

No. 54J.D.—The 12th April 1905.—The Lieutenant-Governor accepts the resignation tendered by Mr. Phillip William Guest Scott of his appointment as an Honorary Magistrate of the Jamalpur Independent Bench, in the district of Monghyr.

Monghyr

No. 73J.D.—The 12th April 1905.—The Lieutenant-Governor accepts the resignation tendered by Syed Muhammad Abdulla of his appointment as an Honorary Magistrate of the Rampur Hât Independent Bench, in the district of Birbhum.

Birbhum.

No. 93J.D.—The 12th April 1905.—The Lieutenant-Governor accepts the resignation tendered by Mr. Gilbert Henry Langmore of his appointment as an Honorary Magistrate of the Naxalbari (Bagdogra) Independent Bench, in the district of Darjeeling.

Darjeeling.

No. 111J.D.—The 12th April 1905.—The Lieutenant-Governor accepts the resignation tendered by Mr. J. H. Murray of his appointment as Honorary Magistrate at Saidpur, in the district of Rangpur

Rangpur.

No. 157J.D.—The 15th April 1905.—The Lieutenant-Governor accepts the resignation tendered by Babu Ram Taran Siromani of his appointment as an Honorary Magistrate of the Kandi Independent Bench, in the district of Murshidabad.

Murshidabad.

No. 253J.D.—The 15th April 1905.—The Lieutenant-Governor accepts the resignation tendered by Mr. George Lethbridge Colvin of his appointment as an Honorary Magistrate of the Asansol Independent Bench in the district of Burdwan.

Burdwan.

POWERS.

No. 3097J.—The 6th April 1905.—Babu Umesh Chandra Mukerjee and Babu Aghore Nath Saha, who have been re-appointed to be Honorary Magistrates of the Kalna and Katwa Independent Benches, respectively, in the district of Burdwan, are vested with the powers of a Magistrate of the third class.

Burdwan.

No. 76J.D.—The 12th April 1905.—Babu Bisnu Lal Mandal, who has been appointed to be an Honorary Magistrate of the Independent Bench at Rampur Hât, in the district of Birbhum, is vested with the powers of a Magistrate of the third class.

Birbhum.

No. 104J.D.—The 13th April 1905.—Maulvi Abdul Majid, who has been appointed to be an Honorary Magistrate of the Independent Bench at Bajitpur in the district of Mymensingh, is vested with the powers of a Magistrate of the third class.

Mymensingh.

No. 108J.D.—The 13th April 1905.—Babu Ashutosh Das Gupta, who has been appointed to be an Honorary Magistrate of the Independent Bench at Pirojpur in the district of Backergunge, is vested with the powers of a Magistrate of the third class.

Backergunge.

No. 165J.D.—The 13th April 1905.—Babu Mathura Nath Adhikari, who has been appointed to be an Honorary Magistrate of the Sadar Independent Bench, in the district of Bogra, is vested with the powers of a Magistrate of the third class.

Bogra.

No. 168J.D.—The 13th April 1905.—Babu Pran Mohan Thakur, who has been appointed to be an Honorary Magistrate of the Sadar Independent Bench at Bhagalpur, is vested with the powers of a Magistrate of the third class.

Bhagalpur.

No. 162J.D.—The 14th April 1905.—Babu Kali Kumar Majumdar, who has been appointed to be an Honorary Magistrate of the Ullapara Independent Bench in the district of Pabna, is vested with the powers of a Magistrate of the third class. He is also empowered, under section 357, sub-section (2) of the Code of Criminal Procedure, Act V of 1898, to take down evidence in criminal cases in the English language.

Pabna.

No. 155J.D.—The 15th April 1905.—Babu Purna Chandra Singh and Maulvi Khondkar Abu Tail, who have been appointed to be Honorary Magistrates of the Kandi Independent Bench in the district of Murshidabad, are vested with the powers of a Magistrate of the third class.

Murshidabad.

No. 201J.D.—The 15th April 1905.—Rai Ugyen Gyatsho Bahadur, Manager of the Kalimpong Government Estates in the district of Darjeeling, is vested with the powers of a Magistrate of the third class, and is authorised to sit singly at Kalimpong for the trial of cases.

Darjeeling.

No. 245J.D.—The 15th April 1905.—Babu Chandi Charan Chaudhuri, an Honorary Magistrate of the Independent Bench at Palang, in the district of Faridpur, is vested with the powers of a Magistrate of the second class. He is also authorised to sit singly for the trial of such cases as may be made over to him by the Subdivisional Officer of Madaripur.

Faridpur.

H. W. C. CARNDUFF,
Offg. Secy. to the Govt. of Bengal.

ERRATUM.

No. 3114J.—The 18th April 1905.—In Notification No. 3112J., dated the 6th April 1905, published at page 659, Part I of the *Calcutta Gazette*, dated the 12th idem, *for* "Barasat subdivision" *read* "Barrackpore subdivision."

H. W. C. CARNDUFF,
Offg. Secy. to the Govt. of Bengal.

JUDICIAL DEPARTMENT—(JAILS).

NOTIFICATION.

No. 278J.D.—The 15th April 1905.—The Reverend William Alfred Thomas is re-appointed to be a non-official visitor of the Monghyr Jail, with effect from the 13th May 1905.

Monghyr.

No. 296J.D.—The 15th April 1905.—The undermentioned gentlemen are appointed to be non-official visitors of the Hazaribagh Central Jail :—

Hazaribagh.

1. Raja Ram Narain Singh.
2. Babu Bisvesur Mukherji.
3. „ Gopal Chunder Sen.

H. W. C. CARNDUFF,
Offg. Secy. to the Govt. of Bengal.

NOTIFICATION.

No. 302J.D.—The 15th April 1905.—In exercise of the power vested in him by section 14, sub-section (1) of the Code of Criminal Procedure, 1898, the Lieutenant-Governor is pleased to confer upon each of the under-mentioned Presidents of panchayats in the district of Hooghly the powers of a Magistrate under sections 64, 127 and 128 of the same Code, and to declare that the said powers may be exercised by the said officers within the limits of the unions noted against their respective names.

Hooghly.

2. The Lieutenant-Governor is further pleased to declare, in pursuance of sub-section (2) of the said section 14, that the said powers are conferred and may be exercised by each of the said officers for a period of three years only from the date of this notification :—

Badanganj outpost.

Name of President.				Name of union.
Babu Raja Ram Mukerji	...	...	...	Paschimpara.
„ Ram Gopal Gor	...	...	...	Badanganj.
„ Kunja Behary Ghosh	...	...	...	Fulne Bolebhadrapur.
„ Chandra Nath Roy	...	...	...	Shambasar.

Dadpur outpost.

Babu Jageswar Sing Roy	...	...	...	Makhalpur.
Haji Golam Rahaman	...	...	...	Babnan-Dadpur.
Babu Jogendra Nath Roy	...	...	...	Dadpur.
„ Kali Prosanna Samanta	...	...	...	Satithan.

R. W. CARLYLE,
Offg. Chief Secy. to the Govt. of Bengal.

ERRATUM.

No. 299J.D.—The 15th April 1905.—In the Notification No. 3067J., dated the 1st April 1905, published at pages 617—620, Part I of the *Calcutta Gazette* of the 5th April 1905, conferring upon each of the Presidents of panchayats in the district of Tippera the powers of a Magistrate under sections 64, 127 and 128 of the Code of Criminal Procedure, 1898, *for* "Munshi Wali Ahmad Chaudhri" shown against Union No. XXIII, Saidabad, in thana Kasba, *read* "Munshi Muhammed Asgar."

Tippera.

R. W. CARLYLE,
Offg. Chief Secy. to the Govt. of Beng

PUBLIC WORKS DEPARTMENT.

ESTABLISHMENT.

The 17th April 1905.

No. 94.—Mr. C. A. Marchant, Sub-Engineer, second grade, Brahmini-Byturni Division, held charge of that Division from the afternoon of 5th March to the afternoon of 8th April 1905 in addition to his own duties.

The 18th April 1905.

No. 95.—Babu Mohendra Nath Dutt, Assistant Engineer, Gandak Division, is granted privilege leave for three months, under Article 260 of the Civil Service Regulations, combined with furlough for six months, under Articles 338 (*a*) and 233 (*i*) of the same Regulations, with effect from the 15th May 1905 or such subsequent date as he may avail himself of it.

W. A. INGLIS,
Secy. to the Govt. of Bengal.

MARINE DEPARTMENT.

The 15th April 1905.

No. 49 Marine.—The following Notification by the Government of India is republished for general information.

W. A. INGLIS,
Secy. to the Govt. of Bengal.

No. 965C, dated Simla, the 6th April 1905.

NOTIFICATION—By the Government of India, Department of Commerce and Industry.

IN exercise of the powers conferred by section 8 of the Indian Petroleum Act, 1899 (VIII of 1899), the Governor-General in Council is pleased to direct that to the rule to regulate the transport of petroleum from one province of British India to any other, published with the notification of the Government of India in the Home Department No. 1795, dated the 12th December 1902, the brackets, figures and words "(1) Save as otherwise provided in sub-rule (2)" be prefixed and the following sub-rule shall be added, namely:—

"(2) Nothing in sub-rule (1) shall be deemed to limit or otherwise affect the exercise, for the due enforcement of the rules rendered applicable by the said sub-rule, of any powers of inspecting or detaining petroleum in transport, which may be exerciseable by any Magistrate or Police Officer under any rules for the time being in force under the Indian Petroleum Act, 1899 (VIII of 1899), in the province within which the petroleum is being transported."

The 15th April 1905.

No. 50 Marine.—Mr. H. Ancell, Mate Pilot, is appointed to act as a Junior Master Pilot, with effect from the date he is put on the running list.

W. A. INGLIS,
Secy. to the Govt. of Bengal.

The 18th April 1905.

No. 51 Marine.—Mr. J. Sherman, Branch Pilot, is granted, under article 676 (*a*) of the Civil Service Regulations, privilege leave for 23 days, with effect from the 8th April 1905.

W. A. INGLIS,
Secy. to the Govt. of Bengal.

PUBLIC WORKS DEPARTMENT.

ESTABLISHMENT.

The 17th April 1905.

No 93.—The following promotions are made in the Upper Subordinate Establishment, with effect from the dates specified:—

Name.	From	To	With effect from	Nature of promotion.	Division in which employed
Dutt, Soshi Bhusan	Supervisor, 1st grade (Supernumerary)	Sub-Engineer, 3rd grade (Supernumerary).	14th February 1905.	Permanent	District Board, Tippera.
Khastigir, Satya Ranjan.	Supervisor, 2nd grade (Supernumerary).	Supervisor, 1st grade (Supernumerary).	14th February 1905.	Ditto ...	District Board, Balasore
Banerjee, Bhusan Chandra	Supervisor, 1st grade	Sub-Engineer, 3rd grade.	16th March 1905.	Temporary	Rajshahi.
Bhattacherjee, Surendro Nath	Supervisor, 2nd grade	Supervisor, 1st grade.	16th March 1905.	Ditto ...	Cossye.
De, Nanda Lal	Overseer, 1st grade	Supervisor, 2nd grade	14th February 1905.	Ditto ...	1st Calcutta.
Mullick, Phani Lal	Ditto ...	Ditto ...	3rd March 1905	Ditto ...	Arrah.
Mozumdar, Kedar Nath	Ditto ...	Ditto ...	16th March 1905.	Ditto ..	Balasore.

W. A. INGLIS,
Chief Engineer.

ESTABLISHMENT.

The 15th April 1905.

No. 92.—Babu Nanda Lal De, Supervisor, second grade, temporary rank, attached to the 1st Calcutta Division and employed in the Drawing Branch of the Chief Engineer's Office, is granted privilege leave for two months, under article 260 of the Civil Service Regulations, with effect from the forenoon of the 17th April 1905.

M. J. SCOBIE,
Offg. Chief Engineer.

SUBORDINATE CIVIL SERVICE.

No. 2824A.

No. 36A.D.—The 11th April 1905.—Babu Bhuban Mohan Chatterji, Sub-Deputy Collector, is posted to the Dacca Division on being relieved of his settlement duties in the Ranchi district, and is vested with the powers of a Magistrate of the second class.

Ranchi.
Dacca Divn.

No. 61A.D.—The 13th April 1905.—Babu Susil Kumar Ghose, substantive *pro tempore* Sub-Deputy Collector, 24-Parganas, is allowed leave for six weeks, under article 260 of the Civil Service Regulations, with effect from the 1st March 1905.

24-Parganas.

No. 64A.D.—The 13th April 1905.—Under the authority vested in him by section 357, sub-section (2), of the Code of Criminal Procedure, Act V of 1898, the Lieutenant-Governor empowers Babu Radica Mohan Basak, substantive *pro tempore* Sub-Deputy Magistrate, Gopalganj, Saran, to take down evidence in criminal cases in the English language.

Saran.

No. 76A.D.—The 14th April 1905.—Under the authority vested in him by section 357, sub-section (2), of the Code of Criminal Procedure, Act V of 1898, the Lieutenant-Governor empowers Babu Rebati Nath Chatterjee, substantive *pro tempore* Sub-Deputy Magistrate, Howrah, to take down evidence in criminal cases in the English language.

Howrah.

No. 86A.D.—The 14th April 1905.—Babu Krishna Chandra Ghose, substantive *pro tempore* Sub-Deputy Collector, Orissa Division, is posted to the head-quarters station of the district of Cuttack.

Cuttack.

No. 196A.D.—The 15th April 1905.—Maulvi Muhammad Choinuddin, Sub-Deputy Collector, is posted to the Lalbagh subdivision of the Murshidabad district. He is vested with the powers of a Magistrate of the second class.

Murshidabad.

No. 210A.D.—The 17th April 1905.—Babu Manindra Nath Basu, substantive *pro tempore* Sub-Deputy Collector, Chota Nagpur Division, is posted to the head-quarters station of the Manbhum district.

Manbhum.

No. 212A.D.—The 17th April 1905.—Under the authority vested in him by section 357, sub-section (2), of the Code of Criminal Procedure, Act V of 1898, the Lieutenant-Governor empowers Babu Jyoti Prosad Das, substantive *pro tempore* Sub-Deputy Magistrate, Ranchi, to take down evidence in criminal cases in the English language.

Ranchi.

No. 216A.D.—The 17th April 1905.—Babu Sushil Chandra Ghose, substantive *pro tempore* Sub-Deputy Collector, Presidency Division, is posted to the head-quarters station of the Nadia district.

Nadia.

No. 220A.D.—The 17th April 1905.—Babu Makunda Lal Ganguli, substantive *pro tempore* Sub-Deputy Collector, Rajshahi Division, is posted to the head-quarters station of the Dinajpur district.

Dinajpur.

No. 233A.D.—The 17th April 1905.—Under the authority vested in him by section 357, sub-section (2), of the Code of Criminal Procedure, Act V of 1898, the Lieutenant-Governor empowers Maulvi Mohamad Sahabuddin Khan, substantive *pro tempore* Sub-Deputy Magistrate, Bhagalpur, to take down evidence in criminal cases in the English language.

Bhagalpur.

R. W. CARLYLE,
Offg. Chief Secy. to the Govt. of Bengal.

REGISTRATION DEPARTMENT.

NOTIFICATIONS.

No. 14P.D.—The 11th April 1905.—Maulvi Fazlul Qadir, Joint-Sub-Registrar of Satkania at Adhunagar, in the district of Chittagong, is appointed to be Rural Sub-Registrar of Satkania, in the same district.

Chittagong.

No. 15P.D.—The 11th April 1905.—Babu Ashutosh Das, Joint-Sub-Registrar of Phatikchari at Kazirhat, in the district of Chittagong, is appointed to be Joint-Sub-Registrar of Satkania at Adhunagar, in the same district.

Chittagong.

No. 16P.D.—The 11th April 1905 —Babu Pran Krishna Das, Joint-Sub-Registrar of Cox's Bazar at Chakiria, in the district of Chittagong, is appointed to be Joint-Sub-Registrar of Phatikchari at Kazirhat, in the same district.

Chittagong.

No. 17P.D.—The 11th April 1905.—Mr. A. Penheiro is appointed to be Joint-Sub-Registrar of Cox's Bazar at Chakiria, in the district of Chittagong.

Chittagong.

R. W. CARLYLE,
Offg. Chief Secy. to the Govt. of Bengal.

JAIL DEPARTMENT.

No. 4047, dated Calcutta, the 12th April 1905.—Senior Assistant Surgeon Rai Guru Charan Das Gupta Bahadur made over medical charge of the Buxar Central Jail to Major E. R. Parry, I.M.S, on the forenoon of the 23rd March 1905.

No. 4068, dated Calcutta, the 12th April 1905.—Dr. R. H. Pulipaka made over charge of the Khulna Jail to Deputy Magistrate Atul Chandra Kar on the forenoon of the 5th April 1905.

No. 4048, dated Calcutta, the 14th April 1905.—Major E. R. Parry, I.M.S., took over charge of the Buxar Central Jail from the Deputy Superintendent on the forenoon of the 23rd March 1905.

No. 4213, dated Calcutta, the 18th April 1905.—Captain A. W. R. Cochrane, I.M.S., made over charge of the Chittagong Jail to Captain E. O. Thurston, I.M.S., on the afternoon of the 21st March 1905.

M. S. EMERSON,
for *Inspector-General of Prisons, Bengal.*

CIVIL MEDICAL DEPARTMENT, BENGAL.

No. 5D., dated Darjeeling, the 10th April 1905.—Third grade Assistant Surgeon Bepin Chandra Das Gupta is appointed to do supernumerary duty at the Medical College Hospital, Calcutta, until further orders, with effect from the forenoon of the 2nd April 1905.

No. 12D., dated Darjeeling, the 11th April 1905.—First grade Assistant Surgeon Gopal Chunder Chatterjee, Teacher of Anatomy and Surgery, Dacca Medical School, is allowed privilege leave for forty-five days, under article 260, Civil Service Regulations, with effect from the 1st May 1905 or any subsequent date on which he is relieved of his duties.

S. H. BROWNE, M.D., COL., I.M.S.,
Inspector-General of Civil Hospitals, Bengal.

TREASURY NOTICE.

UNCOVENANTED DEPUTY COLLECTOR BABU NABIN CHANDRA DAW has been placed in charge of the Dinajpur Treasury and authorized to draw bills on other Treasuries.

MANADA RANJAN SEN, *Personal Assistant*, for *Commissioner.*

COMMR.'S OFFICE, RAJSHAHI DIVN., JALPAIGURI, *the 11th April 1905.*

Sheriff's Office, the 15th March 1905.

NOTICE is hereby given that the Second Criminal Sessions of the year 1905 of the High Court of Judicature at Fort William in Bengal, for the Town of Calcutta and Factory of Fort William, and the places subordinate thereto, will be held at the Court-house, in the Town of Calcutta, on Wednesday, the third day of May next, at 11 o'clock in the forenoon, and thenceforward from day to day until the said Sessions be over. And it is hereby proclaimed that all persons who are to prosecute any of the prisoners to be brought up for trial at the said Sessions be present then and there to prosecute.

E. CABLE, *Sheriff.*

সরিফ আকিল, সন ১৯০৫ সাল তারিখ ১৫ই মার্চ্চ।

সকলকে সমাচার দেওয়া যাইতেছে যে হুবে বাঙ্গালার কোর্ট উইলিয়ম দুর্গের অধীন শহর কলিকাতার ও অন্যান্য স্থানের ফৌজদারী বিচার নিষ্পত্তি জন্য আগামী সন ১৯০৫ সালের ৩রা মে বুধবার বেলা ১১ ঘটিকার সময় এবং যে পর্য্যন্ত সেশিয়ানের কার্য্য শেষ না হয় প্রতিদিন উক্ত সময়ে কলিকাতার হাইকোর্টের আপন আদালত ঘরে সন ১৯০৫ সালের দ্বিতীয় ক্রিমিনেল সেশিয়ান বসিবেক এবং এতদ্দ্বারা প্রচার করা যাইতেছে যে, যে সকল ব্যক্তি কোন কয়েদির বিরুদ্ধে ফৌজদারী মিছিল করিবেক তাহারা উক্ত স্থানে উক্ত সময়ে হাজির থাকিয়া মোকদ্দমা করে ইতি।

ই: কেবল, সরিফ।

SMALL CAUSE COURT NOTICE

NOTICE is hereby given under section 7 of Act IX of 1887, that the Judge of the Courts of Small Causes at Dacca and Munshigunge, will, in the month of May 1905, sit in those Courts on the undermentioned dates, Sundays and holidays excepted:—

Dacca Small Cause Court—2nd, 6th, 9th, 13th, and 29th of May 1905.

Munshiganj Small Cause Court—from the 19th to the 27th of May 1905.

SRI GOPAL CHATTERJI, *Judge, Small Cause Court.*

DACCA SMALL CAUSE COURT, *the 10th April 1905.*

EDUCATION DEPARTMENT, BENGAL.

Subordinate Educational Service.

The 14th April 1905.—Babu Basanta Kumar Mitra, B.A. Assistant Head Master, Faridpur Zilla School (class VI), was absent on leave for seven days under Article 336 of the Civil Service Regulations with effect from the 23rd March 1905.

Maulvi Muhammad Sulaiman, B.A. Deputy Inspector of Schools, Backergunge (class III), is allowed leave of absence for two months and fifteen days under Article 260 of the Civil Service Regulations with effect from the 15th May 1905 or any subsequent date on which he may avail himself of it.

Babu Barada Prasad Sarkar, Additional Deputy Inspector of Schools, Backergunge (class IV), is appointed to act as Deputy Inspector of Schools, Backergunge, during the absence, on leave, of Maulvi Muhammad Sulaiman, or until further orders.

Maulvi Zakiuddin Ahmed, B.A., Sub-Inspector of Schools, Backergunge, is appointed, subject to the consent of the District Board, to act as Additional Deputy Inspector of Schools, Backergunge, and in class IV of the Subordinate Educational Service, *vice* Babu Barada Prasad Sarkar, on deputation.

The 15th April 1905.—Babu Hira Lal Pal, B.A., Deputy Inspector of Schools, Burdwan (class I), is allowed leave of absence for one month and twenty-eight days under Article 260 of the Civil Service Regulations with effect from the 15th March 1905.

Maulvi Hurmutulla, Additional Deputy Inspector of Schools, Burdwan (class VII), is appointed to act as Deputy Inspector of Schools, Burdwan, during the absence, on leave, of Babu Hira Lal Pal, or until further orders

Babu Umesh Chandra Bose, Sadar Sub-Inspector of Schools, Burdwan, is appointed, subject to the consent of the District Board, to act as Additional Deputy Inspector of Schools, Burdwan, and in class VII of the Subordinate Educational Service, *vice* Maulvi Hurmutulla on deputation.

Babu Umesh Chandra Chatterjee, Cashier, Presidency College (class V), is allowed leave of absence for three months under Article 260 of the Civil Service Regulations with effect from the 8th March 1905.

Babu Atul Krishna Chatterjee, Accountant, Presidency College (substantively *pro tempore* in class VIII), is appointed to act as Cashier, Presidency College, during the absence, on leave, of Babu Umesh Chandra Chatterjee, or until further orders.

Babu Chuni Lal Mitra, a clerk in the Presidency College on a salary Rs. 25 a month, is appointed to act as Accountant, Presidency College, and in class VIII of the Subordinate Educational Service, *vice* Babu Atul Krishna Chatterjee, on deputation.

The 17th April 1905.—The following revised arrangements are sanctioned:—

(1) Babu Bireswar Das B.A., Assistant Head Master, Bankura Zilla School, under orders of transfer to the Uttarpara Government School (class VI), to be Assistant Head Master of the Malda Zilla School, *vice* Maulvi Elah Nowaz Khan, resigned.

(2) Babu Nilmadhab Barik, B.A., an Assistant Master in the Bankura Zilla School (class VI), to be Assistant Head Master of the same institution, *vice* Babu Bireswar Das, transferred.

(3) Babu Uma Charan Mitra, an Assistant Master in the Uttarpara Government School, on leave (class VIII), to be an Assistant Master in the Bankura Zilla School, *vice* Babu Nilmadhab Barik, promoted.

(4) Babu Sidheswar Ganguli, M.A., Assistant Head Master of the Hooghly Collegiate School, under orders of transfer as Assistant Head Master of the Malda Zilla School (class VI), to be Assistant Head Master of the Uttarpara Government School.

Babu Kamala Prasad, B.A., Sub-Inspector of Schools, Sonthal Parganas (class VIII), is allowed leave of absence for thirty-four days under Article 260 of the Civil Service Regulations with effect from the 13th May 1905, or any subsequent date on which he may avail himself of it.

Pandit Hriday Nath Tarkaratna, an Assistant Master (Pandit) in the Rangpur Training School (class VI), was absent, on leave, for twenty-five days under article 271 of the Civil Service Regulations, with effect from the 8th March 1905.

A. PEDLER,
Director of Public Instruction, Bengal.

Results of the Overseer Examinations of the Bihar School of Engineering, 1905.

FIRST DIVISION.
(In order of merit.)

Chhatri Lal.
Ram Pratab Prasad.

SECOND DIVISION.

Ram Niranjan Singh.
Bisheshwar Dayal.
Jitendra Nath Dey.
Akhouri Mahabir Prasad.

THIRD DIVISION.

Asrar Ahmad.
Biswa Nath Tewari.
Abinas Chandra Das.

Results of the Sub-Overseer Examination of the Bihar School of Engineering, 1905.

FIRST DIVISION.

Probodh Chandra Ghosh.
Banke Bahadur.
Matin Ahmad Siddiq.
Thakur Prasad.

SECOND DIVISION.

Probodh Chandra Mittra.
Rajib Nayan Kumar.
Banwari Singh.
Banwari Nandan.
Ram Chandra Prasad.
Krishna Kamal Singh.
Kamakhaya Charan Mozamdar.
Charu Gopal Mozamdar.

THIRD DIVISION.

Baidya Nath Mukerji.
Syed Moazur Rub.
Surendra Nath Mukerji.

ENGLISH TEACHERSHIP EXAMINATION, 1905.

THE following candidates have passed:—

First grade.
(In order of merit.)

		Centre.
1.	Jagadish Chandra Sen Gupta, B.A.	Calcutta.
2.	Banwari Lal Pal	Ditto.
3.	Mathura Nath Mandal, M.A.	Ditto.

Second grade.
(In order of merit.)

4.	Hari Charan Mukerjee	Calcutta.
5.	Upendra Nath Banerjee	Ditto.

CALCUTTA,
The 11th April 1905.

V. H. JACKSON,
Asst. Director of Public Instruction, Bengal

VERNACULAR MASTERSHIP EXAMINATION, 1905.

Presidency, Burdwan, Dacca, Chittagong, and Rajshahi Divisions.

THE undermentioned candidates have passed the Examination:—

FIRST GRADE.

High.

(In order of merit.)

No.	NAME	Age.	Training School.	
1	Subal Chandra De* ...	24-0	Chittagong Training School.	
2-3	Pitambar Nath* ...	19-0	Dacca	ditto.
	Bamandas Banerji* ...	19-0	Calcutta	ditto.
4	Mukunda Chandra Rais ...	18-0	Do.	ditto.
5	Nibaran Chandra Sanyal ...	14-7	Rangpur	ditto.
6	Janaki Nath Hati ...	20-0	Calcutta	ditto.
7-8	Surendra Kumar Das* ...	16-0	Dacca	ditto.
	Duryodhan Barua ...	21-6	Chittagong	ditto.
9	Baranasi Bhattacharjya* ...	17-5	Hooghly	ditto.
10	Phelaram Banerji ...	16-8	Do.	ditto.
11	Giris Chandra Pal ...	20-0	Chittagong	ditto.
12	Nibaran Chandra Pal ...	18-5	Hooghly	ditto.
13	Sarvadas Acharya* ...	16-5	Do.	ditto.
14	Chandi Charan Ta ...	17-0	Calcutta	ditto.
15	Makhan Lal Das ...	17-5	Rangpur	ditto.
16	Jatindra Nath Ray Chaudhuri.	18-0	Calcutta	ditto.
17	Chinta Mani Panda ...	16-0	Do.	ditto.
18	Ras Bihari Ray* ...	14-0	Dacca	ditto.
19	Mukunda Chandra Gautam	18-0	Hooghly	ditto.
20	Sripati Mohan Banerji ...	17-5	Do	ditto.
21	Mahendra Nath Das ...	19-8	Rangpur	ditto.
22	Mahendra Lal Nandi*† ...	20-0	Chittagong	ditto.
23	Ramapati Mukherji ...	21-8	Hooghly	ditto.
24	Satis Chandra Purkait ...	18-0	Calcutta	ditto.
25	Charu Chandra Samanta ...	19-0	Hooghly	ditto.
26	Padmanabha Das ...	19-5	Do.	ditto.
27	Raksha Hari Das ...	17-3	Do.	ditto.
28	Bijan Bihari Chatterji ...	17-8	Do.	ditto.
29	Hara Chandra De ...	17-0	Dacca	ditto.
30	Ras Bihari Banerji ...	17-8	Hooghly	ditto.

Medium.

1	Nilmani Mahana ...	16-8	Hooghly Training School.	
2	Bhola Nath Ray ...	16-8	Do.	ditto.
3	Radha Govinda Acharya ...	20-8	Do.	ditto.
4	Guru Prasad Majumdar ...	19-0	Chittagong	ditto.
5	Bipin Chandra Nag ...	20-0	Do.	ditto.
6	Haripada Mandal ...	18-0	Calcutta	ditto.
7	Narendra Nath Rai ...	19-0	Hooghly	ditto.
8	Hrishikes Misra ...	16-6	Do.	ditto.
9	Purna Chandra Chakravarti	22-0	Calcutta	ditto.
10	Radha Syam Barma ...	21-0	Do.	ditto.
11	Manmatha Nath Acharya	20-0	Hooghly	ditto.
12	Pramatha Nath Mitra ...	18-0	Calcutta	ditto.
13	Kalipada Mukherji ...	18-8	Hooghly	ditto.
14	Sita Nath Haldar ...	21-0	Calcutta	ditto.
15	Krishna Kinkar Das* ...	19-5	Hooghly	ditto.
16	Srinandan Das ...	18-5	Do.	ditto.
17	Bipin Bihari Sarkar ...	20-0	Dacca	ditto.
18	Mahes Chandra Nandi* ...	21-0	Do.	ditto.
19	Ayin Uddin Pramanik ...	15-9	Rangpur	ditto.
20	Rajani Kumar Nath† ...	17-6	Chittagong	ditto.
21	Abdul Jabbar Mandal ...	15-8	Rangpur	ditto.

* Entitled to special certificates in Drawing and Practical Geometry.
† Candidates other than those whose names are marked with dagger have passed in Manual work.

Medium—concld.

No.	Name.	Age.	Training School.	
22	Gaurpada Chaudhuri* ...	18-0	Hooghly Training School.	
23	Rampada Chaudhuri ...	17-5	Do.	ditto.
24	Jatindra Mohan Mukherji	19-8	Do.	ditto.
25	Jatindra Nath Pal ...	18-0	Calcutta	ditto.
26	Khezar Uddin Sarkar ...	17-3	Rangpur	ditto.
27	Kamdev Maiti ...	20-0	Calcutta	ditto.
28	Mahes Chandra De ...	18-9	Dacca	ditto
29	Kader Bux Biswas ...	23-8	Rangpur	ditto.
30	Bhaba Narayan Sardar ...	19-0	Calcutta	ditto.
31	Bhut Nath Maiti ...	18-0	Do.	ditto.
32	Jatindra Nath Samanta ...	18-0	Hooghly	ditto.
33	Aswini Kumar Chakravarti (I).	15-0	Dacca	ditto.
34	Abdul Majid Mandal ...	17-8	Rangpur	ditto.
35	Bhushan Chandra Ghosh ...	19-8	Hooghly	ditto.
36	Surya Kumar Chatterji ...	18-0	Calcutta	ditto.
37	Chandra Mohan Mandal ...	17-0	Do.	ditto.
38	Priya Nath Khatua ...	18-5	Hooghly	ditto.
39	Ratanlal Mandal ...	20-0	Krishnagar	ditto.
40	Moyezuddin Mandal* ...	19-6	Rangpur	ditto.
41	Jatindra Mohan Bhattacharya.†	25-0	Private (Hooghly).	
42	Sarat Chandra Sarkar ...	16-8	Hooghly Training School.	
43	Bibhuti Bhushan Haldar ...	26-0	Calcutta	ditto.
44	Probodh Kumar Mullik ...	20-0	Krishnagar	ditto.
to	Masiruddin Khan ...	21-9	Rangpur	ditto.
46	Ramdas Sarkar ...	19-9	Do.	ditto.
47	Bhupendra Nath Misra ...	17-0	Calcutta	ditto.
48	Faratulla Muhammad ...	17-8	Rangpur	ditto.
49	Khudiram Ray ...	18-8	Hooghly	ditto.
50	Kshirod Kumar Maiti ...	21-0	Calcutta	ditto.
51	Param Chandra Pal ...	16-0	Dacca	ditto.
52	Syama Charan Bhattacharya†.	20-0	Chittagong	ditto.
53	Sita Nath Saha ...	23-0	Private (Dacca).	
54	Bhuban Chandra Maiti ...	21-0	Calcutta Training School.	
55	Sajani Kanta Das ...	18-8	Hooghly	ditto.
56	Aswini Kumar Das ...	19-0	Dacca	ditto.
57	Dharanidhar Karmakar ...	17-0	Calcutta	ditto.
58	Sripati Charan Chaudhuri ...	17-0	Do.	ditto.
59	Akhil Chandra Haldar ...	19-0	Dacca	ditto.
60	Bhupati Bhushan Samanta	17-8	Hooghly	ditto.
61	Abdul Jalil Afrad ...	16-0	Dacca	ditto.
62	Asutosh Chaudhuri† ...	18-0	Chittagong	ditto.
63	Sarada Charan Ray ...	20-0	Calcutta	ditto.
64	Rajmohan Pal ...	18-0	Dacca	ditto.
65	Damodar Mukherji ...	18-8	Hooghly	ditto.
66	Kshetra Nath Banerji ...	18-5	Calcutta	ditto.

Low.

1	Srimantalal Das ...	19-5	Hooghly Training School.	
2	Prasanna Kumar De* ...	16-0	Dacca	ditto.
3	Kamini Ranjan Hore ...	20-0	Chittagong	ditto.
4	Giris Chandra Maiti ...	22-0	Calcutta	ditto.
5	Wab Mia Sikdar† ...	20-0	Chittagong	ditto.
6	Ramani Kumar Chaki* ...	17-8	Rangpur	ditto.
7	Kalikanta Chakravarti ...	19-0	Dacca	ditto.
8	Radha Ballabh Karmakar...	18-8	Hooghly	ditto.
9	Sadat Ali ...	18-0	Dacca	ditto.
10	Sasadhar Mandal ...	17-0	Calcutta	ditto.
11	Khosrab Uddin Biswas ...	18-0	Hooghly	ditto.
12	Jugul Kisor Thakur ...	19-8	Do.	ditto.
13	Bhutnath Chatterji ...	20-5	Do.	ditto.

* Entitled to special certificates in Drawing and Practical Geometry.
† Candidates other than those whose names are marked with dagger have passed in Manual work.

Candidates already passed in the old Course and taking up one or more new subjects.

FIRST GRADE.

Science, Art of Teaching and Kindergarten, Drawing, Drill and Manual work.

No.	NAME.	Age.	Training School.
	Raj Krishna Das	...	Calcutta (Private).

Art of Teaching and Kindergarten, Drawing, Drill and Manual work.

	Prasanna Coomar Mojumdar	22-0	Chittagong (Private).

Art of Teaching and Kindergarten, Drill and Manual work.

	Sarat Chandra Bhaumik ...	29-0	Chittagong (Private).
	Govinda Chandra Acharji ...	25-9	Rangpur do.
	Sudarsan Chandra Biswas ...	...	Hooghly do.
	Hari Prasanna Chaudhuri	31-0	Do. do.

Art of Teaching and Kindergarten, Science, Drill and Manual work.

	Aswini Kumar Nag ...	23-0	Dacca (Private).
	Ras Mohan Nath ...	35-0	Do. do.

Drawing and Practical Geometry.

	Bazler Rahman Mia ...	28-0	Rangpur (Private).
	Sarat Chandra Das ...	19-0	Calcutta do.

Drawing and Practical Geometry and Drill.

	Raj Koomar De ...	34-0	Chittagong (Private).

Science, Drill and Manual works.

	Ramani Kanta Das		Calcutta (Private).

Manual Work.

	Srinath Chandra Maiti		Calcutta (Private).

SECOND GRADE.

High.

1	Sripati Bhattacharja ...	18-3	Rangpur Training School.
2	Sasibhusan Das ...	17-11	Hooghly ditto.
3	Nareswar Sarma ...	21-5	Rangpur ditto.
4	Kalipada Majilsa ...	15-11	Hooghly ditto.
5	Khondker Fazle Karim ...	22-0	Dacca ditto.
6	Golam Khaibar Khondkar	15-9	Rangpur ditto.
7	Phelaram Mohanta ...	15-8	Hooghly ditto.
8	Raksha Chandra Pal ...	18-11	Do. ditto.
9	Kali Prasanna Mozoomdar	17-0	Chittagong ditto.
10	Sisupati De	18-5	Hooghly ditto.
11	Purna Chander Pandit ...	21-0	Chittagong ditto.
12	Govinda Chander Manji ...	17-0	Calcutta ditto.
13	Syama Churn Chowdhuri ...	17-0	Chittagong ditto.
14	Mahendra Nath Das ...	18-0	Calcutta ditto.
15	Monomohan Kanangoe ...	20-0	Chittagong ditto.
16	Bepin Behari Das ...	16-11	Hooghly ditto.
17	Radhika Prosad Mukerjee	15-11	Do. ditto.
18	Chintamoni Gupta ...	15-11	Do. ditto.
to	Prasanna Coomar Das ...	23-9	Rangpur ditto.
20	Rahimuddin Sarkar ...	16-4	Do. ditto.
21	Pratap Chandra Sarkar ...	15-5	Hooghly ditto.
22	Karim Bux	20-0	Chittagong ditto.
23	Kasi Waizuddin Ahmed ...	22-0	Do. ditto.
24	Bejoy Krishna Baidya ...	20-0	Calcutta ditto.
25	Monomohan Chowdhuri ...	17-6	Chittagong ditto.
26	Sahiruddin Pramanik ...	19-9	Rangpur ditto.
27	Nim Kanta Biswas ...	22-0	Calcutta ditto.
28	Basiruddin Sarkar ...	15-3	Rangpur ditto.
29	Nagendra Nath Haldar ...	18-0	Calcutta ditto.
30	Dakshina Ranjan Chatterjee	18-11	Hooghly ditto.
31	Iswar Chandra Maiti ...	24-0	Calcutta ditto.

SECOND GRADE.—*concld.*

Medium.

No.	NAME.	Age.	Training School.
1	Kunchil Chandra Banerjee	21-0	Private (Calcutta).
2	Rasik Lal Pattak	16-8	Dacca Training School.
3	Kalika Prasad Chackravarti	26-8	Do. ditto.
4	Rohini Kanta Sarkar ...	15-9	Rangpur ditto.
5 to 8	Bhupati Bhusan Ruj ...	17-5	Hooghly ditto.
	Tejendra Kumar Chowdhuri	18-0	Chittagong ditto.
	Jabed Ali Khan ...	14-4	Rangpur ditto.
	Gaur Mohan Nayak ...	18-0	Calcutta ditto.
9	Purna Chandra Chatterjee	17-8	Hooghly ditto.
10	Priya Nath Mandal ...	20-0	Krishnagar ditto.
11	Kalipada Sarkar ...	19-0	Calcutta ditto.
12	Jagat Chandra De ...	21-8	Dacca ditto.
13	Hrishikesh Chattoraj ...	17-11	Hooghly ditto.
14	Kashipati Panja ...	15-11	Do. ditto.
15	Badshah Mia ...	14-4	Dacca ditto.
16	Nalini Kanta Chowdhuri ...	18-0	Calcutta ditto.
17	Basaki Nath Gorai ...	16-7	Hooghly ditto.
18	Rajani Mohan Chakravarti	15-11	Rangpur ditto.
19	Mahammad Maizar Rahaman.	17-8	Hooghly ditto.
20	Girish Chandra Das ...	19-0	Calcutta ditto.
21	Chandi Charan Roy ...	17-0	Do. ditto.
22 to 24	Mrittunjoy Mandal ...	19-0	Do. ditto.
	Sambhu Nath Mukerjee ...	18-0	Do. ditto.
	Gangadhar Das ...	17-2	Rangpur ditto.
25	Govinda Chandra Maiti† ...	31-0	Private (Calcutta).
26	Rajkumar Chackravarti ...	17-3	Dacca Training School.
27	Haladhar Pal ...	16-0	Dacca ditto.
28	Arjuna Chandra Das ...	17-0	Chittagong ditto.
29	Nanda Lal Roy ...	18-0	Calcutta ditto.
30	Purna Chander Banerjee	17-8	Hooghly ditto.
31 to 33	Mati Lal Kundu ...	20-8	Do. ditto.
	Rasik Chandra Bhadra ...	20-0	Calcutta ditto.
	Beni Madhab Manna ...	18-0	Do. ditto.
34	Kali Prasad Jana ...	19-0	Do. ditto.
35 to 39	Gopal Chandra Khan† ...	19-5	Hooghly ditto.
	Abdul Aziz Munsi ...	19-0	Dacca ditto.
	Dharani Dhar Boal ...	16-0	Calcutta ditto.
	Baikuntha Nath Das ...	20-0	Do. ditto.
	Rukmini Kanta Das ...	19-0	Do. ditto.
40	Abinas Chander Sinha ...	16-0	Do. ditto.
41	Sarat Chander Nandi ...	19-0	Chittagong ditto.
42	Mukunda Lal Mookerjee ...	18-0	Hooghly ditto.
43	Sahadev Chandra Das	17-3	Dacca ditto.
44 to 46	Kamini Mohan Chackravarti	13-9	Do. ditto.
	Suresh Chandra Jas (II)...	17-3	Hooghly ditto.
	Rajkishore Pandit ...	17-0	Dacca ditto.
47	Charu Chandra Mukerjee ...	...	Private (Calcutta).
48	Raghu Nath Pal ...	19-0	Calcutta Training School.
49	Raj Giri Ghose ...	19-9	Rangpur ditto.
50	Rasaraj Majumdar ...	17-11	Hooghly ditto.
51	Nalinaksha Ghosh ...	17-8	Do. ditto.
52	Sheikh Gulzar Hussain ...	16-9	Rangpur ditto.
53	Gopal Kisku	17-0	Krishnagar ditto.
54	Kshudiram Acharjya ...	17-0	Calcutta ditto.
55 to 58	Gopal Chander Das † ...	19-0	Do. ditto.
	Sital Chander Pal † ...	19-0	Private (Calcutta).
	Jogendra Nath Goha ...	17-0	Calcutta Training School.
	Sherifutulla Akanda ...	18-7	Rangpur ditto.
59	Kashim Uddin Ahmed ...	15-9	Do. ditto.
60 to 62	Abhoy Churn Guha ...	19-0	Calcutta ditto.
	Gopal Chunder Mukerjee ...	18-0	Do. ditto.
	Rohini Kumar Bhaumik ...	20-0	Chittagong ditto.
63 to 65	Kala Chand Maiti ...	17-0	Calcutta ditto.
	Kamalakanta Sarkar ...	17-11	Hooghly ditto.
	Aman Ulla	14-4	Rangpur ditto.
66	Lalit Kumar De ...	19-0	Calcutta ditto.

† Candidates other than those, whose names are marked with dagger have passed in Manual work.

SECOND GRADE—*contd.*

Medium—contd.

No.	NAME.	Age.	Training School.
67	Moyenuddin Mandal ...	17-9	Rangpur Training School.
68	Guna Sindhu Naskar ...	16-0	Calcutta ditto.
69	Kamaluddin Ahmad ...	19-3	Rangpur ditto.
70	Mahammad Ebadulla ...	21-0	Dacca ditto.
71	Safat Ali Munsi ...	15-3	Rangpur ditto.
72	Lalit Mohan Chatterjee ...	16-11	Hooghly ditto.
73	Din Dayal Nandi ...	19-0	Calcutta ditto.
74	Girindra Nath Biswas ...	16-0	Krishnagar ditto.
75	Bipin Chander Saha ...	16-0	Dacca ditto.
76	Paban Chander Das ...	17-9	Rangpur ditto.
77	Dharani Dhar Maiti ...	20-0	Calcutta ditto.
to	Abul Hossein Khan ...	15-0	Dacca ditto.
79	Sayed Jharu Mia ...	18-8	Hooghly ditto.
80	Hrishikesh Bhandari ...	17-0	Calcutta ditto.
81	Bibhuti Bhusan Sarkar ...	16 11	Hooghly ditto.
82	Hem Chandra Jana ...	16-0	Calcutta ditto.
83	Abbas Ali	16-0	Chittagong ditto.
84	Saaibhusan Mukerjee ...	23-0	Calcutta ditto.
85	Khodadad Mia ...	16-11	Hooghly ditto.
86	Parameswar Das Adak ...	17-0	Calcutta ditto.
87	Rajani Mohan Roy ...	17-10	Rangpur ditto.
88	Indra Kumar De ...	18-0	Dacca ditto.
89	Indra Narayan Jana ...	17-0	Calcutta ditto.
90	Farman Ali	15-9	Dacca ditto.
91	Sribas Das	16-11	Hooghly ditto.
92	Atul Chunder De ...	17-0	Calcutta ditto.
93	Bhutnath Mandal ...	16-11	Hooghly ditto.
94	Abdul Samad Khan ...	18-0	Dacca ditto.
95	Satish Chandra Nandi ...	16-0	Chittagong ditto.
96	Brajendra Kishore Kar ...	19-6	Private (Dacca).
97	Kshetra Nath Das†	22-0	Calcutta Training School
98	Rash Behari Chakravarti ...	17-3	Dacca ditto.
99	Debendra Nath Sahu ...	19-0	Calcutta ditto.
100	Parvati Charan Mandal ...	23-0	Private (Calcutta).
101	Gokul Chandra Kar ...	17-2	Dacca Training School.
102	Nanda Kumar Saha ...	17-8	Do. ditto.
103	Nayan Chand Mullick ...	24-9	Calcutta ditto.
104	Ramgati Roy	18-0	Do. ditto.
105	Sarif Uddin	18-9	Rangpur ditto.
106	Banamali Bar ...	20-0	Dacca ditto.
107	Sarbesh Ali Akanda ...	17-0	Rangpur (Private).
108	Baman Das Ghosh ...	17-0	Calcutta Training School.
109	Kumarish Chandra Ghosal†	19 0	Do. ditto.
to	Nagendra Nath Majumdar†	17-0	Do. ditto.
111	Ram Chandra Kar ...	17-0	Dacca ditto.
112	Indra Narayan Banerjee ...	16-11	Hooghly ditto.
113	Ashutosh Buxi ...	19-0	Calcutta ditto.
114	Bhabataran Mukerjee ...	18-0	Do. ditto
115	Bhola Nath Mukerjee† ...	20-0	Hooghly (Private).

Low.

1	Bhupati Bhusan Banerjee...	17-8	Hooghly Training School.
2	Nabadwip Chandra Baishnab	15-0	Chittagong ditto.
3	Saim Uddin Mandal ...	16-3	Rangpur ditto.
4	Rajab Ali Mollah ...	21-3	Do. ditto.
5	Radha Binod Pal ...	18-11	Hooghly ditto.
6	Jadu Nath Sil ...	19-9	Rangpur ditto.
7	Bhujanga Bhusan Bhattacharjee.	15-3	Do. ditto.
8	Aswini Coomar De ...	15-0	Dacca ditto.
9	Indra Coomar Majumdar ...	17-5	Hooghly ditto.
10	Abbas Uddin Talukdar ...	18-3	Rangpur ditto.
11	Prannath Biswas ...	20-0	Krishnagar ditto.
12	Rajani Kanta Chakravarti ..	15-9	Dacca ditto.
13	Rohini Ranjan Muchchiddi†	17-4	Chittagong (Private).
14	Samuel Biswas ...	19-0	Krishnagar ditto.
15	Rajani Kanta Roy ...	17-0	Dacca ditto.

† Candidates other than those whose names are marked with dagger have passed in Manual work

SECOND GRADE—*concld.*

Low—concld..

No.	NAME.	Age.	Training School.
16	Sasi Bhusan Chowdhuri ...	19-0	Chittagong Training School
17	Hari Mohan Sarkar ...	16-9	Rangpur ditto.
18	Serajul Islam Chaudhuri ...	17-0	Chittagong ditto.
19	Chandra Sekhar Khan ...	19-10	Hooghly (Private).
20	Ram Charan Biswas ...	27-8	Calcutta (Private.)
21	Prasanna Mohan Majumdar	16-3	Dacca Training School.
22	Sasadhar Goswami ...	16-0	Calcutta ditto.
23	Kanti Chandra Chakravarti	18-0	Do. ditto.
24	Dwarka Nath Das ...	17-5	Dacca ditto.
25	Purna Chandra Mandal ...	15-0	Calcutta ditto.
26	Hari Mohan Nandi ...	15-1	Hooghly ditto.
27	Achyutananda Chakravarti	19-0	Calcutta ditto.
28	Pasupati Nath Saha † ...	17-0	Do. ditto.

V. H. JACKSON,
Assistant Director of Public Instruction, Bengal.

CALCUTTA,
The 11th April 1905.

STATE TECHNICAL SCHOLARSHIPS FOR NATIVES OF BENGAL.

1. With a view to provide for natives of India the higher technical education which may qualify them to assist in promoting the improvement of existing native industries, and the development of new industries wherever this may be possible, the Government of India are ready, as an experimental measure, to give a small number of Technical scholarships, if promising candidates, well qualified in some particular branch of industry, present themselves. The outlines of the scheme are sketched out below.

2. *Value of the scholarships.*—The value of the scholarships has been fixed at £150 a year, in addition to fees payable to the institutions where the scholars will study and travelling expenses; but Government will consider proposals for increasing it in special cases.

3. *Places and periods of tenure.*—Each scholarship is tenable for an average period of two years, which may be increased or reduced in special cases.

4. The scholarships may be held in Great Britain, on the Continent of Europe, or in America, and are payable from the date of the scholar's arrival in the country which he may select for study.

5. *Subjects of study.*—Law, Medicine, Forestry, Veterinary Science, Agriculture and Engineering have been excluded from the scope of the present proposal. The scholarships are in the first instance proposed to be used for the encouragement of the mining industry in Bengal, but any other branch of industry can similarly be helped and fostered. Industries in which native capital and enterprise are engaged, or likely to be engaged, and in which the trained scholar might, on return to his country, find scope for his skill and ability, will be particularly appropriate for selection.

6 *Conditions of award.*—The scholarships are tenable by persons who are natives of India within the meaning of section 6 of the Statute, 33 Vic., Cap. 3. A competent knowledge of English, or the language of any other country in which the candidate proposes to work and study is essential to enable him to take full advantage of the course of study.

7. In the matter of selection of scholars, Government will be guided by considerations of the candidate's capacity, intelligence, particular interest in and connection with the industry selected, and the assurance that he will continue to devote himself to the subject on his return to India. These being matters which cannot be decided by the holding of degrees obtained, by examination, or by competition, no special examination is considered necessary and none will be held. But a scholar before nomination should have received the best technical education available in the Province, in the particular industry which he has to study, and no candidate will be considered qualified unless he has displayed an aptitude for technical study.

8. No age-limit has been fixed. But it may be fixed by Government in certain cases.

9. The candidates for scholarships should submit certificates attesting (*a*) their moral character, (*b*) knowledge of the language of the country in which they elect to study, and (*c*) physical capacity, from recognised persons who may be considered fit to certify to these facts. These certificates will not be returned.

10. The scholars in England or elsewhere, as the case may be, will be under the control and supervision of the Secretary of State. The conditions under which they will hold the scholarships will be similar to those laid down for Government of India scholarships, and power will be retained to cancel a scholarship and to send the scholar back to India if his progress and conduct be not satisfactory.

11. *Returned scholars.*—No scholar will be bound on his return to India by any engagement to serve Government or a private firm, and the choice of his career will be in the first instance determined, on his return from Europe by his own inclination. Should any occasion arise, Government will be glad to turn his ability and increased knowledge to account as teacher in an Industrial school or in other capacities connected with the improvement of local industies.

12. Applications from natives of Bengal for such scholarships for the development of the mining industry, in the first instance, should be made direct to the Director of Public Instruction, Bengal, on or before the 1st May 1905. Full particulars should be furnished as to the past educational experience, training and future requirements of each applicant for a scholarship. Applicants should also indicate, if possible, what they wish to work at in their future careers on return to India. The scholarships will be awarded by the Government of India on the recommendation of the Local Government.

CALCUTTA,
The 4th April 1905.

A. PEDLER,
Director of Public Instruction, Bengal.

VERNACULAR MASTERSHIP EXAMINATION, 1905.

(PATNA, BHAGALPUR AND CHOTA NAGPUR DIVISIONS).

FIRST GRADE.

The undermentioned candidates have passed the examination.

High.

No.	Name.	Age.		School.
		Yrs.	M.	
1	Mangani Roy*	19	8	Patna Training School.

Medium.

[In order of merit].

1	Shyama Ram	18	8	Patna Training School.
2	Bal Mukund Lal	17	5	„ „ „
3	Gazumfar Hussain*	18	8	„ „ „
4	Shyam Sundar Sahu*	15	4	Ranchi „ „
5	Mohammad Abdul Majid	15	8	Patna „ „
6	Shewabaran Pandey*	13	3	„ „ „
7	Jadu Nandan Upadhya*	18	8	„ „ „
8	Bhagabat Pandey†	18	2	„ „ „
9	Ranjit Sinha†	15	11	„ „ „
10	Hardeo Singh	18	2	„ „ „
11	Ram Naresh Chaubey	18	2	„ „ „
12	Matadin Avasthi...	18	4	„ „ „
13	Sheo Dutt Pandey	17	7	„ „ „
14	Jay Nandan Sinha	18	8	„ „ „
15	Abdul Razaq	17	8	„ „ „
16	Muneswar Lal†	18	8	„ „ „
17	Bishun Roy†	17	7	„ „ „

Low.

1	Syed Mahammad Yusuf*	18	8	Patna Training School.

FIRST GRADE.

Candidates passed in the Old Course and taking up one or more new subjects.

SCIENCE, KINDERGARTEN AND ART OF TEACHING, DRAWING, DRILL AND MANUAL WORK.

Ram Naresh Ram	27	0	Head Pandit, Kamtaul M. V. School.

Science, Kindergarten and art of Teaching, Drill and Manual Work.

Jaleswar Prasad	20	0	Head Pandit, Patabi Guru-training School.

* Entitled to special Certificates in Drawing.
† Candidates other than those whose names are marked with dagger have passed in Manual Work.

SECOND GRADE.

HIGH.

No.	Name.	Age.	School.
		Yrs. M.	
1	Gouri Prasad	18 11	Ranchi Training School.
2	Raja Sinha†	15 7	Patna " "

Medium.

[Arranged in order of merit.]

		Yrs. M.	
1	Din Dayal Pandey	17 1	Ranchi Training School.
2-3	Kamtah Prasad	16 1	Patna " "
	Amir Chand Ram	18 8	" " "
4	Lakshmi Sinha	15 9	" " "
5	Shyama Singh	18 4	Ranchi Training School.
6	Niranjan Misra†	18 11	Patna " "
7	Jhinguri Chaubey	18 8	" " "
8	Dhanush Dhari Mahto	25 0	Head Guru, Panari Upper Primary School.
9	Indrasan Pandey	16 9	Matihari Training School.
10	Mahammad Abdul Wahid	16 10	Patna " "
11	Bedananda Kuar†	16 1	" " "
12	Mahabir Prasad	16 8	" " "
13	Ramdas Ram†	20 9	" " "
14	Kanda Potor Ho	19 4	Ranchi " "
15	Ram Saighasan Prosad	19 3	Matihari " "
16	Ram Charitra Jha†	17 3	Patna " "
17-18	Kedar Nath Chaudhuri†	17 2	" " "
	Deo Narayan Lal	19 3	Matihari " "
19	Chhatu Ram	16 2	Ranchi " "
20	Ram Bahadur Sinha	18 9	Matihari " "
21	Bhupal Sahu†	16 9	Patna " "
22	Deo Charan Ram	18 0	Ranchi " "
23	Indordeo Lal	17 6	Matihari " "
24	Durga Sinha†	15 11	Patna " "
25	Joygovind Misra†	18 2	" " "
26	Chandra Madhab Roy†	15 2	" " "
27	Anup Chowdhuri†	17 2	" " "
28	Basudeo Narayan Chowdhuri† ...	16 2	" " "
29	Nand Kishwar Lal	32 0	2nd Master, Budhkara Raj M. V. School.
30	Lakshman Mahton†	19 2	Patna Training School.
31	Suleman	17 7	Ranchi " "

Low.

[In order of merit.]

1	Gudar Ram	17 1	Ranchi Training School.
2 3	Abdul Gani	16 8	Patna " "
	Ram Chandra Rai†	19 0	Teacher.
4-5	Ram Chis Pandey†	17 8	Patna Training School.
	Rangtoo Hazam	15 4	Ranchi " "
6	Matukdhari Singha	20 0	Head Guru, Sain Upper Primary School.

* Candidates other than those whose names are marked with dagger have passed in Manual Work.

CALCUTTA,
The 10th April 1905.

V. H. JACKSON,
Assistant Director of Public Instruction, Bengal.

NOTICE.

COMMERCIAL CLASSES IN THE PRESIDENCY COLLEGE.

DAY classes in the following subjects will be opened in the College on the 25th June 1905:—

1. English (modern), especially English correspondence, including Commercial correspondence, letter-drafting and précis-writing.
2. Arithmetic, including Commercial and Mental Arithmetic.
3. Book-keeping, Short-hand and Type-writing.
4. Commercial History and Geography.
5. Bengali, especially Commercial correspondence, letter-writing, précis-writing and translation.

All will be admitted to the Day classes who have passed the School Final or the Entrance Examination or who are able to satisfy the Education Department by passing a simple preliminary test examination.

There is no age limit.

The fee for the Day classes is Rs. 3 a month.

P. K. RAY,
Offg. Principal, Presidency College.

PRESIDENCY COLLEGE, CALCUTTA, *the 8th March 1905.*

NOTICE.

IN connection with the Commercial classes in the Presidency College, Professor H. M. Percival will deliver a course of about 32 lectures in the *evening* on the Outlines of Political Economy.

The course will begin on Tuesday, the 7th March, at 6-30 P.M., and will be continued on Tuesdays and Fridays at the same hour until further notice. The first lecture will be open to the public. The subject will be treated popularly.

The fee for the whole course will be Rs. 5, payable in advance.

Tickets may be obtained from the College office between 11 A.M. and 4 P.M. on week days.

CALCUTTA,
The 20th March 1905.

P. K. RAY,
Offg. Principal, Presidency College.

CIVIL ENGINEERING COLLEGE, SIBPUR.

ENGINEER DEPARTMENT.

SESSION 1905-1906.

CANDIDATES for admission to the Engineer Department should apply to the Principal in the prescribed form on or before the 15th May 1905. Each application must be accompanied by a registration fee of Re. 1.

The session begins on Monday, the 5th June 1905.

Candidates must furnish proof that they have passed one of the following tests:—

(1) The B.A. Examination in the B course in Physics and Chemistry of the Calcutta University. The candidate's age must be under 23 years.
(2) The F.A. Examination of the Calcutta and Madras Universities.
(3) The Intermediate Examination of Allahabad and Punjab Universities.
(4) The Intermediate Examination for the degree of B.A. of Bombay University.
(5) The High School Examination for Europeans and Eurasians.

The candidate's age in (2), (3), (4) and (5) must be under 21 years.

In selecting candidates who have passed the F.A. (all other things being equal), preference will be given to those who have passed in Sanitary Science in addition to the ordinary subjects of the F.A. Examination.

The maximum number to be admitted is limited to 40. The position in the University examination and the age of the candidate will be taken into consideration when selection is made, and such selection will be made by the Principal.

The tuition fee for students to the Engineer class is Rs. 10 a month for each month of the year, vacation included.

Ten scholarships will be awarded to students entering the Engineer Department not being already holders of junior or senior scholarships. Two of these will be reserved for

Europeans and Eurasians. Every applicant, before admission to the College, will be examined by the College Surgeon as to his physical strength, fitness for manual labour and eyesight.

Form of application for admission and any further particulars will be supplied upon application.

SIBPUR,
The 8th April 1905.

A. MACDONELL,
Offg. Principal, Civil Engineering College, Sibpur.

CIVIL ENGINEERING COLLEGE, SIBPUR.

APPRENTICE DEPARTMENT.

SESSION 1905-1906.

CANDIDATES for admission to the Apprentice Department should apply to the Principal in the prescribed form on or before the 6th May 1905. Each application must be accompanied by a registration fee of Re. 1.

The session begins on Monday, the 5th June 1905. Candidates must furnish proof that they have passed one of the following tests :—

(1) Standard VII or Middle School Examination of the Code of European Schools.
(2) University Entrance Examination.

The candidate's age must be at least fifteen and not more than seventeen years.

There are forty-five vacancies for natives and nine for Europeans and Eurasians. The selection of candidates for admission will be made by the Principal.

There is one vacancy on the free list for Christian Apprentices in June next and there are three on the reduced fee list. For natives there are five vacancies on the reduced fee list, and six more will become vacant during the month of June. Election to these lists will be made by the Board of Visitors. Forms to be filled up for the consideration of the Board can be had on application to the Principal.

Every applicant before admission to the College will be examined by the College Surgeon as to his physical strength, fitness for manual labour and eyesight.

Before an applicant is admitted to the College his parent or guardian must sign an agreement in the prescribed form.

All applications from Christian candidates for admission to the free or reduced fee lists must reach the Principal not later than 6th May, so as to enable the elections to be made by the Board of Visitors before the opening of the session.

The vacancies on the native list will be filled up after the opening of the session from those apprentices who have joined the College after admission. Forms of application for admission and further particulars will be supplied on application.

SIBPUR,
The 8th April 1905

A. MACDONELL,
Offg. Principal, Civil Engineering College, Sibpur.

ORDERS BY THE VICE-CHANCELLOR AND SYNDICATE OF THE CALCUTTA UNIVERSITY.

THE undermentioned candidates have passed the M.B. Examinations :—

PRELIMINARY SCIENTIFIC M.B. EXAMINATION.

SECOND DIVISION.

(*In alphabetical order.*)

	Babu Rang Rao Khisty ...	...	Medical College, Calcutta.
	Datta, Saratkumar ...	...	Ditto.
	Gupta, Kshetramohan ...	...	Ditto.
	Misra, Parmanand Victor ...	...	Ditto.
	Ray, Satyendranath ...	...	Ditto.
	Sen, Atindranath ...	...	Ditto.
7	Sinha, Khagendrabinod ...	...	Ditto.

FIRST M B. EXAMINATION

FIRST DIVISION.

	Gangopadhyay, Brajendranath ...	...	Medical College, Calcutta.

SECOND DIVISION.

(*In alphabetical order.*)

	Misra, Parmanand Victor	...	...	Medical College, Calcutta.
	Pal, Sachindrabhushan	...	...	Ditto.
	Sanyal, Charuchandra	...	...	Ditto.
	Sen, Atindranath	...	...	Ditto.
	,, Jyotilal	...	...	Ditto.
6	Sengupta, Sasikumar	...	...	Ditto.

SECOND M.B. EXAMINATION.

FIRST DIVISION.

	John, D.	...	...	Medical College, Calcutta.

SECOND DIVISION.

(*In alphabetical order.*)

	Das, Manindranath	...	...	Medical College, Calcutta.
2	Ray, Jaminibhushan	...	...	Ditto.

The undermentioned candidates who failed at the First M.B. Examination have attained the standard of the First L.M.S. Examination :—

(*In alphabetical order.*)

	Basu, Pasupati	...	...	Medical College, Calcutta.
	Mitra, Sailacharan	...	...	Ditto.
3	Mukhopadhyay, Saileswar	...	...	Ditto.

The undermentioned candidates who failed at the Preliminary Scientific M.B. Examination have attained the standard of the Preliminary Scientific L.M.S. Examination :—

(*In alphabetical order.*)

	Bandyopadhyay, Jatindranath	...	...	Medical College, Calcutta.
	,, Nilratan	...	...	Ditto.
	Barat, Bibhutibhushan	...	...	Ditto.
	Basu, Pasupati	...	...	Ditto.
	,, Sudhirchandra	...	...	Ditto.
	Bhattacharyya, Sibnath	...	..	Ditto.
	Chattopadhyay, Prabhaschandra	...	...	Ditto
	Dabiruddin Ahmad	...	..	Ditto.
	Das, Harendranath	...	...	Ditto.
10	Dasgupta, Jatindramohan	...	...	Ditto.
	Datta, Amarendranath	...	...	Ditto.
	,, Sachindranath	...	...	Ditto.
	De, Satischandra	...	...	Ditto.
	Gangopadhyay, Satischandra	...	...	Ditto.
	Ghosh, Birendranath	...	...	Ditto.
	Gupta, Harinarayan	...	...	Ditto.
	,, Manoranjan	...	...	Ditto.
	Kayton, M.E.	...	...	Ditto.
	Md. Habibar Rahman	...	...	Ditto.
20	Md. Sulaiman Ashraf	...	...	Ditto.
	Mitra, Jyotiprasad	...	...	Ditto
	,, Sailacharan	...	...	Ditto
	Mukhopadhyay, Amulyanath	...	...	Ditto.
	,, Saileswar	...	...	Ditto.
	Pain, Prabodhchandra	...	...	Ditto.
	Pal, Satyaranjan	...	...	Ditto.
	Ray, Jogeschandra	...	...	Ditto.
	,, Nrityalal	...	..	Ditto.
	Raychaudhuri, Dakshinaranjan	...	...	Ditto.
30	,, Hemchandra	...	...	Ditto.
	Rudra, Bijaykumar	...	...	Ditto.
	Saha, Manmathanath	...	...	Ditto.
	,, Paranchandra	..	...	Ditto.
	Sanyal, Sukumar	...	..	Ditto.
	Sen, Dhirendranath	..	...	Ditto.
	,, Jogesnath	...	...	Ditto.
	,, Sureschandra	...	...	Ditto.
38	Sengupta, Saradaranjan	...	...	Ditto.

SENATE HOUSE,
The 17th April 1905.

K. C. BANERJI,
Registrar

NOTICE.

THE half-yearly examination of Teachers in the Art of Teaching (approved in Government order No. 1500T.—G., dated the 17th September 1904) will, for the Dacca Division, be held in the Collegiate School, Dacca, on the 28th and 29th August 1905, for teachers of English subjects, and at the Dacca Training School on the 30th and 31st August 1905, for Teachers of Vernacular subjects.

Teachers of English subjects must ordinarily have passed the Entrance Examination, or some higher examination before they can be examined in the Art of Teaching. Exceptions may be made in the case of experienced teachers who have not passed the Entrance Examination. Teachers of vernacular subjects must have at least passed the Middle Vernacular Examination. Candidates for either examination should send in their names to this office on or before the 10th August 1905, and should bring their examination certificates with them on the day of examination.

H. A. BAMFORD,
Inspector of Schools, Dacca Division

DACCA,
The 4th April 1905.

CALCUTTA UNIVERSITY.

NOTICE.

THE Griffith Prize for 1905 will be awarded by the Syndicate in the course of 1906.

The subject for the Prize will be an essay or record of original work in some Department of Letters.

All persons who have taken the degree of Bachelor in the Faculty of Arts or the corresponding degree in any other Faculty in this University will be allowed to compete.

Each candidate will be required to send his essay or record of work to the Registrar under a distinguishing motto. The name of the candidate must be forwarded at the same time in a sealed cover with the motto outside. Such essays or records of original work must reach the Registrar on or before the 31st December 1905.

The value of the Prize for 1905 will be Rs. 900.

K. C. BANURJI,
Registrar, Calcutta University.

SENATE HOUSE,
The 15th April 1905.

NOTIFICATION.

IT is hereby notified for general information that on the result of the Entrance Examination of 1905 the eleven third grade junior scholarships allotted to this Division under Government order No. 2916, dated the 9th September 1902, will be distributed as follows:—

Patna	2
Gaya	1
Shahabad	2
Saran	2
Champaran	1
Muzaffarpur	1
Darbhanga	2
Total ...	11

P. C. LYON, *Offg. Commissioner.*

PATNA COMMR.'S OFFICE, BANKIPORE, *the 15th April 1905.*

NOTIFICATIONS OF THE BOARD OF REVENUE.

No. 2440B.

NOTICE is hereby given that the Fifth Sale of Opium, the Provision of 1902-1903, will be held at the Government Opium Sale-room, No. 2 Bankshall Street, on Tuesday, the 2nd May 1905, at 11 A.M., and will comprise 4,000 chests, viz.—

	Chests.
Opium manufactured at the Patna Factory, consisting of ...	2,000
Ditto at the Ghazipur Factory, consisting of ...	2,000
Total ...	4,000

2nd.—The general conditions of the sale now advertised will be the same as usual. They may be ascertained by reference to the notification issued on the 22nd November 1904 and published in the *Government* and *Exchange Gazettes*, or on personal application at the office of the Board of Revenue.

3rd.—The latest dates for deposit and clearance will be the 8th and 17th May 1905, respectively, that is to say, no Bank of Bengal Receipts, Government Promissory Notes or other Public Securities that may be tendered for deposit in redemption of Promissory Notes given by purchasers in the sale-room will be received after 3-30 P.M. of Monday, the 8th May 1905, and no Bank of Bengal Receipts in full payment of lots will be accepted after 3-30 P.M. of Wednesday, the 17th May 1905.

4th.—In addition to the quantity above advertised for sale, the following quantities, more or less, of the opium manufactured at the Patna and Ghazipur Factories will be brought to sale between the sale now advertised and December next on or about the dates specified below. The Board of Revenue, however, reserve to themselves the right of altering these dates, should circumstances render it expedient to do so:—

DATES.	Manufactured at the Patna Factory; about chests.	Manufactured at the Ghazipur Factory; about chests.	Total, about chests.
On or about Tuesday, 6th June 1905 ...	2,000	2,000	4,000
On or about Tuesday, 4th July „ ..	2,000	2,000	4,000
On or about Tuesday, 1st August „ ...	2,000	2,000	4,000
On or about Tuesday, 5th September „ ..	2,000	2,000	4,000
On or about Tuesday, 26th September „ ...	2,000	2,000	4,000
On or about Wednesday, 1st November „ ...	2,000	2,000	4,000
On or about Tuesday, 5th December „ ..	2,000	2,000	4,000
Total ...	14,000	14,000	28,000

By order of the Board of Revenue, L. P.,

H. F. SAMMAN, *Offg. Secretary.*

BOARD OF REVENUE, L. P., CALCUTTA, *the 27th March 1905.*

No. 2939B.

NOTIFICATION.

CUSTOMS.

THE HON'BLE MR. K. G. GUPTA, I.C.S.

Dated Calcutta, the 18th April 1905.

IN supersession of the Notification, dated the 3rd January 1893, published in Part I, page 71, of the *Calcutta Gazette* of the 25th idem, it is hereby notified to all whom it may concern, under the provisions of secs. 9 and 72 of the Sea Customs Act, 1878, that the Collector of Customs, Chittagong, is ordinarily prohibited from granting permission to work cargo in sea-going vessels on Sundays. He shall, however, give written permission in the following cases:—

I. When the application to work is supported by a declaration in a prescribed form signed by the owner or agent of the vessel, certifying that the permission is absolutely necessary to enable the vessel to leave the port owing to the state of the river or to the condition of the weather.

II. When the application is made on grounds of special urgency, provided the Collector of Customs is satisfied that such grounds are sufficient.

III. When a vessel is a mail or regular steamer which calls at the port at fixed intervals.

IV. When the vessel is a native brig on which no European is employed.

V. When the application is made to discharge or load live-stock, ship's stores, ballast, or coal for the ship's use.

2. These orders do not modify the existing orders under which a fee of Rs. 6 is charged for the services of the Inspector and Preventive Officer, or the orders contained in the Resolution of Government, in the Financial Department, dated the 24th September 1888, under which a fee of Rs. 100 is payable on Christmas Day, Good Friday, the King's Birthday and the 1st of January, in addition to the ordinary fee for the Inspector and the Preventive Officer.

By order of the Board of Revenue, L. P.,

H. F. SAMMAN,

Offg. Secretary.

ELECTION OF MUNICIPAL COMMISSIONERS.

NOTIFICATION.

IT is hereby notified for general information that the following gentlemen are appointed to be members of the Committee for the management of the Dispensary at Nabinagar, in the district of Gaya, in supersession of those appointed in December 1901:—

1. Babu Naurangdeo Narain Sinha.
2. ,, Inderdeo Narain Singh.
3. ,, Sunderdeo Narain Singh.
4. ,, Harsahai Lal.
5. ,, Kali Prasad Singh.
6. Shaikh Nabijan.
7. Babu Jai Prakash Singh.

C. R. MARRIOTT, *Addl. Commissioner.*

PATNA COMMR.'S OFFICE, BANKIPORE, *the 15th April 1905.*

NOTIFICATION.

IT is hereby notified for general information that two bye-elections will be held in Wards Nos. II and VIII of the Basirhat Municipality, in the district of the 24-Parganas, on Saturday, the 3rd June 1905, to elect Commissioners for those Wards in the place of Munshi Kanai Mondal and Din Mohammed Khan, who have been removed under section 20 (*1*) (*c*) of the Bengal Municipal Act as amended.

F. W. DUKE, *Offg. Commissioner.*

COMMISSIONER'S OFFICE, PRESIDENCY DIVISION, CALCUTTA, *the 17th April 1905.*

NOTIFICATION.

IT is hereby notified for general information that under section 27 of the Bengal Municipal Act, III of 1884, as modified up to 1st November 1896, a bye-election will be held in Ward No. V of the Midnapore Municipality on Friday, the 26th May 1905, to fill up the vacancy caused by the removal of Babu Peary Lal Dutta, one of the elected Commissioners of the Municipality.

N. L. BAGCHI, *Personal Asst.*, for *Offg. Commissioner on tour.*

BURDWAN COMMR.'S OFFICE, CHINSURA, *the 11th April 1905.*

The Calcutta Gazette.

WEDNESDAY, APRIL 19, 1905.

PART IA.

Orders and Notifications by the Government of India, &c.

[*Reprinted from the "Gazette of India."*]

The following order, issued by the Government of India in the Home Department, is republished for general information.

R. W. CARLYLE,
Offg. Chief Secy. to the Govt. of Bengal.

NOTIFICATION.

PUBLIC.

Simla, the 14th April 1905.

No. 925.—His Excellency the Governor-General is pleased to declare that the Chairman and Members of the Railway Board shall have the privilege of private entrée to Government House.

H. H. RISLEY,
Secy. to the Govt. of India.

The following order, issued by the Government of India in the Department of Revenue and Agriculture (Civil Works), is republished for general information.

R. W. CARLYLE,
Offg. Chief Secy. to the Govt. of Bengal.

NOTIFICATION.

Simla, the 14th April 1905.

No. 105.—With reference to Home Department Notification No. 1366Public, dated the 24th June 1904, Mr. N. L. Hallward is placed in charge of that portion of the Department of Revenue and Agriculture (Civil Works) Secretariat of the Government of India which is in Calcutta, during the absence of the Government of India at Simla.

SIDNEY PRESTON,
Secy. to the Govt. of India.

The following order, issued by the Government of India in the Finance Department, is republished for general information.

R. W. CARLYLE,
Offg. Chief Secy. to the Govt of Bengal.

NOTIFICATION.

Simla, the 14th April 1905.

No. 2117P.—Mr. A. W. Dentith, Indian Civil Service, is appointed to officiate in class II of the Enrolled List of the Financial Department, with effect from the 25th of March 1905, and is posted as Assistant Comptroller, India Treasuries.

W. S. MEYER,
Secy. to the Govt. of India.

The following order, issued by the Government of India in the Department of Commerce and Industry, is republished for general information.

R. W. CARLYLE,
Offg. Chief Secy. to the Govt. of Bengal.

NOTIFICATION.

CUSTOMS.

INDIAN TEA CESS ACT.

Simla, the 11th April 1905.

No. 1039C.—In exercise of the power conferred by section 4, sub-section (*3*), of the Indian Tea Cess Act, 1903 (IX of 1903), the Governor-General in Council is pleased, on the recommendation of the Dooars Planters Association, to appoint Mr. W. Milne to fill the vacancy on the Tea Cess Committee caused by the resignation of Mr. W. A. J. Thomson.

W. L. HARVEY,
Secy. to the Govt. of India.

The following orders, issued by the Government of India in the Military Department, are republished for general information.

R. W. CARLYLE,
Offg. Chief Secy. to the Govt. of Bengal.

Simla, the 14th April 1905.

PROMOTIONS.

No. 292.—The following promotions are made, subject to His Majesty's approval :—

INDIAN MEDICAL SERVICE.

BENGAL.

Majors to be Lieutenant-Colonels.

1st April 1905.

Francis James Drury, M.B.
Herbert Jekyl Dyson, F.R.C.S.
Frederick Arthur Rogers, D.S.O.

VOLUNTEER CORPS.

APPOINTMENTS, PROMOTIONS AND RESIGNATIONS.

Calcutta Light Horse.

No. 296.—Adrian Caddy, Gentleman, M.D., London, F.R.C.S., England, D. P. H., to be Surgeon-Lieutenant, to fill an existing vacancy.

Bengal-Nagpur Railway Volunteer Rifle Corps.

No. 306.—Captain Arthur Stowey Bailey to be Major to fill an existing vacancy.

H. B. B. WATKIS, *Colonel,*
for *Secy. to the Govt. of India.*

The Calcutta Gazette.

WEDNESDAY, APRIL 19, 1905.

PART IB.

ORDERS BY THE LIEUT.-GOVERNOR OF BENGAL.

MUNICIPAL AND LOCAL.

NOTIFICATIONS.

No. 116T.M.—The 18th April 1905.—It is hereby notified for general information that, in accordance with the recommendation of the Commissioners of the Chandpur Municipality, in the district of Tippera, made at a meeting, the Lieutenant-Governor intends, in exercise of the power vested in the Local Government by section 9 (*b*) of the Bengal Municipal Act, III of 1884, to revise the boundaries of the said Municipality so as to exclude the village of Koralia lying within the boundaries specified below from the area of the said Municipality, unless good reasons are shown to the contrary within six weeks from the date of the publication of this notification within the Municipality.

Tippera.

I.—Boundaries of the village of Karalia:—

On the north.—Jangal from its north-west corner to the north of the house of Easin Haliji.

On the east.—Eastern boundaries of the *baris* of Mafijuddi Khalipa, Jamaruddi Jamadar and open field.

On the south.—Southern boundaries of the *baris* of Osman Bepary, Naimaddi Bhuiah, Mantajuddi Bhuiah, Hasan Ali, Karimuddi Haji and Alimaddy Soyal.

On the west.—Railway lands.

II.—The boundaries of the Municipality after the exclusion of Koralia will be as follows:—

A.—North Section.

On the north.—Southern boundaries of the *baris* of Osman Bepary, Naimaddi Bhuiah, Mantazaddi Bhuiah, Hasanali, Karimaddi Haji and Alimaddi Soyal and north by the house of Miajan in Bishnadi.

On the east.—The eastern boundaries of the *baris* of Meajan Dangoo, Hanif Soyal, Osman Dangoo, Ranjagasi Tajamaddi, Baliarkha and Nurbaksha up to culvert No. 3 on the railway lands.

On the south and west.—Railway lands.

B.—SOUTH SECTION.

On the north.—Railway lands.

On the east.—The eastern boundaries of the *baris* of Jaman Kha, Alabaksa Hanif and of the *charabari* of Kukurisha, *baris* of Baliankha, Dangoo Soyal, Gobinda Dhupee, Gobinda Sha and Jamiruddi up to the Bagadi ferry.

On the south.—The northern boundaries of the villages of Ichali, Raghunathpur and Jafrabad, and the Napitbari khal.

On the west.—The western boundary of Hari Poddar's house on the north bank of the Napitbari khal, the khal from the western head of the Sriraudi road to the Megna river and the Megna river.

Tippera.

No. 118T.M.—The 12th April 1905.—It is hereby notified for general information that the Lieutenant-Governor intends, in the exercise of the power vested in the Local Government by section 221 of the Bengal Municipal Act, III of 1884, and in accordance with the recommendation of the Commissioners of the Brahmanbaria Municipality, in the district of Tippera, made at a meeting, to extend the provisions of Part IX of the said Act to the part of the above Municipality, the boundaries of which are given below, unless good reasons are shown to the contrary within one month from the date of the publication of this notification within the Municipality :—

Boundaries.

On the north—By a line drawn from the point of intersection of two lines running parallel to the north and west banks of the tank at the Munsif's quarters at a distance of 150 feet and 60 feet respectively, and passing eastwards through points 30 feet and 25 feet from the north of Jail compound and Lakanath tank, respectively, and touching the north side of the compound of Babu Protap Chandra Datta's house and through a point 100 feet north of Edward Institution and by the southern side of the compounds of Gopal Shaha's and Padmo Lochan Kaibarta's houses and ending in a point close to the river Titas.

On the east—By the river Titas.

On the south—By Gokarna khal.

On the west—By the road passing by the west of the Munsif's quarters and Kailash Shaha's tank and by the drain to the west of Babu Chandra Shekar Bardhan's and Sarada Charan Gupta's houses and by the road to the west of Raj Chandra Shaha's house and east of Ansar Najarchi's house.

Backergunge.

No. 125T.M.—The 12th April 1905.—In supersession of Government Notification No. 3501M., dated the 8th December 1904, published at page 263 of Part IB of the *Calcutta Gazette* of the 14th idem, it is hereby notified for general information that the Lieutenant-Governor intends, in the exercise of the power vested in the Local Government by section 221 of the Bengal Municipal Act, III of 1884, and in accordance with the recommendation of the Commissioners of the Barisal Municipality in the district of Backergunge, made at a meeting, to extend the provisions of Part IX of the said Act to the area specified below of the above Municipality, unless good reasons are shown to the contrary within one month from the date of the publication of this notification within the Municipality.

The area is bounded—

On the north—By an imaginary line (running from east to west from the Shaistabad Road on the east to the Lakutia Road on the west) drawn parallel at a distance of 800 feet to the north of the whole length of the roads called Shaw Road and Kaunia Road.

On the west—By the Lakutia Road from the point where the western end of the aforesaid northern boundary meets it to the junction of the Lakutia and Madhobpasa Roads, and thence along the Madhobpasa Road for a distance of 500 feet, and thence by an imaginary line running parallel to the West Bagura, South Bagura and Alekanda Roads up to the Jhalokati Road.

On the south—By an imaginary line from the point where the western boundary meets the Jhalokati Road up to the south-east corner of the tank, belonging to Aminuddin, Ukiluddin, Iasin Kasi and Nawabali of Alekanda village, and thence by the Haldarbari khal down to John Battye Bridge, and thence again by an imaginary line due east to the Barisal river.

On the east—By the Barisal river.

No. 137T.M.—The 12th April 1905.—It is hereby notified that, under section 27 of the Bengal Municipal Act, III of 1884, the Lieutenant-Governor is pleased to appoint Babu Nibaran Chandra Bhattacharji to be a Commissioner of the Debhatta Municipality, in the district of Khulna, *vice* Babu Narendra Nath Mazumdar, deceased.

Khulna.

No. 142T.M.—The 14th April 1905.—It is hereby notified that, under section 59 of the Bengal Municipal Act, III of 1884, the Lieutenant-Governor approves the election by the Commissioners of the Chittagong Municipality, in the district of Chittagong, of Mr. E. E. Francis to be their Chairman, *vice* Mr. E. Good, resigned.

Chittagong.

No. 144T.M.—The 14th April 1905.—It is hereby notified that the members of the Munshiganj Local Board in the district of Dacca, having at a meeting, under section 25 of the Bengal Local Self-Government Act, III of 1885, requested the Lieutenant-Governor to appoint a Chairman, the Lieutenant-Governor is pleased under the said section to appoint the Subdivisional Officer of Munshiganj to be the Chairman of that Local Board.

Dacca.

No. 148T.M.—The 14th April 1905.—It is hereby notified for general information that the Lieutenant-Governor intends, in the exercise of the power vested in the Local Government by section 221 of the Bengal Municipal Act, III of 1884, and in accordance with the recommendation of the Commissioners of the Maniktala Municipality, in the district of 24-Parganas, made at a meeting, to extend the provisions of Part VIII of the said Act to the above Municipality, unless good reasons are shown to the contrary within one month from the date of the publication of this notification within the Municipality.

24-Parganas.

No. 151T.M.—The 14th April 1905.—Whereas a Notification No. 522M., dated the 27th January 1905, was published at page 23, Part IB of the *Calcutta Gazette* of the 1st February 1905, declaring the intention of the Lieutenant-Governor to extend the provisions of Part X of the Bengal Municipal Act, III of 1884, to the Barisal Municipality in the district of Backergunge, and whereas no objection has been raised to the proposal within one month from the date of the publication of the above notification within the Municipality, it is hereby notified for general information that in the exercise of the power vested in the Local Government by section 221 of the Act, and in accordance with the recommendation of the Commissioners of the Barisal Municipality, made at a meeting, the Lieutenant-Governor sanctions the extension of the above provisions of the Municipal Act to the said Municipality.

Backergunge.

No. 154T.M.—The 14th April 1905.—It is hereby notified that, under section 27 of the Bengal Municipal Act, III of 1884, the Lieutenant-Governor is pleased to appoint Munshi Fakir Ullah to be a Commissioner of the Katwa Municipality, in the district of Burdwan, *vice* Babu Kalidas Gupta, deceased.

Burdwan.

No. 158T.M.—The 14th April 1905.—It is hereby notified for general information that the Lieutenant-Governor intends, in the exercise of the power vested in the Local Government by section 221 of the Bengal Municipal Act, III of 1884, and in accordance with the recommendation of the Commissioners of the Halishahar Municipality, in the district of the 24-Parganas, made at a meeting, to extend the provisions of Part X of the said Act to Ward No. IV of the above Municipality, unless good reasons are shown to the contrary within one month from the date of the publication of this notification within the Municipality.

24-Parganas.

No. 171T.M.—The 15th April 1905.—It is hereby notified that, under section 19 of the Bengal Local Self-Government Act, III of 1885, the Lieutenant-Governor is pleased to appoint Mr. A. G. B. Hay to be a member of the Siwan Local Board, in the district of Saran, *vice* Mr. J. E. Rutherford, resigned.

Saran.

No. 173T.M.—The 15th April 1905.—In exercise of the powers conferred by section 9, sub-section (2), clause (c) of the Calcutta Municipal Act, 1899, the Lieutenant-Governor is pleased to appoint the following gentlemen, who are Commissioners of Calcutta, to be members of the General Committee of the Corporation of Calcutta :—

Calcutta.

The Hon'ble Mr. K. G. Gupta, I.C.S.
Mr. W. Banks Gwyther.
The Hon'ble Babu Nalin Behari Sircar, C.I.E.
Mr. C. A. White.

No. 199T.M.—The 17th April 1905.—Whereas a notification, No 2681T.M., dated the 29th October 1904, was published at page 237, Part IB of the *Calcutta Gazette* of the 9th November 1904, declaring the intention of the Lieutenant-Governor to vest in the Commissioners of the Cox's Bazar Municipality, in the district of Chittagong, the control and administration of the public dispensary situated within the jurisdiction of the above Municipality, and whereas no valid objection has been raised to the proposal within one month from the date of the publication of the above notification within the Municipality, it is hereby notified for general information that, in the exercise of the power vested in the Local Government by section 32 of the Bengal Municipal Act, III of 1884, the Lieutenant-Governor vests the control and administration of the said dispensary in the Commissioners of the Cox's Bazar Municipality.

Chittagong.

No. 208T.M.—The 17th April 1905.—It is hereby notified that, under section 19 of the Bengal Local Self-Government Act, III of 1885, the Lieutenant-Governor is pleased to appoint Mr. T. C. Simpson to be a member of the District Board of Ranchi, *vice* Mr. G. Meares, resigned.

Ranchi.

E. A. GAIT,
Offg. Secy. to the Govt. of Bengal.

Notification of the Corporation of Calcutta.

IT is hereby notified that the following Commissioners have been elected members of the General Committee for the year 1905-1906, under clauses (*a*) and (*b*) of section 9 (2) of the Calcutta Municipal Act, 1899:—

Under section 9 (2) (a).

Mr. H. E. A. Cotton.
Babu Radha Churn Pal.
Maulvi Badruddin Haidar, Khan Bahadur.
Babu Priya Nath Mullick.

Under section 9 (2) (b).

Dr. Koilash Chunder Bose, Rai Bahadur.
Mr. J. R. Bertram.
The Hon'ble Maulvi Seraj-ul-Islam, Khan Bahadur.
Mr. W. H. Phelps.

C. F. PAYNE,
for Chairman of the Corporation.

The 18th April 1905.

The Calcutta Gazette.

WEDNESDAY, APRIL 19, 1905.

PART II.

Advertisements.

[N. B.—Advertisements, Notices, &c., intended for insertion in this part of the Gazette cannot be received after Noon on Monday.]

LAND SALE NOTICES.

Notification A

NOTICE is hereby given, under sections 6 and 13, Act XI of 1859, that the undermentioned estates and shares of estates in the district of Chittagong will be put up for sale at the office of the Collector of that district on the 1st May 1905 at 12 A.M. for arrears of revenue and other demands, which by law are realisable as arrears of land revenue.

When in columns 5, 7 and 9 of the appended statement it is stated that only a share is to be sold, it is to be understood that a separate account is kept for that share.

Tauzi No.	Name of mahal and pargana.	Sadar jama of whole estate.	Whether the whole estate is to be sold.	If only a share is to be sold, specification of such share or shares.	Names of proprietors of property to be sold.	If only a share is to be sold, the sadar jama of such share.	If the whole estate is to be sold, the arrears due from it.	If only a share is to be sold, the arrears due from it.
1	2	3	4	5	6	7	8	9
		Rs. A. P.				Rs. A. P.	Rs. A. P.	Rs. A. P.
891 891 897 1779	Thana Satkania, taraf mauza Amirabad.	1,461 13 8	A share is to be sold	Only the residuary share No. 2.	Taran Sinha Hazari and Srimati Golap Kumari.	966 15 8	.....	284 1 2
1181 889 1274	Thana Sarwargunge, taraf Doulat Shah.	222 9 6	The whole estate is to be sold.	..	Shaik Mokbul Ahamed Chowdhury and Ali Ahamed Chowdhury.	.....	0 2 0	.....
1262 1077 1266	Thana Satkania, mauza Gerangya Kanoita, taraf Mangal Ram Hazari	2,015 5 9	A share is to be sold	Only the residuary share No. 2.	Taran Sinha Hazari	1,336 13 9	.....	268 13 5
1467 1467 1469	Thanas Patya, Satkania, Patiakhari and Hathazari, taraf Kurim Khan.	716 12 0	The whole estate is to be sold.	....	Anowar Ali ..	.....	171 12 0	.....
3447 3448a	Thanas Chakaria, Patia, Rowana and Town, taraf Ram Sundar Kanungoe.	849 6 6	A share is to be sold.	Only the residuary share No. 2.	Salamat Ali Khan Chowdhury, Sher Ali Khan Choudhury and others.	661 6 3	.....	169 12 8
38715 38716 38720	Thana Chakaria, mauza Dhurupur, zaimi taluk Srimati Thando Bibi Kabeisa, taluk Sheramoola Khan	269 13 0	The whole estate is to be sold.	.....	Prasana Kumar Rai	.....	269 6 0	.....

NOTE.—The figures shown in columns 8 and 9 indicate the arrears remaining unpaid on the 28th February 1905.

Chittagong Collectorate, the 20th March 1905.

F. P. DIXON, Collector.

Notification A.

NOTICE is hereby given, under sections 6 and 13, Act XI of 1859, that the undermentioned estates and shares of estates in the district of Cuttack will be put up for sale at the office of the Collector of that district on the 22nd day of May 1905 at 8 A. M. for arrears of revenue and other demands which by law are realisable as arrears of land revenue

When in columns 5, 7 and 9 of the appended statement it is stated that only a share is to be sold, it is to be understood that a separate account is kept for that share.

Tauzi No.	Name of mahal and pargana.	Sadar jama of whole estate.	Whether the whole estate is to be sold.	If only a share is to be sold, specification of such share or shares.	Names of proprietors of property to be sold.	If only a share is to be sold, the sadar jama of such share.	If the whole estate is to be sold, the arrears due from it.	If only a share is to be sold, the arrears due from it.
1	2	3	4	5	6	7	8	9
		Rs. A. P.				Rs. A. P.	Rs. A. P.	Rs. A. P.
813	Pargana Alti, tape Sahajahanpur.	.....	.....	Kismat 6a. 4p. 16kt. ... ... The remaining interest 9a. 7p. 4kt. in each of the mauzas of the estate is excluded from sale.	Babu Balaram Bhramerber Rai and others.	4,630 0 0	...	2,314 13 0
1313	Pargana Barnan, taluk Radhamohan Prasad.	.....	.....	Kismat 8a. 9p. 18kt. 15b. 16g. 3c. 3bed. The interest comprised in entire mauzas Dharpur, Saisindha, Narpur, Kabirpur, Maheswarpur, Uper Barnan, Nilkanthapur, Deulpara, Kakarikud, Bhagabatipur, Swainkhand, Meendha are excluded from sale.	Balaram Sahu and others.	4,069 4 0	.....	109 5 3
26	Pargana Jajpur, taluk Sunderpur.	1,698 5 9	Whole ...		Kangoi Dinabandhu Baliar Singh and others.	.....	396 7 5	.....
66	Pargana Jajpur, taluk Bhimkerpur.	.....	.....	13a. 9p. 17kt. 2b. excludes 2a. 2p. 2kt. 14b. in each of the mauzas of the estate.	Dasarathi Senapati and others.	665 2 8	...	164 14 3

Cuttack Collectorate, the 28th March 1905.

F. N. FISCHER, Collector.

Notification A.

NOTICE is hereby given, under sections 6 and 13, Act XI of 1859, that the undermentioned estates and shares of estates in the district of Jalpaiguri will be put up for sale at the office of the Collector of that district on the 20th May 1905 at 12 A. M. for arrears of revenue and other demands, which by law are realisable as arrears of land revenue.

When in columns 5, 7 and 9 of the appended statement it is stated that only a share is to be sold, it is to be understood that a separate account is kept for that share and that the other share or shares in the estate are excluded from the sale.

Tauzi No.	Name of mahal and pargana.	Sadar jama of whole estate.	Whether the whole estate is to be sold.	If only a share is to be sold, specification of such share or shares.	Names of proprietors of property to be sold.	If only a share is to be sold, the sadar jama of such share.	If the whole estate is to be sold, the arrears due from it.	If only a share is to be sold, the arrears due from it.
1	2	3	4	5	6	7	8	9
		Rs. A. P.					Rs. A. P.	
326	Bhutan-Duars, II, pargana Bhatibari.	768 2 0	Whole		The Ryduck Tea Syndicate, Limited	....	Land Revenue 363 4 0 Road and Public Works Cess 42 11 6 Dák cess 5 12 0 451 11 6	

Jalpaiguri, the 3rd April 1905.

J. F. GRUNING, Deputy Commissioner.

Notification A.

NOTICE is hereby given, under sections 6 and 13, Act XI of 1859, that the undermentioned estates and shares of estates in the district of Tippera will be put up for sale at the office of the Collector of that district on the 22nd May 1905 at 12 o'clock for arrears of revenue and other demands which by law are realizable as arrears of land revenue.

When in columns 5, 7 and 9 of the appended statement it is stated that only a share is to be sold, it is to be understood that a separate account is kept for that share.

Tauzi No.	Name of mahal and pargana.	Sadar jama of whole estate.	Whether the whole estate is to be sold.	If only a share is to be sold, specification of such share or shares.	Names of proprietors of property to be sold.	If only a share is to be sold, the sadar jama of such share.	If the whole estate is to be sold, the arrears due from it.	If only a share is to be sold, the arrears due from it.
1	2	3	4	5	6	7	8	9
		Rs. A. P.					Rs. A. P. KT.	
26	Bardakhat, hissa 1a. 6g. 2k. 1kt. 4dt. in pargana Bardakhat.	18,319 4 9	Whole ..	.	Krishun Mongal Pal Choudhury, Navo Kisore Roy, Mirza Mohmed Sadik *alias* Gozole Mirza, Kali Charan Saha and several others.		576 12 8 5½	.

Dated Comilla' the 12th April 1905.

H. M SCROOPE, Offg. Collector.

Notification B.

NOTICE is hereby given, under sections 5 and 13, Act XI of 1859, that unless the arrears mentioned below are paid on or before the next latest date of payment, viz., the 28th April 1905, the undermentioned estates or shares of estates in the district of Puri will be put up for sale at the office of the Collector of that district on the 10th July 1905 at 12 o'clock noon for the said arrears.

When in columns 5, 7 and 9 of the appended statement it is stated that only a share is to be sold, it is to be understood that a separate account is kept for that share and that the other share or shares in the estate not specifically mentioned in column 5 are excluded from the sale.

Tauzi No.	Name of mahal and pargana.	Sadar jama of whole estate.	Whether the whole estate is to be sold.	If only a share is to be sold, specification of such share or shares.	Names of proprietors of property to be sold.	If only a share is to be sold, the sadar jama of such share.	If the whole estate is to be sold, the arrears due from it.	If only a share is to be sold, the arrears due from it.	Nature and amount of demand for which to be sold.
1	2	3	4	5	6	7	8	9	10
		Rs. A. P.		A. P.		Rs. A. P.	Rs. A. P.	Rs. A. P.	
185 2	Killah Rupas, pargana Athais	1,[illegible] 0 0	.	Kismat 9 4	Trilochan Chaudhuri and others.	965 5 0	...	491 11 0	Due for last April 1905.
106 1	Ta. Ganeswarpur, pargana Banchas	1,619 0 0	.....	.. ... 9 0	Baladev Prakas Bramhachari.	910 11 0	.....	455 0 0	Ditto.
106 2	Ditto	1,619 0 0	..	.. ... 7 0	Chandra Moni Debya, mother and guardian of Hanuman Khentia.	708 5 0	.....	354 0 0	Ditto.
60	Ma. Durgadaspur, pargana Kotrahang.	679 0 0	Whole ...	.....	Raja Makund Dev		439 0 0	.....	Ditto.
79 6	Ma. Thanthana, pargana Kotrahang.	658 0 0	.	Kismat 13 0	Dinabandhu Pain, brother and guardian of Gopi Nath Pain and others.	530 0 0	.....	264 14 0	Ditto.
347 1	Ta. Amuri, pargana Purbadual.	1,216 0 0		.. ... 8 0	Nayanmali Jewadie, mother and guardian of Durga Charan Jagadeb Rai	608 0 0	.....	304 0 0	Ditto.
347 2	Ditto	1,216 0 0		8 0	Radha Mohan Rai	608 0 0	..	304 0 0	Ditto.

Puri Collectorate, the 7th April 1905.

J. R. BLACKWOOD, Collector.

Notice of Sale for Arrears of Revenue.

NOTICE is hereby given, under section 6, Act XI of 1859, read with Act VII (B.C.) of 1868 and Act II (B.C.) of 1871, that the undermentioned Noabad taluks within the Cox's Bazar khas mahal, in the district of Chittagong, will be put up to public and unreserved sale at the Collector's office of that district on the 28th April 1905 for arrears of rent and cesses remaining unpaid on the 25th February 1905 :—

No. of tenure.	Name of mauza, thana, and mahal	Name of Talukdar.	Sadar Jama.		Amount of arrears for which the tenure is to be sold.		
			Rent.	Cesses.	Rent.	Cesses.	Total.
1			Rs. A. P.	Rs. A. P.	Rs. A. P.	Rs. A. P.	Rs. A. P.
1261	Mauza Teknaf, thana Teknaf, taluk Fate Chowdhuri.	Khema Chowdhuri and Nhaboke Chowdhuri and others.	1 374 6 0	88 10 6	691 11 0	17 8 9	709 3 9
78	Mauza Patili Marhumkhali, thana Ramoo, taluk Shamadali.	Nur Mahammad	961 2 0	119 6 0	484 1 0	36 13 0	470 14 0
80	Mauza Kharulia, thana Ramoo, taluk Khayerullah.	Kamala Kanta Sen	676 6 0	69 13 0	233 10 3	23 6 0	276 16 3
103	Mauza Chakmookul, thana Ramoo, taluk Kaloo and Kamarali.	Jagat Chandra Bahaddar	1,206 13 0	114 7 6	534 0 0	38 3 0	Paid. 572 3 6
119	Mauza Nunachari, thana Ramoo, taluk Gour Sankar and Bodya Nath Kanungoe.	Golam Bari and Golam Kiberia and others.	803 1 9	73 11 6	203 4 0	34 8 0	246 13 9
203	Mauza Bharmabali, thana Ramoo, taluk Mahammad Raja.	Sm. Arapsamal herself and for her minor sons Abe, Ganojjama, Kamaljama and Manirajama and Sm. Golapera herself and her minor sons Farok Ahamad and others.	1,139 4 0	141 13 6	484 3 0	47 4 0	531 6 0
206	Mauza Jaurianala, thana Ramoo, taluk Golamali.	Akbar Kamal Chowdhuri	673 0 0	86 7 0	233 8 0	28 13 9	261 4 9
246	Mauza Manikpur, thana Chakaria, taluk Tholaforoo.	Sm. Dinendra Kumari	669 0 0	119 6 6	239 4 0	26 13 6	266 0 6
270	Mauza Bhoshamaikchar, thana Chakaria, taluk Bibi Sprak.	Asmat Ali and Jaha Bax	1,679 3 0	173 0 0	391 6 0	37 13 0	429 3 0
286	Mauza Pahorchanda, thana Chakaria, taluk Bibi Sprak.	Bani Madhab Sen	1,269 3 0	149 12 6	743 1 10	49 14 10	793 0 8
288	Mauza Toitong, thana Chakaria, taluk Haridas Bahaddar, Har Chandra and Nabin Chandra.	Nezamat Ali Chowdhuri	1,433 14 0	191 6 6	539 9 0	65 13 6	609 3 6
289	Mauza Battali, thana Chakaria, taluk Hari Dass Bahaddar.	Nezamat Ali	803 4 0	44 4 0	193 11 0	14 13 0	208 7 0
295	Mauza Rajarbali, thana Chakaria, taluk Bibi Sprak.	Nezamat Ali Chowdhuri	1,666 13 0	213 13 6	497 11 9	136 10 6	634 10 3
315	Mauza Patali, Marhumkhali, thana Ramoo, Benam. Sm. Maymuna Khatun and Khorshed Ali.	Sm. Maymuna Khatun Chowdhurin and Khorshed Ali Chowdhuri.	614 6 0	19 3 6	3,280 10 0	97 10 6	3,280 4 6

The 15th March 1905. F. P. DIXON, Collector.

Notice of Sale for Arrears of Revenue.

NOTICE is hereby given, under section 6, Act XI of 1859, read with Act VII (B.C.) of 1868 and Act II (B.C.) of 1871, that the undermentioned Noabad taluks within the Sadar khas mahal, in the district of Chittagong, will be put up to public and unreserved sale at the Collector's office at that district on the 27th day of April 1905 for arrears of rent and cesses remaining unpaid on the 25th February 1905.

No. of taluk.	Name of taluk with its situation.	Name of proprietor.	Sadar Jama.		Arrear.	
			Rent.	Cess.	Rent.	Cess.
636			Rs. A. P.	Rs. A. P.	Rs. A. P.	Rs. A. P.
6787	Mauza Fakeria, thana Town, mahal Noabad, taluk Ahamad Ali.	Abdul Rahaman and others	1,226 4 0	226 8 0	464 13 0	69 7 0
6877	Mauza Jujkhola, thana Patiharry, mahal Noabad, taluk Bar Ali Khan.	Obedar Rahaman Khan	1,226 4 0	168 13 0	266 8 0	48 13 9
6871	Mauza Bhowjpur, thana Patiharry, mahal Noabad, taluk Bar Ali Khan.	Nipendharman Raja	706 6 0	38 13 0	268 10 0	13 13 3

The 14th March 1905. F. P DIXON, Collector.

Notice of Sale for Arrears of Revenue.

NOTICE is hereby given, under section 6, Act XI of 1859, read with Act VII (B.C.) of 1868 and Act II (B.C.) of 1871, that the undermentioned Noabad taluks within the Patia khas mahal, in the district of Chittagong, will be put up to public and unreserved sale at the Collector's office of that district on the 26th April 1905, for arrears and cesses remaining unpaid on the 25th February 1905:—

No. of tenure.	Name of mauza, thana and mahal.	Name of Talukdar.	Sadar Jama.		Amount of arrear for which the tenure is to be sold.		
			Rent.	Cesses.	Rent.	Cesses.	Total.
			Rs. A. P.	Rs. A. P.	Rs. A. P.	Rs. A. P.	Rs. A. P.
14141/19387	Thana Patia, mauza Charichanagar, mahal Noabad, taluk Ochman Sadagar, Eakup.	Raj Chandra Sen, son of Ram Kishore Sen of Sanhara and Shariatulla Sadadar.	520 0 0	14 13 0	195 2 0	5 9 0	200 11 0

The 14th March 1905. F. P. DIXON, Collector.

Notice of Sale for Arrears of Revenue.

NOTICE is hereby given, under section 6, Act XI of 1859, read with Act VII (B.C.) of 1868 and Act II (B C.) of 1871, that the undermentioned Noabad taluk, within the Raozan khas mahal, in the district of Chittagong, will be put up to public and unreserved sale at the Collector's office of that district on the 26th April 1905 for arrears of rent and cesses remaining unpaid on the 25th day of February 1905:—

No. of taluk.	Name of taluk with its situation.	Name of proprietor.	Sadar Jama.		Amount of arrears for which the taluk is to be sold.		
			Rent.	Cesses.	Rent.	Cesses.	Total.
			Rs. A. P.	Rs. A. P.	Rs. A. P.	Rs. A. P.	Rs. A. P.
1/[illegible]	Thana Fatikchery, mauza Hapania, mahal Noabad, taluk Farad Jafar.	Nepruchain Mung Raja, son of Mathu Chowdhuri, of Manikchery, in Hill Tract, Chittagong.	394 10 6	67 9 6	446 10 6	25 9 0	472 3 6

Chittagong Collectorate, the 14th March 1905. F. P. DIXON, Collector.

Notice of Sale for Arrears of Revenue.

NOTICE is hereby given, under section 6, Act XI of 1859, Act VII (B.C.) of 1868 and Act II (B.C.) of 1871, that the undermentioned tenures in the Satkania khas mahal, in the district of Chittagong, will be put up to public and unreserved sale at the Collector's office of that district on the 27th day of April 1905 for arrears of rent and cesses remaining unpaid on the 25th February 1905.

No. of tenure.	Name of tenure with its situation.	Name of proprietor.	Annual Jama.		Amount of arrears for which the tenure is to be sold.		
			Rent.	Cesses.	Rent.	Cesses.	Total.
			Rs. A. P.	Rs. A. P.	Rs. A. P.	Rs. A. P.	Rs. A. P.
[illegible]	Thana Satkania, at present Banskhali, mauza Nakora, mahal Noabad, hal taluk Raj Kumar Roy.	Mohesh Chandra Bhattacherji ...	1,139 9 0	127 6 6	157 2 6	17 10 6	174 13 6
17/[illegible]	Thana Banskhali, mauza Chambal, mahal Noabad, taluk Tajanessa.	Sm. Jobeda Khatoon herself and on behalf of minor sons Abdul Karim, Abdul Rahim, Abdul Salim and Abdul Khalek and daughter Sm. Jalloot Khatoon.	1,954 4 0	161 9 6	732 14 0	60 9 6	793 7 6
5415/[illegible]	Thana Satkania, mauza Barohatia, mahal Noabad, taluk Lal Mahomed Daroga.	Girija Kripa Lala and Sarada Kripa Lala.	1,068 12 0	101 13 5	395 11 6	38 3 3	433 14 9
[illegible]	Thana Satkania, mauza Chunate, mahal Noabad, taluk Fazarali Khan.	Salamat Ali Khan and Srimati Asharaf Bibee.	397 2 0	28 4 0	338 11 6	8 5 6	347 1 0

Chittagong Collectorate, the 14th March 1905. F. P DIXON, Collector.

Advertisement of Sale.

NOTICE is hereby given that the undermentioned plots of land, no longer required by Government, situated on the Moghalserai-Gaya Railway, in the district of Gaya, will be put up for sale at 12 o'clock noon on Friday, the 2nd June 1905, corresponding to the 14th Jeth 1312 Fusli, at the Court of the Collector of Gaya.

The purchasers of the several plots of land will be subject to the following conditions:—

1st.—The purchasers will have no power to make any excavation on the land nearer than 15 feet from the Railway fencing, or plough the land closer than three feet from its foundation.

2nd.—If the amount of purchase-money does not exceed Rs. 100, the whole amount must be paid down at once.

3rd.—If the amount of purchase-money exceed Rs. 100, one-fourth of the amount must be immediately deposited. If the balance be not paid by noon of the fifteenth day after the sale, reckoning the sale day as one, or if that day be a close holiday, then by noon of the first succeeding office day, the sale shall be cancelled, the sum deposited being forfeited to Government, and the lot again put up for sale at the risk of the defaulting purchaser, after issue of advertisement, as in the case of the original sale.

4th.—The plots of the land will be sold revenue-free to the highest bidders.

5th.—The purchasers shall be put in possession on receipt by the Collector of the orders of the Board confirming the sale.

Consecutive lot No.	Name of district.	Pargana and mauza.	Number of mile on which the land is situated.	Situated on which side of the railway.	Approximate area.	Land excluded from sale.	Commencement and termination of lot.	Boundary of lot.
					B. K. D.			
I	Gaya ...	Mauza Jamore, pargana Siris.	44th	On the south of the Railway line.	05 8 0	Nil	Nil	*North.*—Main line of Moghalserai-Gaya Railway. *South.*—Village Jianbigha. *East.*—Lands of village Jamore. *West.*—River Baltena.
II	Do. ...	Abdulpore, pargana Charkawan.	36th	On the south and north of the Railway line.	16 13 0	Nil	1 & 2	1st lot bounded on the— *North.*—By the main line of the Moghalserai-Gaya Railway. *South and east.*—By the lands of village Abdulpore. *West.*—By river Dhodai. 2nd lot on the— *North.*—By the lands of village Abdulpore. *South.*—By the main line of the Moghalserai-Gaya Railway. *East.*—By the lands of village Abdulpore. *West.*—By river Dhawar.
III	Do. ...	Kowna, pargana Kabar.	15th	On the south of the Railway line.	5 16 2	Nil	Nil	*North.*—Nara Nadi. *South, east and west.*—By lands of village Kowna.
IV	Do. ...	Jamalpore (Azmatganj), pargana Kabar.	11th	On the north of the Railway line.	4 0 4	Nil	Nil	*North, west and east.*—By the lands of village Azmatganj. *South.*—By main line.
V	Do. ...	Sahhawa, pargana Dakhmer.	9th & 10th	On the south of the Railway.	25 17 12	Nil	Nil	*North.*—Lands of village Sahhawa. *South.*—Main line of the Moghalserai-Gaya Railway. *East.*—Lands of Sahhawar and Dakhmer *West.*—Lands of Sahhawar.

Gaya, the 12th April 1904.

SHAMSUDDIN HYDER, *for* Collector.

Advertisement of Sale.

NOTICE is hereby given that the undermentioned plots of land, no longer required by Government, situated along the Chowrashi Branch of the Bengal-Nagpur Railway, in the district of Manbhum, will be put up to sale at 4 P.M. on Thursday, the 8th June 1905, corresponding to the 25th Jaista 1312 B.S., at Ramkanali station of the Bengal-Nagpur Railway.

The purchasers of the several plots of land will be subject to the following conditions:—

1st.—The purchasers will have no power to make any excavations on the land nearer than fifteen feet from the Railway boundary, or to plough the land nearer than three feet from the same.

2nd.—If the amount of purchase-money does not exceed Rs. 100, the whole amount must be paid down at once.

3rd.—If the amount of purchase-money exceeds Rs. 100, one-fourth of the amount must be immediately deposited. If the balance be not paid by noon of the fifteenth day after the sale, reckoning the day of sale as one, or if that day be a close holiday, then by noon of the first succeeding office day, the sale shall be cancelled, the sum deposited being forfeited to Government, and the lot again put up for sale at the risk of the defaulting purchaser, after issue of advertisement, as in the case of original sale.

4th.—The plots of land will be sold revenue-free to the highest bidders.

5th.—The purchasers shall be put in possession on receipt by the Collector of the orders of the Board confirming the sale.

Consecutive lot No.	Name of district.	Pargana and mauza.	Number of mile on which land is situate.	Situated on which side of the railway.	Approximate area of lot in bighas and in acres.	
					B. K. C.	A. R. P.
1 and 2	Manbhum ..	Pargana Chowrashi, villages Nodiha and Narainpur.	8	On the north side of the railway line.	27 9 6·01	9 0 12·73

GANGA CHARAN CHATTERJEE, Collector under Act I of 1894, Burdwan and Manbhum.

Land Acquisition Office, Burdwan and Manbhum, the 16th April 1905.

Statement of Government Promissory Notes enfaced for payment of Interest in London, under deduction of amount retransferred to India, and outstanding in the books of the Bank of Bengal on the 15th April 1905.

PARTICULARS.	3 per cent. of 1896-97.	3½ PER CENT. LOANS— Of 1842-43.	Of 1854-55.	Of 1865.	Of 1879.	Of 1893-94.	Of 1900-01.	Total.	4 PER CENT. LOANS— Of 1832-33.	Of 1835-36.	Of 1842-43.	Of 1854-55.	Transfer of 1865.	Reduced 4 per cent. loan of 1879.	Total.	4½ PER CENT. LOANS— Of 1879.		Transfer loan of 1879, 4½ per cent. portion.	Total.	GRAND TOTAL.
Balance of 31st March 1905 ...	98,70,000	1,61,32,100	10,53,50,500	2,23,69,000	1,24,12,700	.....	24,27,700	15,86,82,000	6,934	5,000	.....	3,500	40,800	2,500	58,734	5,000	...	29,500	34,500	16,51,55,234
ADD—																				
Amount of transferred to in London	.....	.....	.....	.....	.....	.....	.....	.....	.....	.....	.....	.....	.....	.....	.....	.....	...	.....	.....	.....
Amount enfaced at Madras up to 23rd March 1905 ...	.....	.....		1,500	.....	.....	.....	1,500	.....	.....	.....	.....	.....	.....	.....	.....	...	.....	.....	1,500
Amount enfaced at Bombay up to 1st April 1905	.....	.....	5,14,000	.....	.....	.....	.....	5,14,000	.....	.....	.....	.....	.....	.....	.....	.....	...	.....	.....	5,14,000
Amount enfaced at Calcutta between 1st and 15th April 1905	.....	43,700	7,90,100	33,800	6,500	.....	1,000	8,79,300	.....	.....	.....	.....	.....	.....	.....	.....	...	.....	.....	8,79,300
	98,70,000	1,61,75,800	10,66,54,600	2,24,08,500	1,24,19,200	.....	24,28,700	16,00,86,800	6,934	5,000	.....	3,500	40,800	2,500	58,734	5,000	...	29,500	34,500	16,95,80,034
DEDUCT—																				
Amount written off in the London registers ...	12,000	.....	2,000	5,000	.....	.....	76,000	83,000	.....	.....	.....	.....	.....	.....	.....	.....	...	.....	.....	95,000
Balance on 15th April 1905 ...	98,58,000	1,61,75,800	10,66,52,600	2,24,08,500	1,24,19,200	.....	23,52,700	16,00,08,800	6,934	5,000	.....	3,500	40,800	2,500	58,734	5,000	...	29,500	34,500	16,94,55,034

NOTE.—From 9th June 1897 to 15th Feb. 1905—Enfaced from India, 11,328 lakhs; retransferred from London, 11,080 lakhs.
" 16th Feb. 1905 " 28th " " " " " 5 " " " " 3 "
" 1st Mar. " " 15th Mar. " " " " 19 " " " " 2 "
" 16th " " " 31st " " " " " 16 " " " " 2 "
" 1st April " " 15th April " " " " 14 " " " " 1 "

11,382 " 11,038 "
11,038 "

Balance against India 344 "

J. GRAVES,
Offg. Superintendent.

W. D. CRUICKSHANK,
Secretary and Treasurer.

(448—1)

PUBLIC DEBT OFFICE, BANK OF BENGAL,
Calcutta, 18th April 1905.

Statement of the Affairs of the Bank of Bengal for the week ending 11th April 1905.

LIABILITIES.

	Rs.	A.	P.
Capital paid up	2,00,00,000	0	0
Reserve Fund	1,32,00,000	0	0
Public Deposits at Head Office Rs. 72,42,579 15 3			
Ditto ditto at Branches „ 1,38,08,344 4 6	2,10,50,924	3	9
Other Deposits at Head Office and Branches	10,85,86,807	9	2
Bank Post Bills, &c.	11,40,179	0	6
Sundries	29,13,123	3	1
Rupees	16,68,90,534	0	6

ASSETS.

	Rs.	A.	P.
Government securities	1,35,32,074	1	11
Other authorised investments	77,17,353	13	8
Loans on Government and other authorised securities	3,46,21,250	2	6
Accounts of credit on ditto ditto	1,94,45,970	14	8
Bills discounted and purchased	3,45,31,946	9	10
Balances with other Banks	17,98,630	0	11
Bullion	.....		
Dead Stock	13,44,016	3	4
Stamps	13,700	11	3
Sundries	13,86,185	5	0
	11,48,41,127	15	1
Cash & Currency Notes at Head Office* Rs. 2,86,38,262 8 3			
Cash & Currency Notes at Branches† „ 2,34,11,143 9 2	5,20,49,406	1	5
Rupees	16,68,90,534	0	6

* Includes Govt. & ₹ Govt., value Rs. 2,41,215 0 0
† Do. do. do. „ 2,40,667 8 0
Rs. 4,81,882 8 0

By order of the Directors.

BANK OF BENGAL,
Calcutta, 14th April 1905.

H. TREBLE, Offg. Chief Accountant.
Rate for Demand Loans, 5 per cent.
Percentage 38·98.

W. D. CRUICKSHANK,
Secretary and Treasurer.
(418—1)

THE following property will be sold at the Subordinate Judge's 1st Court, Monghyr, at 12 o'clock on the 29th April 1905 :—

For sale.—Nine annas 8 gundas out of 2 annas 19 gundas pokhta of 16 annas of mauza Chak, original with dependency, together with khudkast lands, pargana Balia, district Monghyr, putti Gair Sael, bearing tauzi No. 616 and belonging to the estate Geo. Thomas.

Name of village.	Pargana.	District.	Tauzi No.	Government revenue.	Income.
				Rs. A.	Rs.
Chak	Balia ...	Monghyr ...	616	322 15	767

Monghyr, the 13th April 1905. (415—1—258) L. O'REILLY, Receiver, Estate Geo. Thomas.

SALE PROCLAMATION.

In the Court of Babu Nundo Lal Dey, Subordinate Judge, 1st Court, Bhagalpur.

EXECUTION CASE No. 539 OF 1904.

Ramni Mohun Singh and another, decree-holders, *versus* Nund Kishore Lal Tewari and others, judgment-debtors.

THE following property shall be sold by the Nazir of the District Court on the 1st May 1905 at 12 noon for the realisation of Rs. 40,332-13-3 :—

Sixteen annas of mahal Mahhsuspur Khurd, asli and dakhli, pargana Colgong, No. 272 tauzi and sadar jama Rs. 1,497-12, estimated value Rs. 25,000.

NUNDO LAL DEY, Subordinate Judge.

Bhagalpur, the 10th April 1905. (409—1)

SALE PROCLAMATION.

In the Court of the Subordinate Judge, 1st Court, Bhagalpur.

EXECUTION CASE No. 99 OF 1905.

Babu Deep Narain Singh, decree-holder, *versus* Mussammat Dhirajbutty, judgment-debtor.

THE following property shall be sold by the Nazir of the District Court on the 15th May 1905 at 12 noon for the realisation of Rs. 16,395-9-2 :—

Sixteen annas of mauzas Rasoolpur, Sunderpur, Goosolpur and Rampur, asli and dakhli, pargana Bhagalpur, No. 3210 tauzi and sadar jama Rs. 717-8, estimated value Rs. 10,000.

NUNDO LAL DEY, Subordinate Judge.

Bhagalpur, the 12th April 1905. (411—1)

SUMMONS FOR FINAL DISPOSAL OF SUIT.

Sections 64 and 68 of the Code of Civil Procedure

In the Court of Small Causes at Amritsar.

CIVIL SUIT No. 1343 OF 1905.

Lachman Das and Behari Lal, of Amritsar, plaintiffs, *against* Jai Narain and Lachmi Narain, of Calcutta, defendants.

To Jai Narain and Lachmi Narain, dwelling at Calcutta.

WHEREAS plaintiffs have instituted a suit against you for Rs. 197-12, you are hereby summoned to appear in this Court in person or by a duly authorised pleader of the Court duly instructed and able to answer all material questions relating to the suit, or who shall be accompanied by some other person able to answer all such questions, on Monday, the 8th day of May 1905, at 10 o'clock in the forenoon to answer the abovenamed plaintiffs; and as the day fixed for your appearance is appointed for the final disposal of the suit, you must be prepared to produce all your witnesses on that day; and you are hereby required to take notice that, in default of your appearance on the day before-mentioned, the suit will be heard and determined in your absence; and you will bring with you or send by your pleader, which the plaintiffs desire to inspect, and any documents on which you intend to rely in support of your defence.

Given under my hand and the seal of the Court this 8th day of April 1905.

LALA DIWAN CHAND,
Judge, Small Cause Court.

NOTE.—As the summons could not be served in the ordinary way, hence it is notified under section 69 of the Civil Procedure Code.

(413—1)

In the Court of the District Judge of Rajshahi.

EXECUTION CASE No. 9 of 1903.

Braja Lal Maitra, decree-holder, *versus* Tara Khatun, widow of late Nur Mohammed Khan Chowdhuri of Nator and others, judgment-debtor.

NOTICE is hereby given that the right, title and interest of the judgment-debtors in the undermentioned property will be sold by the Nasir of the District Judge's Court, Rajshahi, on the 16th day of May 1905, at 12 o'clock, in the District Judge's Court-house at Rajshahi for the realization of Rs. 4,951-3-3:—

Three annas 15 gandas 1 kara 1 kranti and 8 danti share of Dihi Kholabaria comprised in tappa Chapaila bearing tauzi No 432 of the Rajshahi Collectorate within thana and sub-registry Office of Nator, annual revenue payable to Government on account of the entire 16 annas share of Dihi Kholabaria including police cess is Rs. 2,944-6.

The approximate value of the property is Rs. 1,000.

S. N. HUDA, District Judge.

Judge's Office, Rajshahi, the 15th April 1905.

(419—1)

Notification.

TO be peremptorily sold by the Registrar of the High Court of Judicature at Fort William in Bengal in its Ordinary Original Civil Jurisdiction in his sale-room in the Court-house on Saturday, the 6th day of May 1905, at the hour of 12 o'clock noon, pursuant to a decree and order of the said Court made in suit No. 179 of 1903 (wherein Sreemutty Ushangini Debi and another are plaintiffs and Sreemutty Chintamony Dasi is the defendant), and dated, respectively, the 28th day of May 1903 and the 22nd day of July 1904, the undermentioned property:—

All that two-storied brick-built dwelling-house, situate, lying at and being premises No. 4 Issur Thacoor's Lane, with land containing by estimation 2 cottahs and 5 chittaks, more or less, in Sootanuty in the north division of the town of Calcutta, and bounded on the north by the dwelling-house of Surya Coomar Patra, on the west by Issur Thacoor's Lane, on the south by the tenanted land of Ramanando Pal, and on the east by the dwelling-house of Ramanando Pal.

The abstract of title and conditions of sale may be seen at the Registrar's office in the High Court and also at the office of Babu Bhupendra Nath Basu, Solicitor, at No. 10 Hastings Street, on any day before the sale and will be produced at the sale.

W. R. FINK, Registrar.

Bhupendra Nath Basu, Plaintiff's Attorney.

Calcutta High Court, Original Side, the 29th day of March 1905. (388—1—253)

Notification.

TO be peremptorily sold, pursuant to a decree and order of the High Court at Calcutta, Original Side, made in suit No. 323 of 1901 (wherein Bullodeb Doss Khettry and another are plaintiffs and Nil Kanta Ganguly is defendant), and dated, respectively, the 8th July 1901 and 2nd September 1903, by the Registrar of the said Court in his sale-room in the Court-house on Saturday, the 13th May 1905, at 12 o'clock noon, the following property of the defendant, viz.—

Lot I.—No. 21 Bulloram Dey's Street, being a two-storied brick-built dwelling-house and the rent-free land thereto belonging, containing by estimation 1 cottah and 10 chittaks, more or less, in sootanooty, in the north division of the town of Calcutta, and bounded on the north by Bulloram Dey's Street, on the east partly by the house of Money Bewah, partly by the house of Gangamoney Bewah, and partly by the tenanted house of Kaloo Mullick, on the south partly by the dwelling house of Madhusuddan Sett and partly by the dwelling-house of Nilmoney Mookerjee, and on the west by the tenanted house of the estate of Madhusudan Sett, deceased.

The abstract of title and the conditions of sale may be seen at the office of the said Registrar in the Court-house, or at No. 2 Old Post Office Street, the office of Messrs. G. C. Chunder & Co., the plaintiffs' Attorneys, on any day before the sale and will be produced at the sale.

W. R. FINK, Registrar.

G. C. Chunder & Co., Plaintiffs' Attorneys.

High Court, Original Side, Calcutta, the 31st March 1905. (389—1—282)

Corporation of Calcutta.

THE General Committee having previously given notice of their intention and no objection having been received within one month from the date of the publication of such notice, hereby under section 350 (4) of the Calcutta Municipal Act of 1899, define the general line of buildings on each side of Kurrya Gorristhan Road leading from Lower Circular Road to the Scotch Cemetery in accordance with the plan approved by the General Committee on the 13th January 1905.

E. T. GLYNN,
Chairman of the Corporation.

Municipal Office, dated the 14th April 1905.

(423—1)

Notice.

PURSUANT to section 76 of the Merchant Shipping Act, VII of 1880, notice is hereby given that the undermentioned gear and wreckage of the late Native vessel "Ganja Padrath" landed by the crew of the said "Ganja Padrath" on the 4th November 1904, are now at Hukitola False Point Port. Persons having claims to them should come to Hukitola False Point, and receive them after paying ware-house charges to the Receiver of Wrecks, Orissa, within one month from the date of publication of this notice, otherwise they will be put to public auction as they are of a perishable nature.

List of articles saved from the wrecked ship "Ganja Padrath" in November 1904.

Articles.	Quantity.
	No.
Oars	4
Yard arm	4
Blocks (single wood)	6
Do. (double wood)	4
Do. (single iron)	1
Do. (quadruple wood)	1
Hawser	1
Sheaves	4
Sail and jib	6
Tarpaulin	1
Tiller and seat	1
Yard of four pieces	1
Spears	2
Anchors	2
One box containing compass ...	1
Bell	1
Globe (lantern)	1
	Bundles.
Twine serving	3
	No.
Fog signal	1
Lead line	1
Buckets (leather)	2
One bag containing top sail ...	1
Mast	1 at Jambu

W. G. MATSTON,
Port Officer of Cuttack and Balasore Ports, and Receiver of Wrecks, Orissa Ports.

The 29th March 1905.

Notice

IS hereby given that there are in this office several documents, filed as exhibits in various cases of old dates, the records of which cannot now be traced. They will be destroyed after a month if claimants do not appear. The documents are on view at the Record-room.

D. H. KINGSFORD,
Chief Presidency Magistrate, Calcutta.

The 14th April 1905.

The Commissioners for the Port of Chittagong.

NOTIFICATION.

THE following revised scale of charges proposed by the Commissioners for the supply of water to the shipping and approved by the Local Government in letter No. 641 Marine, dated the 7th April 1905, as a temporary measure, is published for general information in accordance with the provisions of section 33 of the Chittagong Port Commissioners Act, IV (Bengal) of 1887 :—

	Rs
For any quantity not exceeding 1,000 gallons	10
For any quantity exceeding 1,000 gallons, per 1,000 gallons, or part thereof	10

W. MAUDE,
Chairman of the Port Commissioners.

Chittagong, the 15th April 1905. (421—3)

INCOME-TAX NOTICE.

THE persons named in the list, which is open for inspection at the Income-Tax Office, No. 3 Charnock Place, Calcutta, are hereby informed that they have been assessed under Part IV of the Second Schedule of Act II of 1886 for the financial year 1905-06 according to the particulars specified therein, and they are hereby required to pay the amount of the tax to the Treasury Officer within sixty days from the date hereof, or to apply to me within thirty days from such date to have the assessment reduced or cancelled, failing which they will be proceeded against as the law provides.

G. GIBARD,
Collector of Income-Tax.

Income Tax Office; No. 3 Charnock Place, Calcutta, the 1st April 1905.

Wanted

A MUHARRIR on a salary of Rs. 20 rising by biennial increments to Rs. 30 for the settlement work of this Collectorate. He should be well up in accounts and correspondence work and must know the vernaculars of the district. Applications will be received up to 28th instant.

C. A. OLDHAM, Collector.

Monghyr, the 11th April 1905.

Wanted

HEAD CLERK, permanent, for Hooghly Collectorate, pay Rs. 80.

Must be thoroughly experienced in Collectorate work Apply before 30th April.

H. D. CARRY, Collector.

Chinsura, the 17th April 1905.

Wanted

AN experienced Overseer for the Muzaffarpur District Board on a salary of Rs. 80 rising to Rs. 100 by biennial increments of Rs 4 and travelling allowance of Rs. 30 per mensem. The candidates must be qualified under Bengal Government Notification No. 3334L.S. G., dated the 20th December 1901. Applications with copies of certificates will be received by the District Engineer up to 30th April 1905

(413—3)

Notification.

WANTED an experienced Sub-Overseer for the Wards and Encumbered Estates, Ranchi. Pay Rs 35 plus horse allowance of Rs 15 a month. None need apply who is not qualified under Bengal Government Notification No 3334L.S.-G., dated 20th December 1901.

Applications will be received by the undersigned up to 25th instant.

ASHUTOSH MUKHERJI,
General Manager, Wards and Encumbered Estates, Ranchi.

Ranchi, the 11th April 1905. (414—2)

Notice.

WANTED an Accountant for District Engineer's Office of the Hazaribagh District Board on a monthly salary of Rs. 50. No one need apply who is not a passed Accountant. Preference will be given to those who have experience of District Engineer's accounts. Applications will be received by the undersigned up to the 1st May next.

H. F. E B. FOSTER,
for Chairman, District Board.

Hazaribagh, the 12th April 1905. (416—3)

Notice.

WANTED an Assistant Sub Inspector of Schools on Rs. 30 per month and another on Rs. 40 per month with prospect of gradual promotion to Sub-Inspectorships on Rs. 50, Rs. 60 and Rs 75 per month, and with consolidated travelling allowance of Rs. 15 a month each.

The candidates are referred to the rules for the appointment of Sub-Inspectors.

Applications with copies of testimonials will be received by the undersigned up to 1st May 1905.

H. F. E. B. FOSTER,
for Chairman, District Board.

Hazaribagh, the 13th April 1905. (417—2)

Notice.

WANTED a Compositor for the Saran District Board Press. Salary Rs. 25 a month rising to Rs 30 by periodical increments. No one need apply who has not experience in Press work The applications will be received by the undersigned on or before the 6th May 1905.

JAGDAM SAHAI,
Vice-Chairman, District Board, Saran.

Chapra, the 15th April 1905. (420—3)

WANTED temporarily for six months a Head Computor for the Area section of the Bamanghatti settlement, Mourbhanj State, on a salary of Rs. 35 per mensem. None need apply who has no practical experience in the work and does not at all know English. Applications with copies of testimonials will be received by the undersigned up to the end of April 1905.

S. K. CHATURJEE,
Settlement Officer, subdivision Bamanghatti, State Mourbhanj,
Post Office Bahalda, Orissa.

Bahalda, the 14th April 1905. (422—2)

WANTED Head Clerk for Arambagh subdivision, district Hooghly. To act for two years Cash security required Rs. 500. Apply up to 24th April to

H. D. CARRY, Collector, Hooghly

Hooghly Collectorate, the 10th April 1905.

Notice.

WANTED for the office of the Superintending Engineer, Northern Circle, in Darjeeling, a well-qualified and experienced Estimating Assistant; one with a practical knowledge of construction of roads and buildings preferred.

2. Salary Rs. 80 rising to Rs. 120 by biennial increments of Rs. 8 *plus* hill allowance at 25 per cent. on pay drawn.

3 The selected candidate will be appointed on probation for three months before being confirmed.

4. Applications with copies of testimonials will be received by the undersigned up to the 20th April 1905.

B K. FINNIMORE,
Superintending Engineer, Northern Circle.

Darjeeling, the 3rd April 1905.

Notice.

IN the office of the Board of Revenue, Lower Provinces there are two vacancies for Europeans or Eurasians—one on a salary of Rs. 75, rising by annual increments of Rs. 10, to Rs. 125 per mensem, and the other on Rs. 40, rising by annual increments of Rs. 4, to Rs 60 per mensem.

Applications will be received by the undersigned up to the 22nd April 1905

Any applicant who is not on the list of successful candidates at the Clerical Service Examination, and who is not already in Government service, must satisfy the following conditions, viz., that he—

(a) is not less than 18 and not more than 25 years of age;

(b) produces satisfactory evidence that he has passed the F A. Examination, the High School Pass or the Senior Cambridge Local Examination;

(c) produces similar evidence that he is of good moral character; and

(d) produces a certificate from a Government Medical Officer, of or above the rank of Captain, to the effect that he is in good health and of sound constitution

Preference will be given to applicants who have a knowledge of shorthand.

The selected candidates will be on probation for twelve months.

H. F. SAMMAN, Secretary.

Calcutta, 2 Bankshall Street, the 7th April 1905.

Notice.

WANTED an active and experienced Road Overseer for the Garo Hills district. Salary Rs. 70 rising to Rs. 90 by annual increments of Rs. 2 and horse allowance of Rs. 20 per mensem. Nobody need apply who does not possess at least an Overseer's certificate from an Indian Engineering College.

Applications will be received by the undersigned up to 30th April 1905.

The post is not pensionable.

A. PLAYFAIR, CAPT., I A.,
Deputy Commissioner, Garo Hills, Assam.

Tura, the 6th April 1905

Wanted

A CLERK on Rs 50—5—75 for the office of the Director, Agricultural Research Institute, Pusa, Bengal.

Only thoroughly competent and experienced men with extensive knowledge of *accounts* and correspondence work in Government offices need apply.

Applications with copies of testimonials will be received by the undersigned up to the 24th April 1905.

The selected candidate will have to furnish a security deposit of Rs. 500 either in cash or in Government Promissory Notes.

B. COVENTRY,
Director, Agricultural Research Institute,
Pusa, Bengal.

Pusa, the 8th April 1905.

Wanted

A CLERK on Rs. 30—4—50 for the office of the Director, Agricultural Research Institute, Pusa, Bengal.

Applications for the post are invited from those who have at least passed the Entrance Examination, have a thorough knowledge of correspondence work in Government offices and know type-writing.

Applications with copies of testimonials will be received by the undersigned up to the 24th April 1905.

B. COVENTRY,
Director, Agricultural Research Institute,
Pusa, Bengal.

Pusa, the 8th April 1905.

Wanted

A CASHIER AND ACCOUNTANT for the office of the Agri-Horticulturist, Agricultural Research Institute, Pusa, on Rs. 30—4—50 per mensem.

Preference will be given to the candidate who has at least passed the Entrance Examination and has previous experience of the work in Government offices.

The selected candidate will have to furnish a security deposit of Rs. 500 either in cash or in Government Promissory Notes.

Applications with copies of testimonials will be received by the undersigned up to the 24th April 1905.

B. COVENTRY,
Director, Agricultural Research Institute,
Pusa, Bengal.

Pusa, the 8th April 1905.

Wanted

AN experienced Sub-Overseer for the Muzaffarpur District Board on a salary of Rs. 35 rising to Rs. 50 by biennial increment of Rs. 3 and travelling allowance of Rs. 15 per month. The candidate must be qualified under Bengal Government Notification No. 3334L S.-G., dated the 20th December 1901. Applications with copies of certificates will be received by the District Engineer, Muzaffarpur, up to the 25th April 1905

(393—2)

Notice

IS hereby given that the premises No. 38 Dhurmotollah Lane, Sulkea, will be sold by public auction, under the provisions of section 361 of the Bengal Municipal Act, on Friday, the 19th May 1905, between the hours of 2 and 5 P.M. by the Vice-Chairman on the spot.

(404—2—248)

GIRINDRA SIRCAR, M.A., B.L., intends to be enrolled as a Vakil of the High Court, Calcutta.

(383—4—233)

Notice.

BABU GUNADA CHARAN SEN, M.A. B.L., Pleader, Barisal, intends to be enrolled as a Vakil of the High Court.

(372—4—239)

SARAT CHANDRA SANYAL, M.A., B.L., Pleader, intends to be enrolled as a Vakil, High Court, Calcutta. (400—4—247)

NRIPENDRA NATH SIRCAR, M.A., B.L., intends to be enrolled as a Vakil, High Court, Calcutta.

(443—4—255)

Lost.

THE Government Promissory Note No. 048560 of the 3½ per cent. loan of 1854-55 for Rs. 500, originally standing in the name of Haridas Sreemany, and last endorsed to Srimatti Prosonnomoyee Dassee, the proprietress, by whom it was never endorsed to any other person, having been lost, notice is hereby given that payment of the above Note and the interest thereupon have been stopped at the Public Debt Office, Bank of Bengal, Calcutta, and that application is about to be made for the issue of duplicate in favour of the proprietress. The public are cautioned against purchasing or otherwise dealing with the abovementioned security.

Name of the Advertiser—Messrs. B. N. Basu & Co., Attorneys for Srimatti Prosonnomoyee Dassee.

Residence—10 Hastings Street, Calcutta.

(397—3—250)

Dessai and Parbuttia Tea Co., Ld.

NOTICE.

THE Half-yearly Ordinary General Meeting of the Shareholders will be held at the Registered Office of the Company, No. 100 Clive Street, on Friday, the 28th April 1905, at 4 P.M., for the purpose of receiving the Directors' report, passing the accounts for season 1904, and transacting such business as may be brought forward.

Transfer books will be closed from 15th to 30th April inclusive

By order,

GEO. HENDERSON & Co.,

Secretaries.

Calcutta, the 8th April 1905. (406—2—254)

Notice to Creditors.

PURSUANT to a decree of the High Court of Judicature at Fort William in Bengal, in its Ordinary Original Civil Jurisdiction, bearing date the 28th day of August 1902, made in Suit No. 624 of 1899, wherein Sreematty Nagendranandini Dassee, residing at No. 43-1 Raja Raj Ballava's Street, in the town of Calcutta, mother and heiress of Sreematty Patit Pabani Dassee, was plaintiff, and Raja Binoya Krishna Bahadur, residing at No. 106-3 Grey Street, in the town of Calcutta, sole executor of the last Will and Testament of the said Patit Pabani Dassee, deceased, was defendant, the creditors of the said Sreematty Patit Pabani Dassee, late of No. 106 Grey Street, in the town of Calcutta, the widow of Chunder Kally Ghose, deceased, who died on the 16th day of April 1896, are, on or before the 8th day of May 1905, to send to the office of the Registrar of this Court, on its Original Side, their names, address and descriptions, the full particulars of their claims, a statement of their accounts, and the nature of the securities, if any, held by them, or in default thereof they will be peremptorily excluded from the benefit of the said decree.

Every creditor holding any security may produce or transmit the same to the Registrar with the particulars of his claim on Tuesday, the 16th day of May 1905, at 12 o'clock in the forenoon, being the time appointed for adjudicating on the claim.

Dated this 5th day of April 1905.

W. R. FIRE, Registrar

Braja Lal Mukherjee, Plaintiff's Attorney.
High Court, Original Side, Calcutta.

(396—1—251)

Notice.

A CERTIFICATE under section 36 of Act II of 1874 to the estate of Mrs. Mary Sybella Sandford, deceased, late of No. 5 Park Lane, Calcutta, who died intestate on 13th July 1904, has been granted to Charles William Sandford, employed as Chief Superintendent in the Office of the Accountant-General, Bengal, as the husband of the deceased to enable him to administer the estate. All persons being indebted to or having claims against the estate should communicate with the said Charles William Sandford.

HENRY T. HYDE,

Administrator-General of Bengal.

No. 3 Council House Street, Calcutta, 12th April 1905. (410—1)

NOTICE TO CREDITORS.

In the Goods of Robert Gordon Shaw, deceased.

NOTICE is hereby given that Letters of Administration with copy Will annexed to the property and credits of the deceased abovenamed having on the 20th January 1904 been granted to Henry Cooper Eggar, all creditors and other persons having any claim against the estate of the abovenamed deceased are hereby required to send in writing the particulars thereof to the undersigned on or before the 30th day of April 1905, after which date the assets of the estate of the said deceased will be distributed by Henry Cooper Eggar, the Administrator, amongst the parties entitled thereto, having regard to the claims of which he has then had notice. And notice is hereby further given that the said Henry Cooper Eggar will not be liable for the assets or any part thereof so distributed to any person of whose claim he shall not have had notice at the time of such distribution; such notice to be sent to the undersigned.

Dated this 22nd day of March 1905.

SANDERSON & Co.

(30 Dalhousie Square),

Attorneys for Henry Cooper Eggar,

Administrator to the estate of the deceased.

(320—3—236)

Estate late Major George Howard Brethertón, Indian Army.

NOTICE is hereby given that all creditors and other persons having any claims against the estate of the deceased above named are hereby required to send in writing the particulars thereof to Messrs. King, Hamilton & Co., 7 Hare Street, Calcutta, on or before the 25th day of May 1905, after which date the undersigned will distribute the assets of the estate of the said deceased among the parties entitled thereto, having regard to the claims of which he has then had notice.

And notice is hereby further given that the undersigned will not be liable for the assets or any part thereof so distributed to any person of whose claim he shall not have had notice at the time of such distribution

A. J. KER,

Administrator with Will annexed of the Property and Credits of the deceased
7 Hare Street, Calcutta.

Dated this 30th day of March 1905. (377—3—243)

Estate Henry Binny Webster, Indian Civil Service, deceased.

NOTICE is hereby given that all creditors and other persons having any claims against the estate of the deceased above named are hereby required to send in writing the particulars thereof to Messrs. King, Hamilton & Co., 7 Hare Street, Calcutta, on or before the 10th day of June 1905, after which date the undersigned will distribute the assets of the estate of the said deceased among the parties entitled thereto, having regard to the claims of which he has then had notice.

And notice is hereby further given that the undersigned will not be liable for the assets or any part thereof so distributed to any person of whose claim he shall not have had notice at the time of such distribution.

Dated this 13th day of April 1905.

A. J. KER,

Administrator with Will annexed of the property and credits of the deceased.
7 Hare Street, Calcutta.

(444—3—267)

Estate of the Right Hon'ble Thomas George, Earl of Northbrook, deceased.

NOTICE is hereby given that all creditors and other persons having any claims against the estate of the deceased above named are hereby required to send in writing the particulars thereof to Messrs. King, Hamilton & Co., 7 Hare Street, Calcutta, on or before the 10th day of June 1905, after which date the undersigned will distribute the assets of the estate of the said deceased among the parties entitled thereto, having regard to the claims of which he has then had notice,

And notice is hereby further given that the undersigned will not be liable for the assets or any part thereof so distributed to any person of whose claim he shall not have had notice at the time of such distribution.

Dated this 18th day of April 1905.

A. J. KER,
Administrator with Will annexed of the Property and Credits of the deceased,
7 Hare Street, Calcutta.

(445—3—256)

INSOLVENT NOTICES.

In the matter of MADHUB CHUNDER BYSACK, an insolvent.

On Thursday, the 23rd day of March last, it was ordered that Tuesday, the 2nd day of May next, be appointed for the further hearing of this matter, and that unless cause be shewn to the contrary on that day, the said insolvent be discharged personally as well as to his after-acquired property from all liabilities for debts, claims and demands of and against the said insolvent at the time of the filing of his petition for relief.

Shama Churn Basak, Attorney. (408—2)

In the matter of MONI LALL SAROWOI, an insolvent.

On Tuesday, the 28th day of February last, it was ordered that the matters of the petition of the said insolvent be heard on Tuesday, the 2nd day of May next, and that the said insolvent do then attend to be examined before the said Court.

S. D. Dutt & Gupta, Attorneys. (424—2)

In the matter of HAR MOOK ROY and others, insolvents.

On Monday, the 20th day of February last, it was ordered that the matters of the petition of the said insolvents be heard on Tuesday, the 2nd day of May next, and that the said insolvents do then attend to be examined before the said Court.

S. K. Deb, Attorney. (425—2)

In the matter of ATAL BEHARY BOSE MULLICK, an insolvent

On Thursday, the 2nd day of March last, it was ordered that the matters of the petition of the said insolvent be heard on Tuesday, the 2nd day of May next, and that the said insolvent do then attend to be examined before the said Court.

B. N. Basu & Co., Attorneys. (426—2)

In the matter of E. H THOMPSON, an insolvent.

On Tuesday, the 14th day of March last, it was ordered that the matters of the petition of the said insolvent be heard on Tuesday, the 2nd day of May next, and that the said insolvent do then attend to be examined before the said Court.

Insolvent in person. (427—2)

In the matter of GUNGA SHAHAY and others, insolvents.

On Tuesday, the 7th day of February last, it was ordered that the matters of the petition of the said insolvents be heard on Tuesday, the 2nd day of May next, and that the said insolvents do then attend to be examined before the said Court.

K. N. De, Attorney. (428—2)

In the matter of MADAN MOHUN, an insolvent.

On Friday, the 24th day of February last, it was ordered that the matters of the petition of the said insolvent be heard on Tuesday, the 2nd day of May next, and that the said insolvent do then attend to be examined before the said Court

J. C. Dutt, Attorney. (429—2)

In the matter of HENRY D'COSTA, an insolvent.

On Monday, the 6th day of March last, it was ordered that the matters of the petition of the said insolvent be heard on Tuesday, the 2nd day of May next, and that the said insolvent do then attend to be examined before the said Court.

Insolvent in person. (430—2)

In the matter of NARENDRANATH DEY, an insolvent.

On Monday, the 6th day of March last, it was ordered that the matters of the petition of the said insolvent be heard on Tuesday, the 2nd day of May next, and that the said insolvent do then attend to be examined before the said Court.

S. D. Dutt & Gupta, Attorneys. (431—2)

In the matter of ALICE MYLNE, an insolvent.

On Friday, the 24th day of February last, it was ordered that the matters of the petition of the said insolvent be heard on Tuesday, the 2nd day of May next, and that the said insolvent do then attend to be examined before the said Court.

Insolvent in person. (432—2)

In the matter of JOHN ROBERT FREDERICK CLAXON, an insolvent.

On Monday, the 20th day of March last, it was ordered that the matters of the petition of the said insolvent be heard on Tuesday, the 2nd day of May next, and that the said insolvent do then attend to be examined before the said Court.

S. C. Basak, Attorney. (433—2)

In the matter of LABH CHAND, an insolvent.

On Tuesday, the 14th day of March last, it was ordered that the matters of the petition of the said insolvent be heard on Tuesday, the 2nd day of May next, and that the said insolvent do then attend to be examined before the said Court.

Suresh Ch. Mukerjee, Attorney. (434—2)

In the matter of WILLIAM HUBERT SAVEDRA, an insolvent.

On Saturday, the 25th day of February last, it was ordered that the matters of the petition of the said insolvent be heard on Tuesday, the 2nd day of May next, and that the said insolvent do then attend to be examined before the said Court.

Insolvent in person. (435—2)

In the matter of KANHYE LALL, an insolvent.

On Saturday, the 25th day of February last, it was ordered that the matters of the petition of the said insolvent be heard on Tuesday, the 2nd day of May next, and that the said insolvent do then attend to be examined before the said Court.

J. C. Dutt, Attorney. (436—2)

In the matter of PREO LALL DHUR, an insolvent.

On Wednesday, the 1st day of March last, it was ordered that the matters of the petition of the said insolvent be heard on Tuesday, the 2nd day of May next, and that the said insolvent do then attend to be examined before the said Court.

Insolvent in person. (437—2)

In the matter of J. O. BURRILHON, an insolvent.

On Thursday, the 9th day of March last, it was ordered that the matters of the petition of the said insolvent be heard on Tuesday, the 2nd day of May next, and that the said insolvent do then attend to be examined before the said Court.

Insolvent in person. (438—2)

In the matter of JATINDRA NATH MOOKERJEE, an insolvent.

On Tuesday, the 14th day of March last, it was ordered that the matters of the petition of the said insolvent be heard on Tuesday, the 2nd day of May next, and that the said insolvent do then attend to be examined before the said Court.

Bannerjee and Haldar, Attorneys. (439—2)

In the matter of KUMAR KRISHNA MITTER, an insolvent.

On Friday, the 24th day of March last, it was ordered that the matters of the petition of the said insolvent be heard on Tuesday, the 2nd day of May next, and that the said insolvent do then attend to be examined before the said Court.

T. H. Wilson & Co., Attorneys. (440—2)

In the matter of JOHN ROBERT COULTHARD, an insolvent.

On Thursday, the 2nd day of February last, it was ordered that Tuesday, the first Court day in March 1906, be appointed for the further hearing of this matter, and that unless cause be shewn to the contrary on that day the said insolvent be discharged personally as well as to his after acquired property from all liabilities for debts, claims and demands of and against the said insolvent at the time of the filing of his petition for relief

H. N. Given Wilson, Attorney. (441—2)

In the matter of ALLEN ARTHUR, KT., an insolvent.

On Monday, the 14th day of November last, it was ordered that Tuesday, the 5th day of December next, be appointed for the further hearing of this matter, and that unless cause be shewn to the contrary on that day the said insolvent be discharged personally as well as to his after acquired property from all liabilities for debts, claims and demands of and against the said insolvent at the time of the filing of his petition for relief.

Orr, Robertson and Burton, Attorneys. (442—2)

In the matter of HENRY HORATIO ARDWISE, an insolvent.

Notice that an application for an *ad interim* protection order was made by the said insolvent on the 1[illegible]th instant, and that such application will be heard and disposed of by the Acting Commissioner of the Insolvent Court on Monday, the 1st day of May next, at the hour of half-past 10 o clock in the forenoon.

☞ Any creditor of the said insolvent desirous of opposing such application must appear before the said Court at the time and place aforesaid.

G. C. Chunder & Co., Attorneys. (44

Notice.

THE next annual stock-taking of the Indian Law Reports kept at the Bengal Secretariat Book Depôt will commence on the 1st April and will last till the 19th April, 1905, inclusive. The public are hereby informed that all issues of the said Reports from the said Depôt to subscribers and officials will be suspended during the period.

L. C. ADAMI,
Secretary to the Bengal Council and
Assistant Secretary to the Government of Bengal,
Legislative Department.

The 12th December, 1904.

Nadia Rivers.

Report showing the least depths of water for the week ending Friday, the 14th April 1905

Name of River.	Reach of River.	Least depth of water soundings.		REMARKS.
		Ft.	in.	
Bhagwathi.	Entrance from Ganges	1	6	
	Thence to Goriah	1	6	Momintola.
	From Goriah to Jangipur	1	6	Alampur.
	" Jangipur to Berhampore	1	0	Ganga Prasad.
	" Berhampore to Katwa	1	0	Bhootghat.
	" Katwa to Nadia	2	0	Borati.
Bhairab-Jalangi.	Entrance from Ganges ...	2	0	
	Thence to Akriganj ...	3	0	Khamardiar.
	Akriganj to junction of the Bhairab and Jalangi ...	3	0	Debolpur
	Thence to Patkabari ...	3	3	Lalnaghar.
	Patkabari to Nadia .	3	0	Panditpur.
Mathabhanga.	Entrance from Ganges ..	0	3	
	Thence to Dewanganj .	0	3	Jamalpur.
	From Dewanganj to Shikarpur	0	9	Hakara.
	" Shikarpur to Boalia ...	1	9	Bharal.
	" Boalia to Chuadanga .	1	9	Muhammadpur.
	" Chuadanga to Kissenganj and Hanskhali	4	9	Shialmari.

Gauge Readings.

	Locality.	Date.	Hour.	Height above zero.	Height above mean sea-level.	Remarks.
			A.M.	Ft.	Ft.	
Ganges ..	Sahibganj	15-4-1905	6	0·12	68·12	Steady.
	Rampur Boalia	15-4-1905	Noon	0·50	42·50	Fall.
	Entrance of Bhagirathi Gerish	16-4-1905	A.M. 7	4·15	40·15	Steady.
	Entrance of Khairab-Jalangi Akriganj	16-4-1905	7	0·30	38·36	Do.
	Entrance of Mathabhanga	...	...	...	...	...
Bhagirathi.	Jangipur	16-4-1905	A.M. 8	19·55	45·35	Steady.
	Berhampore	17-4-1905	7	2·18	35·93	Fall.
	Katwa	14-4-1905	P.M. 5	4·15	19·31	Steady.
Jalangi ..	Krishnagar	14-4-1905	...	·00	...	...
	Sarupgan)	15-4-1905	Noon 12	2·10	2·10	Rise.
Mathabhanga.	Hanskhali	15-4-1905	P.M. 4	4·85	15·60	Fall.

A. K. BANERJI, Accountant,
for *Exe. Engr., Nadia Rivers Division.*

Berhampore, the 17th April 1905.

CALCUTTA POST OFFICE NOTICE.

Mails for—	Date and hour of closing at the General Post Office, Calcutta.		Route by which despatched.
	1905.	P.M.	
United Kingdom, Aden, Egypt, Europe, America, West Africa *vid* United Kingdom and East Africa *vid* Aden (and also South Africa, if superscribed on the cover *vid* United Kingdom or Aden).	Apl. 20	At 6·30	Per P. & O. steamer from Bombay.
Parcels and money-orders for the United Kingdom and other Foreign places.	,, 19	Parcels, 5 P.M.; M.-O., 4 P.M.	Ditto ditto.
* Australasian Colonies	,, 24	At 7-30	*Vid* Tuticorin and Colombo.*
† Straits Settlements (Also China and Japan, if the Steamer's name is superscribed on the cover).	,, 21	,, 8-30	Per steamer *Kwosang*.
Burma	,, 20	,, 7-30	Per R. I. S. N. Co.'s steamer.
Burma, Penang and Singapore.	,, 22	,, 7-30	
Akyab, Kyaukpyu and Sandoway.	,, 22	,, 7-30	
Burma, Tavoy and Mergui	,, 24	,, 7-30	
Port Blair	,, 24	,, 7-30	*Vid* Rangoon.
South Africa (Letters)	,, 21	,, 7-30	Per steamer *Umlazi* from Colombo.
Ditto (Parcels)	,, 21	,, 5	
Ditto (Letters), Supplemental.	,, 22	,, 7-30	
Ditto (Parcels), Supplemental.	,, 22	,, 5	
Port Blair	,, 22	,, 7-30	*Vid* Rangoon.

* Although the date entered in column 2 is, as far as can be calculated, the latest safe date of posting for the next Mail steamer, full allowance being made for the steamer being in advance of her published timing, Mails for the places mentioned in column 1 are despatched daily to Tuticorin, so that they may proceed by any steamer from Colombo that has been unusually accelerated or retarded, or by any special opportunity that may be afforded by a steamer not belonging to one of the regular lines.

† Correspondence for China and Japan is despatched daily to Tuticorin, so that it may proceed by the first steamer from Colombo.

1. The letter-box for Inland articles will be cleared for the forenoon Mails at the following hours:—

For Goalundo, Arakan and Chittagong, at 5-45 A.M.

For Midnapore and Orissa districts, at 9 A.M.

For the Eastern districts, as far as Dacca and Mymensingh, at 6-15 A.M.

For Khulna and Jessore districts, at 7 A.M.

For Bombay, Central Provinces and Midnapore *vid* Bengal-Nagpur Railway, at 11-15 A.M., and with a late fee of ½ anna up to 11-40 A.M.

2. The letter-box will be cleared for the evening Mails at the following hours, viz.—

For the East Indian Railway Loop Mail, at 2-30 P.M., and with a late fee of ½ anna up to 2-55 P.M.

For the Northern Bengal, Darjeeling and Assam Mails, at 3-25 P.M., and with a late fee of ½ anna up to 3-50 P.M.

For the Bombay Mail *vid* Jubbulpore, at 6 P.M., and with a late fee of ½ anna up to 6-30 P.M.

For the Punjab Mail, at 7-30 P.M.
For Midnapore, Orissa, Madras Presidency and Ceylon, at 7-30 P.M.
For the Khulna Mail, at 7-30 P.M.
For the Eastern Bengal Mail, Darjeeling, and places on the Darjeeling-Himalayan Railway, at 7-30 P.M.
} and with a late fee of ½ anna up to 8 P.M. and with a late fee of 1 anna up to 8-45 P.M.

3. Late registered letters will be received between the following hours:—

For the Bombay Mail *vid* Jubbulpore, from 5 P.M. to 6-15 P.M.

For the Punjab Mail, from 6 P.M. to 7 P.M.

For the Eastern Bengal Mail, from 6 P.M. to 7 P.M.

For the Khulna Mail, from 6 P.M. to 7 P.M.

For Midnapore, Orissa, Madras Presidency and Ceylon, from 6 P.M. to 7 P.M.

NOTE.—The late fee on each registered letter will be 2 annas, which must be prepaid in stamps on the letter.

4. Articles for Burma and for Port Blair by sea are received without late fee up to 7-30 P.M., and with a late fee of ½ anna up to 8 P.M.

5. On the latest safe day of despatch of Mails for the Australasian Colonies, or any other Foreign Countries, *vid* Madras or Tuticorin, the letter-box for Foreign articles will be cleared for the last time at 7-30 P.M., and late letters and papers fully prepaid will be received up to 8-45 P.M.

6. On the day of despatch of the Mail for Europe (Thursday) the letter-box for Foreign articles will be cleared for the last time for articles, without the late fee, at 6-30 P.M., and late letters and papers fully prepaid will be received up to 6-45 P.M. Late registered articles will be received from 5 to 6 P.M. On the day of despatch of any Foreign Mail by sea, the letter-box will be cleared for the last time, without the late fee, up to 8-30 P.M., and late letters and papers up to 9 P.M. The late fee for Foreign articles is 4 annas, which must be prepaid in stamps affixed to the articles.

CALCUTTA G. P. O.,
The 17th April 1905.

JOHN OWENS,
Presidency Postmaster.

THE INDIAN LAW REPORTS.

Published in FOUR SERIES, viz.:

CALCUTTA, MADRAS, BOMBAY AND ALLAHABAD.

THE Indian Law Reports, published under the authority of the Governor General in Council, are printed in monthly Parts, which are issued, as soon as possible after the first of each month, at Calcutta, Madras, Bombay and Allahabad, respectively.

The Reports comprise four Series—one for the Calcutta High Court, a second for the Madras High Court, a third for the Bombay High Court, and a fourth for the Allahabad High Court.

The cases heard by the Privy Council on appeal from each High Court are reported in the Series for that High Court. Cases heard by the Privy Council on appeal from Provinces in India not subject to any High Court are reported in the Calcutta Series.

The Calcutta Series is distributed by the Bengal Secretariat Book Depôt; and the Madras, Bombay and Allahabad Series are distributed direct, from Madras, Bombay and Allahabad, respectively.

Persons desiring to subscribe for or purchase the Reports should apply to—

the Officer in charge, Bengal Secretariat Book Depôt, Calcutta, or
the Superintendent, Government Press, Madras, or
the Superintendent, Government Central Press, Bombay, or
the Curator of Government Books, United Provinces of Agra and Oudh, Allahabad.

PRICES.

THE terms of subscription, and the terms on which current issues and back numbers are sold, are as follows:—

	Without postage.	With Indian postage.	With Foreign postage.
COMPLETE SERIES—	Rs. A. P.	Rs. A. P.	Rs. A. P.
Current issues, per annum	.....	22 8 0	28 0
Back numbers, per annum	20 0 0	22 8 0	28 0 0
CALCUTTA SERIES—			
Current issues or back numbers, per annum ...	10 0 0	12 8 0	14 0 0
MADRAS, BOMBAY or ALLAHABAD SERIES—			
Current issues or back numbers, per annum ...	6 0 0	7 0 0	8 0 0
ANY MONTHLY PART—			
Calcutta Series	2 0 0	2 0 0	2 0 0
Madras, Bombay or Allahabad Series	1 0 0	1 0 0	1 0 0

All payments must be made in advance. Remittances to Calcutta should be addressed to the TREASURER, BENGAL SECRETARIAT, *Writers' Buildings, Calcutta*.

PARTS OUT OF STOCK AND DUPLICATE COPIES.

WHEN a requisition is received for any set of the Reports, and any Parts are out of stock, the following deduction from the foregoing rates is made for such Parts:—

	Without postage.	With Indian postage.
CALCUTTA SERIES—	Rs. A. P.	Rs. A. P.
All Parts for one year	7 2 6	8 6 3
Any one Part	0 5 9	0 10 3
MADRAS, BOMBAY or ALLAHABAD SERIES—		
All Parts for one year	4 4 6	4 11 3
Any one Part	0 5 3	0 5 9

If any Part is lost in transit to a subscriber, and the fact is reported to the office of distribution within three months from the date of publication, a duplicate will be supplied at the following rate:—

	Without postage.	With Indian postage.
	Rs. A. P.	Rs. A. P.
CALCUTTA SERIES	0 5 9	0 10 3
MADRAS, BOMBAY or ALLAHABAD SERIES	0 5 3	0 5 9

REPRINTS.

THE Complete Series for the years 1876 to 1881, 1883, 1886, 1888, 1890, 1892 to 1896 and 1899 to 1903 has been reprinted, and may be purchased at the Bengal Secretariat Book Depôt, Calcutta, either wholly or in part. All Parts required to complete the stock of the Reports for other years are now being reprinted. Complete Reports from the beginning to date will therefore shortly be available at the Bengal Secretariat Book Depôt.

ADVERTISEMENTS FOR THE CALCUTTA SERIES.

ADVERTISEMENTS of law publications only are received. Rates can be ascertained on application to the Bengal Secretariat Book Depôt.

THE BENGAL LAW REPORTS.

SEVERAL volumes of the Bengal Law Reports, from August 1862 to December 1875, and Full Bench Rulings, Parts I and II, are available at the Bengal Secretariat Book Depôt, Calcutta, at the following rates:—

	Without postage.	With Indian postage.
	Rs. A. P.	Rs. A. P.
BENGAL LAW REPORTS, for one year ...	20 0 0	22 8 0
Any one volume, ...	2 0 0	2 0 0
FULL BENCH RULINGS Part I and II ...	20 0 0	22 8 0

Pure Sulphate of Quinine and Sulphate of Cinchonidine.

MANUFACTURED AT THE BENGAL GOVERNMENT CINCHONA PLANTATION.

FROM 1st April 1905 the price of these articles will be as follows:—

Quinine.

1	Pound tin,	Rs. 16,	or, post free,	Rs.	16-8.
½	"	" 8	" "	"	8-6.
¼	"	" 4	" "	"	4-6.

Cinchonidine.

1	Pound tin,	Rs. 12,	or, post free,	Rs.	12-8.
½	"	" 6	" "	"	6-6.
¼	"	" 3	" "	"	3-6.

Analysis shows these articles to be of the purest manufacture; and they are guaranteed to be free from wilful admixture with the inferior alkaloids. They are for sale only to Government officers, and only for cash, and may be had from the Superintendent, Botanic Garden, Sibpur, near Calcutta. Cinchonidine can also be purchased by dealers at the following rates:—

1	Pound tin,	Rs. 16,	or, post free,	Rs.	16-8.
½	"	" 8	" "	"	8-6.
¼	"	" 4	" "	"	4-4.

Cinchona Febrifuge.

Cinchona Febrifuge can be purchased by all Government officers and by any one taking *five pounds* and upwards at a time from the Superintendent, Botanic Garden, Calcutta, at the following rates—per four-ounce tin, Re. 1 ans. 14; per eight-ounce tin, Rs. 3 ans. 12; per pound tin, Rs. 7 ans. 8; the general public can be supplied by the Superintendent, Botanic Garden, *for cash only*, at the undernoted rates—per four-ounce tin, Rs. 2 ans. 4; per eight-ounce tin, Rs. 4 ans. 8; per pound tin, Rs. 9. This medicine is also sold by the principal European and Native druggists in Calcutta. Postage, four annas per four-ounce tin; six annas per eight-ounce tin; and eight annas per pound tin, in addition to the foregoing rates.

THE CALCUTTA GAZETTE.

The 1st March 1901.—From this date the subscription to, and postage for, the *Calcutta Gazette* will be at the following rates, payable in advance:—

PER ANNUM.	For Calcutta.	For the Mufassal including postage.
	Rs. A.	Rs. A.
Entire *Gazette*	15 0	20 0
Parts I, Ia and Ib together ...	5 0	7 8
Part II	1 0	2 12
Parts III, IV and IVA together	4 0	6 0
" V and VI together ...	2 0	3 0
Appendix (Marine Notifications)	1 0	2 12
Supplement	5 0	7 8
PER ISSUE.		
Entire *Gazette*	0 5	0 10
Supplement	0 4	0 5

N B.—Separate Parts of each issue of the *Gazette*, and occasionally important Rules and Extracts, can be obtained from the Officer in charge, Bengal Secretariat Book Depôt, at the rate of one anna for every sixteen pages or a fraction thereof. Postage according to weight.

RATES FOR ADVERTISEMENTS in the *Calcutta Gazette*:—

Full page, per issue	Rs. 20
Half " "	" 10

Casual advertisements, 4 annas per line per insertion.

Parts I, II, and III of a Descriptive Catalogue of the Sanskrit Manuscripts in the Library of the Calcutta Sanskrit College, prepared by Pandit Hrishikesa Sastri and Babu Siva Chandra Gui, M.A., B.L., of said College, are offered to the public for sale. The Catalogue is to be completed in 28 parts, the price of each part being 12 annas a copy, exclusive of postage. Copies can be obtained from the Principal of the Sanskrit College, Calcutta.

GOVERNMENT PUBLICATIONS FOR SALE

At the Bengal Secretariat Book Depôt, Writers' Buildings, Calcutta, and by the following Agents :—

AGENTS IN INDIA.

Messrs. Thacker, Spink & Co., Calcutta and Simla.
Messrs. Newman & Co., Calcutta.
Messrs Higginbotham & Co., Madras.
Messrs. Thacker & Co., Ld., Bombay.
Messrs. A. J. Combridge & Co., Bombay.
The Superintendent, American Baptist Mission Press, Rangoon.
Mrs. Radhabai Atmaram Sagoon, Bombay.
Messrs. R. Cambray & Co., Calcutta.
Rai Sahib M. Gulab Singh & Sons, Proprietors of the Mufid-i-am Press, Lahore, Punjab.
Messrs. S. K. Lahiri & Co., Printers and Booksellers, College Street, Calcutta.
Messrs. V. Kalyanarama Iyer & Co., Booksellers, &c., Madras.
Messrs. D. B. Taraporevala, Sons & Co., Booksellers, Bombay.
Messrs. G. A. Nateson & Co., Madras.
Mr. N. B. Mathur, Superintendent, Nazair Kanum Hind Press, Allahabad.
The Calcutta School Book Society.

AGENTS IN ENGLAND.

Mr. E. A. Arnold, 41 and 43 Maddox Street, Bond Street, London, W.
Messrs. Constable & Co., 16 James Street, Hay Market, London, W.
Messrs. Kegan Paul, Trench, Trübner & Co., Charing Cross Road, London.
Mr. B. Alfred Quaritch, 15 Piccadilly, London.
Messrs. P S. King & Son, 2 & 4 Great Smith Street, Westminster, London.
Messrs. H. S. King & Co., 65 Cornhill, London
Mr. B. H. Blackwell, 50-51, Broad Street, Oxford.
Messrs. Deighton Bell & Co., Cambridge

AGENTS ON THE CONTINENT.

Messrs. R. Friedländer & Sohn, Berlin, N. W. Carlstrasse, 11.
Mr. Otto Harrassowitz, Leipzig.
Mr. Karl Hiersemann, Leipzig.
Mr. Ernest Leroux, 28 Rue Bonaparte, Paris.
Mr. Martinus Nijhoff, The Hague.

NOTICE.—Books required for private use can be purchased. Applications should be accompanied by remittance in each case.

All remittances on account of subscriptions to, or prices of, Gazettes, Indian Law Reports or other Government publications available for sale at the Bengal Secretariat Book Depôt, or for cost of advertisements published in the Gazettes should, in future, be made payable to the "Treasurer, Bengal Secretariat, Calcutta." Advices of such remittances, if separately sent, should be addressed to the "Accountant, Bengal Secretariat." All advertisements intended for publication in the *Calcutta* or *Bengali Gazette* should be sent direct to the Superintendent, Government Printing, Bengal.

Books required for the Public Service should be obtained through the Heads of Departments.

☞ The amounts within parentheses are for packing and postage.

NEW PUBLICATIONS ISSUED DURING THE CURRENT QUARTER.

REVENUE DEPARTMENT.

A Monograph on Gold and Silver Work in the Bengal Presidency. By D. N. Mookherjee, Assistant Director, Land Records and Agriculture. F'cap. Paper cover. Re. 1-8. (3s.)

NEW PUBLICATIONS ISSUED BETWEEN 1ST OCTOBER 1904 AND THE 31ST MARCH 1905.

APPOINTMENT DEPARTMENT.

Quarterly Civil List of Bengal, corrected up to 1st January 1905. Re. 1. (4s.)

FINANCIAL DEPARTMENT.

Report on the Road and Public Works Cess Operations of the Lower Provinces for the official year 1903-04. F'cap. Paper cover. Re. 1. (2s.)
Report on the Administration of the Excise Department in the Lower Provinces of Bengal for the year 1903-04. F'cap. Paper cover. Re. 1. (2s.)

GENERAL DEPARTMENT.

Report on Inland Emigration during the year ending 30th June 1904. F'cap. Paper cover. As. 8. (1s.)
General Report on Public Instruction in Bengal for 1903-04. F'cap. Paper. Re. 1-5-3. (2s.)
List of Officers in the Subordinate Educational Service, Bengal, corrected up to 1st January 1905. As. 8. (1s.)
Bengal Administration Report, 1903-04. F'cap. Cloth. Re. 1. (3s.)

JUDICIAL DEPARTMENT.

Annual Report on the Police Administration of the Town of Calcutta and its suburbs for the year 1903. F'cap. Paper cover. Re. 1. (2s.)

LEGISLATIVE DEPARTMENT.

The Chota Nagpur Landlord and Tenant Procedure Act (Bengal Act I of 1879, modified) with notes by H. W. O. Carnduff. Re. 1-8. (2s.)
Indian Emigration Act (Amendment) (Act XII of 1904) in Bengali, Hindi or Uriya. 6p. (1a.)
The Indian Stamp Act (Act XV of 1904), in Bengali, Hindi or Uriya. 1a. (1a.)
The Local Authorities Loans Act (Act I of 1905) in Bengali or Hindi. 6p. (1a.)
The Indian Universities Validation Act (Act II of 1905) in Bengali or Hindi. 6p. (1a.)
The Stage Carriages Act (Act XVI of 1861), as modified up to 1st February 1898, in Hindi. As 3. (1a.)
The Indian Evidence Act (Act I of 1872) as modified up to 1st November 1902, in Hindi. As. 14 (1a.)
The Indian Explosives Act (Act IV of 1884) as modified up to 1st December 1884 in Hindi. As. 2. (1a.)
The Bengal Tenancy Act (Act VIII of 1885) as modified up to 1st December 1903, in Uriya. Re. 1 (2s.)
The Indian Railway Act (Act IX of 1890) as modified up to 1st May 1896 and corrected up to the 1st December 1903, in Hindi. As. 13. (1a.)

MUNICIPAL DEPARTMENT.

List of qualified Medical Practitioners in Bengal, 1904. Royal 8vo. Boards. Paper cover. Re. 1. (2s.)
Resolution reviewing the working of Municipalities in Bengal during the year 1903-04. F'cap. Paper cover. Re. 1. (2s.)
Resolution reviewing the Reports on the working of District Boards in Bengal during the year 1903-04. F'cap. Paper cover. Re. 1. (1s.)

PUBLIC WORKS DEPARTMENT.

Conditions under which Electric Meters and other instruments will be accepted for testing in the Government Electrical Laboratory, Calcutta, and Table of Fees. F'cap. Paper cover. 1s. (1s.)
Revenue Report of the Government of Bengal, Public Works Department, Irrigation Branch, for the year 1903-04. F'cap. Boards. Paper cover. Re. 2. (2s.)
Classified List and Distribution Return of Establishment of the Public Works Department, Bengal, corrected up to 31st December 1904. Re. 4. (2s.)
Resolution on the Embankment and Drainage Reports of the Government of Bengal, Irrigation Department, for the year 1903-04. F'cap. Boards. Paper cover. Re. 1. (2s.)

REVENUE DEPARTMENT.

Annual Report on the Survey Operations in Bengal during 1903-04 (from October 1903 to September 1904). F'cap. Paper cover. Re. 1. (2s.)
Final Report on the Survey and Settlement Operations in the Saran District, 1893 to 1901, by J. H. Kerr, Esq., Settlement Officer, North Bihar. F'cap. Boards, paper cover Re. 4-8. (6s.)
Final Report on the Survey and Settlement Operations in the Darbhanga District, 1896 to 1903, by J. H. Kerr, Esq. F'cap. Boards, paper cover. Re. 6. (5s.)
Abstract of the Indian Factories Act, 1881, in sheet form, for hanging up in Factories. In English and Hindi and Urdu As 4. (1s.) unmounted. Re. 1-4 mounted
Agricultural Statistics of the Lower Provinces of Bengal for 1903-04. F'cap. Paper cover. As. 8. (1s.)
Report on Wards and attached Estates in the Lower Provinces for the year 1903-04. F'cap. Paper cover. Re. 1-8. (2s.)
Report on the Land Revenue Administration of the Lower Provinces for the year 1903-04. F'cap. Paper cover. Re 3. (2s.)

STATISTICAL DEPARTMENT.

The Trade of Bengal with Nepal, Thibet, Sikkim and Bhutan for the year ending March 1904. Boards. Paper cover. Re. 1-2. (2s.)
Report on the Trade carried by Rail and River in Bengal in the official year 1903-04. F'cap. Board. Paper cover. Re 4. (6s.)

OLDER PUBLICATIONS.

A General Catalogue of all Government Publications (corrected up to 30th June 1904) may be obtained *gratis* on application to the Officer in charge, Bengal Secretariat Book Depôt

Publications for sale at the office of the Chief Inspector of Explosives with the Government of India.

Rules for the manufacture, possession and sale of explosives issued by each of the Local Governments and Administrations. Price 12c.
Rules for the transport and importation of explosives issued by the Government of India. Price 12s
Rules for the transport and importation of explosives at the Port of Calcutta. Price 6s.

Publications for sale at the Custom House, Calcutta.

Review of the Maritime Trade of Bengal and its Chief Port (Calcutta) for the year 1903-04. Price Re. 1.
Annual Statement of the Sea-borne Trade and Navigation of Bengal, Foreign and Coasting combined in one volume, for the year 1903-04. Price Rs. 6.
Previous years' volumes can be obtained at the same price.

GOVERNMENT PUBLICATIONS FOR SALE

BY THE SUPERINTENDENT OF GOVERNMENT PRINTING, INDIA, 8 HASTINGS STREET, CALCUTTA.

A General Catalogue of all Government Publications may be obtained gratis from the Government Central Press, Calcutta.

All books published by the Superintendent of Government Printing, India, can be purchased, either directly or through the following or any other booksellers:—

AGENTS IN EUROPE.

Mr. E. Arnold, 41 and 43 Maddox Street, Bond Street, W. London.

Messrs. Constable & Co., 16 James Street, Haymarket, W., London.

Messrs. Kegan Paul, Trench, Trubner & Co., Charing Cross Road, London.

Mr. Bernard Quaritch, 15 Piccadilly, London.

Messrs. P. S. King and Son, 2 & 4 Great Smith Street, Westminster.

Messrs. H. S. King & Co., 65 Cornhill, and 9 Pall Mall, London.

Messrs. Grindlay & Co., 54 Parliament Street, London, S. W., Agents for the sale of the Army List.

Mr. Otto Harrassowitz } Leipzig.
Mr. Karl Hiersemann }

Messrs. R. Friedlander & Sohn, Berlin, W. N. Carlstrasse, 11

Mr. Ernest Leroux, 28 Rue Bonaparte, Paris.

Mr. Martinus Nijhoff, Hague, Holland.

Mr. B. H. Blackwell, 50 & 51 Broad Street, Oxford.

Messrs. Deighton Bell & Co., Cambridge.

AGENTS IN INDIA.

Messrs. Thacker, Spink & Co., Calcutta and Simla.

Messrs. Newman & Co., Calcutta.

Messrs. R. Cambray & Co., Calcutta.

Messrs. S. K. Lahiri & Co., Calcutta.

Eveyln, Hubert, & Co.,* 149, Dhurmotollah Street, Calcutta.

Messrs. Higginbotham & Co., Madras.

Messrs. V. Kalyanarama Iyer & Co., Madras.

Messrs. G. A. Natesan & Co., Madras.

Messrs. Thacker & Co., Ld., Bombay.

Messrs. A. J. Combridge & Co., Bombay.

Messrs. D. B. Taraporevala, Sons & Co., Bombay.

Mrs. Radhabai Atmaram Sagoon, Bombay.

Superintendent, American Baptist Mission Press, Rangoon.

Rai Sahib M. Gulab Singh & Sons, Mufid-i-Am Press, Lahore.

Mr. N. B. Mathur, Superintendent, Nasair Kanun Hind Press, Allahabad.

Manager, Educational Book Depôts, Nagpur and Jubbulpore.*

Manager of the Imperial Book Depot, 63 Chandny Chauk Street, Delhi.*

Manager, "East Coast News," Vizagapatam.*

Manager, "The Agra Medical Hall and Co-operative Association, Limited" (Successors to A. John & Co., Agra).*

Mr. T. K. Seetharama Aiyar, Kumbakonam.*

Lala Debi Prasad, Vakil and Manager of Law Press, Cawnpore.*

Superintendent, Basel Mission Book and Tract Depository, Mangalore.*

Messrs. P. Varadachary & Co., Madras.*

Mr. Sunder Pandurang, Bombay.*

The Mercantile Mission Branch, Calicut.*

H. Dowman, Esq. (late Extra Assistant Superintendent, Survey of India), Allahabad.*

H. Liddell, Esq., Printers, etc., 7, South Road, Allahabad.*

* Agents for sale of the Legislative Department publications.

NOTICE.—Books and Acts required for private use only can be purchased. Applications should be accompanied by a remittance, unless it is wished that the books should be sent by value-payable post, in which case, besides the ordinary postage, an additional charge is made for registration and commission.

Books and Acts required for the public service should be obtained through Local Governments to whom the applicant is subordinate.

Application for Government publications which are no longer in print should be made to the Agents of the particular Government under whose orders they were originally issued.

(*The amounts within parentheses are for packing and postage.*)

List of New Books published during the Current Quarter

HOME DEPARTMENT.

Scientific Memoirs by Officers of the Medical and Sanitary Departments of the Government of India—Oriental or Delhi Sore by Captain S. P. James, M.B., I.M.S, New series, No. 13. Super-Royal 4to. Limp cover. 10a. or 1s. (2s.)

Scientific Memoirs by Officers of the Medical and Sanitary Department of the Government of India—On a parasite found in the White Corpuscles of the blood of dogs by Captain S. P. James, M.B., I.M.S. New series No. 14. Super-Royal 4to. Limp cover. 10a. or 1s. (2s.)

Imperial Library List of Additions, Third Series, with subject index, March 1905. No. 7. Super-Royal 4to. Paper cover. 8a. or 9d. (1s.)

* The Private Diary of Ananda Ranga Pillai, Vol. I, 1736 to 1746.—Dubash to Joseph Francois Dupleix, Knight of the Order of St. Michael, and Governor of Pondichery.—A record of Matters, Political, Historical, Social, and Personal, from 1736 to 1761. Translated from the Tamil by the order of the Government of Madras and Edited by Sir J. Frederick Price, K.C.S.I., late of the I.C.S., assisted by R. Rangachari, B.A. Rs. 3 or 4s. 6d. (7s.)

REVENUE AND AGRICULTURE DEPARTMENT.

Progress Report of Forest Administrations in the Andamans for 1903-04. Foolscap. Paper cover. 8a. or 9d. (2a.)

COMPTROLLER-GENERAL.

Appropriation Report on the Accounts of the Government of India for 1903-04 by A. F. Cox, Esq. Foolscap. Board. 8a. or 9d. (6a.)

STATISTICAL DEPARTMENT.

Sea-Borne Trade and Navigation Accounts of British India for the month of February 1905. No. 11 of 1904-05. Royal 8vo. Stitched. 8a. or 9d. (2a.)

List of Books published from October 1904 to March 1905.

LEGISLATIVE DEPARTMENT.

The Indian Registration Act, 1877 (III of 1877), as modified up to 1st April, 1900, with footnotes brought down to 1st November, 1902. 11a. (2a.)

The Indian Emigration Act, 1883 (XXI of 1883), as modified up to 1st December, 1902. 11a.

Act XXX of 1852. An Act for the Naturalization of Aliens, as modified up to 1st December, 1902. 2a. (1a.)

Act V of 1861. The Police Act, 1861. As modified up to 7th March, 1903. 7a. 6p. (1a.)

Act X of 1873. The Indian Oaths Act. As modified up to 1st February, 1903. 3a. 9p. (1a.)

Act XIX of 1883. The Land Improvement Loans Act, 1883. As modified up to 1st February, 1903. 2a. 6p. (1a.)

Act XII of 1884. The Agriculturists' Loans Act, 1884. As modified up to the 15th December, 1896, and with footnotes brought down to the 1st February, 1903. 2a. (1a.)

Act IX of 1890. The Indian Railways Act, 1890. As modified up to 1st May, 1896, with footnotes brought down to 1st January, 1903. 15a. (3a.)

Act XXXIV of 1850. The State Prisoners Act, 1850. As modified up to 30th April, 1903. 2a. 6p. (1a.)

Act XXXIV of 1858. The Lunacy (Supreme Courts) Act, 1858. As modified up to 30th April, 1903. 4a. 3p. (1a.)

Act XXXV of 1858. The Lunacy (District Courts) Act, 1858. As modified up to 30th April, 1903. 2a. 3p. (1a.)

Act V of 1873. The Government Savings Banks Act, 1873. As modified up to 1st April, 1903. 3a. 6p. (1a.)

Act II of 1886. The Indian Income Tax Act, 1886. As modified up to 1st April, 1903. 5a. (1a. 6p.)

Act I of 1878. The Opium Act, 1878. As modified up to 1st December, 1896, with footnotes brought down to 1st March, 1902. 5a. 6p. (1a.)

Act III of 1865. The Carriers Act, 1865. As modified up to 31st May, 1903. 3a. (1a.)

Act IX of 1897. Amending the law relating to Government and other Provident Funds. As modified up to 1st May, 1896, with footnotes brought down to 1st January, 1903. 1a. 6p. (1a.)

Act No. XII of 1855 (Legal Representatives' Suits), as modified up to 1st November, 1904. 1a. 6p. (1a.)

Act No. IX of 1860 [Employers and Workmen (Disputes)], as modified up to 1st December, 1904. 1a. 6p. (1a.)

Act No XXI of 1860 (Societies Registration), as modified up to 1st December, 1904. 2a. 6p. (1a.)

The Punjab Laws Act, 1872 (IV of 1872), as modified up to 1st November, 1904. 7a. 1a. (1a.)

The Indian Christian Marriage Act, 1872 (XV of 1872), as modified up to 1st December, 1904. 10a. (1a.)

Act No. X of 1891 (Indian Penal Code Amendment), as modified up to 1st December 1904. 1a. (1a.)

The Indian Petroleum Act, 1899 (VIII of 1899), as modified up to the 1st December 1904. 7a. (1a.)

The Indian Extradition Act, 1903 (XV of 1903), as modified up to 1st December, 1904. 5a. 6p. (1a.)

Act V of 1869. The Indian Articles of War, as modified up to 1st December 1904. Royal 8vo. Stitched. Re. 1 2a. (3a.)

Act XV of 1881. The Indian Factories Act, 1881, as modified up to the 1st December 1904. Royal 8vo. Stitched. 5a. 6p. (1a. 6p.)

Act V of 1883. The Indian Merchant Shipping Act, 1883, as modified up to the 1st December, 1904. Royal 8vo. Stitched. 6a (1a.)

The Central Provinces Code, 3rd Edition, 1905. Cloth. Super-Royal 8vo. Re. 4 or 6s. (6a.)

The Bengal Code, Volume I, 3rd Edition, 1905 (Now ready). Cloth. Super-Royal. Price all 5 Volumes Rs. 20 or 40s. Vol. I. Rs. 5 or 8s. (8a.)

The Public Gambling Act, 1867 (III of 1867), as modified up to the 1st January, 1905. As. 4 or 5d. (1a.)

The Indian Contract Act, 1872 (Act IX of 1872), as modified up to the 30th June, 1901. Royal 8vo. Stitched. Re. 1-4a. (2a.)

HOME DEPARTMENT

Scientific Memoirs by Officers of the Medical and Sanitary Departments of the Government of India. On a parasite found in persons suffering from enlargement of the spleen in India, by Lieut. S. R. Christophers, M.B., I.M.S. New series, No. 11 Super-Royal 4to. Limp cover. Re. 2 or 3s. (3a.)

Report on the Administration of Criminal Justice in Lower Provinces of Bengal during the year 1903. Foolscap. Paper cover Re. 1. or 1s. 6d. (2a.)

Imperial Library List of Additions, September to December 1904, Nos. 1-6. Foolscap. Paper cover. As. 3 or 9d. (2a.) each.

Report on the Administration of Civil Justice in the Lower Provinces of Bengal during the year 1903. Foolscap. Paper cover. Re. 1 or 1s. 6d. (2a.)

Scientific Memoirs by Officers of the Medical and Sanitary Departments of the Government of India on the Morphology, Teratology and Declinism of the Flowers of Cannabis By Major D. Prain, M.B., I.M.S. New series. No. 12. Super-Royal 4to. Limp cover. 14a. 1s. 4d. (3a.)

Quarterly List of Officers in the Departments of the Government of India, October to December 1904, January to March 1905. Foolscap, Paper cover As. 4 or 5d (1s.)

Annual Report of the Sanitary Commissioner with the Government of India, 1903, with Appendices and Returns of sickness and Mortality among European Troops, Native Troops and Prisoners in India for the year. Foolscap. Board. Rs. 3 or 4s. 6d. (6s.)

Report of the Indian Police Commission, 1902-03. Foolscap. Board. With appendices Re. 1-8s. (7s.); without appendices, Re. 1 (6s.)

DEPARTMENT OF REVENUE AND AGRICULTURE.

Report of the Chief Inspector of Mines in India for the year ending 31st December 1903. Foolscap. Board. As. 12 or 1s. 2d. (2s.)

Review of Forest Administration in British India for the year 1902-03. Foolscap. Paper cover. Re. 1-11 or 2s. 6d. (3s.)

Annual Administration Report of the Civil Veterinary Department in India for the official year 1903-04. Foolscap. Paper cover. 12s. or 1s. (2s.)

Records of the Botanical Survey of India. Vol. IV, No. 1 (An Epitome of the British Indian Species of impatients by Sir J. D. Hooker, G.C.S.I., C.B., F.R.S. Part I. Royal 8vo. Paper cover. 3s or 4d. (1s.)

Records of the Botanical Survey of India. Vol III, No. 2. The vegetation of the districts of Hughli, Howrah and the 24-Parganas, by D. Prain, Esq. Re. 1-12. or 2s. 8d. (3s.)

Rules framed under section 20 of the Indian Mines Act, 1901 (VIII of 1901) prescribing the Compulsory submission of Annual returns of output and labour of Indian Mines. Foolscap 0-0-6. (1s.)

Rules for the Lease or Sale of Waste Lands in India. 1904 edition. Foolscap. Board. Rs. 4 or 6s. (8s.)

Archæological Survey of India. Annual Report, 1902-03. Super-Royal. Cloth. Rs. 20 or £1 10s. (Re. 1 2s.)

Annual Report of the Board of Scientific Advice for India for the year 1903-04. Foolscap. Paper cover. 6s. or 7d. (2s.)

List of Officers in the Department of Revenue and Agriculture, Government of India, and the Departments subordinate to it, corrected to 1st January 1905. As. 8 or 8d. (2s.)

FOREIGN DEPARTMENT.

Report on the Political Administration of the Territories within the Central India Agency for 1902-03. Foolscap Board. Re. 1 or 1s 6d. (3s.)

Report on the Administration of the Civil and Military Station of Bangalore for the year 1902-03. 3s. or 9d. (2s.)

Report on the Administration of Berar for the year 1902-03. Foolscap. Board. Rs. 2 or 3s. (3s.)

Report on the Administration of the Civil and Military Station of Bangalore for the year 1903-04. Foolscap. Limp cover. 3s. or 9d. (2s.)

FINANCE DEPARTMENT.

Report on the Administration of the Mint at Bombay and Calcutta for the year 1903-04 Foolscap. Paper cover. Re. 1 or 1s. 6d. (2s.)

Statistics Compiled from the Finance and Revenue Accounts of the Government of India. Receipts and Disbursemets of Home and Indian Accounts from 1st April 1895 to 31st March 1903. Foolscap. Board. Rs. 2 or 3s. (9s.)

List of Officers in the Finance and Commerce Department, corrected to 1st October, December 1904, January and February 1905 Royal 8vo. Paper cover. 4s. or 5d. (1s.)

COMPTROLLER-GENERAL.

Finance and Revenue Accounts of the Government of India for the year 1903-04. Foolscap. Board. Rs. 2. or 3s. (8s.)

STATISTICAL DEPARTMENT.

Statistics of Cotton Spinning and Weaving in the Indian Mills in June 1904 and in the three months, April to June 1904, compared with the corresponding period of 1902 and 1903, No. 5 of 1904-05. Royal 8vo. Stitched. 2s. or 2d. (1s.) each.

Trade and Navigation Accounts of British India for the months of August, September and October 1904. Nos. 5, 6 and 7 of 1904-05. Royal 8vo. Stitched. 3s. or 3d. (2s.) each.

Accounts of the External Land Trade of British India for the months of June, July and August 1904. Nos. 3, 4 and 5 of 1904-05. Royal 8vo. Stitched. 3s. or 3d. (2s.) each.

Statistics of Cotton Spinning and Weaving in the Indian Mills in July, August, September, October, November, December 1904. Royal 8vo. Stitched. 2s. or 2d. (1s.) each.

Judicial and Administrative Statistics of British India for 1902-03 and preceding years. 8th issue. Foolscap. Board. Rs. 2 or 3s. (10s.)

Accounts of the French Possessions in India in the year ending 31st March 1904 and the four preceding years. Foolscap. Paper cover. 2s. or 2d. (1s.)

Accounts of the Trade of Aden in the year ending 31st March 1904 and the four preceding years. Foolscap. Paper cover. 10s. (1s.)

Area and yield of certain principal crops in India. Sixth issue. Foolscap. Paper cover. 5s. or 6d. (2s.)

Sea-Borne Trade and Navigation Accounts of British India for the months of November, December 1904. January 1905. Nos. 8, 9 and 10 of 1904-05. Royal 8vo. Stitched. 3s. or 3d. (2s.)

Accounts of the External Land Trade of British India for the month of September, October 1904. Nos 6, 7 and 8 of 1904-05. Royal 8vo. Stitched. 3s. or 3d. (2s.)

Agricultural Statistics of India for the years 1898-99 to 1902-03 in two Volumes. Foolscap. Board. Both Volumes. Rs. 3-8s. or 5s. 3d. (12s.)

Accounts relating to the trade carried by Rail and River in India in the quarter ending June 1904, compared with the corresponding period of the years 1902 and 1903. No. 1 of 1904-05. Foolscap. Paper cover. 3s. or 3d. (3s.)

Financial and Commercial Statistics of British India, II issue, 1904. Super-Royal, Paper cover. Re. 1 or 2s. (12s.)

Tariff Shcedules, 1905. Royal 8vo. Stitched. 6s. or 7d. (1s.)

Annual Statement of the Coasting Trade and Navigation of British India in the year ending 31st March 1904. Super-Royal. Board. Rs 2 or 3s. (7s.)

ACCOUNTANT-GENERAL.

History of Services of Gazetted and other Officers serving under the Government of Bengal, corrected to 1st July 1904. In two parts. Royal 8vo. Board. Rs. 5 or 7s. 6d. (13s.)

MILITARY DEPARTMENT.

Return of Wreck and Casualties in Indian Waters, 1902-03. Foolscap. Board. Re. 1 or 1s. 6d. (3s).

Class Hand Books for the Indian Army—Mappillas or Moplahs, by Major P. Holland Pryor. Royal 8vo. Board. Re. 1-4 or 1s. 11d. (5s.)

Hand Book for the Indian Army—Jats, Gujars, and Ahirs, by Major A. H. Bingley. Royal 8vo. Board. Re. 1 or 1s. 6d. (5s.)

Classified List and Distribution Return of the Establishment of the Military Works Services corrected up to 31st December 1904. Royal 8vo. Paper cover 4s. or 5d. (1s.)

RAILWAY BOARD

Administration Report of the Telegraph Department for 1903-04. Foolscap. Paper cover. 3s. or 6d. (2s.)

Public Works Department Classified List of the Subordinate Establishment, corrected to 30th June 1904. Royal 8vo. Paper cover 4s. or 5d. (1s.)

Public Works Department Classified List and Distribution of Establishment corrected up to 31st December 1904. Super-Royal 8vo. Paper cover. Re. 1 or 3s. (4s.)

Selections from the Records of the Government of India in the Public Works Department, No. CCXXXVIII.—Relative Merits of Broad and Metre Gauge Lines of Railway. Foolscap. Board. 4s. or 5d. (1s. 6p.)

Classified List of the Subordinate Establishment corrected up to 31st December 1904. Royal 8vo. Paper. 4s. or 5d. (1s.)

List of new books for sale at Thomason College, Roorkee, which were not advertised before.

Roorkee Treatise on "Railways," 4th Edition, revised by F. Wolly Dod, F.C.S. Price, Rs. 3 per copy.

Roorkee Treatise on "Irrigation Work." By Lieutenant-Colonel J. Clibborn, I.S.C., B.A., L.C.E., C.I.E. Price, Rs. 9 per copy.

Roorkee Treatise on "Sanitary Engineering." Compiled by Lieutenant-Colonel J. Clibborn, I.S.C., B.A., L.C.E., C.I.E. Price, Rs. 4-8 per copy.

Roorkee Manual of "Applied Mechanics," Volume II. The stability of structures mostly by graphic methods, by Lieutenant-Colonel J. H. C. Harrison, R.E. Price, Rs. 3-2 per copy

Roorkee Manual of Hydraulics Price per copy, Re. 1-4. (No. XIX, Elementary Treatise.) By E. F. Tipple, Esq., B.A.

Designs for Wooden Bridges, together with rules for calculating the area of waterway, etc., and Plates. By late Rai Bahadur Kunhya Lal. Price per set, Rs. 4-2

Pamphlet on Examination for Acid Radicals: Tables giving Analysis of Acids. Price per copy, 8a.

Pamphlet on Examination for Acid Bases: Tables giving Analysis of Metallic Bases. Price, 8a. per copy.

List of New Books available for sale in the College Book Depot.

Roorkee Treatise on Civil Engineering, Section XIII. Drawing for Engineer students, Part I. By Major E. H. deV. Atkinson, R.E., Principal, Thomason College, Roorkee. Price per copy Rs. 3-2, including packing, postage, etc.

Hand Book of the Thomason Engineering College, Roorkee. Illustrated. Price Re. 0-12 per copy, including packing, postage, etc.

A list of new books and periodicals for sale at the Library of the Asiatic Society of Bengal, 57 Park Street, Calcutta.

SOCIETY'S PUBLICATIONS.

Journal, Part I, Nos 3 and 4 of 1904, at Rs. 2.
" Part II, Nos. 3 to 5 of 1904, at Re. 2.
" Part III, Nos. 3 and 4 of 1904, at Re. 2.
Proceedings Nos. 7 and 8 of 1904, at 8a.

BIBLIOTHECA INDICA.

Bhatta Dipika. Vol. I, Fasc. 5, at 6a.
Catadusani. Vol. I, Fasc. 2, at 6a.
Clokavartika (English). Fasc. 5, at 12a.
Catasahasrika Prajnaparamita. Part I, Fasc. 3, at 6a.
Caturvarga Cintamani. Vol. V, Fasc., 2, 3, at 6a.
Catapatha Brahmana. Vol. III, Fasc. 5, at 6a.
Mahabhasyaprodipoddyota. Vol. II, Fasc. 12, at 6a.
Nityacara Pradipah. Fasc. 5, at 6a.
Sradhya Kriya Kaumudi. Fasc. 6, at 6a.
Tantravartika (English). Fasc. 3, at 12a
Vidhana Parijata. Vol 1, Fasc 6, at 6a.

List of Books published by the Meteorological Department during the Current Quarter.

Indian Meteorological Memoirs. Vol. XVI, Part II, by Sir John Eliot. Quarto. Paper cover Rs. 3.

List of books published by the Meteorological Department from 1st October 1904 to 31st March 1905.

Monthly Weather Review. April to September 1904. (Illustrated by 6 plates) Quarto. Paper cover. Re. 1 per month

Indian Meteorological Memoirs Vol. XVI. Part II By Sir John Eliot Quarto. Paper cover. Re. 3.

APPENDIX TO

The Calcutta Gazette.

WEDNESDAY, APRIL 19, 1905.

NOTICES TO MARINERS.

THE following Notices are published for general information.

W. A. INGLIS,
Secretary, Marine Department.

CALCUTTA, *the 15th April 1905.*

PACIFIC OCEAN, SOUTH.—TUAMOTU GROUP.

Ravahere Island.—Rocky patches reported to the eastward.

No. 122 (first publication).—The British Admiralty has given notice (No. 212 of 1905) that two rocky patches, with depths of from 5 to 6 fathoms over them, have been seen at a distance of about 8 miles eastward from Ravahere or Dawahaidi island, Tuamotu group; these two patches are about 1¼ cables apart in a north and south direction from each other.

Approximate position, lat. 18° 16′ S., long. 142° 2′ W.

This Notice affects the following Admiralty Charts:—Pacific Ocean, No. 783; Tuamotu archipelago, No. 767: also Pacific Islands, volume III, 1900, page 124; and Supplement, 1903, page 8.

EASTERN ARCHIPELAGO.—SUMATRA, NORTH COAST.

Jambu Ayer or Diamond point.—Intended light.

No. 123 (first publication).—The British Admiralty has given notice (No. 224 of 1905) that it is intended to establish in a screw pile structure, erected in a depth of 9 feet off Jambu Ayer or Diamond point, a *white flashing* light *every five seconds*. It will be elevated 87 feet above high water, and visible in clear weather from a distance of 15 miles. The light will be of the 4th order, the duration of the flash being under one-tenth of a second.

The work was commenced in February, and it is hoped that the light may be exhibited in May.

Approximate position, Diamond point, on Chart 219, lat. 5° 16′ N., long. 97° 30½′ E.

Further Notice will be given when this light has been established.

This Notice affects the following Admiralty Charts:—Bay of Bengal No. 70; Bassein river to Pulo Penang, No. 830; Acheh head to Tyingkok bay, No. 2760; Acheh head to Diamond point, No. 219; Diamond point to Pulo Berhala, No. 1353: Also List of Lights, part VI, 1906, page 63; and China Sea Directory, Vol. I, 1896, page 65.

BAY OF BENGAL—Burma coast.

Kyouk Phyou harbour—Actual depth of water on the Irrawaddy shoal.

No. 105.—(second publication).—The Master of the S.S. *Pachumba* reports that when passing the Irrawaddy shoal, outside Kyouk Phyou harbour, on the morning of the 24th March, he observed at. L. W. S. that rocks were showing 3 feet above water on the shoal. This shoal is marked on the Admiralty Chart as having 2¼ fathoms water at L. W. S. Mariners are accordingly warned.

ARABIA, NORTH-EAST—Persian gulf.

Shat-al-Arab—Mooring buoys to be placed at entrance.

No. 106 (second publication).—A telegraphic communication has been received from the Director of the Royal Indian Marine, stating that it is contemplated mooring buoys at the entrance of the Shat-al-Arab river, in positions making deep water channels, about the middle of April. Mariners are accordingly cautioned not to enter or leave the river after the 15th April without ascertaining whether buoys have been moored.

A further notification will be made as soon as new positions have been determined.

AUSTRALIA—Victoria.

Port Phillip entrance—Sweeping and blasting operations.

No. 107 (second publication).—With reference to Notice to Mariners No. 376, dated 4th November 1904, issued by this Office, the British Admiralty has given further notice (No. 165 of 1905) that, on or about 9th January 1905, sweeping and blasting operations for removing the shoal patches obstructing the entrance into Port Phillip would be resumed.

The steam-vessel employed for this purpose will, when sweeping, display the Code signal X. H. C., and when blasting will hoist letter B, at the masthead. Before the charge is exploded this vessel will give prolonged blasts with the steam whistle, and a red flag will be shown from the larger of the attendant boats.

Caution.—When these signals are displayed mariners are warned not to approach the boats engaged in this work nearer than half a mile, and they are specially requested to keep clear of these vessels when sweeping operations are in progress, as the apparatus renders the vessel's movements slow and uncertain.

Approximate position, lat. 38° 18′ S., long. 144° 38′ E.

This Notice affects the following Admiralty Chart :—Port Phillip entrance, No. 2747a. Also, Australia Directory, vol. I, 1897, page 432.

BAY OF BENGAL—Burma coast.

Rangoon river—Shoal in entrance—Buoy moved.

No. 108 (second publication).—The British Admiralty has given notice (No. 169 of 1905) of the existence of a shoal, of small extent, with a depth of 19 feet over it at low water, in the entrance to Rangoon river; it is situated at a distance of 8¼ cables S. 63° W. from the Upper Eastern buoy, or 2$\frac{9}{16}$ miles S. 88° E. from Survey beacon No. 3.

Also, that Lower Spit buoy has been moved 3½ cables N. 23° E. from its former position, and is now moored with Survey beacon No. 3, bearing N. 88° W., distant 2½ miles, and Elephant point obelisk N. 24° W.

Approximate position, lat. 16° 26′ N., long. 96° 21′ E.

(*Variation 1° Easterly in 1905.*)

This Notice affects the following Admiralty Chart :—Rangoon river, No. 833 : Also, Bay of Bengal Pilot, 1901, page 351.

CHINA SEA—Gulf of Siam.

Middle island—Amended position of rock to the southward.

No. 109 (second publication).—With reference to Notice to Mariners No. 179, dated 27th May 1904, issued by this office, the British Admiralty has given further notice (No. 172 of 1905) that, according to the French Government Chart recently received, the two rocky heads, with depths of 8 and 5 feet over them, described in paragraph 6 of the above notice,

are situated at a distance of 7 cables S. 14° W. from the south point of Middle island, and not $1\frac{6}{10}$ cables S. 34° W. as originally stated.

Approximate position on Chart No. 2725, lat. 10° 26′ N., long. 103° 45¼′ E.

(*Variation 2° Easterly in 1905.*)

NOTE.—A new edition of Chart No. 2725 will shortly be issued.

This Notice affects the following Admiralty Charts:—Bay island to Pulo Obi, No. 2723; Koh Tron, No. 2725; Koh Kut to Bay island, No. 2722: Also, China Sea Directory, vol. II, 1899, page 351.

PACIFIC OCEAN—THE PHILIPPINES—SEBU, EAST COAST.

Capitancillo island—Light established.

No. 110 (second publication).—With reference to Notice to Mariners No. 209, dated 15th June 1903, issued by this Office, the British Admiralty has given further notice (No. 173 of 1905) that the temporary white fixed light exhibited from a tree on Capitancillo island would, on January 1st, 1905, be replaced by a *group flashing* light showing a group of *three white* flashes every *ten seconds* followed by a *red* flash, the eclipses between the white flashes being *one and a half seconds*, and between the groups of white flashes and the red flash *three and a half seconds*; it should be visible in clear weather from a distance of 17 miles, and would be exhibited from a steel tower 80 feet high.

Approximate position, lat. 10° 59′ N., long. 124° 6′ E.

NOTE.—The period of system of the above light must be considered approximate, as the time occupied by the flashes is not included.

This Notice affects the following Admiralty Charts:—Molucca passage to Manila, No. 943; Sulu or Mindoro sea, No. 2578: Also, List of Lights, part VI, 1905, No. 593; and Eastern Archipelago, part I, 1902, page 280.

PACIFIC OCEAN—THE PHILIPPINE ISLANDS—LUZON, MANILA BAY.

Port Kavite—Wreck removed—Buoy withdrawn.

No. 111 (second publication).—With reference to Notice to Mariners No. 434, dated 20th December 1904, issued by this Office, the British Admiralty has given further notice (No 174 of 1905) that the wreck of the *San Juan de Ulloa* in Kañacao bay, port Kavite, having been removed, the buoy marking the position and formerly moored at a distance of 2¼ cables S. 8° W. from Sangley point light-house has been withdrawn.

Approximate position, lat. 14° 29¼′ N., long. 120° 54¼′ E.

(*Variation 1° Easterly in 1905.*)

This Notice affects the following Admiralty Chart:—Port Kavite, No. 975: Also, China Sea, vol. II, 1899, page 307; and Eastern Archipelago, part I, 1902, page 61.

PACIFIC OCEAN—THE PHILIPPINE ISLANDS—LUZON.

Manila breakwater—Wreck to the westward—Buoy.

No. 112 (second publication).—The British Admiralty has given notice (No. 176 of 1905) that the wreck of the brigantine *Flores de Maria* lies sunk, with the foremast above water, to the westward of Manila breakwater now under construction; a buoy, painted in red and black horizontal bands, has been moored in a depth of 30 feet about 30 yards south-westward from the wreck, in a position from which the light on the northern mole at the entrance to Pasig river bears N. 20° E., distant 1¼ miles, and Ermita church N. 78° E.

Approximate position, lat. 14° 35′ N., long. 120° 56¼′ E.

(*Variation 1° Easterly in 1905.*)

This Notice affects the following Admiralty Chart:—Manila bay, No. 976: Also, China Sea, vol. II, 1899, page 310: and Eastern Archipelago, part I, 1902, page 65.

CHINA, SOUTH-EAST COAST.

Cape of Good Hope—Amended position of wreck to the south-eastward.

No. 113 (second publication).—With reference to Notice to Mariners No. 103, dated 1st April 1905, issued by this Office, the British Admiralty has given further notice (No. 177 of 1905) that a wreck, assumed to be that of the S.S. *Workfield*, lies sunk with two masts

above water in a position from which Cape of Good Hope bears N. 17° W., distant about 7¼ miles.

Approximate position, lat. 23° 7′ N., long 116° 51′ E.

(*Variation Nil in 1905.*)

This Notice affects the following Admiralty Charts:—Formosa island, &c., No. 1968; Hong-Kong to the Brothers, No. 1962: Also, China Sea Directory, vol. III, 1904, page 147.

PACIFIC OCEAN—Marshall islands.

Arhno Atoll—Amended position of reef reported to the south-eastward.

No. 114 (second publication).—With reference to Notice to Mariners No. 284, dated 19th August 1904, issued by this Office, the British Admiralty has given further notice (No. 178 of 1905) from an examination of the reckoning kept by the Master of the Schooner *Neptun*, the reef he reported that he had seen south-eastward of Arhno Atoll, Marshall islands, is situated approximately in lat. 7° 6′ N., long. 172° 26′ E., and not in lat. 6° 49′ N., long. 172° 20′ E., as before stated. The reef was searched for in the amended position however by H.I.G.M.S. *Condor*, without success; but as the natives of that Atoll state that there is a reef in this locality, it has been placed on the chart with P.D. against it in the amended position.

This Notice affects the following Admiralty Charts:—Atlantic and Indian oceans, No. 2483; Pacific ocean, No. 2683; Pacific ocean, north-west, No. 781; Marshall islands, No. 983: Also, Pacific Islands, vol. II, 1900, page 274.

CHINA, EAST COAST—Mirs bay.

Tolo channel—Ledge extending from point.

No. 115 (second publication).—The British Admiralty has given notice (No. 179 of 1905) of the existence of a ledge of rocks in Tolo channel, Mirs bay, extending 150 yards in a S. 69° W. direction from the point (45 feet) situated at a distance of 7¼ cables N. 68° W. from Mount Hallowes. This ledge, which is 15 yards wide, has a depth of 9 feet over it at its outer extremity, and about midway between its extremity and the point there is a rock awash at low-water springs.

Approximate position, lat. 22° 27¼′ N., long. 114° 18′ E.

(*Variation Nil in 1905.*)

This Notice affects the following Admiralty Chart:—Tolo harbour, No. 3329: Also, China Sea Directory, vol. III, 1904, page 131.

NEW ZEALAND—North island—Auckland approach.

Whangaparaoa peninsula—Spit extending from—.

No. 116 (second publication).—The British Admiralty has given notice (No. 180 of 1905) that a sand spit, with a depth of 4 to 5 fathoms over it, extends 7 cables in a south-easterly direction from the south-eastern extremity of Whangaparaoa peninsula; from the end of the spit, where there is a depth of 4 fathoms, Tiri Tiri light bears N. 50° E., distant 3 miles.

Approximate position, lat. 36° 37′ 40″ S., long. 174° 51′ 50″ E.

(*Variation 14° Easterly in 1905.*)

This Notice affects the following Admiralty Chart:—Tutukaka head to Mayor island No. 2543: Also New Zealand Pilot, 1901, page 48.

CHINA SEA—Formosa (Taiwan).

Ke lung harbour—Area of submarine defence—Regulations for passing through.

No. 117 (second publication).—The British Admiralty has given notice (No. 192 of 1905) that the area of submarine defence of Ke lung harbour is bounded approximately by a line drawn in a N. 6° W. direction from Rokohei kaku to the north extreme of the Ke lung islands (Keiro to), and another line drawn from the north extreme of the Ke lung islands

in a S. 78° W. direction to a point situated about 2¼ miles north-westward from Banjintai Bi lighthouse.

Approximate position, Banjintai light, lat. 25° 9′ N., long. 121° 44¼ E.

The following regulations are to be observed by vessels desiring to enter or leave Ke lung harbour:—

(1) The area, contained within the abovementioned lines and the shore, is under control of the officer in charge of the Ke lung special submarine mine defence, who is empowered, should necessity arise, to prohibit vessels passing through or anchoring in the prescribed area, excepting in the positions assigned to them.

(2) All vessels inward or outward bound, with the exception of regular mail steamers, and vessels belonging to Government departments, must obtain permission of the officer in charge to enter this area.

(3) No vessels, excepting those belonging to the Army and Navy, should enter this area at night time (sunset to sunrise) without permission.

(4) Vessels proceeding through this area must do so at a speed not exceeding 5 knots.

(5) Fishing, except within the limits specially notified, is prohibited over this area.

This Notice affects the following Admiralty Charts:—Ockseu island to Tung yung, No. 1761; Ke lung harbour, No. 2618: Also, China Sea Directory, vol. III, 1904, page 261.

CHINA—Hong Kong approach—Mawan island.

Kap shui mun (Kap sing mun) light—Alteration in—.

No. 118 (second publication).—The British Admiralty has given notice (No. 207 of 1905) that the two white fixed lights at present exhibited from the western point of Mawan island will be replaced by a *red fixed* dioptric light of the 6th order, elevated 50 feet above high water, and visible in clear weather from a distance of 6 miles. It will be shown from a white mast erected in the same position. There is a white hut at the foot of the mast.

Approximate position, lat. 22° 21′ N., long. 114° 3¼′ E.

This Notice affects the following Admiralty Chart:—Approaches to Hong Kong, No. 1180: Also, List of Lights, part VI, 1905, No. 780a; China Sea Directory, vol. III, 1904, page 63.

AUSTRALIA, SOUTH—Spencer gulf—Approach to port Lincoln.

Cape Donnington—Proposed establishment of a white light.

No. 119 (second publication).—The President of the Marine Board, Port Adelaide, has given notice (No. 3 of 1905) that it is proposed to establish, on Cape Donnington, a White Light, showing red sectors over Dangerous Reef and Boston Island.

Further particulars will be published.

This affects Admiralty Chart No. 2389B.

AUSTRALIA, SOUTH—Spencer gulf.

Secret Rock—A pile beacon to be placed.

No. 120 (second publication).—The President, Marine Board, Port Adelaide, has given notice (No. 4 of 1905), informing Masters of vessels and others that it is intended on the 10th instant, circumstances permitting, to place a Pile Beacon to mark the position of the Secret Rock.

The Beacon, having a diamond-shaped head and painted black, will be erected in lat. 34° 31′ 15″ S., long. 136° 7′ 30″ E. (approximate), and on the eastern edge of the rock in 10ft. L.W.S., with Point Bolingbroke bearing S. 42° W., two miles distant, and the centre of Kirkly Island E. 18° S., distant five miles.

This affects Admiralty Chart No. 2389B.

AUSTRALIA, SOUTH—Gulf St. Vincent.

Port Adelaide—Approach to Semaphore anchorage.

No. 121 (second publication).—The President, Marine Board, Port Adelaide, has given notice (No. 6 of 1905) that recent soundings show about 6in. less water on the four (4) fathom shoal than indicated by Admiralty Charts Nos. 1752 and 2389B. Masters of heavy draught vessels should, therefore, when approaching the anchorage (especially near low water), not bring the old Port Adelaide Lighthouse or the light thereon on a bearing north of N.E. by E. until the green light on the Semaphore Jetty bears S.E. or the two red lights are in line. They may then steer in and select an anchorage according to the vessel's draught.

Vessels leaving the anchorage should steer out N.W. until the above-mentioned bearings are on.

The shoal spot referred to bears from the lighthouse on Wonga Shoal N. 33° 30′ W., distant about 1·3 miles, and from the old structure S. 48° W., distant about 1·9 miles.

This affects Admiralty Charts Nos. 1752 and 2389B.

CHINA—South-east coast.

Cape of Good Hope—Wreck to the south-eastward.

No. 103 (third publication).—The British Admiralty has given notice (No. 163 of 1905) that the wreck of the S.S *Workfield* lies sunk in a depth of 18 fathoms in a position from which Cape of Good Hope bears N. 45° W., distant about 15 miles.

Approximate position, lat. 23° 3⅛′ N., long. 116° 59¾′ E.

(*Variation Nil in 1905.*)

This Notice affects the following Admiralty Charts:—Formosa island, &c., No. 1968; Hong-Kong to the Brothers, No. 1962; Also China Sea Directory, vol. III, 1904, page 147.

BAY OF BENGAL—Chittagong coast.

Karnafuli river—Depth of water in the channels.

No. 104 (third publication).—The Port Officer, Chittagong, has given notice that the following depth of water was found in the channels by soundings taken on the 24th March and reduced to zero:—

	Ft.	in.
Track No 1—Outer bar—		
Disc on diamond	13	0
Track No. 2—Inner bar—		
Disc on diamond	11	6
Ditto Batten beacon on pillar	12	0
Track No. 3—		
Triangle on cross and ball	16	0
Track No. 4—Guptakhally crossing—		
Tripod on diamond	16	0

E. J. Beaumont, Comdr., R.I.M.,
Port Officer of Calcutta.

REGISTERED No. C209.]

No. 16 of 1905.

SUPPLEMENT TO

The Calcutta Gazette.

WEDNESDAY, APRIL 19, 1905.

OFFICIAL PAPERS.

[Non-Subscribers to the GAZETTE *may receive the* SUPPLEMENT *separately on payment of five rupees per annum if delivered in Calcutta, or seven rupees and eight annas if sent by post.]*

CONTENTS.

	Page.
Report on the Administration of the Opium Department in the Lower Provinces, Bengal, during the year 1903-1904	545
Rabi Crops in Bengal, 1904-1905	551
Decentralisation of Municipal work in Calcutta ...	551
Liberality of Raja Jogendra Narain Roy, of Laigola, in the district of Murshidabad	552
Liberality of the Maharaja of Mourbhanj	555
Weather and Crop Report for the week ending the 17th April 1905	556
Circular and Western Canals for the week ending Saturday the 15th April 1905	559
Results of the Meteorological Observations taken at the Alipore Observatory from 9th to 15th April 1905	561
Meteorological Report of the Province of Bengal for the month of March 1905	562
Table of Rainfall recorded at stations in Bengal in March 1905	564
Bengal Central Railway during the month of January 1905	604
Weekly Return of Traffic Receipts on Indian Railways ...	606

REPORT ON THE ADMINISTRATION OF THE OPIUM DEPARTMENT IN THE LOWER PROVINCES, BENGAL, DURING THE YEAR 1903-1904.

NOTIFICATION.

No. 25T.-O.—The 12th April 1905.—The following extracts from the Report of the Board of Revenue, on the Administration of the Opium Department during the year 1903-1904, are published for general information.

E. A. GAIT,
Offg. Secy. to the Govt. of Bengal.

No. 1743B., dated Calcutta, the 7th March 1905.

From—H. F. SAMMAN, Esq., I.C.S., Offg. Secretary to the Board of Revenue, L. P.,
To—The Secretary to the Government of Bengal, Financial Department.

5. *Check-measurements by Gazetted officers of the Department.*—The number of villages in which check-measurements were conducted in the Bihar Agency was 9,609, as compared with 10,333 in the preceding year, the decrease being due to the smaller number of officers on duty during the touring season. On the other hand, the area test-measured rose from 16,280 bighas to 20,006; and there was a similar increase in the number of plots measured and of the raiyats

whose lands were measured. * * * * The check-measurements in Benares covered 116,468 plots belonging to 67,964 raiyats in 19,050 villages, the corresponding figures in the previous year were 103,819, 60,455, and 18,351. * * * *

As regards the proportion of cases in which the area recorded by the departmental subordinates was found to be incorrect, the Bihar Agent writes that in Patna discrepancies were found in the measurements of two muharrirs who were duly punished. Cases of short cultivation were discovered in Hajipur, Aliganj and Motihari; and some of pretended cultivation in Gaya, Tehta, Hazaribagh and Giridih. The Opium Agent, Benares, reports that in most Divisions the measurements of the muharrirs were found to have been made with sufficient accuracy except those in Allahabad and Hardoi, where five muharrirs had to be punished for neglect of duty.

The results obtained from the check-measurements made during the year have been of undoubted value, and the Board trust that this important work will continue to receive the careful attention it deserves. * * * *

6. *Settlements.*—In the Bihar Agency 344,730 bighas were settled as compared with 346,956 in the previous year, showing a further decrease of 2,226 bighas which is ascribed mainly to the rejection of unprofitable cultivation. * * * *

Experiments in poppy cultivation by indigo-planters, to which reference was made in last year's report, were continued during the year under review, but with less success. Better results, however, are anticipated in the current year. * * * *

In the Benares Agency the total area settled amounted to 693,033 bighas as compared with 624,562 bighas in the preceding year, showing an increase of 68,471 bighas. To this increase every Division contributed except Hardoi and Sitapur. * * * *

The Agent reports that the desirability of securing, wherever possible, the personal attendance of cultivators to receive advances was kept in view, but there was no overstraining in this direction. In the Fyzabad Sub-Division the percentage of attendance dropped from 93 to 84, and in the Fyzabad Division from 92 to 86 per cent. In the Patherwa and Salempur Sub-Divisions of the Gorakhpur Division the percentages were as high as 95 and 93, respectively, whereas in the Basti Division, where the number of petty cultivators is large, the percentage of attendance in the several sub-divisions varied from 75 to 85.

In Bihar, the only Sub-Agency that approaches the Benares standard of personal attendance is Tirhut. * * * * The percentage has, however, generally increased. With the *khatadari* system it is not possible to secure a high rate of personal attendance. The cultivators rely upon the *khatadar* who acts as their representative, the more so, as it saves them time and trouble. There is little doubt, however, that it is to the ultimate interest of the Government as well as that of the cultivators that the latter should have personal and direct dealings with the Gazetted officers of the department, and it is to this cause, perhaps, more than to any other that the popularity of opium cultivation in the Benares Agency is due.

7. *Measurements and actual cultivation.*—In the preceding year both Agencies showed a deficiency in the area sown, as compared with that settled, amounting in Bihar to 6,392 bighas and in Benares to 12,551. In the year under review Bihar showed a deficiency of only 2,171 bighas, whereas Benares showed an actual excess of 17,429 bighas. The failures due to climatic causes affected 10,551 bighas in Bihar and 13,940 bighas in Benares as compared with 7,781 and 12,303, respectively, in 1902-1903. In Bihar the largest failure, viz., 4,069 bighas in Tirhut, is reported to have been due "to the sowings having failed altogether in large areas of unirrigated cultivation owing to total want of rain during the latter half of October and the whole of November." The area lost by non-fulfilment of engagements was considerably less in both Agencies than that reported during the preceding year. In Bihar the total loss on this account was 6,141 bighas, out of which no less than 3,648 bighas occurred in Tirhut where the loss amounted to over 13 per cent. of the total area engaged for. These figures are remarkable,

the more so as Tirhut is the only Sub-Agency in Bihar where the percentage of personal attendance at settlements is high. The Agent will be asked to submit a further report upon the subject. In Benares the total loss through non-fulfilment of engagements fell from 19,686 to 4,981 bighas, the most noticeable failure being in the Bareilly Division, the settlements of one of the Sub-divisions of which were, it is said, open to serious objections.

The difference between the area settled and that actually sown in the Benares Agency calls for some further remarks. The figures in Statement II shew a deficiency of 4,051 bighas in 6 divisions accompanied by an excess of 21,480 bighas in 14 divisions. The most marked fall was in Allahabad which sowed 1,644 bighas short; about half being in the Fatehpur Sub-division (Mr. A. C. Roy), where the deficiency was about 7 per cent., and half in the Sarsa Sub-division (Mr. Bean), where the deficiency was over 10 per cent. "Both of these sub divisions," the Agent remarks, "have been unsatisfactorily worked for some time past." The Fatehgarh Division gave the greatest increase, namely, 4,666 bighas. Rae Bareli comes next with about 3,300 bighas and then Mainpuri with 2,900 bighas, while three other Divisions, viz., Budaon, Bara Banki and Fyzabad together made up another 7,000 bighas.

Mr. House considers the mere fact that there should have been any deficiency at all in a year following upon a bumper season as an unmistakable indication that the settlements were injudiciously high. He has accordingly made further enquiries into this matter, the result of which has disclosed a tendency in all parts of the Benares Agency to make advances too freely, especially to new cultivators. Mr. House has ascertained that about 250,000 cultivators, or one-fourth of the total number, sowed either not at all or in greater or less defect, their aggregate short sowings amounting to about 38,000 bighas. The gross area sown in excess was therefore more than 55,000 bighas. The Agent reports that in some Divisions it is the practice for cultivators to sow without advances and without formal engagements, the area thus obtained being exhibited only in the measurement returns and not in the settlement figures, but this area, it is estimated, does not exceed 3,000 bighas at the outside. Apart, therefore, from this area, "there must" as Mr. House remarks "have been thousands of cases in which cultivators sowed in excess, utterly irrespective of the terms of their engagements. This is not merely contrary to rule, but it renders control difficult and might prove a source of much embarrassment." The eagerness of the cultivators to grow poppy is remarkable, but the Board agree with Mr. House that it is desirable "while not discouraging the giving of a reasonable excess, to insist on cultivators keeping as far as possible within cover of the terms of their engagements," and notice with approval that he has now passed orders to this effect.

8. *Weather and general results.*—In the Bihar Agency heavy rain fell at the end of October in all the Sub-Agencies except Muzaffarpur and Hazaribagh and provided favourable conditions for early and successful sowings. The young crop looked exceedingly well and promising. But the cloudy weather and rain in February injuriously affected the crop, especially in places where lancing operations had commenced, and finally in the early part of March, when collections were in full swing, strong west winds began to blow which retarded the exudation of the drug and quickly dried up the scarified capsules.

In Benares the monsoon of 1903 ended with exceptionally heavy falls of rain in the first fortnight of October. Sowings were general in the third week in October, except in low-lying lands. Germination was good, but the intense heat which followed was disastrous, and second and third sowings were not uncommon. The plant at first did well, but in many Divisions it soon became apparent that the soil was oversaturated when the sowings took place, while damage by caterpillars was general, owing probably to the insufficient tillage of the soil after the heavy rainfall. There was a sprinkling of rain in some places about the end of December, but otherwise the weather was dry and clear up to the middle of January, when rain fell in the south-east of the Agency and in some other parts. In the third week of February some rain also fell, and in the early part of March the rainfall was general, and was accompanied in three or four divisions by hail. The cloudy weather which prevailed at the end of February and in the early part of March interfered with collections and rendered difficult the manufacture of good leaf.

10. *Outturn of opium.*—* * * * The *damdeta* produce at 70° consistence in the two Agencies was 12,745 maunds less than that of the previous year. In Bihar the general average gross produce per bigha (excluding failures) was 3 seers 14 chitaks and 2 kutchas during the year under report, against 4 seers 3 chitaks in the preceding year, and 3 seers 6 chitaks and 3 kutchas on the average of the preceding seven years. In the several sub-agencies the average varied from 5 seers 11 chitaks 3 kutchas in Tehta to 1 seer 11 chitaks in Bettiah. No explanation of this variation has been given. In Benares the average produce per bigha fell from 5 seers 13 chitaks in the preceding year to 4 seers 9 chitaks during the year under report. This is, however, higher than the average (4 seers 7 chitaks) of the preceding seven years. The best divisional average was that of Budaon (6 seers), and the worst that of Cawnpore (3 seers) where some damage was done by hail.

15. *Consistence of the season's opium.*—The average consistence of the opium manufactured in the Bihar Agency was 74·68° as compared with 73·80° during the previous year, the improvement being due to the strong west winds that prevailed at the time of collection. On the other hand the consistence of the drug in the Benares Agency was abnormally low, the average being 67·98°, as compared with 70·72° in 1902-1903, which was also the average of the last ten years. This decline is reported to be due partly to the oversaturation of the soil at the time of sowing and partly to the cloudy weather with which the season closed.

21. *Abolition of* khurchan *in the Benares Agency.*—"The chief incident of the weighment season," writes the Benares Agent "was the abolition of *lambardars' khurchan*, and the substitution therefor of a commission calculated upon the yield of each license, the effect of which is that Government now pays for the services of the *lambardars* instead of saddling the cultivators with this cost. In several Divisions I was informed that the change was received by the cultivators with absolute indifference, but in others it was welcomed by the cultivators as much as it was welcomed by the officers of the Department. In one Division a curious matter came to my notice. The *lambardars* had previously been in the habit of dividing the *khurchan* with the cultivators. This year, notwithstanding the fact that nothing had been taken from the latter, they insisted on the *lambardars* dividing with them the commission paid by Government." The abolition of *khurchan* was an excellent measure, as it furnished a constant source of dispute between the *lambardar* and his *asamis*. The additional charge to Government is not large.

23. *Advances for wells.*—The advances made for the construction of wells were in both Agencies much below those of the preceding year. The outstanding balance in the Bihar Agency fell accordingly, but that in the Benares Agency shows an increase of Rs. 5,281. The Bihar Agent reports that the officers of the Department have shown no relaxation in their efforts to popularize the system. But the figures of the year are somewhat disappointing. In the Sub-Agencies of Gaya, Patna and Monghyr the landlords are said to be opposed to their tenants improving their holdings by sinking new wells; while in Bettiah, Motihari and Muzaffarpur the cultivators themselves are, as was remarked last year, averse to employing irrigation in lands that are usually unirrigated. In Tirhut, however, there are indications of improvement, large advances being taken in that Sub-Agency during the year on account of the almost complete failure of rain in November. The wells thus constructed not only irrigate poppy-lands but other lands as well, and are a great standby in years of deficient rainfall.

Mr. Bright remarks: "There is no doubt whatever that even the small number of wells which we have been able to get constructed in the past have been of permanent value to the raiyats."

In Benares the advances made last year were about Rs. 20,000 less than in the year before. This, the Agent thinks, is not surprising considering the nature of the season.

With reference to the orders contained in paragraph 5 of the Resolution of Government on the Opium Report for 1902-1903, rules regarding the grant of well advances, similar to those in force in Benares, have recently been framed by the Board in consultation with the Opium Agent, Bihar.

31. *Cost of a chest of Provision Opium and net revenue.*—During the calendar year 1904, 48,000 chests of provision opium were sold in equal proportions from Bihar and Benares, the average prices realised for a chest from each Agency were Rs. 1,638 and Rs. 1,593, respectively, or Rs. 1,616 for both combined, and the total sale-proceeds amounted to Rs. 7,75,58,170. The total cost of manufacture of the produce sold (including Presidency charges, &c.) amounted to Rs. 1,18,41,880 in Bihar and to Rs. 1,17,56,677 in Benares, or a total of Rs. 2,35,98,557, giving an average cost per chest of Rs. 492. The net revenue derived from opium during the two calendar years 1903 and 1904 amounted to Rs. 3,97,83,395 and Rs. 5,39,59,613, respectively.

32. *Sales.*—The opium sales during the twelve months from November 1903 to October 1904, comprised 23,025 chests manufactured in 1901-1902 and 24,975 chests manufactured in 1902-1903, in all 48,000 chests, of which half was taken from each Agency in monthly lots of 4,000 chests. The number of chests sold during the twelve months was the same as that sold during the previous year.

* * * * As compared with 1902-1903 the average prices of Bihar and Benares opium for the twelve months under notice showed an increase of Rs. 346 and Rs. 308 per chest, respectively. This is mainly attributed to the increased demand for foreign opium in the China markets owing to the political disturbances in Korea and Manchuria, which have affected the cultivation and transport of the native drug.

33. The total outturn of provision opium during the year 1903-1904 was 50,000 chests and the balance of the previous year's crop amounted to 31,762 chests. The number of chests available for sale during 1905 is therefore 81,762. In accordance with the orders of the Government of India communicated with the Bengal Government order No. 1626T.—R., dated the 30th June 1904, 48,000 chests or 4,000 chests monthly, made up of 2,000 chests each of Bihar and Benares opium, will be sold during the year, and there will therefore be left on the 1st January 1906 a reserve of 33,762 chests, viz., 16,768 of Bihar and 16,994 of Benares opium.

34. *Breaches of the Opium Laws.*—The number of prosecutions under Act XIII of 1857 was quite nominal in the Bihar Agency, and was small also in Benares. Under Act I of 1878 the number of cases shewed an increase of 86 in Bihar and a decrease of 70 in Benares. The percentage of fines realised in Bihar was very low, viz., only 61 as compared with 83 in the previous year. At the same time the amount paid in rewards was actually in excess of the fines *imposed*, whereas in the previous year it had been slightly less than the amount *realised*. On the other hand in Benares the realizations shewed a marked improvement, whereas the percentage of rewards paid shewed a heavy fall.

36 *Miscellaneous*—(*a*). *Utilisation of survey maps and settlement records.*—The final orders of Government (No. 3723, dated the 25th August 1904) on this subject were that His Honour the Lieutenant-Governor agreed with the Board of Revenue that the Opium Department would derive no benefit from the use of the records of the Survey Department which would be at all commensurate with the cost and labour involved in the procedure. The question of the utilisation of the survey records by the Opium Department has therefore been dropped.

* * * * * *

(*c*) *Position and prospects of the Gazetted Officers of the Department.*—The position and prospects of the officers of the Department have been materially improved by the orders of the Secretary of State which were received towards the close of the year. Under these orders the scale of personal salaries up to Rs. 600 a month has been revised with a view to accelerating promotion, and the system of personal salaries has been extended up to the grade of Rs. 800. The pay of probationers has been raised to Rs. 200 a month till they pass their Departmental Examinations and Rs. 250 after; and officers, on subsequent admission to the sanctioned cadre, are permitted to count service for promotion from the date on which they commenced to draw Rs. 250. The question of the adequacy of the staff is under consideration.

* * * * * * *

(*e*) *Abolition of the Giridih Subdivision of the Hazaribagh Sub-Agency.*—For reasons stated in their letter to Government No. 1058B., dated the 2nd

February 1904, the Board have approved of the Bihar Agent's proposal that Giridih should be abolished as a sub-division with effect from the 1st April 1904.

* * * * * * * *

(*g*). *Revision of the Departmental Manuals and Account Rules.*—* * * * *Bihar Opium Manual.*—Part I.—This part has been finally approved by the Board and will be published along with the other parts when they are ready for issue.

Parts II and III.—These parts have been thoroughly examined, and a clean proof asked for from the press.

Benares Opium Manual.—Part I.—This part has been delayed on account of the non-receipt of the revised Excise Rules of the United Provinces Government. It has now been decided not to include these rules in the Opium Manual, so no further delay is expected in the completion of this part.

Part II.—The revised rules in this part were discussed by the Honorable Member with the Agent during his recent tour in the Benares Agency. The Agent's final opinion on certain points is now awaited.

Part III.—The examination of this part has been finished.

Part IV (Bihar and Benares)—This part has been finally passed and approved by the Board and will be published as soon as the other parts are ready.

* * * * * * *

38. *Merits of Officers.*—The thanks of the Board are due to the Agents for the efficient performance of their duties. Messrs. Bright and House are both tried and experienced officers and have done much to remove existing defects and introduce improvements, while Mr. Duke, who acted only for a few months, showed much zeal as well as a considerable grasp of the subjects that came before him. Both the Agents acknowledge the good services rendered by the officers subordinate to them. At their instance the Board desire to bring the good work done by the following officers to the notice of Government:—Messrs. J. Christian, Field, J. C. Roy and Mackertich in Bihar, and Messrs. Kennedy, G. A. Levett-Yeats, Bryson, Delmerick and Harris in Benares.

RABI CROPS IN BENGAL, 1904-1905.

THE following note is published for general information.

R. W. CARLYLE,
Offg. Chief Secy. to the Govt. of Bengal.

The 11th April 1905.

DEPARTMENT OF LAND RECORDS AND AGRICULTURE, BENGAL.

Forecast of the Rabi Crops of Bengal, 1904-1905.

Explanatory.—This forecast furnishes estimates of the area and outturn of the *rabi* crops, with the exception of wheat, cotton, oilseeds, and sugarcane, for which separate forecasts are issued. The crops included in this forecast are summer rice, barley, gram, tobacco, poppy and other food and non-food crops which are harvested between February and April. These latter embrace the important pulses, *rahar*, *kalai*, *mung*, *peas*, *lentils*, *khesari*, and *kurti*, also buckwheat, *cheena* potatoes, *yams*, melons, *chillies* and other spices as well as oats and *rabi* vegetable crops.

2. *The character of the season.*—Rainfall in October was for the most part deficient. Bihar is the only Division in which the rainfall was above the normal. Drought prevailed since then until January when rainfall was again general. In February the *rabi* crops were seriously jeopardised by hail, frost, and rain. The damage occurred chiefly in the Bihar districts where the bulk of the *rabi* crops are grown; but the Rajshahi Division also suffered to some extent. *Rahar*, tobacco, *khesari*, *peas* and vegetable seem to have suffered most severely, and in the Patna district linseed. On the whole the season was very unfavourable one for the growth of crops in the northern part of the province.

3. *Area sown.*—The normal area sown with the various *rabi* crops in the province dealt with in the forecast amounts to, according to the district returns which are summarised in Appendix I, 10,040,400 acres as against 10,053,300 acres, which was the normal area sown last year. The change is due to the revision of estimates of normal area by the District Officers of Hooghly, Nadia, Jessore Dinajpur, Jalpaiguri, Mymensingh, Noakhali, Purnea, Angul, and Ranchi. The area actually sown this year is estimated at 9,405,100 acres against 9,605,500 acres sown last year.

According to the figures of District Officers, 4,705,724 acres out of the normal area and 2,462,495 acres out of the current area represent "ascertained areas," the remaining figures in each case being approximations.

4. *Outturn.*—From Appendix I it will be seen that only Balasore expects a 100 per cent. crop. In five districts, viz., 24-Parganas, Khulna, Darjeeling, Backergunge, and Bhagalpur, the estimates vary from 90 to 99 per cent.; in nine between 80 to 89, and in 18 others between 70 and 79 per cent. Nine districts anticipate a crop between 60 to 69 per cent., while Nadia, Jalpaiguri, and Palamau expect an outturn varying from 50 and 59 per cent.

According to the estimates of the District Officers, the outturn for the province, as a whole, amounts to only 75 per cent. of a normal crop as against 87 per cent., which was their estimate for last year. Considering the damage caused by frost in February, the estimate of the District Officers is not unduly pessimistic. In fact, I should be inclined to reduce the figure to 70 per cent. I have not however changed the figures reported from the districts.

5. *Gross outturn of summer rice.*—As shown in Appendix II, the gross yield of summer rice for the province may be put down at 2,873,100 cwt. as against 2,923,800 cwt. of last year.

CALCUTTA,
The 30th March 1905.

N. D. BEATSON-BELL,
Offg. Director of Land Records and Agriculture, Bengal.

APPENDIX I.

Forecast of the Rabi *crops of Bengal, 1904-1905.*

1	2	3	4	5	6	7	8	9	10	11
DIVISION AND DISTRICT.	Total area of district in acres.	Total area of district estimated to be under cultivation in acres.	Names of *rabi* crops.	Approximate normal area under each specified *rabi* crop in acres.	Approximate area last year under each specified *rabi* crop in acres (1903-1904).	Estimated area this year under each specified *rabi* crop in acres (1904-1905).	Taking 100 to represent the normal outturn, how much represented the outturn last year (1903-1904)?	Taking 100 to represent the normal outturn, how much will represent this year's outturn (1904-1905)?	Remarks by District Officers.	Remarks by the Department of Land Records and Agriculture, Bengal.
Burdwan Division.										
Burdwan ...	1,687,600	1,284,300	Barley	9,700	8,400	7,500	70	61	The decrease in the outturn is due to unfavourable rainfall.	
			Boro or summer rice ...	800	300	300	70	60		
			Gram	11,400	9,500	9,100	81	74		
			Other *rabi* cereals and pulses.	67,800	55,200	50,700	78	70		
			Other *rabi* food-crops (not separately reported), *e.g.*, potatoes, yams, melons, and others.	49,800	39,800	39,800	96	76		
			Total food-crops ...	139,300	113,200	107,400	82	73		
			Tobacco	600	400	400	71	70		
			Other *rabi* non-food crops (not separately reported), *e.g.*, spices, oats, &c.	3,100	1,400	1,200	69	93		
			Total non-food crops ...	3,700	1,800	1,600	65	77		
			GRAND TOTAL ...	142,900	115,000	109,000	82	73		

1	2	3	4	5	6	7	8	9	10	11
Division and District.	Total area of district in acres.	Total area of district estimated to be under cultivation in acres.	Names of *rabi* crops.	Approximate normal area under each specified crop in acres.	Approximate area last year under each specified *rabi* crop in acres (1903-1904).	Estimated area this year under each specified *rabi* crop in acres (1904-1905).	Taking 100 to represent the normal outturn, how much represented the outturn last year (1903-1904)?	Taking 100 to represent the normal outturn, how much will represent this year's outturn (1904-1905)?	Remarks by District Officers.	Remarks by the Department of Land Records and Agriculture, Bengal.
Burdwan Division—*concld.*										
Birbhum ...	1,121,920	734,800	Barley	500	400	200	75	75	The deficient rainfall in November and excessive cold in January is the cause of short outturn.	
			Gram	7,000	7,000	6,500	75	75		
			Other *rabi* cereals and pulses.	3,500	3,000	3,000	75	75		
			Other *rabi* food-crops (not separately reported), *e.g.*, potatoes, yams, melons, and others.	1,000	1,500	1,000	75	75		
			Total food-crops ...	11,500	11,900	10,800	75	75		
			Other *rabi* non-food crops (not separately reported), *e.g.*, spices, oats, &c.	700	800	700	75	75		
			Total non-food crops ...	700	800	700	75	75		
			Grand Total ...	12,200	12,700	11,500	75	75		
Bankura ...	1,377,440	642,900	Barley	2,000	3,470	2,800	75	75	The decrease in the area sown is due to want of rain at the sowing season.	
			Boro or summer rice ...	500	400	400	75	75		
			Gram	6,500	7,040	6,500	75	75		
			Other *rabi* cereals and pulses.	9,000	9,000	8,000	75	75		
			Other *rabi* food-crops (not separately reported), *e.g.*, potatoes, yams, melons, and others.	2,500	3,000	2,800	75	75		
			Total food-crops ...	21,500	23,600	22,400	75	75		

			Tobacco	1,300	1,700	1,600	75	75	
			Opium (poppy)	9,600	15,000	14,000	75	75	
			Total non-food crops ...	11,100	16,700	15,600	75	75	
			GRAND TOTAL ...	32,900	40,200	38,000	75	75	
Midnapore ...	5,319,040	2,190,600	Barley	1,200	1,200	1,200	73	75	The season has been favourable on the whole, but there was lack of rain in October and excessive rain in February.
			Boro or summer rice ...	6,000	5,100	5,400	54	75	
			Gram	2,500	2,300	2,300	54	75	
			Other *rabi* cereals and pulses.	156,400	161,000	161,000	55	75	
			Other *rabi* food-crops (not separately reported), *e.g.*, potatoes, yams, melons, and others.	47,200	41,600	41,600	73	75	
			Total food-crops ...	215,300	211,200	211,700	59	75	
			Tobacco	4,000	3,400	3,400	94	75	
			Other *rabi* non-food crops (not separately reported), *e.g.*, spices, oats, &c.	52,400	47,900	47,900	80	75	
			Total non-food crops ...	56,400	51,300	51,300	80	75	
			GRAND TOTAL ...	271,700	262,500	263,000	63	75	
Hooghly ...	1,687,300	488,900	Barley	800	600	700	84	70	The figures in column 5 have been revised. Low outturn is due to want of seasonable rainfall.
			Boro or summer rice ...	12,000	10,300	8,500	75	71	
			Gram ...	400	400	500	77	64	
			Other *rabi* cereals and pulses.	22,100	22,800	21,000	91	65	
			Other *rabi* food-crops (not separately reported), *e.g.*, potatoes, yams, melons, and others.	10,900	8,100	9,200	70	69	
			Total food-crops ...	46,200	42,200	39,900	83	67	
			Tobacco	1,500	1,400	1,300	68	62	
			Other *rabi* non-food crops (not separately reported), *e.g.*, spices, oats, &c.	300	300	300	100	70	
			Total non-food crops ...	1,800	1,700	1,600	74	63	
			GRAND TOTAL ...	48,000	43,900	41,500	83	67	

1	2	3	4	5	6	7	8	9	10	11
Division and District.	Total area of district in acres.	Total area of district estimated to be under cultivation in acres.	Names of *rabi* crops.	Approximate normal area under each specified *rabi* crop in acres.	Approximate area last year under each specified *rabi* crop in acres (1903-1904).	Estimated area this year under each specified *rabi* crop in acres (1904-1905).	Taking 100 to represent the normal outturn, how much represented the outturn last year (1903-1904)?	Taking 100 to represent the normal outturn, how much will represent this year's outturn (1904-1905)?	Remarks by District Officers.	Remarks by the Department of Land Records and Agriculture, Bengal.
Presidency Division.										
24-Parganas ...	3,874,881	1,079,700	Barley	100	100	100	100	100		
			Boro or summer rice ...	4,000	3,600	3,400	100	98		
			Gram	6,400	6,300	6,300	99	99		
			Other *rabi* cereals and pulses	32,600	27,500	27,500	100	100		
			Other *rabi* food-crops (not separately reported), *e.g.*, potatoes, yams, melons, and others ...	5,500	5,100	5,300	96	99		
			Total food-crops ...	48,600	42,600	42,600	99	99		
			Tobacco	3,600	3,000	3,000	99	99		
			Other *rabi* non-food crops (not separately reported), *e.g.*, spices, oats, &c.	1,600	1,200	1,200	100	100		
			Total non-food crops ...	5,200	4,200	4,200	99	99		
			Grand Total ...	53,800	46,800	46,800	99	99		

Kadia ...	1,788,100	1,648,800	Barley	7,800	6,500	6,000	65	65	The recent cold and rain have damaged the crops, hence the decrease in the outturn. The decrease in the area sown as compared with that of previous year is due to want of rain during the sowing season.
			Rice or summer rice ...	400	100	1,000	60	61	
			Gram	22,800	20,700	24,000	56	54	
			Other rabi cereals and pulses	22,600	70,500	67,000	61	64	
			Other rabi food-crops (not separately reported), *e.g.*, potatoes, yams, melons, and others ...	1,000	7,200	11,000	64	69	
			Total food-crops ...	124,500	103,900	115,000	59	54	
			Tobacco	20,000	3,000	4,000	74	66	
			Other rabi non-food crops (not separately reported), *e.g.*, spices, oats, &c.	21,800	6,000	7,300	75	60	
			Total non-food crops ...	111,800	10,400	11,300	75	63	
			GRAND TOTAL ...	236,400	198,400	166,700	60	55	
Murshidabad	1,271,200	988,600	Barley	64,600	60,600	71,000	79	77	The decrease in the outturn is due to extreme cold and frost.
			Rice or summer rice ...	1,200	1,800	2,100	86	64	
			Gram	99,600	82,800	75,700	56	69	
			Other rabi cereals and pulses ...	96,000	36,800	46,800	88	88	
			Other rabi food-crops (not separately reported), *e.g.*, potatoes, yams, melons, and others	3,000	3,100	3,300	88	68	
			Total food-crops ...	264,300	187,300	203,600	73	65	
			Tobacco	900	700	900	76	66	
			Other rabi non-food crops (not separately reported), *e.g.*, spices, oats, &c. ...	1,000	1,800	2,200	69	55	
			Total non-food crops ...	1,900	2,510	3,100	71	60	
			GRAND TOTAL ...	266,100	189,800	206,700	73	65	

1	2	3	4	5	6	7	8	9	10	11
Division and district.	Total area of district in acres.	Total area in district estimated to be under cultivation in acres.	Names of rabi crops.	Approximate normal area under each specified rabi crop in acres.	Approximate area last year under each specified rabi crop in acres (1903-1904).	Estimated area this year under each specified rabi crop in acres (1904-1905).	Taking 100 to represent the normal outturn, how much represented the outturn last year (1903-1904)?	Taking 100 to represent the normal outturn, how much will represent this year's outturn (1904-1905)?	Remarks by District Officers.	Remarks by the Department of Land Recor s and Agriculture, Bengal.
Presidency Division—concld.									Normal area under other rabi food-crops has been revised.	
Jessore	1,674,000	1,130,000	Barley	7,500	2,400	2,600	45	64		
			Rice or summer rice ...	2,500	2,500	2,500	50	70		
			Gram	22,000	16,000	17,000	47	60		
			Other rabi cereals and pulses	133,000	116,000	121,400	68	68		
			Other rabi food-crops (not separately reported), e.g., potatoes, yams, melons, and others	9,500	1,400	4,900	68	68		
			Total food-crops ...	181,500	138,500	148,500	60	67		
			Tobacco	97,700	98,800	91,000	75	75		
			Other rabi non-food-crops (not separately reported), e.g., spices, oats, &c. ...	3,800	2,700	3,000	61	67		
			Total non-food-crops ...	80,800	83,800	82,000	73	74		
			GRAND TOTAL ...	212,800	168,000	176,500	61	68		

Khulna ...	3,103,[illegible]	870,[illegible]	*Boro* or summer rice ...	[illegible]	[illegible]	[illegible]	90	[illegible]	
			Gram	100	100	100	100	100	
			Other *rabi* cereals and pulses	11,000	10,000	10,000	90	89	
			Total food-crops ...	96,900	93,500	93,500	96	97	
			Tobacco	5,000	4,900	4,900	90	100	
			Other *rabi* non-food-crops (not separately reported), *e.g.*, spices, oats, &c.	6,100	5,200	5,200	94	98	
			Total non-food-crops ...	11,100	10,100	10,100	97	99	
			GRAND TOTAL ...	108,000	103,600	103,600	96	97	
Rajshahi Division.									
Rajshahi ...	1,[illegible],040	1,[illegible],100	Barley	16,900	11,400	11,900	100	90	Owing to excessive cold the *rabi* crops have been slightly damaged, hence the outturn is expected below normal.
			Boro or summer rice ...	46,400	41,000	40,500	100	90	
			Gram	18,300	13,000	13,500	102	85	
			Other *rabi* cereals and pulses	130,000	125,000	125,000	100	80	
			Other *rabi* food-crops (not separately reported), *e.g.*, potatoes, yams, melons, and others ...	6,100	5,300	5,000	100	90	
			Total food-crops ...	214,000	195,700	196,100	100	83	

1	2	3	4	5	6	7	8	9	10	11
Divisions and Districts.	Total area of districts in acres.	Total area in districts estimated to be under cultivation in acres.	Name of rabi crop.	Approximate normal area under each specified rabi crop in acres.	Approximate area last year under each specified rabi crop in acres (1903-1904).	Estimated area this year under each specified rabi crop in acres (1904-1905).	Taking 100 to represent the normal outturn, how much representative is the outturn last year (1903-1904)?	Taking 100 to represent the normal outturn, how much will represent this year's outturn (1904-1905)?	Remarks by District Officers.	Remarks by the Department of Land Records and Agriculture, Bengal.
Rajshahi Division—	—	—	—	—	—	—	—	—	—	
Rajshahi.	—	—	—	—	—	—	—	—	—	
Districts =	5,005,680	1,888,880								
			Tobacco	5,200	5,200	4,000	90	80		
			Gram	1,100	700	800	100	100		
			Other rabi non-food-crops (not separately reported), e.g., spices, oils, &c. ...	35,000	35,000	35,000	100	100		
			Total non-food-crops ...	41,300	41,000	45,800	100	100		
			GRAND TOTAL ...	256,000	256,200	280,000	100	100		
			Rice summer rice	200	...	200	...	65	The area under here or summer rice has been partly stored. Low outturn is due to want of sufficient rainfall.	
			Rice	12,000	12,000	12,000	90	65		
			Other rabi cereals and pulses	1,300	1,300	1,500	100	65		
			Other rabi food-crops (not separately reported), e.g., potatoes, yams, onions, and others ...	25,000	25,000	25,000	100	65		
			Total food-crops ...	38,700	41,700	38,800	95	70		
			Tobacco	14,000	14,000	14,000	70	60		
			Other rabi non-food-crops (not separately reported), e.g., spices, oils, &c. ...	100	100	100	90	65		
			Total non-food-crops ...	14,100	14,100	14,100	75	60		
			GRAND TOTAL ...	52,800	55,800	52,900	82	70		

Jalpaiguri ...	1,894,000	925,000	Barley	1,800	1,000	1,200	45	75	The normal area under other *rabi* non-food-crops has been revised. The decrease in the outturn is due to the crops having been injured by the frost in the beginning of February last.
			Other *rabi* cereals and pulses	10,700	10,000	10,000	64	67	
			Other *rabi* food-crops (not separately reported), *e.g.*, potatoes, yams, melons, and others ...	15,800	12,800	15,000	62	61	
			Total food-crops ...	28,300	23,800	26,200	62	64	
			Tobacco	95,800	118,800	118,700	56	51	
			Other *rabi* non-food-crops (not separately reported), *e.g.*, spices, oats, &c.	24,100	18,200	19,900	57	60	
			Total non-food-crops ...	119,900	136,800	138,600	50	53	
			GRAND TOTAL ...	148,200	160,600	164,800	51	54	
Darjeeling ...	744,900	160,600	Barley	2,800	2,000	2,000	125	53	
			Other *rabi* cereals and pulses	7,000	7,000	7,000	116	89	
			Other *rabi* food-crops (not separately reported), *e.g.*, potatoes, yams, melons and others ...	8,700	8,000	8,000	116	103	
			Total food-crops ...	18,200	17,000	17,000	117	94	
			Tobacco	600	600	600	83	80	
			Total non-food-crops ...	600	600	600	83	80	
			GRAND TOTAL ...	18,800	17,600	17,600	116	93	

1	2	3	4	5	6	7	8	9	10	11
DIVISION AND DISTRICT.	Total area of district in acres.	Total area in district estimated to be under cultivation in acres.	Names of *rabi* crops.	Approximate normal area under each specified *rabi* crop in acres.	Approximate area last year under each specified *rabi* crop in acres (1903-1904).	Estimated area this year under each specified *rabi* crop in acres (1904-1905).	Taking 100 to represent the normal outturn, how much represented the outturn last year (1903-1904)?	Taking 100 to represent the normal outturn, how much will represent this year's outturn (1904-1905)?	Remarks by District Officers.	Remarks by the Department of Land Records and Agriculture, Bengal.
Rajshahi Division—*concld.*										
Rangpur ...	2,235,520	1,224,900	Barley	500	500	500	100	50	The outturn is expected to be below normal on account of frost in the beginning of February last.	
			Gram	200	200	200	100	50		
			Other *rabi* cereals and pulses	92,900	62,000	62,000	100	66		
			Other *rabi* food-crops (not separately reported), *e.g.*, potatoes, yams melons, and others ...	11,900	11,900	12,000	100	74		
			Total food-crops ...	105,500	74,600	74,700	100	67		
			Tobacco	194,100	171,100	171,100	100	61		
			Other *rabi* non-food-crops (not separately reported), *e.g.*, spices, oats, &c.	22,700	22,700	22,700	100	80		
			Total non-food-crops ..	216,800	193,800	193,800	100	63		
			GRAND TOTAL ...	322,300	268,400	268,500	100	64		

Bogra	869,700	622,800	Gram	5,000	4,500	4,250	75	60	Insufficient rainfall and damage to crops by frost during the second week of February account for the low outturn.
			Other rabi cereals and pulses	42,000	22,000	20,000	55	60	
			Other rabi food-crops (not separately reported), *e.g.*, potatoes, yams, melons, and others	12,000	10,000	10,000	85	80	
			Total food-crops ...	59,000	36,500	34,250	64	60	
			Tobacco	1,000	1,000	1,000	90	80	
			Other rabi non-food-crops (not separately reported), *e.g.*, spices, oils, &c.	100	100	100	90	80	
			Total non-food-crops ...	1,100	1,100	1,100	90	80	
			GRAND TOTAL ...	60,100	37,600	35,400	64	60	
Pabna	1,176,900	895,200	Barley	16,000	15,000	15,000	100	100	The unusual cold was unfavourable to the *khesari* and *matar*.
			Bere or summer rice ...	7,200	7,000	6,800	100	100	
			Gram	16,000	15,000	14,500	100	100	
			Other rabi cereals and pulses	120,000	91,000	90,000	100	75	
			Other rabi food-crops (not separately reported), *e.g.*, potatoes, yams, melons, and others	2,000	2,000	2,000	100	100	
			Total food-crops ...	161,200	130,000	128,300	100	81	
			Tobacco	7,000	6,500	6,000	100	100	The area under *mesta* hemp has increased this year.
			Other rabi non-food-crops (not separately reported), *e.g.*, spices, oils, &c.	18,000	15,000	20,000	100	110	
			Total non-food-crops ...	22,000	21,500	26,000	100	108	
			GRAND TOTAL ...	183,200	151,700	154,300	100	86	

1	2	3	4	5	6	7	8	9	10	11
Division and District.	Total area of district in acres.	Total area in district estimated to be under cultivation in acres.	Names of *rabi* crops.	Approximate normal area under each specified *rabi* crop in acres.	Approximate area last year under each specified *rabi* crop in acres (1903-1904).	Estimated area this year under each specified *rabi* crop in acres (1904-1905).	Taking 100 to represent the normal outturn, how much represented the outturn last year (1903-1904)?	Taking 100 to represent the normal outturn, how much will represent this year's outturn (1904-1905)?	Remarks by District Officers.	Remarks by the Department of Land Records and Agriculture, Bengal.
Dacca Division.										
Dacca ...	1,769,400	1,213,800	Barley	2,200	2,100	2,100	74	74	The cold which prevailed in the beginning of February accounts for the short outturn.	
			Boro or summer rice ...	49,500	39,200	48,900	86	84		
			Gram	1,000	1,000	1,000	90	90		
			Other *rabi* cereals and pulses	96,200	98,600	99,300	72	70		
			Other *rabi* food-crops (not separately reported), *e.g.*, potatoes, yams, melons, and others	7,000	6,000	5,800	85	75		
			Total food-crops ...	156,100	136,900	152,100	76	74		
			Tobacco	9,500	9,500	9,500	87	87		
			Other *rabi* non-food-crops (not separately reported), *e.g.*, spices, oats, &c.	14,000	9,900	9,900	80	76		
			Total non-food-crops ...	23,500	19,400	19,400	83	81		
			GRAND TOTAL ...	179,600	156,300	171,500	77	75		

Mymensingh	4,098,400	2,486,000	*Boro* or summer rice ...	107,800	124,000	107,800	84	100	The normal area has been revised. In Jamalpur and Tangail subdivision all the crops, except *boro* rice, have suffered from heavy frost and severe cold. Hence the outturn is below the normal.
			Gram	1,000	1,000	1,000	100	80	
			Other *rabi* cereals and pulses	245,300	243,100	245,300	98	80	
			Other *rabi* food-crops (not separately reported), *e.g.*, potatoes, yams, melons, and others ...	53,100	53,000	53,100	100	78	
			Total food-crops ...	407,200	421,100	407,200	94	85	
			Tobacco	44,700	44,600	44,700	100	50	
			Other *rabi* non-food-crops (not separately reported), *e.g.*, spices, oats, &c.	27,900	26,200	27,900	100	75	
			Total non-food-crops ...	72,600	70,800	72,600	100	60	
			GRAND TOTAL ...	479,800	491,900	479,800	95	81	
Faridpur ...	1,459,840	1,182,600	Barley	6,000	6,000	6,000	90	75	The short outturn is due to occasional rains during January and February 1905.
			Boro or summer rice ...	18,000	10,000	10,000	90	75	
			Gram	8,000	8,000	8,000	90	75	
			Other *rabi* cereals and pulses	152,000	130,000	130,000	90	75	
			Other *rabi* food-crops (not separately reported), *e.g.*, potatoes, yams, melons, and others	500	500	500	90	75	
			Total food-crops ...	183,500	154,500	154,500	90	75	
			Tobacco	500	500	500	90	75	
			Other *rabi* non-food-crops (not separately reported), *e.g.*, spices, oats, &c.	3,000	3,000	3,000	90	75	
			Total non-food-crops ...	3,500	3,500	3,500	90	75	
			GRAND TOTAL ...	187,000	158,000	158,000	90	75	

1	2	3	4	5	6	7	8	9	10	11
Division and District.	Total area of district in acres.	Total area in district estimated to be under cultivation in acres.	Names of *rabi* crops.	Approximate normal area under each specified *rabi* crop in acres.	Approximate area last year under each specified *rabi* crop in acres (1903-1904).	Estimated area this year under each specified *rabi* crop in acres (1904-1905).	Taking 100 to represent the normal outturn, how much represented the outturn last year (1903-1904)?	Taking 100 to represent the normal outturn, how much will represent this year's outturn (1904-1905)?	Remarks by District Officers.	Remarks by the Department of Land Records and Agriculture, Bengal.
Dacca Division—*concld.*										
Backergunge	2,135,360	1,416,000	*Boro* or summer rice ...	25,000	26,000	26,000	100	100		
			Other *rabi* cereals and pulses	50,000	50,000	50,000	100	80	The decrease in the outturn is due to excessive rainfall after sowing.	
			Other *rabi* food-crops (not separately reported), *e.g.*, potatoes, yams, melons, and others	40,000	40,000	40,000	100	100		
			Total food-crops ...	115,000	116,000	116,000	100	91		
			Tobacco	1,000	1,000	1,000	100	100		
			Other *rabi* non-food-crops (not separately reported), *e.g.*, sarum, oats, &c.	11,000	11,000	11,000	100	100		
			Total non-food-crops ...	12,000	12,000	12,000	100	100		
			Grand Total ...	127,000	128,000	128,000	100	92		
Chittagong Division.										
Tippera ...	1,56 1,360	1,209,000	*Boro* or summer rice ...	13,300	12,300	12,300	92	98		
			Gram	3,300	1,200	1,200	50	50	The outturn is low on account of excessive rainfall during the sowing season.	
			Other *rabi* cereals and pulses	26,100	23,400	23,100	96	78		
			Other *rabi* food-crops (not separately reported), *e.g.*, potatoes, yams, melons, and others	2,400	2,200	2,200	92	80		
			Total food-crops ...	45,100	39,100	37,800	95	84		

			Tobacco	3,800	2,900	2,900	87	85	
			Other *rabi* non-food-crops (not separately reported), *e.g.*, spices, oats, &c.	22,000	21,100	21,100	98	98	
			Total non-food-crops ...	25,600	24,000	24,000	97	96	
			GRAND TOTAL ...	70,100	63,100	61,300	96	89	
Noakhali ...	1,052,160	704,850	Other *rabi* cereals and pulses.	67,100	74,000	75,500	87	80	
			Other *rabi* food-crops (not separately reported), *e.g.*, potatoes, yams, melons, and others.	4,000	.....	4,000*	.....	70	* Recent enquiries show that these crops are now sown to an appreciable extent. The decrease in the estimated outturn is due to unusual rainfall both at the time of sowing and maturity of the crops.
			Total food-crops ...	71,100	74,000	79,500	87	79	
			Other *rabi* non-food-crops (not separately reported), *e.g.*, spices, oats, &c.	15,000	.....	15,000*	.....	70	
			Total non-food-crops ...	15,000	.....	15,000	.....	70	
			GRAND TOTAL ...	86,100	74,000	94,500	87	78	
Chittagong ...	1,594,880	559,300	Other *rabi* cereals and pulses.	5,600	5,500	5,500	80	80	
			Other *rabi* food-crops (not separately reported), *e.g.*, potatoes, yams, melons, and others.	12,000	10,100	10,100	80	80	
			Total food-crops ...	17,600	15,600	15,600	80	80	
			Tobacco	3,300	2,300	2,300	80	80	
			Other *rabi* non-food-crops (not separately reported), *e.g.*, spices, oats, &c.	17,200	16,900	16,900	80	80	
			Total non-food-crops ...	20,500	19,200	19,200	80	80	
			GRAND TOTAL ...	38,100	34,800	34,800	80	80	

1	5	6	7	8	9	10	11
Division and District.	Total area of district in acres.	Total area in district estimated to be under cultivation in acres.	Names of rabi crops.	Approximate normal area under each specified rabi crop in acres.	Approximate area last year under each specified rabi crop in acres (1903-1904).	Estimated area this year under each specified rabi crop in acres (1904-1905).	Taking 100 to represent the normal outturn, how much is represented by this year's outturn (1904-1905)?	Taking 100 to represent the normal outturn, how much was represented by the outturn last year (1903-1904)?	Taking 100 to represent the normal outturn, how much will represent this year's outturn (1904-1905)?	Remarks by District Officers.	Remarks by the Department of Land Records and Agriculture, Bengal.
Patna Division.											
Patna	1,339,000	1,062,100	Barley	75,000	81,000	74,000	75	100	75	Rainy and cloudy weather accompanied with frost affected the crops, hence the decrease in the outturn.	
			Juar or summer rice	1,300	800	800	100	100	100		
			Gram	85,100	89,100	85,100	75	100	75		
			Other rabi cereals and pulses.	85,600	87,200	85,600	94	100	94		
			Other rabi food-crops (not separately reported, e.g., potatoes, yams, melons, and others.	14,100	14,100	14,000	100	100	100		
			Total food-crops	265,100	286,400	267,500	76	99	76		
			Tobacco	5,000	5,000	5,200	100	100	100		
			Opium (poppy)	16,300	14,100	14,000	86	100	86		
			Other rabi non-food-crops (not separately reported, e.g., oil, spices, cane, &c.	7,000	8,000	7,300	100	100	100		
			Total non-food-crops	28,000	27,100	26,500	94	100	94		
			GRAND TOTAL	291,100	313,500	294,000	77	99	77		
Gaya	2,307,000		Barley	78,000	81,000	73,000	94	100	94	The outturn of rabi crops is estimated below the normal owing to damage done by frost and rainfall in February 1905.	
			Juar	94,000	104,000	102,100	100	100	100		
			Other rabi cereals and pulses.	170,000	201,000	172,000	94	100	94		

			Other *rabi* food-crops (not separately reported), *e.g.*, potatoes, yams, melons, and others.	10,000	16,400	9,900	100	80	
			Total food-crops ...	351,000	435,700	357,700	100	74	
			Opium (poppy)	51,000	48,500	51,000	100	80	
			Other *rabi* non-food-crops (not separately reported), *e.g.*, spices, oats, &c.	2,000	2,500	2,000	100	100	
			Total non-food-crops ...	53,000	51,000	53,000	100	81	
			GRAND TOTAL ...	404,000	486,700	410,700	100	73	
Shahabad ...	2,796,720	1,841,800	Barley	52,000	52,000	52,000	94	74	The decrease in the outturn is due to damage done by frost in February 1905.
			Boro or summer rice ...	6,500	5,000	6,500	95	68	
			Gram	67,300	68,400	66,900	90	68	
			Other *rabi* cereals and pulses.	84,500	88,300	84,400	90	64	
			Other *rabi* food-crops (not separately reported), *e.g.*, potatoes, yams, melons, and others.	28,700	21,700	19,700	91	83	
			Total food-crops ...	239,000	232,400	229,500	91	69	
			Tobacco	500	400	400	75	55	
			Opium (poppy)	18,500	15,800	15,500	95	87	
			Other *rabi* non-food-crops (not separately reported), *e.g.*, spices, oats, &c.	15,500	24,400	23,200	84	72	
			Total non-food-crops ...	34,500	40,600	39,400	88	78	
			GRAND TOTAL ..	273,500	273,000	268,900	91	70	

1	2	3	4	5	6	7	8	9	10	11
Division and District.	Total area of district in acres.	Total area in district estimated to be under cultivation in acres.	Names of *rabi* crops.	Approximate normal area under each specified *rabi* crop in acres.	Approximate area last year under each specified *rabi* crop in acres (1903-1904).	Estimated area this year under each specified *rabi* crop in acres (1905-1905).	Taking 100 to represent the normal outturn, how much represented the outturn last year (1903-1904)?	Taking 100 to represent the normal outturn, how much will represent this year's outturn (1904-1905)?	Remarks by District Officers.	Remarks by the Department of Land Records and Agriculture, Bengal.
Patna Division—*contd.*										
Saran ...	1,710,465	1,357,200	Barley	260,800	260,800	270,000	95	80	Prospects were most promising until the frosts in January and February damaged the crops.	
			Boro or summer rice ...	600	600	630	85	75		
			Gram	58,800	49,800	61,000	80	70		
			Other *rabi* cereals and pulses.	366,400	354,000	350,000	98	50		
			Other *rabi* food-crops (not separately reported), *e.g.*, potatoes, yams, melons, and others.	37,600	37,600	38,600	92	75		
			Total food-crops ...	724,200	702,900	719,600	95	64		
			Tobacco	500	600	600	90	75		
			Opium (poppy)	39,800	39,800	35,200	95	95		
			Other *rabi* non-food-crops (not separately reported), *e.g.*, spices, oats, &c.	7,000	7,000	7,800	90	80		
			Total non-food-crops ...	47,900	48,000	43,700	94	92		
			GRAND TOTAL ...	772,100	750,000	763,200	95	66		
Champaran ...	2,359,840	1,447,600	Barley	214,100	210,100	215,100	75	100	Low outturn is due to frost and hailstorm.	
			Gram	37,300	35,200	36,200	75	75		
			Other *rabi* cereals and pulses.	214,000	211,000	210,000	95	45		

			Other *rabi* food-crops (not separately reported), *e.g.*, potatoes, yams, melons, and others.	36,600	35,500	36,300	10	50	
			Total food-crops ...	501,300	491,800	504,100	85	71	
			Tobacco	2,500	1,700	2,500	70	75	
			Opium (poppy)	53,600	49,800	46,900	75	75	
			Other *rabi* non-food-crops (not separately reported), *e.g.*, spices, oats, &c.	17,800	16,300	15,300	80	90	
			Total non-food-crops ...	73,900	67,800	67,700	76	79	
			GRAND TOTAL ...	575,200	559,600	571,800	84	72	
Muzaffarpur ...	1,941,254	1,627,000	Barley	296,600	296,600	296,600	70	81	The frost of February did considerable damage to the tobacco crop. The weather being cloudy and wet, opium has suffered to a considerable extent.
			Gram	43,800	43,800	43,800	85	69	
			Other *rabi* cereals and pulses.	385,800	385,800	385,800	80	62	
			Other *rabi* food-crops (not separately reported), *e.g.*, potatoes, yams, melons, and others.	77,800	77,800	77,800	95	90	
			Total food-crops ...	804,000	804,000	804,000	78	72	
			Tobacco	17,400	17,400	17,400	75	50	
			Opium (poppy)	13,000	12,400	13,000	50	75	
			Other *rabi* non-food-crops (not separately reported), *e.g.*, spices, oats, &c.	51,900	51,900	51,900	70	76	
			Total non-food-crops ...	82,300	81,700	82,300	68	70	
			GRAND TOTAL ...	886,300	885,700	886,300	77	72	

1	2	3	4	5	6	7	8	9	10	11
DIVISION AND DISTRICT.	Total area of district in acres.	Total area in district estimated to be under cultivation in acres.	Names of *rabi* crops.	Approximate normal area under each specified *rabi* crop in acres.	Approximate area last year under each specified *rabi* crop in acres (1903-1904).	Estimated area this year under each specified *rabi* crop in acres (1904-1905).	Taking 100 to represent the normal outturn, how much represented the outturn last year (1903-1904)?	Taking 100 to represent the normal outturn, how much will represent this year's outturn (1904-1905)?	Remarks by District Officers.	Remarks by Department of Land Records and Agriculture, Bengal.
Patna Division—*concld.* Darbhanga ...	2,130,000	1,678,000	Barley	172,200	104,200	118,900	85	79		
			Boro or summer rice ...	300	.....	.....	.....	.....		
			Gram	56,000	53,400	53,300	82	71		
			Other *rabi* cereals and pulses.	313,900	276,700	236,100	79	68		
			Other *rabi* food-crops (not separately reported), *e.g.*, potatoes, yams, melons, and others.	37,000	37,700	65,300	72	64		
			Total food-crops ...	580,400	472,000	473,600	80	71		
			Tobacco	58,000	50,500	38,000	74	71		
			Opium (poppy)	4,400	3,400	2,300	61	70		
			Other *rabi* non-food-crops (not separately reported), *e.g.*, spices, oats, &c.	82,700	48,100	65,100	80	74		
			Total non-food-crops ...	113,300	82,000	106,000	77	73		
			GRAND TOTAL ...	673,100	554,000	579,600	80	72		

Bhagalpur Division.									
Monghyr ...	2,[illegible],460	1,[illegible],800	Barley	120,000	90,000	120,000	90	90	The *rabi* crops have been damaged to a great extent by hail, and frost and late rain.
			Boro or summer rice ...	2,500	2,700	2,600	105	100	
			Gram	135,000	200,000	150,000	98	75	
			Other *rabi* cereals and pulses.	300,000	300,000	300,000	90	80	
			Other *rabi* food-crops (not separately reported), *e.g.*, potatoes, yams, melons, and others.	55,000	55,000	55,000	83	90	
			Total food-crops ...	615,700	647,700	627,800	95	82	
			Tobacco	10,400	11,700	12,200	100	70	
			Opium (poppy) ...	19,000	18,100	19,000	97	70	
			Other *rabi* non-food-crops (not separately reported), *e.g.*, spices, oats, &c.	12,000	13,000	13,000	103	80	
			Total non-food-crops ...	51,900	42,800	44,200	99	73	
			GRAND TOTAL ...	666,700	690,800	672,000	95	81	
Bhagalpur ...	2,704,640	2,697,000	Barley	68,900	109,000	63,900	89	89	Frost, cold and rain in February did some damage to the crops.
			Gram	73,700	121,100	73,700	99	90	
			Other *rabi* cereals and pulses.	169,600	187,800	157,800	84	85	
			Other *rabi* food-crops (not separately reported), *e.g.*, potatoes, yams, melons, and others.	66,700	86,700	66,700	105	100	
			Total food-crops ...	369,900	504,600	362,100	93	89	
			Tobacco	8,000	8,000	8,000	93	88	
			Opium (poppy)	900	900	900	100	100	
			Other *rabi* non-food-crops (not separately reported), *e.g.*, spices, oats, &c.	44,600	44,600	44,600	97	98	
			Total non-food-crops ...	53,500	53,500	53,500	96	96	
			GRAND TOTAL ...	423,400	558,100	415,600	92	90	

1	2	3	4	5	6	7	8	9	10	11
Division and District.	Total area of district in acres.	Total area in district estimated to be under cultivation in acres.	Names of *rabi* crops.	Approximate normal area under each specified crop in acres.	Approximate area last year under each specified crop in acres (1903-1904).	Estimated area this year under each specified *rabi* crop in acres (1904-1905).	Taking 100 to represent the normal outturn, how much represented the outturn last year (1903-1904)?	Taking 100 to represent the normal outturn, how much will represent this year's outturn (1904-1905)?	Remarks by District Officers.	Remarks by the Department of Land Records and Agriculture, Bengal.
Bhagalpur Divn.—*concld.*										
Purnea ...	3,196,615	1,774,400	Barley	8,200	8,200	8,200	84	79	The normal area has been revised.	
			Boro or summer rice ...	500	500	500	80	80		
			Gram	27,100	23,100	23,100	80	81	The recent frost and rain have considerably damaged the tobacco and pulses.	
			Other *rabi* cereals and pulses.	160,000	150,000	140,000	85	82		
			Other *rabi* food-crops (not separately reported), *e.g.*, potatoes, yams, melons, and others.	26,700	26,700	26,700	92	87		
			Total food-crops ...	222,500	208,500	198,500	85	82		
			Tobacco	31,100	31,100	31,100	82	57		
			Other *rabi* non-food-crops (not separately reported), *e.g.*, spices, oats, &c.	7,300	7,300	7,300	84	70		
			Total non-food-crops ...	38,400	38,400	38,400	82	67		
			Grand Total ...	260,900	246,900	236,900	84	78		
Malda ...	1,216,000	716,500	Barley	29,500	22,000	22,000	100	70	The decrease in the outturn is due to want of sufficient rain at the proper time and also to the damage recently caused by frost.	
			Boro or summer rice ...	5,000	5,000	5,000	100	90		
			Gram	7,500	7,500	7,000	100	80		
			Other *rabi* cereals and pulses.	95,500	73,000	83,000	100	75		

			Other *rabi* food-crops (not separately reported), *e.g.*, potatoes, yams, melons, and others.	1,800	1,400	1,100	100	80	
			Total food-crops ...	139,000	107,200	118,400	100	75	
			Tobacco	10,500	8,600	8,000	100	76	
			Other *rabi* non-food-crops (not separately reported), *e.g.*, spices, oats, &c.	8,000	8,300	8,000	100	60	
			Total non-food-crops ...	18,500	16,900	16,000	100	67	
			GRAND TOTAL ...	157,500	124,100	134,400	100	74	
Sonthal Parganas.	3,500,100	1,546,300	Barley	28,100	28,100	23,000	100	80	The late rains and cold have injured some of the *rabi* crops.
			Boro or summer rice ...	1,500	1,000	900	90	54	
			Gram	41,000	36,800	40,600	97	60	
			Other *rabi* cereals and pulses.	129,200	127,800	127,900	105	75	
			Other *rabi* food-crops (not separately reported), *e.g.*, potatoes, yams, melons, and others.	2,000	1,700	1,900	100	50	
			Total food-crops ...	201,800	193,400	194,200	103	77	
			Tobacco	1,300	1,200	1,200	102	53	
			Total non-food-crops ...	1,300	1,200	1,200	102	53	
			GRAND TOTAL ...	203,100	194,600	195,400	103	77	

1	2	3	4	5	6	7	8	9	10	11
Division and District.	Total area of district in acres.	Total area in district estimated to be under cultivation in acres.	Names of *rabi* crops.	Approximate normal area under each specified *rabi* crop in acres.	Approximate area last year under each specified *rabi* crop in acres (1903-1904).	Estimated area this year under each specified *rabi* crop in acres (1904-1905).	Taking 100 to represent the normal outturn, how much is represented the outturn last year (1903-1904)?	Taking 100 to represent the normal outturn, how much will represent this year's outturn (1904-1905)?	Remarks by District Officers.	Remarks by the Department of Land Records and Agriculture, Bengal.
Orissa Division.										
Cuttack ...	3,922,560	1,161,200	Barley	1,000	900	900	75	86	The outturn is below the normal on account of untimely rainfall of the year.	
			Kuro or summer rice ...	47,000	30,000	28,000	96	130		
			Other *rabi* cereals and pulses.	100,000	95,000	92,000	92	83		
			Other *rabi* food-crops (not separately reported), *e.g.*, potatoes, yams, melons, and others.	3,500	4,300	2,500	91	85		
			Total food-crops ...	151,500	125,200	122,900	71	88		
			Tobacco	7,500	4,000	4,200	95	93		
			Other *rabi* non-food-crops (not separately reported), *e.g.*, spices, oils, &c.	23,000	7,000	20,000	92	97		
			Total non-food-crops ...	30,500	11,000	24,200	93	96		
			GRAND TOTAL ...	182,000	147,200	146,800	78	89		
Balasore ...	1,884,928	570,600	*Kuro* or summer rice ...	1,500	1,000	1,200	67	100	The decrease in the area sown this year is due to want of seasonable rains.	
			Other *rabi* cereals and pulses.	25,000	9,000	9,200	85	100		
			Other *rabi* food-crops (not separately reported), *e.g.*, potatoes, yams, melons, and others.	5,500	5,000	5,000	95	100		
			Total food-crops ...	32,000	15,000	15,400	85	100		

			Tobacco	140	300	100	100	100	
			Other *rabi* non-food-crops (not separately reported), e.g., spices, oats, &c.	1,380	4,000	3,500	100	100	
			Total non-food-crops ...	1,380	4,300	3,600	100	100	
			GRAND TOTAL ...	20,880	19,300	19,900	89	100	
Angul ...	1,075,840	280,000	Gram	100	300	300	50	80	Low outturn is due to want of rain in November and December.
			Other *rabi* cereals and pulses	47,900	38,500	38,500	60	75	
			Other *rabi* food-crops (not separately reported), e.g., potatoes, yams, melons, and others.	500	500	500	90	75	
			Total food-crops ...	48,500	39,300	39,300	90	75	
			Tobacco	1,000	1,000	1,000	90	80	
			Other *rabi* non-food-crops (not separately reported), e.g., spices, oats, &c.	9,500	9,500	9,500	95	100	
			Total non-food-crops ...	10,500	10,500	10,500	94	98	
			GRAND TOTAL ...	59,000	49,700	49,700	91	80	
Puri ...	1,609,300	750,300	*Boro* or summer rice ...	6,500	10,000	10,000	85	65	The short outturn is attributed to want of rain at the time of sowing and the excessive rain at the time of germinating and flowering.
			Gram	5,500	3,800	3,100	75	56	
			Other *rabi* cereals and pulses.	60,000	75,000	75,800	88	65	
			Other *rabi* food-crops (not separately reported), e.g., potatoes, yams, melons and others.	1,000	1,000	1,300	90	98	
			Total food-crops ...	73,000	88,800	90,200	87	65	
			Tobacco	4,000	100	100	75	65	
			Other *rabi* non-food-crops (not separately reported), e.g., spices, oats, &c.	700	100	100	88	90	
			Total non-food-crops ...	4,700	200	200	81	77	
			GRAND TOTAL ...	77,700	88,700	90,400	87	65	

1	2	3	4	5	6	7	8	9	10	11
Division and District.	Total area of district in acres.	Total area in district estimated to be under cultivation in acres.	Names of *rabi* crops.	Approximate normal area under each specified *rabi* crop in acres.	Approximate area last year under each specified *rabi* crop in acres (1903-1904).	Estimated area this year under each specified *rabi* crop in acres (1904-1905).	Taking 100 to represent the normal outturn, how much represented the outturn last year (1903-1904)?	Taking 100 to represent the normal outturn, how much will represent this year's outturn (1904-1905)?	Remarks by District Officers.	Remarks by the Department of Land Records and Agriculture, Bengal.
Chota Nagpur Divn.										
Hazaribagh ...	4,[illegible],440	1,[illegible]	Barley	14,400	14,400	13,600	87	74	For want of moisture in the soil the whole normal areas could not be sown.	
			Gram	23,[illegible]	23,[illegible]	22,[illegible]	87	75		
			Other *rabi* cereals and pulses.	35,700	35,700	29,800	87	67		
			Other *rabi* food-crops (not separately reported), *e.g.*, potatoes, yams, melons, and others.	3,000	3,000	3,000	80	68		
			Total food-crops ...	77,000	77,[illegible]	69,[illegible]	87	71		
			Tobacco	600	600	600	100	83		
			Opium (poppy)	9,000	9,000	9,000	100	94		
			Other *rabi* non-food crops (not separately reported), *e.g.*, spices, oats, &c.	12,000	12,000	12,000	100	79		
			Total non-food-crops ...	21,600	21,600	21,600	100	85		
			Grand Total ...	98,600	98,600	90,[illegible]	90	74		
Ranchi ...	4,[illegible]	1,[illegible]	Barley	300	300	300	70	50	The low outturn is due to want of moisture at the sowing time and partly to frost and rain.	
			Bore or summer rice ...	600	600	600	70	73		
			Gram	[illegible]	1,000	400	70	60		
			Other *rabi* cereals and pulses.	10,400	10,000	10,000	70	60		

			Other *rabi* food-crops (not separately reported), *e.g.*, potatoes, yams, melons, and others.	1,500	1,000	1,000	70	90	
			Total food-crops ...	14,100	12,900	12,500	70	63	
			Tobacco	300	300	300	70	60	
			Other *rabi* non-food-crops (not separately reported), *e.g.*, spices, oats, &c.	300	300	300	70	60	
			Total non-food-crops ...	600	600	600	70	60	
			GRAND TOTAL ...	14,700	13,500	13,100	70	63	
Palamau ...	2,139,200	627,600	Barley	28,000	28,000	30,000	60	60	The October rainfall was favourable for large sowings.
			Boro or summer rice ...	500	100	200	50	50	
			Gram	65,000	20,000	40,000	62	50	
			Other *rabi* cereals and pulses	90,000	92,500	90,000	62	50	
			Other *rabi* food-crops (not separately reported), *e.g.*, potatoes, yams, melons, and others	1,000	1,000	1,000	85	65	
			Total food-crops ...	184,500	141,100	161,200	62	52	
			Opium (poppy)	700	400	400	70	60	
			Other *rabi* non-food-crops (not separately reported), *e.g.*, spices, oats, &c.	6,000	5,000	1,000	70	50	
			Total non-food-crops ...	6,700	5,400	1,400	70	53	
			GRAND TOTAL ...	191,200	146,500	162,600	62	52	

1	2	3	4	5	6	7	8	9	10	11
Division and District.	Total area of district in acres.	Total area in district estimated to be under cultivation in acres.	Names of *rabi* crops.	Approximate normal area under each specified *rabi* crop in acres.	Approximate area last year under each specified *rabi* crop in acres (1903-1904).	Estimated area this year under each specified *rabi* crop in acres (1904-1905).	Taking 100 to represent the normal outturn, how much represented the outturn last year (1903-1904)?	Taking 100 to represent the normal outturn, how much will represent this year's outturn (1904-1905)?	Remarks by District Officers.	Remarks by the Department of Land Records and Agriculture, Bengal.
Chota Nagpur Divn.—*contd.*										
Manbhum ...	2,654,080	1,619,200	Barley	3,200	3,700	2,400	90	70	The low outturn and decrease in the area sown are due to untimely heavy rain as well as to want of timely rain.	
			Boro or summer rice ...	100	100	.....	100	.....		
			Gram	2,000	2,000	1,500	75	75		
			Other *rabi* cereals and pulses	55,000	53,500	32,500	93	60		
			Other *rabi* food-crops (not separately reported), e.g., potatoes, yams, melons, and others ...	300	300	300	95	100		
			Total food-crops ...	61,100	58,600	36,600	92	79		
			Tobacco	4,000	3,200	2,700	82	70		
			Other *rabi* non-food-crops (not separately reported) e.g., rape, oats, &c. ...	3,500	2,900	3,500	75	95		
			Total non-food-crops ...	7,500	6,700	6,200	89	84		
			Grand Total ...	68,600	65,300	42,800	91	80		
Singhbhum ...	2,494,080	540,700	Barley	800	900	800	93	70	Owing to want of moisture less area was sown. There have been heavy rains in the winter and the crops damaged, hence, the low outturn is estimated.	
			Boro or summer rice ...	200	200	200	100	80		
			Gram	8,000	7,000	6,500	99	60		
			Other *rabi* cereals and pulses	120,000	101,000	105,000	82	60		

Other rabi food-crops (not separately reported), e.g., potatoes, yams, melons, and others.		130,600	114,600	112,700	98	83	60				
Total food-crops ...		130,600	114,600	112,700	98	83	60				
Tobacco		800	800	700	98	83	74				
Other rabi non-food-crops (not separately reported), e.g., spices, oils, &c.		800	800	700	98	83	74				
Total non-food-crops ...		800	800	700	98	83	74				
GRAND TOTAL ...		130,600	114,600	113,700	98	83	60				
Barley		1,277,700	1,214,100	1,214,700	95	83	63				
Rice or summer rice ...		640,000	618,900	650,300	101	91	83				
Gram		1,154,900	1,205,400	1,041,300	86	71	70				
Other rabi cereals and pulses.		4,446,000	4,446,000	4,399,100	97	79	80				
Other rabi food-crops (not separately reported), e.g., potatoes, yams, melons, and others.		741,300	726,900	744,100	98	83	60				
Total food-crops ...		8,339,100	8,312,300	8,049,500	97	75	61				
Tobacco		841,300	837,600	846,500	82	61	61				
Opium (poppy)		234,300	213,300	235,400	79	61	100				
Other rabi non-food-crops (not separately reported), e.g., spices, oils, &c.		1,100	900	900	100	61	82				
		664,700	640,400	573,700	87	61	62				
Total non-food-crops ...		1,841,300	1,291,600	1,344,500	86	73	73				
GRAND TOTAL ...	87,888,800	10,040,400	9,603,900	9,408,100	90*	75	75				

The figures in columns 5 and 6 under rabi food and non-food-crops have been revised.

* An estimate by the Department.

Bengal ..

APPENDIX II.

Abstract Statement of Estimated Acreage and Outturn of the Summer Rice Crop, 1904-1905.

Province.	Acreage							Outturn in Cwt.						
	Of current year's crop.	Of previous year's crop.	Average of five preceding years (viz., 1898-99 to 1902-1903).	Average of ten preceding years (viz., 1893-94 to 1902-1903).	Percentage by which column 2 exceeds (+) or falls short of (−) area in—			Estimated yield of current year, i.e., of area in column 2.	Yield of previous year, i.e., of area in column 3.	Average of five preceding years (viz., 1898-99 to 1902-1903).	Average of ten preceding years (viz., 1893-94 to 1902-1903).	Percentage by which column 9 exceeds (+) or falls short of (−) outturn in—		
					Column 3.	Column 4.	Column 5.					Column 10.	Column 11.	Column 12.
1	2	3	4	5	6	7	8	9	10	11	12	13	14	15
Bengal	[illegible]	[illegible]	[illegible]	[illegible]	+0·36	−10·99	−15·58	2,873,100	2,923,[illegible]	3,2[illegible],000	3,[illegible],100	−1·73	−11·94	−6·96

DECENTRALIZATION OF MUNICIPAL WORK IN CALCUTTA.

THE following papers are published for general information.

E. A. GAIT,
Offg. Secy. to the Govt. of Bengal.

DARJEELING,
The 17th April 1905.

MUNICIPAL DEPARTMENT.

RESOLUTION—No. 1686M.

Dated the 30th March 1905.

THE attention of the Lieutenant-Governor has for some time been directed to the steps which are being taken by the Calcutta Corporation for the decentralization of the Municipal work by the division of Calcutta into districts. Four districts have been created, each equipped with a complete establishment for the working of (1) a Health Department under a District Health Officer, (2) a Building Department under a Building Surveyor and (3) an amalgamated Engineering and Conservancy Department under a District Engineer. The establishment necessary for the working of the scheme has been appointed, and the material equipment also has now been practically all supplied. The practice of holding meetings of ward Commissioners in these District offices has also been introduced with good results, and useful schemes have been discussed in the meetings, the wants of the rate-payers being thus brought directly to the notice of the executive staff.

2. The development has now reached a stage at which legislation is necessary if any further considerable advance is to be made. It is desirable moreover that the whole question should be carefully considered from all points of view, so that the course of development within Calcutta itself may not merely be accelerated but may be so controlled and directed that it may ultimately, if not immediately, fit in with a larger and more comprehensive scheme for the Municipal administration of the larger urban area comprising Calcutta, Howrah and the surrounding Suburban Municipalities.

3. The Lieutenant-Governor has accordingly been pleased to appoint the following Committee to work out the details of a scheme of decentralisation affecting the existing divisions of the Municipality, such as they may propose to carry out at once, and also to lay down principles for the framing of a scheme to include outside Municipalities in the future as occasion may arise:—

THE HON'BLE MR. R. T. GREER, C.S.I., I.C.S., Chairman of the Calcutta Corporation ...	*President.*
THE HON'BLE DR. JUSTICE ASUTOSH MUKERJEE, M.A., B.L., F.R.A.S., F.R.S.E.,	*Members.*
MR. F. W. DUKE, I.C.S., Commissioner of the Presidency Division,	
MR. C. G. H. ALLEN, I.C.S.,	
THE HON'BLE BABU BHUPENDRA NATH BOSE,	
THE HON'BLE BABU NALIN BEHARI SARKAR, C.I.E.,	
MR. J. R. BERTRAM.	

It will be left to the Committee to appoint its own Secretary.

4. It will be the duty of the Committee to consider—(1) the constitut on and functions of the District Councils, and (2) the relations of the District Councils to the Corporation. These two questions cannot be altogether kept distinct; but under the former head the attention of the Committee will be directed more particularly to the following points:—(*a*) Whether any alteration in the present District areas is desirable, (*b*) the number of members of which each Council should be composed, (*c*) the manner and frequency of elections or appointments, and (*d*) the constitution of the Councils, *i.e.*, whether each Council should consist of a Chairman and a Council and be left to make its own arrangements as to Committees, or whether there should be any statutory Committees similar to the General Committee or whether there should be any other statutory Committees. Under the latter head the following points call for special examinations:—(*e*) Whether the members of the Corporation should be *ex-officio* members of the District Councils containing the wards for

which they have been elected or in which they reside, or in what other way the Councils should be represented on the Corporation, (*f*) the revenues which should be at the disposal of the Councils, and (*g*) the powers and duties which the Councils should be called upon to exercise.

5. As regards the three last heads (*e*), (*f*) and (*g*) referred to in the preceding paragraph the scheme should, if possible, be so arranged that it may in the first instance involve a minimum of interference with existing arrangements, if this can be done without any great sacrifice of efficiency. This is desirable not only on general grounds, but also because the Bengal Legislative Council has already as much controversial legislation before it as it can conveniently deal with for some time to come, and any Act which is required to give effect to the recommendations of the Committee should therefore be as simple and non-controversial as possible. Thus even if the Committee consider that the Councils should ultimately elect members as their representatives on the Corporation they may nevertheless be of opinion that in the first instance the simpler plan of making the members of the Corporation *ex-officio* members of the District Councils may preferably be followed. Again, when outside Municipalities are ultimately brought within the scheme, the revenues of the Councils will have to be completely separated from those of the Corporation, but at first it may be better simply to allow Councils to have control over certain expenditure on the existing scale within their districts, on the analogy of the financial settlements made by the Government of India with local Governments. It is also a question whether the powers and duties of the Councils should be such as may be delegated to them by the Corporation, or whether such powers and duties should be partly defined by law and partly provided for by the Local Government being given power to transfer powers and duties from one body to the other. The former procedure is that contemplated in Sir William Harcourt's Bill of 1884 for the better Government of London and other purposes connected therewith, and the latter corresponds with the procedure laid down in the London Government Act, 1899.

6. The Committee will also have to consider very carefully what additional expenditure the scheme which they are inclined to recommend will probably involve; and they will have to make out the best case they can for the desirability of such a measure of decentralisation as they may advocate. They will probably be able to obtain some assistance from the Act and Bill referred to in the preceding paragraph, and from the report of the Royal Commission of 1894, for the unification of London which forms Appendix III of Mr. Shaw's "Municipal Government in Great Britain." Mr. C. G. H. Allen, I.C.S., who is one of the members of the Commission, has been requested to study on the spot the latest developments in the direction of decentralisation at London, Paris and Berlin, and to obtain copies of laws, rules and other documents throwing light on the system in those cities.

7. The Committee will meet in the beginning of July.

By order of the Lieutenant-Governor of Bengal,

L. P. SHIRRES,
Secretary to the Govt. of Bengal.

Municipal Dept. letters Nos. 1687-93M, dated the 30th March 1905.

From—L. P. SHIRRES, Esq., Secy. to the Govt. of Bengal, Municipal Dept.,
To—The HON'BLE MR. R. T. GREER, C.S.I., I.C.S., Chairman of the Calcutta Corporation, *President*; the HON'BLE DR. JUSTICE ASUTOSH MUKERJEE, M.A., B.L., F.R.A.S., F.R.S.E.; F. W. DUKE, Esq., I.C.S., Commissioner of the Presidency Division; C. G. H. ALLEN, Esq., I.C.S.; the HON'BLE BABU BHUPENDRA NATH BOSE; the HON'BLE BABU NALIN BEHARI SARKAR, C.I.E.; and J. R. BERTRAM, Esq.

I AM directed to forward, for your information, copy of a Resolution No. 1686M., of this date, and to express a hope that it may be possible for you to act on the Committee in connection with decentralization of Municipal work in Calcutta.

2. I am to point out that the object of the Resolution is that the Committee appointed thereby would submit to the Government of Bengal a carefully worked out scheme for decentralization. This scheme will receive the careful consideration of the Government of Bengal, and will have to be submitted to the Government of India for sanction. Before any action is taken to give effect either to that scheme or to any modification of it, it will be published for general criticism and suggestion.

LIBERALITY OF RAJA JOGENDRA NARAIN ROY, OF LALGOLA, IN THE DISTRICT OF MURSHIDABAD.

No. 112T.—M., dated Darjeeling, the 11th April 1905.

From—E. A. GAIT, Esq., Offg. Secretary to the Govt. of Bengal, Municipal Dept.,
To—The Commissioner of the Presidency Division.

I AM directed to refer to the correspondence ending with your letter No. 270G.—Medl., dated the 24th March 1905, regarding the donation of Rs. 6,000 given by Raja Jogendra Narain Roy, of Lalgola, for the construction of an operation ward in the Berhampore Hospital, to be named after his late wife "Rani Manindra Mohini Debi."

2. In reply I am to request that you will be so good as to convey to the Raja an expression of the Lieutenant-Governor's thanks for this further proof of his liberality and public spirit.

3. This letter will be published in the *Calcutta Gazette*.

LIBERALITY OF THE MAHARAJA OF MOURBHANJ.

NOTIFICATION.

No. 57T.G.—The 13th April 1905.—The following extract from a letter No. 56T.G., dated the 13th April 1905, from the Government of Bengal, to the Director of Public Instruction, Bengal, is published for general information:—

H. W. C. CARNDUFF,
Offg. Secy. to the Govt. of Bengal.

I AM directed to acknowledge the receipt of your letter No. 4738, dated the 24th March 1905, in which you report that the Maharaja of Mourbhanj, in the Tributary States of Orissa, has offered to contribute Rs. 7,550 towards the construction of a Hindu Hostel to be attached to the Ravenshaw College, Cuttack.

2. In reply, I am to say that the Lieutenant-Governor has much pleasure in accepting the Maharaja's offer, and I am to request that the thanks of the Government for his liberality may be conveyed to him through the Commissioner of the Orissa Division.

WEATHER AND CROP REPORT.

For the week ending the 17th April 1905.

Burdwan.—Rainfall at Sadar 2·06, Khulna 0·69, Katwa 0·28, Raniganj 0·32. Ploughing continues. Pressing of sugarcane over. Fodder and water sufficient. Cattle-disease reported from Kalna and Raniganj subdivisions. Common rice sells as follows :—

	Srs.	ch.	
Sadar	14	8	per rupee.
Kalna	12	11	
Katwa	14	5	
Raniganj	16	0	

Birbhum.—Rainfall at Sadar 1·35. Weather seasonable. Sugarcane-pressing continues. Fodder and water sufficient. Common rice sells as follows :—

	Srs.	ch.	
Sadar	15	0	per rupee.
Rampur Hát	16	0	

Bankura.—Rainfall at Sadar 0·85, Vishnupur 1·21. Weather seasonable. Hail at Vishnupur on 14th. Ploughing continues. No cattle-disease. Fodder and water sufficient. Common rice sells as follows :—

	Srs.	ch.	
Sadar	16	0	per rupee.
Vishnupur	16	4	

Midnapore.—Rainfall at Sadar 1·03, Tamluk 1·95, Ghatal 3·08, Contai 0·37. Oilseeds being harvested. *Boro* crops thriving. Sugarcane being planted, and jute being sown. Land is being prepared for early rice. Cattle-disease in Panskura and Danton. Fodder and water sufficient. Common rice sells as follows :—

	Srs.	ch.	
Sadar	15	0	per rupee.
Contai	18	0	
Tamluk	14	0	
Ghatal	14	0	

Hooghly.—Rainfall at Sadar 2·37, Serampore 3·20, Arambagh 2·10. Weather seasonable. Lands being ploughed for jute and paddy. No cattle-disease. Fodder and water sufficient. Common rice sells as follows :—

	Srs.	ch.	
Sadar	10	0	per rupee.
Serampore	11	3	
Arambagh	13	8	

Howrah.—Rainfall at Sadar 2·47. Weather getting warm. Sugarcane cultivation going on. Ground being made ready for paddy. Fodder plentiful. Water sufficient for cattle. Rice selling at 13 seers per rupee both at Howrah and Uluberia.

24-Parganas.—Rainfall at Sadar 2·81, Barasat 2·98, Barrackpore 2·93, Basirhat 3·63, Diamond Harbour 1·58. Weather seasonable. State and prospects of standing crops fair. Preparation of lands for *aus* and jute still continues. Common rice sells at 12 seers per rupee. Condition of cattle good. Supply of fodder and water sufficient.

Nadia.—Rainfall at Sadar 0·14, Kushtia 2·61, Meherpur 2·48, Chuadanga 1·78, Ranaghat 1·04. Occasional thunderstorms. Nights cool. No standing crops. Ploughing of lands and sowing of *aus* paddy going on. Fodder and water sufficient. No cattle-disease reported. Common rice sells as follows :—

	Srs.	ch.	
Sadar	12	0	per rupee.
Kushtia	14	8	
Meherpur	12	8	
Chuadanga	12	2	
Ranaghat	13	0	

Murshidabad.—Rainfall at Sadar 0·06, Lalbag 0·45, Kandi 0·47, Jangipur 1·30. Weather seasonable. Harvesting of *rabi* nearly finished. Sowing of *aus* continues in places. No cattle-disease. Fodder and water sufficient. Common rice sells as follows.—

	Srs.	ch.	
Sadar	13	0	per rupee.
Kandi	15	0	
Jangipur ... ... — ...	15	2	
Lalbagh ... ... — ...	13	0	

Jessore.—Rainfall at Sadar 0·70, Jhenida 1 09, Magura 1·40, Narail 1·72, Bangaon 0·93. Weather seasonable. Ploughing going on. Fodder and water sufficient. Common rice sells as follows:—

	Srs.	ch.	
Sadar	15	0	per rupee.
Jhenida	13	8	
Magura	13	0	
Narail	13	12	
Bangaon	13	5	

Khulna.—Rainfall at Sadar 1·05, Bagerhat 1·62, Satkhira 3 46. Weather warmer, lands are being prepared for autumn rice. State of summer rice favourable. Jute-sowing estimated at 12 per cent. No cattle-disease. Fodder and water sufficient. Common rice sells as follows:—

	Srs.	ch	
Sadar	16	0	per rupee.
Bagerhat	16	0	
Satkhira	13	0	

Rajshahi.—Rainfall at Sadar, ·43. Standing crops doing well. Jute and *bhadoi* being sown, and in parts nearly finished. Harvesting of *rabi* nearly over. Fodder and water available. No cattle disease reported. Common rice sells at 13¾ seers per rupee.

Dinajpur.—Rainfall at Sadar nil. Atwari ·21. Weather seasonable. State of standing crops fair. Sowing of jute and *bhadoi* commenced in some places. Fodder and drinking-water sufficient. No cattle-disease. Common rice sells as follows:—

	Srs.	ch.	
Sadar	14	0	per rupee.
Balurghat	13	0	
Thakurgaon	13	0	

Jalpaiguri.—Rainfall at Sadar ·80, Alipur Duars 1·32. Weather seasonable. Harvesting of tobacco nearly finished. Sowing of *bhatoi* paddy and jute commenced in places. Fodder and water sufficient. Common rice sells at 13½ seers per rupee.

Darjeeling.—Rainfall at Sadar 0 86. Weather seasonable. *Hills*—Wheat and barley being harvested. Maize and potato doing well. *Terai*—Ploughing for jute and *bhadoi* going on Coarse rice sells as follows:—

	Srs.	ch.	
Hills	10	0	per rupee.
Terai	14	0	

Maize sells at Darjeeling at 13 and at Kalimpong at 14 seers per rupee.

Rangpur.—Rainfall at Sadar ·40, Kurigram 2·10, Nilphamari ·56. Weather hot. Sowing of jute commenced. Prospect of standing crops fair. Common rice sells as follows:—

	Srs.	ch.	
Sadar	13	0	per rupee.
Gaibanda	14	0	
Kurigram	15	0	
Nilphamari	14	8	

Bogra.—No rain. Weather seasonable. Harvesting of *rabi* crops finished. Outturn estimated at 60 per cent. Pressing of sugarcane approaching completion. Cultivation of lands for *aus* and jute continues and their sowing commenced in places Fodder and water sufficient. Common rice sells at 14½ seers a rupee.

Pabna.—Rainfall at Sadar 0·55, Sirajganj 0 10. Weather partially cloudy and getting warm. Prospects of standing crops fair. Sowing of paddy and jute continues. No cattle-disease. Fodder and water sufficient. Common rice sells at 12¾ seers per rupee.

Dacca.—Rainfall at Sadar 2·08. Fall general. Prospects of crops good. Weather seasonable. Fodder available. No cattle disease. Common rice sells as follows:—

	Srs.	ch.	
Sadar	15	0	per rupee.
Manikganj	13	0	
Munshiganj	14	0	
Narayanganj	14	0	

Mymensingh.—Rainfall at Sadar 1·61, Netrakona 0·76, Tangail 0·46. Weather seasonable Standing crops doing well. Sowing of *aus* and *aman* paddy, sugarcane and jute continues. Fodder and water ample. No cattle-disease. Common rice sells as follows:—

	Srs	ch.	
Sadar	14	0	per rupee.
Jamalpur	16	0	
Kishorganj	Not reported		
Netrokona	17	0	
Tangail	13	8	

Faridpur.—Rainfall at Sadar 0·76, Goalundo 0·75, Madaripur 0·80. Weather seasonable. Sowing of jute and paddy continues. Prospects of crops good. Fodder and water sufficient. No cattle-disease. Common rice sells at 12 seers per rupee.

Backergunge.—Rainfall at Sadar 2·31. Fall general. Weather stormy. Sowing of autumn rice continues but little progress. No cattle-disease. Fodder sufficient. Common rice sells at 13½ seers per rupee.

Tippera.—Rainfall at Sadar 1·77, Brahmanbaria 1·49, Chandpur 3·21. Weather seasonable. Prospects good. Sowing of jute finished and harvesting of *boro* paddy commenced in Chandpur. Sowing of jute and *amon* going on elsewhere. Cattle-disease in Chauddagram and Laksam. Fodder and water sufficient. Common rice sells as follows :—

	Srs. ch.	
Sadar	13 12	per rupee.
Brahmanbaria	16 0	
Chandpur	14 0	

Noakhali.—Rainfall at Sadar 4·03, Feni 4·07. Weather not seasonable. Recent heavy rains have retarded progress of cultivation. Prospects not good in Sadar. Fodder and water sufficient. Cattle-disease reported. Common rice sells as follows :—

	Srs. ch.	
Sadar	14 0	per rupee.
Feni	16 0	

Chittagong.—Rainfall at Sadar 2·65, Cox's Bazar 1·35. Weather cloudy. Lands being ploughed for *aus* crops. No cattle-disease. Fodder and water sufficient. Common rice sells as follows :—

	Srs. ch.	
Sadar	14 0	per rupee.
Cox's Bazar	16 2	

Chittagong Hill Tracts.—Rainfall 1·62. Weather seasonable with occasional showers. *Jooms* still unburnt in many places. Cattle-disease still continues. Common rice sells at 14 seers per rupee.

Patna.—Rainfall nil. Weather getting hot. Threshing and winnowing of *rabi* commenced. State of the standing crops good. Fodder and water sufficient. No cattle-disease. Common rice sells as follows :—

	Srs. ch.	
Sadar	14 0	per rupee.
Barh	14 0	
Bihar	14 0	
Dinapore	Not reported	

Gaya.—Rainfall at Sadar 0·35, Aurangabad 0·05. Weather hot, occasionally cloudy. Harvesting of *rabi* crops almost over. Fodder and water for cattle sufficient. Common rice sells at 14¾ seers per rupee.

Shahabad.—Rainfall nil. Harvesting of *rabi* crops nearly finished. Sugarcane is being planted and irrigated. Fodder and water abundant. Common rice sells at 14 seers per rupee at Sadar.

Saran.—Rainfall at Sadar 0·05. Weather seasonable. Threshing of *rabi* going on. *Rahar* is being harvested. No cattle-disease Fodder and water sufficient. Common rice and maize sell at 14 and 19½ seers per rupee respectively at Sadar.

Champaran.—Rainfall nil. Harvesting of *rabi* continues. Lands being prepared for *bhadoi* crops. Paddy and china are being sown in low lands. No cattle-disease. Fodder and water sufficient. Common rice and maize sell at 14½ and 22½ seers per rupee respectively at Sadar.

Muzaffarpur.—Rainfall at Hajipur 0·03. Weather seasonable. Prospects of crops good. *Rabi* being threshed. Fodder and water sufficient. No cattle-disease. Common rice and maize sell at 13 and 19 seers per rupee respectively at Sadar.

Darbhanga.—Rainfall nil Weather seasonable. Harvesting of *rabi* in progress. Fodder and water sufficient. No cattle-disease. Common rice sells as follows :—

	Srs. ch.	
Sadar	15 14	per rupee.
Samastipur	16 8	
Madhubani	14 15	

Monghyr.—Rainfall nil. Weather hot. Harvesting of *rabi* and pressing of sugarcane nearly finished. Planting of sugarcane and threshing of crops going on. Fodder and water sufficient. No cattle-disease. Common rice sells as follows:—

	Srs.	ch.	
Sadar	13	0	per rupee.
Begusarai	14	0	
Jamui	12	8	

Bhagalpur.—Rainfall nil. Weather seasonable. Harvesting of *rabi* crops continues. Fields are being ploughed for next paddy crops. Cattle-disease reported from thana Colgong in the Sadar subdivision. Fodder and water sufficient. Common rice sells as follows:—

	Srs.	ch.	
Sadar	15	2	per rupee.
Banka	15	0	
Madhipura	17	0	
Supaul	18	0	

Purnea.—Rainfall nil. Weather seasonable. Sowing of jute and *bhadoi* crops and *aghani* paddy in low lands going on. No cattle-disease. Fodder and water sufficient. Common rice sells as follows:—

	Srs.	ch.	
Sadar	12	5½	per rupee.
Araria	15	0	
Kishanganj	12	8	

Malda.—Rainfall nil. Weather getting hot. Sowing of *bhadoi* paddy and jute going on. *Boro* paddy coming into ears. Gathering of *rabi* crops still going on. No cattle-disease. Fodder and water available. Common rice sells at 13 seers per rupee.

Sonthal Parganas.—Rainfall at Sadar 0·01, Deoghar 0·20. Weather seasonable. Sugarcane doing well. *Mohua* being gathered. *Boro dhan* being cultivated at Pakour. Fodder and water sufficient. Common rice sells at 13 seers per rupee at Sadar.

Cuttack.—Rainfall at Jajpur 0·04, Kendrapara 0·09, False Point 0·48. Weather seasonable. *Dalua* being harvested. Sugarcane being cut. Tobacco growing. Fodder and water sufficient. Common rice sells at $17\frac{1}{2}$ seers per rupee at Sadar.

Balasore.—Rainfall at Sadar 2·38. Threshing of *saradh*, pressing of sugarcane and ploughing continue. *Dalua* ripening. Condition of cattle good. Fodder and water available. Common rice sells as follows:—

	Srs.	ch.	
Sadar	17	0	per rupee.
Bhadrak	20	0	

Angul.—Rainfall nil. Weather seasonable. Cattle-disease reported from the interior. Fodder and water available. Common rice sells as follows:—

	Srs.	ch.	
Sadar	20	0	per rupee.
Khondmals	18	0	

Puri.—Rainfall at Sadar 0·12, Khurda 0·45. Weather seasonable. *Dalua*, *mung* and castor being harvested. Cotton and linseed flowering. Tobacco being reaped. Sugarcane getting on well. Condition of miscellaneous crops good. Lands being ploughed for ensuing paddy. Cattle-disease reported from certain parts of Sadar subdivision. Fodder and water sufficient. Common rice sells at 16¼ seers per rupee.

Hazaribagh.—Rainfall at Sadar 0·32. Ploughing of lands going on. Cattle-disease reported from two thanas. *Mohua* dropping commenced. Fodder and water sufficient Common rice sells as follows:—

	Srs.	ch.	
Sadar	12	0	per rupee.
Giridih	13	0	

Marua and *makai* sells at 20 and 16 seers per rupee respectively at Sadar.

Ranchi.—Rainfall at Sadar 0·95. Weather seasonable. Ploughing and manuring in progress. Harvesting of *rabi* nearly finished. *Mohua* crops slightly damaged by the recent rain and wind. Cattle-disease reported from ten thanas. Fodder and water sufficient. Common rice sells as follows:—

	Srs.	ch.	
Sadar	13	0	per rupee.
Gumla	18	8	

Palamau.—Rainfall nil. Weather seasonable. Threshing of *rabi* in progress. Cattle-disease continues. Fodder and water sufficient. Common rice sells at 13¼ seers per rupee.

Manbhum.—Rainfall at Sadar 0·45, Gobindpur 0·23. Weather seasonable. Prospects of crops good. Outturn of *mohua* estimated at 75 per cent. Fodder and water sufficient. Cattle-disease reported from two thanas. Common rice sells as follows :—

	Srs.	ch.	
Sadar	14	0	per rupee.
Gobindpur	12	0	

Singhbhum.—Rainfall 1·59. Lands being prepared for cultivation. Harvesting of *rabi* finished. Cattle-disease continues in thana Chakradharpur. Fodder and water sufficient. Common rice sells at 14 seers per rupee at Sadar.

General Summary.—Rainfall was light and scattered in Bihar, but in Bengal Proper, Orissa and Chota Nagpur it was fairly general and in places heavy. The recent rain has done good generally, but it has somewhat retarded the progress of cultivation in Noakhali and slightly damaged *mohua* in Ranchi. Harvesting of *rabi* is almost over. Ploughing and sowing continue. Prospects fair. Cattle-disease reported from 11 districts. No want of fodder and water. The price of common rice has risen in nine districts and fallen in ten.

By order of the Lieutenant-Governor of Bengal,

R. W. CARLYLE,

Offg. Chief Secretary to the Govt. of Bengal.

REVENUE DEPARTMENT,

The 18th April 1905.

GOVERNMENT OF BENGAL, IRRIGATION DEPARTMENT.

Approximate Return of Traffic on the Circular and Eastern Canals for the week ending Saturday, the 15th April 1905, as compared with the corresponding week of the previous year.

Nature of Cargo.	Week ending Saturday, the 15th April 1905.			Week ending Saturday, the 16th April 1904.		
	Number of boats.	Weight of cargo.	Tolls.	Number of boats.	Weight of cargo.	Tolls.
		Mds.	Rs.		Mds.	Rs.
Rice and paddy	372	1,50,560	2,554	340	80,315	1,093
Jute	5	2,550*	43	20	10,725†	95
Fire-wood	42	46,175	696	24	12,575	183
Other articles	537	1,89,069	2,467	459	1,16,375	1,379
Total ...	966	3,89,354	5,749	843	2,19,990	2,750

* Weight by canal measurement = 4,250 maunds.
† Ditto ditto = 11,500 ,,

Results of the Meteorological Observations taken at the Alipore Observatory from 9th to 15th April 1905.

Month.	Date.	Maximum in sun.	Number of hours of bright sunshine.	Mean pressure barometer at 32° Fahr.	Temperature.				Hygrometry				Wind.		Rain.	Weather.
					Mean	Maximum	Range.	Minimum.	Mean wet bulb.	Vapour tension.	Dew point.	Humidity.	Prevailing direction.	Miles recorded.		
1905.				Inches.	°	°	°	°	°	Inch.	°	%			Inches.	
April	9th	147·9	8·7	29·81	85·3	98·8	25·7	73·1	72·7	0·658	66·8	61	SSW and WSW	170	Nil	Chiefly clear.
,,	10th	149·1	8·8	·7	85·4	98·6	25·0	73·6	69·2	·623	60·2	49	WSW and WNW	123	,,	Chiefly clear, ⌓.
,,	11th	148·8	8·4	·838	85·3	97·0	22·1	74·9	74·0	·736	70·0	62	SW by S and variable.	180	,,	Partially cloudy, ⌓, o, g, d, p, t, <, /.
,,	12th	142·7	1·4	·853	75·6	83·2	13·8	69·4	69·9	·692	68·2	80	SSW and variable	182	0·30	Chiefly cloudy, o, g, d, p, t, <, /.
,,	13th	148·2	8·2	·773	75·7	90·9	23·1	67·8	74·4	·826	73·5	84	SW and variable	123	2·03	Partially cloudy, t, <, /.
,,	14th	147·1	6·2	·776	81·5	89·2	14·0	75·2	76·1	·868	74·9	82	SSW and variable	158	Nil	Chiefly cloudy, o, g, p, t, <.
,,	15th	148·0	7·6	·813	79·8	91·9	20·8	70·1	76·1	·881	75·4	86	S and SSW ...	162	0·48	Partially cloudy.

The mean pressure of the seven days	Inches.	29·820
The average pressure of the corresponding period for 24 years, Surveyor-General's Office		29·748
	Hours.	
The total number of hours of bright sunshine		49·3
The maximum possible number of hours of sunshine		87·9
	°	
The mean temperature of the seven days		81·7
The average temperature of the corresponding period for 24 years, Surveyor-General's Office		85·0
The extreme variation of temperature		31·0
The maximum temperature		98·8
	Miles.	
The highest velocity of the wind in one hour		15
	%	
The mean relative humidity		72
The average relative humidity of the corresponding period for 24 years, Surveyor-General's Office		69
	Inches.	
The total fall of rain from 9th to 15th April 1905		2·81
The average fall of the corresponding period for 24 years, Surveyor-General's Office		0·24
The total fall from 1st January to 15th April 1905		8·87
The average fall of the corresponding period for 24 years, Surveyor-General's Office		3·44

The mean pressure, temperature, etc., are deduced from eye observations.

The maximum and minimum temperatures are obtained from self-registering thermometers. All the thermometers are verified and the readings have been corrected to a standard constructed and verified at the Kew Observatory. They are exposed under a thatched shed open at the sides, and are suspended four feet above the ground.

The barometer readings are corrected to those of the standard, Newman's No. 86, formerly at the Surveyor-General's Office.

The hygrometric elements are obtained from Tables III, IV and V of the official tables computed in the Meteorological Office, and based on Regnault's modifications of August's formula.

The directions and the movement of the wind are taken from the trace of a Beckley's anemograph.

The mouth of the rain-gauge is one foot above the ground. Rainfall reported on any day is for 24 hours preceding 8 A.M. of that day.

⌓, dew; o, overcast; g, gloomy; d, drizzling rain; p, passing temporary showers; t, thunder; <, lightning; /, strong wind.

METEOROLOGICAL OFFICE, GOVT. OF INDIA,
Alipore (Calcutta), the 17th April 1905.

G. W. KÜCHLER,
for *Meteorological Reporter to the Govt. of India and Director-General of Indian Observatories.*

Meteorological Report of the Province of

STATION OBSER

Meteorological Division.	Division.	District.	Representative stations.	Air Pressure.					Wind.		Temperature.					
				Highest, 8 A.M., barometer reading.	Lowest, 8 A.M., barometer reading.	Mean, 8 A.M., reduced to 32°.	Mean reduced to sea-level and constant gravity, Lat. 45°.	Variation from normal mean.	Mean direction at 8 A.M.	Mean velocity in miles daily.	Highest of month.	Lowest of month.	Mean daily maximum temperature	Mean daily minimum temperature.	Mean daily temperature.	Variation from normal mean.
North-West Bengal.	Burdwan	Burdwan	Burdwan	30·079	29·685	29·836	29·897	+·014	N45°W	59	96·9	59·8	87·0	66·5	76·8	—4·3
			Ranigunj	29·860	29·457	29·609	29·908	+·094	N75°W	47	96·5	57·6	86·8	64·4	75·1	—5·2
		Birbhum	.....													
		Bankura	Bankura	29·868	29·404	29·614	29·887	+·016	N4°E	70	99·6	61·2	88·1	66·9	78·5	—3·1
		Midnapore	Midnapore	30·032	29·635	29·785	29·868	—·003	S63°E	67	94·3	61·7	a87·0	68·1	a77·6	—4·3
		Hooghly	.....													
		Howrah	.....													
	Presidency	24-Parganas	Sangor Island	30·130	29·750	29·900	29·969	—·003	S14°W	300	87·4	62·5	83·9	c71·4	c77·7	—3·5
		Calcutta	Calcutta	30·171	29·758	29 919	29·986	+·014	S37°W	120	95·0	61·4	86·0	67·4	76·7	—3·5
		Nadia	Krishnagar	30 136	29·735	29 891	29·959	+·015	S21°W	77	96·1	58·0	85·7	65·5	75·6	—3·2
		Murshidabad	Berhampore	30·108	29 705	29·872	29·891	+·026	S70°W	66	96·8	57·2	85·7	64·6	75·1	—4·1
		Jessore	Jessore	30·141	29·736	29·907	29·968	+·016	S5°W	62	94·0	59·1	85·4	66·1	75·8	—4·6
		Khulna	.....													
North Bengal.	Rajshahi	Rajshahi	Rampur Boalia	30·092	29·709	29·867	29·936	+·024	W	68	95·1	56·1	84·8	63·4	74·0	—3·8
		Dinajpur	Dinajpur	30·050	29 691	29·901	29 844	+·023	S22°W	59	96·8	61·9	84·0	60·0	72·9	—3·2
		Jalpaiguri	Jalpaiguri	29·886	29·391	29 641	29 804	+·014	N67°E	46	94·9	50·1	80·9	58·6	69·8	—2·5
		Darjeeling	Darjeeling	25·154	24·824	d28 966	d28·911	—·049	S47°W	e361	65·7	35·0	d54·6	d40·8	d47·7	—1·5
		Cooch Behar	Cooch Behar	29·965	29·548	29·769	29 867	—	E	61	90·4	52·2	80·5	59·8	70·2	—
		Rangpur	Rangpur	30·034	29·596	29·813	29·895	+·015	S45°W	82	94·3	?	83·7	?	?	?
		Bogra	Bogra	30·086	29·631	29·851	29 876	+·026	S5°W	45	96·2	55·2	84·4	62·9	73·7	—3·4
		Pabna	Sirajganj	30 139	29 711	29·895	29 895	+·019	S6°W	70	94·8	55·4	84 5	63·3	73·8	—3·4
Dacca	Dacca	Dacca	Narayanganj	30·173	29·745	29·938	29·908	+·022	S13°W	106	98 1	59·8	84·4	66·6	75·5	—3·6
		Mymensingh	Mymensingh	30 135	29·708	29·891	29 903	+·023	S70°E	64	91·8	55 1	83·5	63·2	73 9	—3·5
		Faridpur	Faridpur	30·140	29·727	29·906	29·905	+·026	S4°W	72	96 8	58·6	84·3	64·0	74·1	—3 3
		Backergunge	Barisal	30 164	29·767	29·944	29·908	+·027	S34°E	67	92·3	58·2	83·9	64·6	74·5	—4·9
Chittagong	Chittagong	Tippera	Comilla	30 141	29·730	29·919	29·908	+·018	S6°E	95	91·3	59·3	84·6	b57·7	b77·0	—1·5
		Noakhali	Noakhali	30·118	29·727	29·906	29·896	+·009	S24°E	105	97·7	59 0	82·5	66·9	74·7	—1·9
		Chittagong	Chittagong	30 063	29·704	29·878	29 916	+·018	S75°E	118	86 5	60·6	83 3	64·7	75·0	—2·2
		Chittagong Hill Tracts	.....													
Bihar.	Patna	Patna	Bankipore	30·018	29·647	29·741	29·864	+·017	S50°W	141	96·0	55·4	84 2	61·7	73 0	—4·5
		Gaya	Gaya	29·838	29·387	29·588	29·960	+·019	S61°W	93	96 0	56·3	86 1	62·2	74·7	—3·1
		Shahabad	Dehri	29·863	29·443	29·674	29 891	+·006	S33°W	105	97·3	56·1	86 1	64 6	75 4	—3·4
			Buxar	29·969	29 519	29·694	29·969	+ 006	S11°W	173	96 0	54·9	84 4	61·1	72·8	—4·3
			Arrah	30·084	29·596	29·763	29 913	+·007	S35°W	73	97·4	56 1	85·0	63 6	74·3	—3·8
		Saran	Chapra	29 996	29 571	29 737	29 879	+·021	S31°W	73	96 9	55·1	84·9	60·6	72 8	—3·3
		Champaran	Motihari	29 948	29·525	29·691	29 866	+·028	S61°W	149	94 4	48·2	83·3	60·1	69·7	—3·7
		Muzaffarpur	Muzaffarpur	29·968	29·575	29·746	29 867	+·023	S72°W	99	95 3	51·3	84 7	58 5	70·6	—
		Darbhanga	Darbhanga	30·043	29 583	29 754	29 899	+·021	S5°W	84	96 6	51·3	83·9	59·3	71·4	—4·0
	Bhagalpur	Monghyr	.....													
		Bhagalpur	Bhagalpur	30·018	29 599	29·787	29·864	+·024	S30°W	94	97 7	55 7	84 5	61·9	73·4	—3·6
		Purnea	Purnea	30·045	29·614	29·797	29·902	+·019	S54°W	106	96 3	56·6	86 2	59·6	71·9	—3 3
		Malda	Malda	30·026	29·599	29·765	29 871	+·028	S27°W	124	96·6	53 1	84 1	63 3	73·9	—3·1
		Santhal Parganas	Naya Dumka	29·864	29 576	29·733	29·836	+·023	N18°E	37	97 5	53 6	85·7	63·6	74·6	—4·0
Orissa	Orissa	Cuttack	Cuttack	30·026	29·719	29 861	29·896	+·009	S31°W	96	99 4	62·2	86 4	73·1	85·2	—1·5
			False Point	30·150	29·768	29·923	29 966	+·007	S33°W	240	91·5	63 0	84·9	73·7	78·8	—1·9
		Balasore	Balasore	30 134	29·730	29 889	29·938	+·007	S73°W	109	94 4	63·7	86 4	68·7	78·6	—2·6
		Puri	Puri	30 170	29·764	29·928	29·891	+·015	S49°W	339	89·3	66 1	85·2	75·6	80·4	—
			Gopalpur	30·106	29·723	29 989	29 861	+·013	S65°W	387	86 7	70·5	83·1	74·4	78·8	—0·3
Chota Nagpur.	Chota Nagpur.	Hazaribagh	Hazaribagh	29·144	27·738	27 894	29·896	—·003	N26°W	169	91·7	53·3	80 1	60·8	71·4	—4·9
		Ranchi	Ranchi	29·063	27·625	29·781	29·906	+ 008	N63°W	201	91·7	56 9	83·0	61·3	72·1	—5·4
		Palamau	Daltonganj	29 469	29·054	29·194	29·911	—	S51°E	89	98·6	51·9	87·5	60·6	73·7	—
		Manbhum	Purulia	29·367	28·948	29·094	29 891	—	N78°W	90	99·6	58·3	c87·6	c64·3	c76·0	—
		Singhbhum	Chaibasa	29·419	28·999	29·154	29·896	+·010	S46°W	44	99·9	61·5	85·1	66·6	77 8	—3·1
Assam.	—	Dibrugarh	Dibrugarh	29·991	29·533	29·687	29·916	—	N63°E	58	94·7	53·4	74·0	58·6	66·3	—
		Sibsagar	Sibsagar	29·124	28·640	29·800	29·913	—·017	N35°E	66	96·3	54 9	76 0	58·8	66·9	—3·4
		Tezpur	Tezpur	29·969	29·610	29·679	29·900	—	N75°E	128	93·1	53·5	79·9	60·0	69·5	—
		Kamrup	Gauhati	29·972	29·679	29·748	29·907	—	N45°E	70	90 0	49·6	82·5	55·5	70·4	—
		Goalpara	Dhubri	30·087	29·671	29·816	29·936	+·016	S30°E	138	91·7	53·3	82·9	60·8	71·4	—3·6
		Cachar	Silchar	29 993	29 671	29·869	29·950	+·015	Calm	7	93·5	54·9	86·6	62·5	71·6	—3·1
		Khasia and Jaintia Hills.	Shillong	26·316	24 891	25·133	25·980	—	S35°W	163	76·1	49·5	67·2	49·7	58·5	—
			Cherrapunji	25·8·3	25·347	25·706	25·957	—	S49°W	264	69 7	48·0	64·4	53·6	59 0	—

(a) Mean of 29 days. (b) Mean of 18 days. (c) Mean of 29 days

Bengal for the month of March 1905.

VATIONS.					DISTRICT OBSERVATIONS.										
HUMIDITY.		CLOUD.			RAINFALL—										DISTRICT.
					Of month.					Since 16th October 1904.					
Mean, 8 A.M.	Variation from normal mean.	Mean cloud amount, 8 A.M.	Variation from normal mean, 8 A.M.	Rainfall.	Mean of district.	Normal mean.	Variation from mean.	Number of rainy days.	Normal mean number of rainy days.	Mean of district	Normal mean.	Variation.	Mean number of rainy days.	Normal mean number of rainy days.	
79	+9	4·6	+2·6	6·21	3·96	1 06	+2·89	5·50	1 80	7·60	4·61	+3 39	13·20	6 86	Burdwan.
74	—	2·8	—	2·69											
					3·72	0·67	+3·05	4·33	1 16	7·54	3·46	+3·79	11·50	5·66	Birbhum.
70	—	3·3	—	1·54	2·57	1·00	+1·57	4·90	1·68	6·56	3·91	+2·65	13·50	6·36	Bankura.
76	—	4·6	—	3 61	3·62	1·13	+2·49	6·13	1·96	8·50	4 85	+3·65	14·33	6·49	Midnapore.
					2·05	1·28	+0·77	4·00	2·10	6·47	4·93	+1 54	13·33	7·46	Hooghly.
					4·11	1·02	+3·09	7·33	1·92	7·81	4·16	+3 65	14·33	6·26	Howrah.
87	—8	6·1	+ 1·9	7·67	3·43	1·29	+2·14	6 35	2·04	7·63	5·81	+1·82	14·44	7·96	24-Parganas.
85	+4	5·6	+ 3 1	3·48	3·43	1·14	+2·34	9·00	3 00	6·94	4 48	+2·46	17·00	7 63	Calcutta.
83	—	5·0	—	4·55	4·43	1·48	+2·94	6·60	2·23	8·80	5·34	+3·46	13·40	7·23	Nadia.
77	+8	4·5	+ 2·1	3·15	3·91	0·90	+3·01	4 60	1 54	7 14	3·97	+3·17	11·05	6 11	Murshidabad.
85	+5	4·7	+ 1·6	2·23	3·33	1 81	+1·52	6·00	2·79	8·25	6·15	+2·10	14 20	8·40	Jessore.
					5·21	1·49	+4 23	8·60	2·21	9·96	5·19	+3·99	16·80	7 85	Khulna.
77	—	2·6	—	6·14	3 23	0·95	+2·28	4·63	1·57	6·29	3·62	+2·67	11·83	5 85	Rajshahi.
71	—	4·5	—	2·03	1·68	0·72	+0·91	4·40	1 51	7·05	3 61	+4·37	10·20	4 91	Dinajpur.
80	—	3·8	—	2·81	2·53	1·69	+0·84	5·00	2 59	9·38	5 47	+3·91	13 00	5 31	Jalpaiguri.
d 64	—8	d 4·0	—0·7	1·11	1·66	1·76	—0·10	3·67	3 35	13·28	5·63	+6·65	11·94	9·97	Darjeeling.
84	—	4·6	—	2·59	2·33	1·67	+0 66	5·20	2·45	9·17	6·14	+5 03	10·13	6·71	Cooch Behar.
80	—	3·8	—	1·48	2·00	1·03	+0·97	5·00	1·69	7·64	3·64	+4·00	10 50	5·13	Rangpur.
81	—	3·6	—	2·93	3·65	1·02	+2·63	5·25	1·87	6·97	4·51	+2·46	11·04	6·24	Bogra.
92	—	4·9	—	3·12	3·03	1·38	+1·65	6·00	2·39	5·73	5·05	+0·67	13 50	7·96	Pabna.
88	+8	6·4	+3·1	6·62	5·30	2·43	+2·87	7·40	3·41	9·31	6 86	+2 33	14·00	9 89	Dacca.
88	—	7·7	—	3·93	3·56	1·87	+1·69	6·13	2 83	6·79	5·38	+1·31	13·01	8·13	Mymensingh.
86	—	4·8	—	4·68	5·81	2·26	+3·55	8·23	3·61	10·43	6·69	+3 74	17·60	9·40	Faridpur.
86	—	6 8	—	5·03	8·09	1·64	+6·36	11·45	2 54	14·11	7·20	+6 91	20 61	8·96	Backergunge.
87	—	5·6	—	5 18	5·25	2·96	+2·30	7·30	3 53	9 45	7·42	+2·03	14·24	9·98	Tippera.
86	—	4·9	—	9·23	9·73	2 90	+6·83	9·75	3·39	16·46	9·21	+7·25	20·60	10·11	Noakhali.
84	0	4·3	+0·1	16·06	15·07	2·28	+12·79	10·43	2·51	20·40	9·23	+11·17	13·42	9 01	Chittagong.
					13·24	2 89	+10·35	11·00	3·38	21·53	9·17	+12·36	17·80	10·13	Chittagong Hill Tracts.
64	+13	3·1	+1·1	2·54	1·73	0 86	+1·36	6·00	0·53	5·23	3·01	+2·74	9 56	5·22	Patna.
68	+15	4·0	+1·9	1·38	1·54	0·42	+1·12	3 50	0 86	5·98	2 93	+3·09	10·72	5·17	Gaya.
64	—	4·7	—	0·22											
59	—	3·6	—	1·63	1·07	0·26	+0·81	3·00	0·56	5·76	3·45	+2·30	10 81	5 41	Shahabad.
63	—	1 5	—	1·76											
66	—	3·3	—	0·96	0·26	0·16	+0·10	4·00	0·46	10·35	3·02	+8·33	12·00	4 35	Saran.
76	—	3·9	—	0 64	0·77	0·44	+0·33	3·00	0·63	8·87	2 53	+6·34	11 75	4 64	Champaran.
71	—	1 8	—	1·25	1 04	0·38	+0·66	3·50	0 56	7·08	2·07	+5·01	10·30	4 56	Muzaffarpur.
70	+16	2·9	+1·7	1·34	0 99	0·38	+0·61	3·40	0 73	7·11	2·48	+4 46	9·30	4·21	Darbhanga.
					2·14	0 35	+1·79	3·50	0·73	7·83	2·98	+4 85	11 01	4·95	Monghyr
68	—	2·5	—	1·56	1 55	0 44	+1·11	3·00	0·35	8·17	2 66	+5 51	10 23	4 74	Bhagalpur.
73	+12	1·3	—0 2	1 51	1·26	0·49	+0·76	2·50	0·39	6·97	2·33	+4 63	8·17	4 26	Purnea.
78	—	1·7	—	1·43	2·01	0·56	+1 45	4·25	1·07	7·73	3·23	+4·50	13 26	4 81	Malda.
93	—	2·5	—	3·49	3·00	0 63	+2·37	3·71	0 54	9·49	3 13	+3·77	10 55	4 95	Santhal Parganas.
78	+6	4·5	+2·6	2·47	2·13	1·17	+0·96	3·00	1·07	5·18	6 30	—1·33	11·01	5 49	Cuttack.
86	—5	6·5	+3·6	0·91											
79	—	5·0	—	4·07	3·07	1·49	+2·48	6·17	2·31	7·21	5 97	+1·24	13 57	5 44	Balasore.
87	—	2·5	—	2·99	2·04	0 90	+1·14	4 60	1·55	6·94	7·39	—0·45	13·73	5 45	Puri.
81	—	1 5	—	1·00											
81	+10	5·7	+4·1	0·67	2·28	0·70	+2·28	5·50	1 40	8 48	3 26	+4·82	14·64	6 23	Hazaribagh.
55	—	4·9	—	0·73	1·14	0·68	+0 46	3·17	1 41	6·26	3 34	+2·92	13 80	6 48	Ranchi.
62	—	3·9	—	1·19	1·70	0·51	+1·19	3·50	1·25	5·96	3·05	+2·26	11·80	6 15	Palamau.
e 68	—	3·3	—	1·34	2·09	0·82	+1·27	4 00	1·23	6·73	3·46	+1·44	11·73	6·46	Manbhum
77	—	3·0	—	2·16	1·96	0·76	+1·20	4·43	1·34	6 80	3 33	+3·56	13·03	6 26	Singhbhum
90	—	7·6	—	6·08											Dibrugarh.
84	+5	7·6	+1·6	6·80											Sibsagar
84	—	4·2	—	3 76											Tezpur.
79	—	6·4	—	2·43											Kamrup.
77	+3	4·9	+2·2	1·86											Goalpara.
87	+8	6 1	+1·7	11·90											Cachar.
93	—	3·2	—	2·40											Khasia and Jaintia Hills.
74	—	3·9	—	6 81											

(d) Mean of 26 days. | (e) Mean of 27 days.

Table of Rainfall recorded at stations

Meteorological Division.	Division.	District.	Station.	1	2	3	4	5	6	7	8	9	10	11	12	13	14	15	16	17	18	19	20
South-West Bengal.	Burdwan.	Burdwan ...	Kalna ...	0·03	0·05	...	...	...	...	...	...	0·58	0·31	...	0·04	...	...	...	...	...	...	...	...
			Burdwan ...	...	0·08	...	...	...	...	0·10	...	0·89	0·01	...	0·03	...	...	...	...	...	...	...	...
			Katwa ...	0·47	0·33	...	...	...	...	0·04	0·50	1·81	0·01	...	0·95	...	...	...	...	...	...	...	...
			Raniganj ...	0·08	0·58	...	...	...	...	0·12	0·02	0·93	0·01	...	0·65	...	...	...	...	...	0·31	...	...
			Mankur ...	0·18	0·03	...	...	...	...	...	0·43	1·53	...	...	...	...	...	...	...	...	0·05	...	...
		Birbhum ...	Suri ...	0·12	...	...	...	...	...	...	...	1·60	2·15	...	...	...	...	...	...	...	...	...	...
			Hetampur ...	0·71	0·08	...	...	...	...	...	0·63	1·10	0·02	...	0·26	...	...	...	...	...	...	...	...
			Rampur Hat	...	...	...	...	...	...	...	0·82	2·68	...	...	0·03	...	...	...	...	...	...	...	...
			Bolpur ...	0·11	0·64	...	...	...	...	0·05	0·50	0·72	0·16	...	0·82	...	...	...	...	...	0·04	...	...
			Murari ...	...	...	...	...	...	0·30	...	2·50	...	...	...	...	...	...	...	...	...	...	...	...
			Labpur ...	0·20	0·19	...	...	...	...	0·04	1·79	2·72	...	0·03	0·04	...	...	...	...	...	...	...	...
		Bankura ...	Bankura ...	...	0·10	...	...	...	...	0·28	0·02	0·26	...	...	...	...	...	...	...	...	...	...	...
			Vishnupur ...	...	0·37	...	...	...	...	0·03	...	0·12	...	...	0·09	...	...	...	...	...	...	...	...
			Maliara ...	...	0·35	...	...	...	...	...	0·10	1·42	...	...	...	...	...	...	...	...	0·07	...	...
			Khatra ...	...	0·02	...	...	...	...	0·03	...	...	...	...	...	...	...	...	...	...	...	...	...
			Indas ...	...	0·40	...	...	...	...	0·06	...	0·10	...	...	0·10	...	...	...	...	...	...	...	...
			Kotalpur ...	0·40	...	...	...	...	...	...	...	0·25	...	...	...	...	...	...	...	...	...	...	1·15
			Onda ...	0·10	0·11	...	...	...	...	...	0·06	0·34	...	...	0·10	...	...	...	...	...	...	...	...
			Gangajalghati	...	0·09	...	...	...	...	...	0·59	0·90	...	...	...	...	...	...	...	...	...	...	...
			Raipur ...	0·45	0·64	...	...	...	...	0·13	...	...	...	...	0·15	...	...	...	...	...	...	...	...
			Sonamukhi ...	...	0·61	...	...	...	...	0·07	...	0·87	...	...	...	...	...	...	...	...	...	...	...
		Midnapore ...	Contai ...	...	0·04	0·50	...	...	...	0·01	0·04	...	0·08	0·01	1·37	0·25	...	...	...	...	...	0·57	...
			Tamluk ...	0·08	1·50	...	...	...	...	0·34	...	...	...	...	0·20	...	...	...	...	...	...	...	...
			Midnapore	0·38	1·63	...	...	...	...	0·04	0·08	...	...	...	...	...	...	...	...	...	...	...	...
			Ghatal .	0·23	0·31	...	...	...	...	0·09	...	0·02	...	...	...	0·19	...	...	...	...	...	...	...
			Kukrahaty ...	0·14	0·21	...	...	...	...	...	...	...	...	...	0·38	...	...	...	...	0·05	...	...	...
			Garhbeta ...	0·04	0·69	...	...	...	...	...	0·04	...	...	...	0·12	...	...	...	...	...	...	...	...
			Panskura ...	0·36	0·78	0·23	...	...	...	0·14	...	...	...	...	0·23	...	...	...	...	...	...	...	...
			Dantan ...	0·60	0·08	0·10	...	...	...	0·40	0·04	...	0·21	...	0·03	...	...	...	...	...	...	...	0·08
		Hooghly ...	Serampore ...	0·16	1·60	...	...	...	...	0·04	...	...	0·01	...	0·19	0·01	...	...	...	...	...	...	...
			Hooghly	...	0·45	...	...	...	...	0·04	...	...	0·30	...	1·37	...	...	...	...	...	...	...	...
			Arambagh (Jahanabad)	0·11	0·56	...	...	...	...	0·02	...	0·01	...	...	...	...	...	...	...	...	...	...	...
		Howrah ...	Howrah ...	0·36	0·21	0·12	...	...	...	0·13	...	...	0·05	...	0·46	0·51	...	...	...	...	0·08	...	...
			Mohesreka ...	0·17	1·50	0·23	...	...	...	0·14	...	...	...	...	0·36	0·07	...	...	...	...	...	...	...
			Uluberia ...	0·20	1·02	...	...	...	...	0·19	...	...	...	...	0·35	0·06	...	...	...	...	...	...	...
			Amta ...	0·22	0·85	0·08	...	...	...	...	...	...	...	...	...	...	...	...	...	...	...	...	...
	Presidency.	24-Parganas ...	Saugor Island	0·06	0·12	0·08	...	...	...	...	0·30	...	0·76	...	1·30	0·24	...	...	...	...	0·30	0·64	...
			Diamond Harbour.	0·14	0·30	...	...	...	...	...	...	...	0·22	...	0·15	0·18	...	...	...	...	...	...	...
			Budge-Budge	0·22	1·11	0·12	...	...	...	0·11	...	...	0·12	...	0·24	0·12	0·02	...	...	...	...	...	...
			Canning Town	0·06	0·91	...	...	...	...	...	...	...	0·14	0·06	1·12	0·08	...	...	...	...	...	...	...
			Alipore (Obsy.)	0·16	1·07	0·18	...	...	...	0·12	...	...	0·08	...	0·14	0·18	...	...	...	...	...	...	...
			Barrackpore	0·12	1·46	...	...	...	...	...	0·05	...	0·08	...	0·09	0·11	...	...	...	...	...	...	...
			Dum-Dum ...	0·26	0·30	...	...	...	...	3·10	...	...	0·12	...	0·40	0·50	...	...	...	...	...	...	...
			Barasat ...	0·16	2·04	...	...	...	...	0·06	...	...	...	...	0·23	...	...	...	...	...	...	...	...
			Basirhat	...	0·95	...	...	...	...	...	...	...	0·15	...	0·09	...	...	...	...	...	...	...	...
		Nadia ...	Ranaghat	...	0·11	...	...	...	...	0·02	...	0·27	0·72	...	0·04	...	...	...	...	...	...	...	...
			Krishnagar ...	0·38	1·12	...	...	...	...	0·06	0·05	0·87	0·04	...	0·50	...	...	...	...	...	...	...	...
			Chuadanga ...	0·04	0·36	...	...	...	...	0·04	0·30	0·85	0·57	...	0·65	...	...	...	...	...	...	...	...
			Meherpur ...	0·06	0·06	...	...	...	...	0·06	0·36	0·90	0·04	...	0·90	...	...	...	...	...	...	...	...
			Kushtia	...	0·06	...	...	...	...	0·01	0·43	1·20	0·45	...	0·16	...	...	...	...	...	...	...	...
		Murshidabad	Kandi ...	0·65	0·26	...	...	...	...	...	0·91	2·00	...	...	0·22	...	...	...	...	...	...	...	...
			Berhampore .	...	0·09	...	...	...	...	...	0·58	1·80	0·06	0·04	0·21	...	...	...	...	...	...	...	...
			Lalbagh ...	...	...	...	...	...	...	0·06	0·05	3·40	0·04	...	0·30	...	...	...	...	...	...	...	...
			Azimganj ...	...	0·17	...	...	...	...	...	0·48	3·76	...	...	0·10	...	...	...	...	...	...	...	...
			Jangipur ...	0·04	...	...	...	...	...	...	0·47	2·50	...	0·06	...	...	...	...	...	...	0·06	...	...
			Lalgola ...	...	0·32	...	...	...	...	...	0·23	2·34	...	...	0·13	...	...	...	...	...	...	...	...
			Akriganj ...	...	...	...	...	...	...	...	0·48	1·03	1·20	0·06	...	...	...	...	...	...	...	...	...
			Pathabari ...	...	0·10	...	...	...	...	...	0·90	1·30	...	...	0·30	...	...	...	...	...	...	...	...
			Dumkal ...	...	0·13	...	...	...	...	...	1·30	2·12	...	0·30	...	...	...	...	...	...	...	...	...
		Jessore ...	Narail ...	...	1·30	...	...	...	...	...	...	0·30	...	...	...	...	...	...	...	...	0·30	...	...
			Jessore ...	...	0·09	...	...	...	...	0·02	...	0·24	0·51	...	0·13	0·02	...	...	...	...	...	...	...
			Jhenida ...	...	0·05	...	...	...	...	...	...	0·20	1·20	...	0·09	...	...	...	...	...	...	...	...
			Magura ...	0·09	0·21	...	...	...	...	0·01	0·13	0·15	0·90	...	0·51	...	...	...	...	...	...	...	0·02
			Bongaon ...	...	0·09	...	...	...	...	0·04	...	0·15	0·80	...	0·16	0·06	...	...	...	...	...	...	...
		Khulna ...	Satkhira ...	...	1·36	...	...	...	...	...	...	...	0·57	...	1·03	0·37	...	...	...	...	0·37	...	...
			Bagerhat ...	...	1·41	...	...	...	...	...	...	...	1·10	...	0·85	0·57	...	...	0·06	0·16	0·40	...	...
			Khulna ...	0·08	1·91	...	...	...	...	...	...	...	0·90	...	1·35	0·42	...	...	...	0·44	0·36	...	...
			Kaliganj ...	...	0·50	...	...	...	...	...	...	...	1·25	...	1·30	0·60	...	...	...	...	...	...	...
			Nakipur ...	...	0·70	2·50	...	...	...	...	...	...	0·33	...	0·62	0·46	...	...	...	...	...	...	...
			Dumaria ...	...	1·16	...	...	...	...	...	...	...	0·37	1·30	0·40	...	...	...	...	0·30	0·46	...	...
			Rampal .	0·77	0·02	...	...	...	...	...	...	0·10	...	1·06	0·35	...	...	...	...	0·23	...	...	...
			Kalaroa ...	0·40	...	...	...	...	...	...	...	...	0·60	...	0·70	0·48	...	...	...	...	0·09	...	0·12
			Paikgacha ...	...	0·72	0·01	...	...	...	...	...	...	0·18	...	1·45	0·22	...	...	...	...	0·07	...	...
			Mollahat ...	...	0·19	...	...	...	...	...	...	0·55	...	...	0·75	0·16	...	...	...	...	...	...	...
			Morelganj ...	...	0·96	1·30	...	...	...	...	...	...	0·67	...	3·05	...	...	...	...	...	0·01	...	1·36
			Tala ...	...	...	...	...	...	...	...	...	...	1·14	...	1·65	0·07	...	...	...	...	0·80	...	0·60
North Bengal.	Rajshahi.	Rajshahi ...	Boalia ...	...	0·02	...	...	...	...	...	0·21	2·77	0·19	0·60	...	...	...	...	...	...	...	...	...
			Natore ...	...	0·02	...	...	...	...	...	0·26	2·04	0·29	...	0·08	...	...	...	...	...	...	...	...
			Naogaon ...	...	...	...	...	...	...	...	...	1·40	...	...	0·21	...	...	...	...	...	0·30	...	...
			Lalpur ...	...	0·09	...	...	...	...	...	1·30	1·70	0·26	...	...	...	...	...	...	...	...	...	...
			Manda .	...	0·06	...	...	...	...	...	0·12	1·26	...	...	0·16	...	...	...	...	...	0·30	...	...
			Mahadebpur	...	...	...	...	...	...	...	0·17	1·33	...	0·09	0·30	...	...	...	...	...	0·12	...	...
			Tanor ...	...	...	...	...	...	...	...	0·11	0·29	...	0·15	...	...	...	...	0·08	0·08	0·09	...	...
		Dinajpur ...	*Nithpur* ...	...	...	...	...	...	...	...	0·16	1·24	...	0·09	...	...	...	...	...	...	0·78	...	...
			Nawabganj ...	...	...	...	...	...	...	...	...	0·99	0·34	0·11	0·07	...	...	...	...	...	0·09	...	...
			Gangarampur ...	...	...	...	...	...	...	...	0·30	1·15	...	0·13	...	...	...	...	...	...	...	...	...
			buraman	...	...	...	...	...	...	...	0·18	1·17	...	0·17	...	...	...	...	...	...	...	...	...
			Raiganj .	...	...	...	...	...	...	...	0·17	0·92	...	0·27	0·03	...	...	...	...	...	0·13	...	...
			Dinajpur ...	...	...	...	...	...	...	...	0·19	1·33	0·02	0·16	0·17	...	...	...	...	0·08	0·11	...	...
			Balurghat	...	...	...	...	...	...	...	...	0·75	...	0·12	...	...	...	...	...	...	...	...	...
			Thakurgaon .	...	...	...	...	...	...	...	0·30	0·72	...	0·16	...	...	...	...	...	...	0·28	...	...
			Pirganj ...	...	...	...	...	...	...	0·15	1·05	...	0·25	...	0·30	...	...	...	...	...	0·10	...	...
			Ramganj ...	...	...	...	...	...	...	0·01	0·16	0·75	...	0·12	0·31	...	...	...	...	...	0·06	...	...
			Atwari ...	...	...	...	...	...	...	0·06	0·10	0·48	0·10	0·12	...	...	...	...	...	...	...	...	...
			Birganj ...	...	...	...	...	...	...	...	0·26	0·99	0·05	0·27	0·24	...	...	...	...	...	0·05	...	...
			Parbatipur ...	...	...	...	...	...	...	...	0·25	1·16	...	0·18	...	...	...	...	...	...	0·14	...	...
		Jalpaiguri ...	Jalpaiguri	...	...	...	...	...	...	...	0·16	0·30	1·20	0·06	...	...	...	...	...	...	...	...	...
			Alipur Duars	...	...	...	...	...	...	...	0·30	0·44	1·07	0·16	...	...	...	...	...	...	...	...	...
			Falakata ...	...	...	...	...	...	...	...	0·10	0·61	0·96	0·11	...	...	...	...	...	...	...	...	...
			Debiganj ...	...	...	...	...	...	...	...	0·14	0·63	0·17	0·21	...	...	...	...	...	...	...	...	...
			Bhagatpur (*Nagrakatta*).	...	...	...	...	...	...	...	...	...	...	...	...	...	...	...	...	...	...	...	...
			Buxa ...	...	...	...	...	...	...	...	0·17	0·23	0·64	0·15	...	0·16	...	...	...	0·12	...	...	...
			Kalchini ...	...	...	...	...	...	...	...	0·10	0·33	0·68	0·10	...	...	...	...	...	...	...	...	...

in Bengal in March 1905.

21	22	23	24	25	26	27	28	29	30	31	Number of rainy days.	Average number of rainy days.	Total rainfall for the month.	Average rainfall for the month.	Heaviest rainfall during the month.	Total rainfall from 16th Oct. 1904 up to 31st Mar. 1905.	Average rainfall from 16th Oct. up to 31st Mar.	Station.	District.	Division.	Meteorological Division.
0·05	0·45	...	...	...	...	...	...	...	0·39	0·07	4	2·10	1·97	1·37	0·58	5·34	5·04	Kalna ...	Burdwan.	Burdwan.	South-West Bengal.
3·95	0·81	...	...	...	...	0·22	...	...	...	0·18	6	2·16	6·21	1·24	3·96	10·09	4·88	Burdwan			
...	0·48	...	...	...	...	...	...	...	...	...	6	1·87	4·68	1·17	1·81	8·40	4·87	Katwa.			
...	0·57	...	...	...	...	...	...	0·18	...	...	7	1·48	3·89	0·76	0·92	8·73	2·98	Raniganj			
0·11	0·04	...	...	...	...	...	...	...	...	0·28	6	1·40	3·18	0·87	1·53	6·46	3·27	Mankur.			
...	0·02	...	...	...	...	...	...	...	...	..	3	1·38	3·80	0·78	2·15	7·18	4·03	Suri	Birbhum.		
..	...	...	...	...	...	...	...	...	...	0·20	5	1·31	2·90	0·66	1·10	7·25	3·65	Hetampur			
...	0·04	...	...	...	...	...	...	...	...	...	3	1·11	3·57	0·80	2·08	8·12	4·01	Rampur Hat			
...	0·20	...	...	...	...	...	...	...	...	...	7	1·47	3·04	0·98	0·82	5·56	3·78	Bolpur.			
...	0·68	...	...	...	...	...	...	...	...	...	3	1·00	3·48	0·45	2·05	6·84	2·96	Murari			
...	0·11	...	...	...	...	...	...	...	...	0·16	6	0·71	5·32	0·83	2·72	8·25	3·28	Labpur.			
0·34	...	...	...	...	...	0·28	0·06	...	...	...	5	1·76	1·34	1·30	0·34	4·56	4·76	Bankura	Bankura.		
0·65	0·02	...	...	...	...	0·50	0·02	...	...	...	4	2·14	1·83	1·21	0·68	6·28	4·34	Vishnupur			
...	0·26	...	...	...	...	...	...	...	...	0·05	4	1·71	2·25	0·70	1·42	4·44	3·36	Maliara			
0·93	..	...	...	...	...	0·35	0·53	0·11	0·13	...	6	1·80	2·98	1·14	0·93	7·73	4·34	Khatra			
0·70	1·19	...	...	...	...	...	...	...	...	...	5	1·69	2·64	0·92	1·19	6·96	3·45	Indas.			
...	...	...	...	...	1·85	...	...	...	...	0·20	5	1·50	3·85	1·09	1·85	8·23	3·91	Kotalpur.			
0·37	...	...	...	...	...	...	...	...	...	0·10	6	1·69	1·20	0·60	0·37	4·40	2·25	Onda.			
...	0·76	...	...	...	...	...	...	...	...	...	3	1·44	2·34	0·51	0·90	5·56	3·42	Gangajalghati			
0·61	...	...	...	...	...	1·75	...	...	...	...	6	1·80	3·93	1·41	1·75	11·49	4·80	Raipur.			
0·60	1·02	...	...	...	...	0·23	...	...	...	...	5	1·27	2·30	0·78	1·02	5·46	3·79	Sonamukhi.			
...	1·65	...	...	...	0·03	..	...	...	0·37	0·19	7	1·90	5·15	1·10	1·65	10·22	7·69	Contai ..	Midnapore		
0·22	...	...	...	...	0·32	0·23	...	...	...	0·06	6	2·40	2·86	1·51	1·50	9·15	5·39	Tamluk.			
0·15	0·10	...	...	...	...	0·06	...	0·43	0·09	0·02	6	2·50	3·51	1·39	1·63	8·93	5·55	Midnapore.			
1·36	0·10	...	...	...	1·17	...	...	0·15	0·01	...	7	2·29	3·66	1·43	1·36	7·02	4·13	Ghatal			
0·79	...	...	...	...	...	...	...	...	0·08	0·14	5	1·77	1·79	0·68	0·79	7·86	4·22	Kukrahaty.			
2·25	...	...	...	...	...	1·36	...	...	...	...	3	2·00	4·30	1·52	2·85	9·90	4·48	Garhbeta.			
0·29	...	...	...	...	...	0·92	...	0·65	...	0·29	9	1·86	2·93	0·61	0·92	7·69	3·93	Panskura.			
...	0·96	...	...	...	0·30	...	...	...	0·04	0·25	6	1·39	3·06	0·50	0·96	7·41	3·48	Dantan.			
0·20	...	...	...	...	...	...	...	...	...	0·03	4	2·00	2·22	1·18	1·60	6·37	5·22	Serampore	Hooghly.		
0·20	...	...	...	...	...	...	...	...	...	...	4	2·16	2·36	1·58	1·37	6·50	5·29	Hooghly.			
0·59	0·25	...	...	...	...	0·09	...	...	...	0·03	4	2·14	1·66	1·15	0·59	6·61	4·41	*Arambagh* (Jahanabad).			
0·48	...	...	...	...	...	0·04	...	...	...	0·27	8	2·16	3·38	1·46	0·82	7·96	5·40	Howrah ..	Howrah.		
0·96	...	...	...	...	...	0·74	...	...	...	0·50	8	2·16	4·97	1·03	1·80	8·94	4·31	Mohesrekha.			
1·31	...	...	...	...	...	0·36	...	...	...	...	6	1·44	3·96	0·58	1·62	7·52	2·78	Ulubaria.			
2·30	1·30	1·24	...	...	...	...	...	...	...	...	5	?	6·02	?	2·30	9·36	?	*Amta.*			
...	3·25	...	...	...	...	...	...	...	...	0·20	9	1·61	7·67	1·18	3·25	14·61	7·82	Saugor Island	24-Parganas.	Presidency.	
0·65	0·11	...	...	...	...	...	...	...	0·03	0·02	7	2·03	1·88	1·36	0·65	6·33	5·92	Diamond Harbour.			
1·68	...	...	...	...	...	0·34	...	...	...	...	9	?	3·96	?	1·68	8·16	?	*Budge-Budge.*			
0·94	0·03	...	...	...	...	0·51	...	...	...	...	5	1·97	4·02	1·37	1·34	8·06	5·29	Canning Town.			
0·90	0·01	...	...	...	...	0·37	...	...	...	0·27	9	2·09	3·48	1·14	1·07	6·94	4·48	Alipore (Obsy).			
0·25	...	...	...	...	...	...	...	...	...	0·05	4	2·23	2·15	1·23	1·45	6·23	5·35	Barrackpore.			
0·09	...	...	...	...	0·26	0·13	...	...	...	0·21	8	1·97	3·07	1·28	0·90	7·31	5·33	Dum-Dum.			
0·30	...	...	...	...	...	...	...	...	...	0·16	5	2·07	3·17	1·19	2·04	7·98	5·60	Barasat.			
0·19	...	...	...	...	...	...	...	...	...	...	4	2·30	2·01	1·25	0·96	6·24	5·35	Basirhat.			
...	...	0·07	...	...	...	...	...	...	0·12	1·03	6	2·19	3·03	1·44	1·02	7·42	5·25	Ranaghat ...	Nadia		
0·28	0·94	..	...	...	...	...	...	...	...	0·12	8	1·97	4·55	1·11	1·12	9·77	4·63	Krishnagar.			
2·36	1·46	0·04	...	...	...	...	...	...	...	0·45	8	2·29	7·24	1·30	2·36	12·90	5·70	Chuadanga.			
0·10	0·80	..	...	...	...	...	...	...	...	...	6	2·26	3·70	1·78	0·90	7·60	5·44	Meherpur			
.	1·19	...	...	...	...	...	...	...	...	0·06	5	2·45	3·56	1·80	1·30	6·35	5·06	Kushtia.			
...	0·46	...	...	...	...	...	...	...	...	...	4	1·65	3·47	0·93	3·00	6·44	4·45	Kandi ...	Murshidabad.		
...	0·40	...	...	...	...	...	...	...	...	...	4	1·73	3·15	1·05	1·90	6·32	4·23	Berhampore			
...	0·19	0·08	...	...	...	...	...	...	...	...	4	1·58	6·74	0·88	3·40	9·35	3·71	Lalbagh.			
...	1·22	...	...	...	...	...	...	...	...	...	5	1·41	4·73	0·80	3·76	9·03	3·74	Azimganj.			
.	1·07	0·03	...	...	...	...	...	...	...	...	3	1·63	4·32	0·84	2·60	7·78	3·67	Jangipur			
...	0·61	...	...	...	...	...	...	...	...	...	3	1·61	3·80	0·92	2·22	6·79	4·39	Lalgola.			
...	...	0·30	...	...	...	...	...	...	...	...	4	1·87	3·07	0·92	1·29	6·04	4·30	Akriganj.			
...	0·36	...	...	...	...	...	...	...	...	...	5	0·95	3·10	0·67	1·30	4·96	3·31	Patkabari.			
...	...	...	...	...	...	...	...	...	...	...	5	1·66	4·15	1·16	2·12	5·96	4·12	Dumkal.			
0·80	0·12	...	...	...	...	...	...	...	0·82	0·01	6	2·74	3·65	1·78	1·30	8·30	6·46	Narail ...	Jessore		
0·04	0·20	0·22	...	...	...	0·08	...	...	0·45	0·15	7	3·13	2·33	1·38	0·51	7·90	6·73	Jessore.			
1·25	1·36	...	...	...	...	...	...	...	...	0·25	7	2·62	4·50	1·90	1·56	9·81	6·25	Jhenidah.			
0·40	1·32	0·03	...	...	...	...	...	...	...	0·31	8	3·07	4·00	2·10	1·33	10·40	6·00	Magura.			
0·05	0·15	...	...	...	...	...	...	...	0·35	0·05	8	2·35	1·80	1·47	0·30	5·01	5·54	Bangaon.			
0·45	1·89	...	...	...	...	...	...	...	...	...	7	2·00	5·13	1·78	1·25	8·60	5·61	Satkhira ..	Khulna.		
0·61	0·85	...	...	...	0·45	0·31	...	...	0·45	0·02	11	2·31	6·80	1·62	1·41	10·98	6·86	Bagerhat			
0·14	0·84	...	...	...	...	...	...	0·60	0·04	...	9	2·77	6·41	1·79	1·91	12·05	6·38	Khulna			
0·05	...	...	...	...	...	...	...	...	...	...	4	?	4·20	?	1·30	9·11	?	*Kaliganj.*			
0·73	0·02	...	...	...	0·25	...	...	...	...	...	7	1·27	5·85	0·94	2·00	9·42	5·21	Nakipur.			
0·19	0·75	...	...	...	0·05	...	...	...	0·30	...	9	?	5·01	?	1·18	8·25	?	*Dumuria.*			
0·55	...	...	...	0·30	...	...	...	0·48	...	...	9	2·00	4·80	1·18	1·06	5·83	5·67	Rampal.			
0·50	...	...	...	...	...	...	...	...	0·30	0·82	7	?	4·04	?	0·83	7·84	?	*Kalaroa.*			
...	0·41	...	...	...	...	...	...	...	0·07	...	8	?	3·18	?	1·46	6·12	?	*Paikgacha.*			
0·08	..	0·72	...	...	0·05	...	...	...	1·66	0·35	7	?	5·27	?	1·64	10·86	?	*Mollahat.*			
2·50	0·22	0·45	...	...	0·86	0·07	...	0·10	0·83	...	11	?	12·38	?	3·02	16·76	?	*Morelganj.*			
...	1·75	...	...	...	...	...	...	...	...	...	6	?	6·31	?	1·75	9·61	?	*Tala.*			
...	0·36	0·06	...	...	...	...	...	...	...	...	4	1·66	4·70	1·15	2·77	6·91	4·16	Boalia ...	Rajshahi	Rajshahi.	North Bengal.
...	0·60	0·12	...	...	...	...	...	...	...	...	5	1·90	3·35	1·05	2·04	6·76	4·54	Nator.			
...	0·50	...	...	...	...	...	...	...	...	0·06	4	1·33	2·67	1·03	1·40	6·35	3·77	Naugaon.			
...	0·78	0·12	...	...	...	...	...	...	...	..	5	1·73	4·14	1·10	1·70	5·87	3·06	Lalpur.			
...	0·80	...	...	...	...	...	...	...	0·11	...	6	1·33	2·41	0·69	1·96	6·65	2·70	Manda			
...	0·70	...	...	...	...	...	...	...	...	...	5	1·36	2·61	0·69	1·28	6·67	3·16	Mahadebpur.			
...	0·21	0·07	...	...	...	...	...	...	...	...	4	?	0·90	?	0·30	3·35	?	*Tanor.*			
...	0·11	...	...	...	...	...	...	...	...	...	4	?	1·95	?	1·34	6·93	?	*Nithpur* ..	Dinajpur.		
...	0·31	...	...	...	...	...	...	...	...	...	4	?	1·81	?	0·80	7·06	?	*Nawabganj.*			
...	0·16	...	...	...	...	...	...	...	...	...	4	?	1·77	?	1·15	6·80	?	*Gangarampur.*			
...	0·16	...	...	...	...	...	...	...	...	...	4	1·00	1·68	0·80	1·17	6·82	2·64	Churaman.			
...	0·20	...	...	...	...	...	...	...	...	...	5	1·15	1·75	0·88	0·93	7·75	2·38	Raiganj.			
...	0·14	...	...	...	...	...	...	...	...	...	5	1·19	2·02	0·75	1·22	5·57	3·30	Dinajpur.			
...	0·06	0·25	...	...	...	...	...	...	...	...	3	1·16	1·18	0·88	0·75	6·77	2·70	Balurghat			
...	0·06	...	...	...	...	...	...	...	...	...	4	1·40	1·03	1·13	0·72	5·94	2·40	*Thakurgaon.*			
...	0·10	...	...	...	...	...	...	...	...	...	6	?	1·98	?	1·05	6·79	?	*Setabganj.*			
...	0·06	...	...	...	...	...	...	...	...	...	4	?	1·44	?	0·75	11·61	?	*Ranganj.*			
...	2·06	0·08	...	...	...	...	...	...	...	...	6	?	2·87	?	2·06	9·33	?	*Atwari.*			
...	0·12	...	...	...	...	...	...	...	...	...	5	?	1·33	?	0·93	5·30	?	*Birganj.*			
...	0·26	...	...	...	...	...	...	...	...	...	3	?	2·00	?	1·15	5·70	?	*Parbatipur.*			
.	1·65	0·06	...	...	...	...	...	...	...	...	4	2·10	2·01	1·41	1·30	12·61	4·96	Jalpaiguri ...	Jalpaiguri.		
...	1·83	...	...	...	...	...	...	...	...	...	5	2·20	3·00	1·96	1·63	4·24	4·40	Alipur Duars.			
...	0·45	...	...	...	...	...	...	...	...	...	5	2·20	2·42	1·23	0·93	6·60	3·06	Falakata.			
...	0·06	...	...	...	...	...	...	...	...	...	4	1·71	1·31	1·06	0·63	3·97	3·22	Debiganj.			
...	0·30	0·07	0·02	...	...	...	...	...	...	...		3·17		1·63			7·16	Bhagatpur (*Nagrakatta*)			
...	0·88	0·43	...	...	...	...	...	...	...	...	7	4·16	2·50	2·50	0·64	9·13	10·07	*Buxa.*			
...	0·80	0·14	...	...	...	...	...	...	...	...	5	?	1·77	?	0·63	9·63	?	*Kalchini.*			

Table of Rainfall recorded at stations

Meteorological Division	Division	District	Station	1	2	3	4	5	6	7	8	9	10	11	12	13	14	15	16	17	18	19	20
NORTH BENGAL—concluded.	Rajshahi—concluded.	Darjeeling	Siliguri	...	...	...	...	...	...	...	0·05	0·63	0·38	0·06	0·04	...	...	...	...	...	...	...	...
			Darjeeling	...	...	...	...	...	...	...	0·05	0·46	0·11	0·04	...	...	...	...	...	...	...	...	...
			Kalimpong	...	...	...	...	...	...	...	0·02	0·49	0·03	0·05	...	...	...	0·02	...	...	...	...	...
			Mongpoo	...	...	...	...	...	...	...	0·14	0·60	0·55	0·15	0·24	...	...	...	...	...	...	...	...
			Kurseong	...	...	...	...	...	...	0·03	0·22	0·58	0·42	0·05	0·05	...	...	...	0·08	...	...	...	...
			Pedong	...	...	...	...	...	...	...	0·05	0·47	0·02	0·01	...	...	0·03	0·04	0·06	...	...	...	...
		Tibet	Yatung	...	...	...	...	...	...	...	0·30	0·50	0·10	0·50	...	...	...	...	0·15	...	0·10	...	...
		Cooch Behar	Dinhata	...	...	...	...	...	...	...	0·12	0·62	0·40	0·17	0·12	...	...	...	...	...	0·02	...	...
			Cooch Behar	...	...	...	...	...	...	...	0·10	0·46	0·83	0·24	0·02	...	...	...	...	...	...	...	...
			Mekliganj	...	...	...	...	...	...	...	0·18	0·45	0·23	0·11	...	...	...	...	...	...	0·02	...	...
			Mathabhanga	...	...	...	...	...	...	...	0·09	0·59	0·50	0·15	...	...	...	...	...	...	...	...	...
			Fulbari	...	...	...	...	...	...	...	0·11	0·43	1·00	0·27	...	...	...	...	...	...	...	...	...
		Rangpur	Bhawaniganj (*Gaibanda*).	...	0·01	...	...	...	...	...	0·15	1·06	0·08	0·05	0·31	...	...	...	...	...	0·11	...	...
			Rangpur	...	...	...	...	...	...	...	0·20	0·80	...	0·02	0·22	...	...	...	...	...	0·14	...	...
			Peerganj	...	...	...	...	...	...	...	0·14	1·30	...	0·10	0·17	...	...	...	...	...	...	...	...
			Kurigaon	...	...	...	...	...	...	0·22	...	0·30	0·50	0·15	...	...	...	...	...	...	...	...	...
			Gobindganj	...	...	...	...	...	...	...	0·02	1·57	...	0·09	0·25	...	...	...	...	...	0·14	...	...
			Hagdogra (*Nilphamari*).	...	...	...	...	...	...	0·04	0·30	0·46	...	0·22	...	...	...	...	...	...	0·06	...	...
			Ulipur	...	...	...	...	...	...	...	0·19	0·84	0·08	0·15	0·23	...	...	...	...	...	0·31	...	...
			Sunderganj	...	...	...	...	...	0·31	0·44	...	0·31	0·30	...	...	...	...	...	...	...	0·11	...	...
			Saidpur				...	...	...	...	0·07	1·04	...	0·43									
		Bogra	Sherpur	...	0·03	...	...	...	...	...	0·06	1·20	0·11	0·07	0·35	...	...	...	...	...	0·23	...	...
			Nowkhilla	...	...	...	...	...	...	...	0·04	1·05	0·04	0·10	0·14	...	...	...	...	...	0·12	...	...
			Bogra	...	0·02	...	...	...	...	...	0·08	1·07	0·25	0·02	0·16	...	...	...	...	...	0·02	...	...
			Panchbibi	...	...	...	...	...	...	0·54	2·34	...	...	0·16	...	...	...	...	...	...	...	...	...
		Pabna	Pabna	...	0·07	...	...	...	...	0·01	0·22	0·84	0·49	...	0·21	...	...	...	...	...	...	...	...
			Sirajganj	...	0·25	...	...	...	...	...	0·10	1·06	0·27	...	0·28	...	...	...	...	...	...	...	...
EAST BENGAL.	Dacca.	Dacca	Munshiganj	...	0·44	...	...	...	...	...	...	0·36	...	...	1·32	...	...	...	...	...	...	...	...
			Dacca	...	0·43	...	...	...	...	0·08	0·22	0·31	0·19	...	0·37	0·08	...	...	...	...	0·08	...	...
			Narayanganj	...	1·07	...	...	...	...	...	0·50	0·25	0·09	...	1·62	...	...	...	...	...	...	...	...
			Manikganj	...	0·15	...	...	...	...	...	0·30	0·29	0·41	...	...	...	...	...	...	...	0·05	...	...
			Jaydebpur	...	...	...	...	...	...	...	0·40	0·06	0·06	...	0·06	...	...	...	...	...	0·15	...	...
		Mymensingh	Kishorganj		0·08	...	...	...	...	...	0·56	0·80	0·86	...	0·09	...	...	...	...	...	0·58	...	...
			Atia (*Tangail*)		0·07	...	...	...	0·42	...	...	1·02	0·31	...	...	...	...	...	...	...	...	...	...
			Mymensingh	...	...	...	...	...	...	...	0·05	0·50	0·23	...	0·42	...	...	...	...	...	0·36	...	...
			Jamalpur	...	...	...	...	...	...	...	...	1·25	...	0·13	...	...	...	...	...	...	0·46	...	...
			Netrakona	...	...	...	...	...	...	...	0·05	0·36	0·08	...	0·23	...	...	...	...	...	0·12	...	...
			Subarnakhali	Not recorded																			
			Durgapur	...	...	...	...	...	...	...	0·08	1·03	...	...	0·01	...	...	...	...	...	1·08	...	...
			Sherpur Town	...	...	...	...	...	...	...	...	2·30	0·27	...	0·41	...	...	...	...	...	0·21	...	...
			Diwanganj	0·07	...	0·25	...	...	...	0·11	1·78	...	0·09	0·67	...	...	...	...	...	...	...	...	...
			Nalitabari	...	...	...	...	...	...	0·02	2·02	0·62	...	...	0·34	...	...	...	...	0·11	...	...	...
		Faridpur	Madaripur	...	0·49	...	...	...	...	...	0·14	0·15	...	0·11	0·12	...	...	...	...	...	...	...	3·15
			Faridpur	...	0·25	...	...	...	...	0·05	0·02	0·32	0·40	...	0·99	0·02	...	...	...	...	...	...	...
			Goalundo	...	0·41	...	...	...	...	0·07	0·26	0·52	0·35	...	0·74	...	...	...	...	...	...	...	0·05
		Backergunge	Patuakhali	...	1·55	0·64	...	...	...	...	...	...	0·30	...	1·69	1·07	...	...	...	...	0·13	...	1·08
			Pirojpur	...	0·77	0·13	...	...	...	...	...	...	1·18	...	0·50	0·05	...	...	...	0·07	0·05	0·38	0·51
			Barisal	...	0·76	...	...	...	...	...	...	...	0·13	...	0·39	0·44	...	...	...	0·04	0·23	...	0·62
			Gaurnadi	...	1·50	...	...	...	...	...	...	...	0·71	...	1·11	0·18	...	...	...	...	...	...	...
			Bhola	...	0·77	0·36	...	...	...	...	...	...	0·06	...	0·32	0·34	...	...	...	0·14	0·28	...	0·29
			Daulatkhan	...	0·28	1·14	...	...	...	...	...	...	0·03	...	0·57	0·58	...	...	...	...	1·38	...	0·30
			Hauphal	...	0·06	0·60	...	...	...	...	...	...	0·45	...	1·04	0·96	...	...	...	0·62	0·53	...	0·63
	Chittagong.	Hill Tippera	Agartala	...	...	...	...	...	...	...	...	0·50	...	...	0·76	...	1·50	...	...	...	...	0·10	0·50
		Tippera	Comilla	...	0·07	...	...	...	...	...	...	...	0·04	...	0·82	0·30	...	...	...	0·37	0·05	...	...
			Chandpur	...	1·17	...	...	...	...	...	...	...	0·21	...	0·17	1·39	...	...	...	0·11	0·36	...	...
			Brahmanbaria		0·36	...	...	...	...	...	0·15	0·25	0·22	...	0·48	...	0·80	...	...	...	0·12	...	...
			Ramchandrapur.	...	0·23	...	...	...	...	...	0·28	0·30	...	...	0·61	...	...	...	...	...	0·70	...	...
			Nasirnagar	...	0·40	...	...	...	...	...	0·40	0·45	0·15	...	...	...	...	...	...	...	1·10	0·75	0·36
			Daudkandi	...	...	0·25	...	...	...	...	...	0·10	0·36	...	0·92	0·56	...	...	...	...	0·01	...	...
			Kasba	...	0·14	...	...	...	...	...	0·04	0·34	0·55	...	0·20	0·06	0·01	...	...	...	0·02	...	...
			Laksam	0·30	...	...	...	...	...	...	...	...	...	...	1·90	0·23	...	...	...	...	0·60	...	...
		Noakhali	Noakhali	...	0·61	0·07	...	...	...	...	...	...	0·25	...	1·10	0·46	...	...	...	...	0·18	...	0·64
			Fenny	...	0·22	0·24	...	...	...	...	...	...	0·41	...	0·80	0·28	...	...	0·11	0·08	1·30	...	0·41
			Harishpur	...	0·30	...	...	...	...	...	...	...	0·19	...	3·18	1·85	0·05	...	...	...	0·30	...	...
			Ramganj	...	0·50	...	...	...	...	...	...	...	0·36	...	0·40	0·50	...	...	...	...	0·32	...	0·43
			Chhagalnaya	...	0·12	0·30	...	...	...	...	...	...	0·56	...	3·15	0·65	...	...	0·30	0·15	1·05	...	0·46
			Hatya	...	1·10	0·12	...	...	...	...	...	0·09	...	...	1·29	0·40	...	...	...	...	0·76	...	0·95
			Lakhmipur																				
		Chittagong	Cox's Bazar	...	...	...	...	...	...	...	...	...	...	0·06	0·19	3·01	...	...	...	...	...	0·27	2·35
			Chittagong	...	0·16	...	...	...	...	...	...	...	1·96	0·35	4·15	2·56	...	...	...	0·08	1·33	...	0·30
			Kutubdia	...	...	...	...	...	...	...	...	...	1·75	1·85	3·75	...	...	0·15	...	0·73	0·05	...	3·30
			Satkania	...	...	...	...	...	...	...	...	...	...	2·06	4·75	2·94	...	...	...	...	1·68	...	1·17
			Kodala	0·46	...	...	...	...	...	...	...	0·07	0·42	5·31	3·30	...	...	...	1·10	0·98	0·96	2·85	3·50
			Fenua	0·61	0·02	...	...	...	...	...	...	1·39	0·01	3·16	1·74	0·06	...	...	0·10	0·73	0·65	0·08	1·45
			Mirsarai	...	0·10	0·10	...	...	...	...	...	...	1·19	...	0·49	0·35	...	...	1·07	...	0·15	...	1·45
		Chittagong Hill Tracts.	Rangamati	...	0·36	...	...	...	...	...	...	...	0·30	...	4·76	1·75	...	...	...	0·08	2·30	0·35	0·65
			Bandarban	0·26	...	...	...	...	...	...	...	...	0·05	1·20	2·85	5·00	...	...	...	0·51	1·40	0·09	0·76
			Barkal	...	...	...	...	...	...	...	...	...	0·05	...	3·15	1·30	0·30	...	...	1·22	1·15	2·37	2·30
BIHAR.	Patna.	Patna	Patna	0·02	0·16	...	...	...	...	0·15	0·19	2·04	...	0·19	...	...	...	...	...	...	...	...	...
			Dinapore	...	...	...	...	...	...	0·44	1·34	...	0·19	...	...	...	...	...	...	...	...	...	...
			Bihar	...	...	...	...	...	...	0·05	0·30	0·50	...	0·15	...	...	...	...	...	...	...	...	...
			Bara	...	...	...	...	...	...	0·25	0·10	1·11	...	0·18	...	...	...	...	...	...	...	...	...
			Bikram	...	...	...	...	...	...	0·27	0·16	0·51	...	0·23	...	...	...	...	...	...	...	...	...
			Hilsa	...	...	...	...	...	...	0·25	0·02	0·30	...	0·20	...	...	...	...	...	...	...	...	...
			Islampur	...	...	...	...	...	...	0·28	0·22	0·06	...	0·30	...	...	...	...	...	...	...	...	...
			Asthawan	...	...	...	...	...	...	0·40	0·27	0·56	...	0·16	...	...	...	...	...	...	...	...	...
		Gaya	Aurangabad	0·02	0·04	...	...	...	...	0·40	0·47	0·29	...	0·05	...	...	...	...	...	...	...	...	...
			Gaya	...	...	...	...	...	...	0·37	0·51	0·46	...	...	0·06	...	...	...	...	...	...	...	...
			Nawada	0·01	...	...	...	...	...	0·23	0·23	1·24	...	0·05	0·01	...	...	...	...	...	...	...	...
			Jahanabad	...	...	...	...	...	...	0·28	0·13	0·79	...	0·12	0·01	...	...	...	...	...	...	...	...
			Arwal	...	0·14	...	...	...	...	0·44	0·13	0·77	...	0·13	...	...	...	...	...	...	...	...	...
			Daudnagar	0·01	...	...	...	...	...	0·42	0·05	0·26	...	0·07	0·01	...	...	...	...	...	...	...	...
			Sherghati	0·01	0·05	...	...	...	...	0·45	0·48	0·30	...	...	0·04	...	...	...	...	...	...	...	...
			Rajauli	...	0·26	...	...	...	0·02	0·06	0·45	1·01	...	...	...	...	...	...	...	...	...	...	...
			Pakri Barawan	...	...	...	...	...	...	...	...	...	...	...	...	...	...	...	...	...	...	...	...
			Deo	0·37	0·07	...	...	...	...	0·40	0·34	0·72	...	...	...	...	...	...	...	...	...	...	...
			Nabinagar	...	...	...	...	...	...	0·48	0·48	0·15	...	...	...	...	...	...	...	...	...	...	...

in Bengal in March 1905—*continued.*

21	22	23	24	25	26	27	28	29	30	31	Number of rainy days.	Average number of rainy days.	Total rainfall for the month.	Average rainfall for the month.	Heaviest rainfall during the month.	Total rainfall from 16th Oct. 1904 up to 31st March 1905.	Average rainfall from 16th Oct. up to 31st March.	Station.	District.	Division.	Meteorological Division.
...	0.54	0.03	...	...	...	...	...	...	...	...	3	2.06	1.09	1.08	0.65	11.11	3.88	Siliguri	Darjeeling.	Rajshahi—concluded.	NORTH BENGAL—concluded.
...	0.35	0.07	...	...	0.03	...	...	...	...	...	3	3.35	1.11	2.01	0.46	10.13	7.17	Darjeeling.			
...	0.43	...	0.30	...	...	...	...	...	...	...	3	2.80	1.33	1.41	0.49	10.52	4.30	Kalimpong.			
...	0.40	0.08	0.04	...	...	...	...	0.04	...	...	6	3.63	2.07	1.95	0.60	14.50	5.38	Mongpoo.			
...	0.40	0.03	...	...	...	...	...	...	...	...	4	3.00	1.94	1.47	0.66	13.75	5.31	Kurseong.			
...	0.49	0.06	0.56	...	...	...	...	...	...	...	3	5.14	1.80	2.64	0.56	11.62	6.80	Pedong.			
...	0.55	0.20	...	...	...	...	0.15	0.14	...	...	10	6.83	2.59	2.33	0.55	8.14	5.54	Yatung ..	Tibet.		
...	0.36	...	...	...	...	...	...	...	...	...	6	2.68	1.71	1.76	0.62	7.90	4.41	Dinhatta	Cooch Behar.		
...	0.92	0.02	...	...	...	...	...	...	...	...	5	2.41	2.59	1.06	0.92	9.69	4.15	Cooch Behar			
...	1.28	...	...	...	...	...	...	...	...	...	5	2.23	2.27	1.43	1.28	11.46	3.84	Mekliganj.			
...	1.07	0.03	...	...	...	...	...	...	...	...	4	2.50	2.34	1.91	1.07	8.87	4.50	Mathabhanga			
...	0.78	0.14	...	...	...	...	...	...	...	...	6	2.43	2.72	1.57	1.00	8.49	3.76	Fulbari.			
...	0.40	0.24	...	...	...	0.21	0.03	...	0.01	...	7	1.00	2.67	1.24	1.06	8.54	4.12	Bhawaniganj (*Gaibanda*	Rangpur.		
...	...	...	...	...	...	...	...	...	...	...	4	1.68	1.48	1.16	0.90	5.31	4.43	Rangpur.			
...	...	...	...	...	...	0.15	...	...	...	...	5	0.87	1.66	0.36	1.30	8.16	2.58	Peerganj.			
...	0.52	...	...	...	...	...	...	...	...	...	5	2.12	1.90	1.63	0.52	9.09	4.51	Kurigram.			
...	0.40	...	...	...	...	...	...	...	...	...	4	1.29	2.57	0.56	1.57	6.85	3.31	Gobindganj.			
...	...	...	...	...	...	...	...	...	...	...	3	1.64	1.08	1.21	0.46	6.35	3.69	Bardorra. (*Nilphamari*).			
...	0.43	...	...	...	...	...	...	...	0.06	...	6	2.00	2.13	1.20	0.84	9.69	2.98	Ulipur			
...	0.55	...	...	...	...	...	...	...	...	...	6	1.57	2.11	0.86	0.55	6.06	3.50	Sunderganj.			
												?		?	1.04	?	?	*Saidpur.*			
...	1.14	0.50	...	...	...	...	...	...	...	...	6	2.33	4.42	1.15	1.20	6.56	4.95	Sherpur ...	Bogra.		
...	1.23	0.25	...	...	...	...	...	...	...	...	6	2.00	3.57	1.04	1.23	5.93	4.84	Nowkhilla.			
...	0.63	0.01	...	...	...	...	...	...	...	...	5	1.74	2.93	0.98	1.07	5.09	5.61	Bogra			
...	0.73	...	...	...	...	...	...	...	...	...	4	1.42	3.67	0.91	2.24	8.69	4.73	Panchbibi.			
...	0.92	...	...	...	0.03	...	...	...	...	0.15	6	2.58	2.94	1.50	0.92	6.03	5.10	Pabna ...	Pabna.		
...	1.02	0.06	...	...	...	...	...	0.04	...	...	6	2.30	3.12	1.26	1.06	5.40	4.99	Sirajganj.			
0.18	2.19	1.89	...	...	0.11	...	...	...	...	0.41	8	4.18	7.33	2.22	2.19	11.19	8.28	Munshiganj ...	Dacca.	Dacca.	EAST BENGAL.
0.02	2.32	0.04	...	...	...	...	...	...	...	0.12	7	3.55	4.16	2.59	2.32	7.96	6.55	Dacca			
0.28	2.30	0.64	...	[illegible]	0.22	...	...	...	...	0.22	9	3.18	7.14	2.33	2.30	11.97	7.25	Narayanganj.			
...	1.55	...	...	...	0.07	...	...	...	...	0.06	6	2.79	3.71	1.56	1.55	7.29	6.18	Manikganj.			
0.20	1.15	...	...	...	...	...	...	...	0.02	...	7	3.33	4.15	2.13	1.15	7.78	6.11	Jaydebpur.			
...	0.61	0.12	...	...	0.29	...	...	...	...	...	8	4.40	3.67	2.57	0.80	7.38	6.44	Kishorganj ...	Mymensingh.		
...	1.29	...	...	...	0.05	...	...	...	...	...	4	2.13	3.16	1.36	1.29	6.26	5.06	Atia (*Tangail*)			
...	0.34	0.91	...	...	...	0.30	0.17	...	...	...	8	3.52	3.93	2.20	0.93	7.12	6.75	Mymensingh			
...	0.20	0.32	...	...	...	...	...	...	...	...	5	2.31	2.35	1.36	1.25	5.92	5.22	Jamalpur.			
...	0.20	0.18	...	...	...	0.03	0.04	...	...	...	6	3.89	1.89	2.91	0.68	4.81	7.56	Netrakona.			
Not recorded.												2.07		1.42			4.36	Subarnakhali.			
...	0.42	0.75	...	...	...	0.21	0.53	...	...	...	7	3.13	4.46	2.65	1.06	8.79	5.81	Durgapur.			
...	0.31	0.16	...	...	...	...	...	...	...	...	6	2.17	4.87	1.81	3.50	8.49	5.13	Sherpur Town.			
0.65	0.82	...	...	...	...	...	...	...	...	...	5	1.87	4.15	1.16	1.75	5.15	3.90	Diwanganj.			
0.46	0.15	...	...	...	...	0.25	...	...	...	...	6	?	3.46	?	2.07	7.79	?	*Nalitabari.*			
0.30	0.80	...	...	...	0.35	...	...	0.38	0.34	...	11	3.73	6.67	2.52	3.15	11.98	6.82	Madaripur ...	Faridpur.		
0.70	1.42	0.05	...	...	...	0.03	...	...	...	0.06	7	3.50	4.08	2.33	1.42	9.48	6.99	Faridpur.			
2.72	0.01	...	...	...	...	...	...	...	...	0.02	7	3.00	6.00	1.93	2.72	9.53	6.26	Goalundo.			
1.31	0.16	0.37	...	...	0.86	0.08	...	...	0.45	0.06	11	2.39	8.93	1.40	1.69	13.72	7.69	Patuakhali ...	Backergunge.		
...	0.36	0.13	...	0.08	0.19	...	...	0.47	0.01	...	13	3.40	6.49	1.29	1.18	13.64	6.76	Pirojpur.			
0.47	0.80	0.09	...	...	0.16	0.10	...	0.16	0.24	0.74	13	3.03	5.17	2.09	0.76	12.77	7.40	Barisal			
3.65	...	...	...	...	0.32	0.31	...	...	...	0.66	8	2.73	6.44	2.02	3.65	12.97	6.56	Gaurnadi			
2.71	0.44	0.26	...	...	1.65	0.07	...	...	0.03	2.39	12	3.21	10.68	2.09	2.71	18.00	7.29	Bhola			
1.04	0.82	...	...	...	0.46	...	...	...	...	1.49	10	2.00	5.01	1.17	1.40	13.73	7.27	Daulatkhan.			
0.41	0.23	0.29	...	...	...	...	...	...	0.28	0.40	13	2.00	7.81	1.41	1.04	14.06	7.35	Bauphal.			
0.60	1.80	0.06	...	...	...	...	...	...	...	0.56	8	4.74	5.88	4.11	1.80	9.16	9.72	Agartala ...	Hill Tippera.	Chittagong.	
0.59	2.35	0.07	...	...	...	...	...	...	...	0.10	6	3.93	5.18	3.74	2.35	9.79	7.66	Comilla ...	Tippera.		
2.56	0.19	0.87	...	...	...	...	...	...	...	1.45	10	3.50	7.12	2.91	2.56	12.46	7.64	Chandpur			
0.05	3.18	...	...	...	...	...	...	...	...	...	8	4.13	5.60	4.01	3.18	9.70	8.84	Brahmanbaria.			
...	2.19	...	...	...	...	...	...	...	...	...	6	3.12	4.33	2.15	2.19	7.82	6.63	Ramchandrapur.			
...	...	...	...	...	...	0.20	...	0.90	...	...	9	4.40	5.20	3.37	1.10	9.30	7.32	Nasirnagar.			
0.05	1.57	0.62	...	...	...	...	...	...	...	0.36	7	3.12	5.10	1.75	1.57	8.84	5.01	Daudkandi.			
0.10	1.24	...	...	...	...	...	...	...	...	0.26	7	3.13	3.22	3.10	1.24	6.25	7.01	Kasba.			
0.46	0.61	0.60	...	...	...	...	...	...	...	1.06	8	2.67	5.36	2.32	1.90	12.75	6.90	Laksam.			
3.67	0.27	1.00	...	...	...	...	...	...	...	0.58	10	2.96	9.23	2.75	3.67	17.00	9.01	Noakhali ...	Noakhali.		
1.66	0.70	0.04	...	...	...	...	...	...	...	2.47	11	4.29	8.44	3.39	2.47	15.39	10.05	Fenny			
5.20	0.36	0.45	...	...	...	...	...	...	...	0.57	9	2.07	13.81	2.29	5.20	24.45	9.54	Harishpur.			
3.00	...	0.62	...	...	...	...	...	...	...	0.78	9	3.33	7.73	3.16	3.00		6.30	Ramganj			
0.45	0.56	0.10	...	...	...	...	...	...	...	2.06	13	?	9.26	?	2.06	8.96	?	*Chhagalnaiya.*			
2.80	0.41	...	...	...	0.27	...	...	...	...	0.90	10	?	8.86	?	2.30	11.96	?	*Hatya.*			
												?		?		16.06	?	*Lakhimpur.*			
2.14	1.36	0.62	...	...	...	...	...	...	...	0.13	8	1.93	10.10	1.45	3.01	16.13	8.92	Cox's Bazar	Chittagong.		
3.45	0.28	0.12	...	...	...	...	...	...	...	0.20	11	3.77	14.86	2.14	4.15	17.96	8.65	Chittagong.			
3.30	2.11	...	...	...	...	...	...	...	...	...	8	1.87	23.58	1.52	3.75	27.74	9.71	Kutubdia.			
3.03	0.71	...	...	...	...	...	...	...	...	0.38	8	1.71	15.96	1.55	4.75	19.11	7.82	Satkania.			
0.21	0.81	...	...	...	...	...	...	...	0.38	1.05	12	3.29	12.38	2.87	5.31	21.33	9.33	Kodala.			
0.58	0.72	...	...	...	...	...	...	...	0.32	0.44	13	3.13	12.90	3.63	3.16	18.11	10.90	Fenoa.			
1.78	0.56	2.11	...	...	...	...	...	...	...	0.85	13	3.00	10.16	2.81	2.11	22.05	9.38	Mirsarai.			
1.15	0.80	0.56	...	...	...	...	...	...	...	1.62	11	3.66	16.06	3.10	4.74	19.51	9.28	Rangamati ...	Chittagong Hill Tracts.		
4.68	0.72	0.61	...	...	...	...	...	...	...	0.93	11	2.90	20.42	2.67	6.00	22.87	9.11	Bandarban.			
1.21	1.05	0.07	...	...	...	...	...	0.15	...	1.45	12	?	16.84	?	3.12	20.97	?	*Barkal.*			
...	...	...	...	...	...	...	...	...	0.09	...	5	0.74	2.84	0.35	3.04	6.38	3.12	Patna	Patna.	Patna.	BIHAR.
...	...	...	...	...	...	...	...	...	...	...	3	0.77	2.27	0.35	1.66	7.43	2.96	Dinapore			
...	...	...	...	...	...	...	...	...	0.08	...	4	0.84	1.44	0.36	0.80	[illegible]	3.13	Bihar			
...	...	...	...	...	...	...	...	...	...	...	4	0.97	1.84	0.34	1.11	[illegible]	2.70	Barh			
...	...	...	...	...	...	...	...	...	...	...	4	0.71	0.97	0.32	0.32	[illegible]	3.17	Bikram.			
...	...	...	...	...	...	...	...	...	...	...	4	0.98	1.15	0.48	0.5[illegible]	4.98	3.37	Hilsa.			
...	...	...	...	...	...	...	...	...	...	...	4	?	1.03	?	0.[illegible]8	4.55	?	*Islampur.*			
...	...	...	...	...	...	...	...	...	...	...	4	?	1.38	?	0.56	4.47	?	*Atthawan.*			
...	...	...	...	...	...	...	0.04	[illegible]	...	...	3	1.03	1.40	0.39	0.40	6.04	2.83	Aurangabad	Gaya.		
...	...	...	...	...	...	...	...	...	0.09	...	3	1.03	1.32	0.45	0.51	5.76	3.23	Gaya.			
...	...	...	...	...	...	...	...	...	0.04	...	3	0.83	1.06	0.42	1.34	6.98	2.88	Nawada.			
...	...	...	...	...	...	...	...	...	...	...	4	0.86	1.58	0.34	0.79	5.36	2.50	Jahanabad.			
...	...	...	...	...	...	...	...	...	0.35	...	6	0.83	2.30	0.41	0.97	5.49	3.21	Arwal.			
...	...	...	...	...	...	...	...	...	...	0.01	2	0.60	0.73	0.30	0.38	4.17	2.13	Daudnagar.			
...	...	...	...	...	...	...	...	0.15	0.07	...	4	0.93	1.33	0.84	0.43	5.38	3.07	Sherghati.			
...	...	...	...	...	...	...	...	...	...	...	3	0.93	1.55	0.63	0.45	4.70	3.24	Rajauli.			
												0.90		0.44			3.46	Pakri Barawan.			
...	...	...	...	...	...	...	...	...	...	...	5	?	2.30	?		3.75	?	*Deo.*			
...	...	...	...	...	...	...	0.70	0.16	...	...	5	?	2.16	?	0.63	5.40	?	*Nabinagar.*			

Table of Rainfall recorded at stations

Meteorological Division.	Division.	District.	Station.	1	2	3	4	5	6	7	8	9	10	11	12	13	14	15	16	17	18	19	20
BIHAR—concluded.	Patna—concluded.	Shahabad ..	Buxar ..	0·02	...	...	...	...	...	0·15	0·30	0·37	...	0·29	0·03	...	...	...	...	...	...	...	...
			Dehri ..	0·26	...	...	...	...	...	0·25	0·23	0·02	...	0·03	0·02	...	...	...	...	...	...	...	...
			Shabhua ..	...	...	...	...	...	...	0·45	0·37	...	...	0·05	...	...	...	...	...	...	...	...	...
			Nasarain ..	0·11	...	...	...	...	...	0·43	0·11	...	...	0·08	...	...	...	...	...	...	...	...	...
			Arrah ...	0·04	0·30	...	...	...	...	0·08	0·31	0·94	...	0·26	0·03	...	...	...	...	...	...	...	...
			Mohanea ...													...	...	...	...	...	...	...	...
			Agraon	...	...	...	...	...	...	0·45	0·27	0·63	...	0·19	...	...	...	...	...	...	...	...	...
			Ramgar ...	...	...	...	...								...	...	...	...	...	...	...	...	...
			Koath ..	...	...	...	...	...	...	0·34	0·24	0·27	...	0·17	...	...	...	...	...	...	...	...	...
			Sikroul ...	0·07	...	...	...	...	...	0·14	0·14	0·15	...	0·17	0·02	...	...	...	...	...	...	...	...
			Bassowan ..	...	...	...	...	...	...	0·30	0·26	0·10	...	0·07	0·01	...	...	...	...	...	...	...	...
			Monaharpur ..	...	0·04	...	...	...	...	0·20	...	...	0·19	0·18	...	...	...	...	...	...	...	...	...
		Saran ...	Gopalganj ...	...	...	...	...	...	...	0·08	0·15	0·23	...	0·04	...	...	...	...	...	...	...	...	...
			Siwan ...	...	...	...	...	...	...	0·21	0·23	0·25	...	0·12	...	...	...	...	...	...	...	...	...
			Ekma ...	...	...	...	...	...	...	...	0·30	0·55	...	0·12	0·05	...	...	...	...	...	...	...	...
			Chapra ..	...	...	...	...	...	...	0·63	0·21	0·40	...	0·16	0·05	...	...	...	...	...	...	...	...
			Hathwa ...	0·01	...	...	...	...	...	0·09	0·16	0·41	...	0·05	...	...	...	...	...	...	...	...	...
			Amnor .	...	...	...	...	...	...	...	...	0·31	0·50	0·18	...	...	...	...	...	...	...	...	...
			Basantpur ...	...	...	...	...	...	...	...	0·18	0·11	0·25	0·11	...	...	...	...	...	...	...	...	...
			Darauli ...	...	...	...	...	...	...	0·21	0·22	0·19	...	0·08	...	...	...	...	...	...	...	...	...
			Bhorah ...	...	...	...	...	...	...	...	0·23	0·25	...	...	...	...	...	...	...	...	0·05	...	...
			Sripur ...	...	...	...	...	...	...	0·20	0·06	0·18	...	0·03	...	...	...	...	...	...	...	...	...
		Champaran ..	Motihari ...	...	0·03	...	...	...	...	0·01	0·15	0·31	...	...	...	...	...	...	...	...	...	...	...
			Bettiah ...	...	...	...	...	...	...	...	0·48	...	...	...	...	...	...	...	...	...	...	...	...
			Bagaha ...	...	0·14	...	...	...	...	0·12	...	0·32	...	0·01	...	...	...	...	...	...	...	...	...
			Burnarwa ...	...	0·19	...	...	...	...	...	0·07	0·11	0·19	0·02	...	...	...	...	...	0·02	...	...	...
			Ramnagar ...	...	...	...	...	...	...	0·07	...	0·33	...	...	...	...	...	...	...	...	...	...	...
			Lautarpur ...	...	...	...	...	...	...	0·14	...	0·19	...	...	...	...	...	...	...	...	...	...	...
			Kissoriah ...	...	...	...	...	...	...	0·20	0·12	0·34	...	0·10	...	...	...	...	...	...	...	...	...
			Dhaka ...	...	...	...	...	...	...	...	...	0·30	...	...	...	...	...	...	...	...	...	...	...
		Muzaffarpur...	Sitamarhi ..	...	...	...	...	...	...	0·04	0·19	0·33	...	0·01	...	...	...	...	...	...	...	...	...
			Muzaffarpur ..	...	...	...	...	...	...	0·01	0·20	0·61	...	0·24	...	...	...	...	...	...	...	...	...
			Hajipur ...	0·02	0·37	...	...	...	...	0·18	0·11	0·75	...	0·13	0·05	...	...	...	...	...	...	...	...
			Paru ...	...	...	...	...	...	...	...	0·31	0·51	...	0·30	...	...	...	...	...	...	...	...	...
			Mahua ...	...	0·06	...	...	...	...	0·07	0·11	0·36	...	0·12	0·05	...	...	...	...	...	...	...	...
			Shiuhar ...	...	...	...	...	...	...	0·10	...	0·30	...	...	...	...	...	...	...	...	...	...	...
			Pupri ...	...	...	...	...	...	...	...	0·16	0·25	...	...	...	...	...	...	...	...	...	...	...
		Darbhanga	Tajpur (Samastipur).	...	...	...	...	...	...	0·09	0·11	0·44	...	0·18	...	...	...	...	...	...	0·03	...	...
			Darbhanga ...	...	...	...	...	...	...	0·06	0·22	0·66	0·01	0·20	...	...	...	...	...	...	...	...	...
			Madhubani ...	...	...	...	...	...	...	0·02	0·22	0·36	...	0·06	...	...	...	...	...	...	...	...	...
			Bahera ...	...	...	...	...	...	...	0·06	0·16	0·40	0·01	0·25	...	...	...	...	...	...	0·02	...	...
			Roserha ...	...	0·07	...	...	...	...	...	0·25	0·21	...	0·24	...	...	...	...	...	...	...	...	...
			Khutonia ...	...	...	...	...	...	...	0·02	0·19	0·26	...	...	...	...	...	...	...	...	...	...	...
			Ladania ...	...	...	...	...	...	...	0·18	0·37	...	...	...	...	...	...	...	...	...	...	...	...
			Laukahi ...																				
	Bhagalpur.	Monghyr ...	Begusarai ...	...	...	...	...	...	...	0·28	0·37	1·73	0·01	0·14	0·05	...	...	...	...	...	...	...	...
			Monghyr ...	...	0·01	...	...	...	...	0·14	0·17	1·42	...	0·11	0·05	...	...	...	...	...	...	...	...
			Jamui ...	...	0·03	...	...	...	...	0·09	0·23	1·73	...	0·06	...	...	...	...	...	...	...	...	...
			Gogri ...	...	...	...	...	...	...	...	0·30	0·80	...	0·16	...	...	...	...	...	...	...	...	...
			Jamalpur ...	0·08	...	...	...	...	...	...	0·28	1·33	...	0·16	0·04	...	...	...	...	...	...	...	...
			Shaikhpura ...	...	...	...	...	...	...	0·23	[illegible]	1·40	...	0·18	...	...	...	...	...	...	...	...	...
			Chakai Bamda	...	...	...	...	...	...	0·05	0·22	2·16	0·01	0·03	0·01	...	...	...	...	...	0·42	...	...
			Chuprean ...	...	...	...	...	...	...	0·09	0·17	0·49	...	0·27	...	...	...	...	...	...	0·09	...	...
			Gidhaur ...	0·10	...	...	...	...	...	0·14	0·27	1·50	...	...	0·10	...	...	...	...	...	...	...	...
			Kharagpur ...	...	...	...	...	...	...	...	0·40	1·27	...	...	...	...	...	...	...	...	...	...	...
		Bhagalpur ...	Madhipura	...	...	...	...	...	...	0·20	0·28	0·40	...	0·27	...	...	...	...	...	...	0·02	...	...
			Bangaon (Sylabad)	...	...	...	...	...	...	...	...	0·60	...	0·26	...	...	...	...	...	...	...	...	...
			Supaul ...																				
			Pratapganj ...	...	...	...	...	...	...	0·05	...	0·57	...	0·25	0·08	...	...	...	...	...	...	...	...
			Bhagalpur ...	...	...	...	...	...	...	0·12	0·37	...	...	0·06	...	...	...	...	...	...	...	...	...
			Banka ...	0·11	...	...	...	...	...	0·01	0·14	1·15	...	0·15	0·04	...	...	...	...	...	0·04	...	...
			Colgong ...	...	...	...	...	...	...	0·02	0·21	2·05	...	...	...	...	...	...	...	...	...	...	...
			Bausi ...	...	...	...	...	...	...	...	0·07	1·03	...	0·13	...	...	...	...	...	...	...	...	...
				...	...	...	...	...	...	...	0·19	1·96	...	...	0·03	...	...	...	...	...	0·24	...	...
		Purnea ...	Kishanganj ...							...	0·20	0·47	...	0·13	...	...	...	...	...	...	...	...	...
			Araria ...	...	...	...	...	...	...	...	0·22	0·30	...	0·16	...	...	...	...	...	...	...	...	...
			Purnea ...	...	...	...	...	...	...	...	0·26	0·54	...	0·17	0·21	...	...	...	...	...	0·06	...	...
			Gondwara (*Korah*).	...	...	...	...	...	0·02	0·14	0·32	...	...	0·14	...	...	...	...	...	...	...	...	...
			Barsoe ...																				
			Forbesganj ...	...	...	...	...	...	...	...	...	0·15	...	0·15	...	...	...	...	...	...	...	...	...
			Kaliganj ...	...	...	...	...	...	...	0·30	...	...	...	...	...	...	...	...	...	...	...	...	...
		Malda .	Malda ...	...	...	...	...	...	...	...	0·20	1·22	...	0·06	0·32	...	...	...	...	...	...	...	...
			Chanchal ...	...	...	...	...	...	...	...	0·20	0·96	...	0·15	...	...	...	...	...	...	0·06	...	...
			Gajol ...	...	...	...	...	...	...	...	0·25	1·04	...	0·11	...	...	...	...	...	...	...	...	...
			Sibganj ...	...	...	...	...	...	...	...	0·16	1·00	...	...	...	...	...	...	...	...	0·21	...	...
			Gomastapur ...	...	0·18	...	...	...	...	...	0·14	1·36	0·05	...	0·06	...	...	...	...	...	0·35	...	...
			Nawabganj ...	0·10	...	...	...	...	...	...	0·17	2·30	...	...	...	...	...	...	...	...	0·37	...	...
		Sonthal Parganas	Rajmahal ...	...	...	...	...	...	...	...	0·20	1·33	...	0·05	0·31	...	...	...	...	...	0·04	...	...
			Godda ...	...	...	...	...	...	...	...	0·26	2·00	...	...	0·09	...	...	...	...	...	0·07	...	...
			Pakaur ...	0·10	...	...	...	...	...	...	0·15	2·50	...	...	0·06	...	...	...	...	...	0·04	...	...
			Naya Dumka ...	0·11	0·47	...	...	...	...	...	0·70	2·14	...	...	...	...	...	...	...	...	...	...	...
			Deoghur ...	0·10	0·12	...	...	...	...	...	0·40	1·94	...	...	...	...	...	...	...	...	...	...	...
			Jamtara .	0·25	0·06	...	...	...	...	0·05	1·10	2·22	0·01	0·06	...	...	...	...	...	...	...	...	...
			Mohapama ..	...	...	...	...	...	...	...	0·24	1·20	...	0·19	...	...	...	...	...	...	...	...	...
			Vanthai ..	0·06	0·23	...	...	...	...	...	0·86	2·06	...	...	...	...	...	...	...	...	...	...	...
			Assanboni .	...	...	...	...	...	...	1·34	2·05	...	...	0·04	...	...	...	...	...	...	...	...	...
			Karikund ...	0·08	0·05	...	...	...	...	...	0·45	2·18	0·01	...	...	...	...	...	...	...	...	...	...
			Madhupur ...	0·18	0·20	...	...	...	...	...	0·95	2·02	...	...	...	...	...	...	...	...	...	...	...
			Sarwan ...	0·24	0·35	...	...	...	...	...	0·83	2·61	...	...	...	...	...	...	...	...	...	...	...
			Sarath ...	0·30	0·10	...	...	...	...	...	1·30	2·88	...	...	...	...	...	...	...	...	...	...	...
			Barkopa ...	...	...	...	...	...	...	...	0·11	...	2·16	...	...	...	...	...	...	...	...	...	...
			Bhagya ...	...	...	...	...	...	...	...	...	0·83	...	...	0·20	...	...	...	...	...	...	...	...
			Mohespur ...	...	0·06	...	...	...	...	0·25	0·37	2·30	...	0·06	...	...	...	...	...	...	0·17	...	...
			Hiranpur ...	...	...	...	...	...	...	0·23	1·3[illegible]	0·10	...	0·10	...	...	...	...	...	...	...	...	...
			Barharwa ...	...	...	...	...	...	...	...	0·15	1·34	...	...	0·09	...	...	...	...	...	0·01	...	...
			Sahibganj ...	...	...	...	...	...	...	...	0·09	0·64	...	0·17	0·05	...	...	...	...	...	...	...	...
			Bario ...	...	...	...	...	...	...	...	0·77	1·64	...	0·06	0·18	...	...	...	...	...	0·08	...	...

in Bengal in March 1905—*continued.*

Number of rainy days.	Average number of rainy days.	Total rainfall for the month.	Average rainfall for the month.	Heaviest rainfall during the month.	Total rainfall from 16th Oct. 1904 up to 31st March 1905.	Average rainfall from 16th Oct. up to 31st March.	Station.	District.	Division.	Meteorological Division.
4	0·87	1·65	0·28	0·87	7 23	3·31	Buxar ...	Shahabad.	Patna—*concluded.*	Bihar—*concluded.*
2	1 00	0 82	0·13	0·26	4·97	3 22	Dehri			
2	0·97	0 77	0 47	0 46	4 09	3·07	Bhabhua.			
3	0·84	0 78	0 26	0 41	4 78	3 08	Sasaram.			
4	0 81	1 76	0·47	0 94	6 70	3 20	Arrah.			
	0 83		0 03			3 23	Mohanea.			
5	0·35	1 67	0 11	0·85	5·80	3·74	Agaon.			
	0 23		0 09			2 91	Ramagar.			
4	0 84	0·88	0·27	0·27	7·09	3 48	Koath.			
5	0 84	0 92	0 16	0·16	5 97	3 44	Sikroul.			
3	0 84	0 81	0 14	0·30	4·81	4 33	Basowan.			
3	0·56	0 61	0 23	0·30	4·90	3 79	Monaharpur.			
3	0·74	0 87	0·23	0·23	10·66	2 34	Gopalganj ...	Saran.		
6	0 83	1·18	0·26	0 25	10·36	3 05	Siwan.			
4	0·29	1 39	0 06	0 58	9 85	2 69	Ekma.			
3	0 71	0 85	0 34	0·49	9 73	2·79	Chapra.			
2	?	0·81	?	0 41	10·74	?	*Hathua.*			
3	0·29	0·99	0 03	0 50	13 61	2 84	Ammor.			
5	0 00	0·74	0·00	0·23	10 86	2 16	Basantpur.			
4	?	0 89	?	0 22	6·75	?	*Darauli.*			
3	?	1·02	?	0·50	9·51	?	*Bhoreh.*			
4	?	1 61	?	0·80	10 41	?	*Sripur.*			
3	0·77	0 64	0 49	0·22	10·17	2 31	Motihari ...	Champaran.		
2	0·90	0 85	0 45	0 44	8 78	2 45	Bettiah.			
3	0 53	0·74	0 45	0 32	8 26	2 84	Bagaha.			
4	0 73	0 86	0·35	0·19	10 25	2 49	Barhurwa.			
1	?	0·40	?	0 35	8 29	?	*Ramnagar.*			
3	?	0·45	?	0 19	5 90	?	*Shikarpur.*			
5	?	0·94	?	0 50	11·45	?	*Kissoriah*			
2	?	0·48	?	0·20	?	?	*Dhanaha.*			
3	0·87	0·29	0·87	0 41	11·35	2 69	Sitamarhi ...	Muzaffarpur.		
	0 47		0·43			3 16	Muzaffarpur.			
6	0·49	1·38	0 43	0·75	6·15	2 88	Hajipur.			
4	0·33	1 15	0·26	0 51	7·90	3 14	Pusa.			
3	0·51	0·73	0·30	0·36	6·99	2 83	Mahua.			
3	1·06	0·90	0 37	0 50	6·93	3·06	Shishar.			
3	0·79	0 56	0·43	0 28	3 83	1·76	Pupri.			
3	0·67	0·91	0·36	0 44	5·80	2 59	Tajpur (Samastipur).	Darbhanga.		
4	0·53	1·34	0·17	0·65	9·04	2·65	Darbhanga.			
3	0 68	0 53	0 40	0·36	8·87	2·93	Madhubani.			
4	0 83	1·03	0 54	0·40	8 76	2·39	Rahera.			
3	0 53	0·88	0·31	0·29	5 13	2·01	Koserha.			
3	?	0 78	?	0 34	13·23	?	*Khutauna.*			
3	?	0·98	?	0 37	11 14	?	*Ladania.*			
	?		?			?	*Laukaha.*			
4	0·77	2·51	0 31	1·73	5·85	3 14	Begusarai ...	Monghyr.		
4	0·87	1·96	0 44	1·43	6·43	2 99	Monghyr.			
3	0·77	2·13	0 41	1 73	6·58	2 79	Jamui.			
4	0 53	1·52	0·43	0·99	10 07	3·27	Gogri.			
3	0·53	1·91	0·37	1 38	7 48	2 87	Jamalpur.			
4	0·53	2·06	0·38	1·48	6·11	2 69	Sonkhpura.			
4	0·66	3 48	0 43	2 13	8 36	3·76	Chakai Banda			
5	0·86	1 11	0·28	0·40	6 84	1·91	Chapreon.			
5	0·50	2 41	0 18	1 86	8 44	3 16	Gidhour.			
3	1 00	2 36	0 30	1 87	9 13	2·69	Kharagpur.			
4	0·90	1 11	0 42	0 40	6·31	2 73	Madhipura ...	Bhagalpur.		
2	0 36	0 85	0·49	0·60	7 40	3 11	Bangaon (Sylahad).			
3	0·90	1·37	0 40	0 57	11·30	3·42	Sapaul.			
3	0·87	0·74	0 25	0 37	8 56	3 73	Pratapganj.			
3	0 94	1·38	0 14	1·15	6 50	3 49	Bhagalpur.			
3	1 03	2·30	0 46	2·03	9·09	3 18	Banka.			
3	1·07	1·41	0·31	1·08	7·11	2 71	Colgong.			
4	0·87	3 17	0·23	1·96	8·09	3 16	Bansul.			
4	1·21	1 86	0·39	0·67	6·23	2·86	Kishanganj ...	Purnea.	Bhagalpur.	
4	1 07	0 99	0·04	0 30	8·17	3 73	Araria.			
5	0 83	1·41	0 40	0 43	6·83	3 83	Purnea.			
2	0 90	0·84	0 40	0·61	4·36	2 96	Gondwara (*Kursh*).			
	0·78		0·24			1 38	Barsoe.			
3	1·11	0·77	0 35	0 50	9·77	2 83	Forbesganj.			
3	1·13	1 84	0·64	1 34	8 14	1·97	Kaliganj.			
4	1·10	1 98	0 62	1·03	8·78	4·33	Malda ...	Malda.		
5	0 91	1 67	0 30	0·96	7·35	3 70	Chanchal.			
4	1 00	1·79	0 30	1·04	6·79	3 14	Gajol.			
4	1·47	2·00	0·52	1 00	6·11	3·71	Sibganj.			
5	?	2 84	?	1 33	8·34	?	*Gomastapur.*			
5	?	3 47	?	2 30	7 73	?	*Nawabganj.*			
4	0·70	1·08	0·40	1·03	7·91	2·36	Rajmahal ...	Santhal Parganas		
4	1 00	2·91	0 49	2 00	8·08	3 00	Godda			
4	1·28	2 34	0·49	2·00	8·23	3 19	Pakaur.			
4	1 41	3 49	0 81	2·16	8 06	3·27	Maja Dumka.			
4	1 36	3·06	0·63	1·94	7 58	2·76	Deoghar			
5	1·37	4·01	0 54	2·28	7·37	3·04	Jamtara			
	?		?			?	*Mahagama.*			
3	0 87	2·06	0 63	2·06	6·87	2·75	Nunihat.			
2	0 71	3 38	0·47	2·01	8·06	3 17	Asansoni			
3	0 89	3 13	0 17	2·16	7·01	2·79	Katikund.			
6	0·71	3·04	0·39	2·06	6·87	3 07	Madhupur.			
4	0·43	4·09	0 13	2·01	7·09	3 63	Sarwan.			
5	0 71	4·37	0·36	2 38	6 03	2·53	Sarath.			
2	1·17	3 27	0·39	2 16	5·76	3 30	Narkopa.			
3	0 43	1·21	0·20	0 32	4 88	2·19	Bhagya.			
5	0 87	3 35	0 15	2·26	5·47	3 62	Mohanpur.			
3	?	3·30	?	2·28	6·11	?	Hirenpur.			
3	0 85	1·73	0·48	1·24	7·95	2·86	Barharwa.			
3	0 43	1·19	0·24	0·64	6·78	2·15	Sahibganj.			
3	?	1·90	?	1·18	8 54	?	Barlo.			

Table of Rainfall recorded at stations

Meteorological Division.	Division.	District.	Station.	1	2	3	4	5	6	7	8	9	10	11	12	13	14	15	16	17	18	19	20
ORISSA.	Orissa.	Cuttack ...	Jagatsingpur ...	...	...	...	...	...	...	...	...	...	0·25	...	...	...	...	...	...	0·52	...	0·14	2·60
			Banki ...	0·04	0·05	...	...	...	...	...	...	...	...	...	...	...	...	...	...	0·03	0·76	...	0·19
			Cuttack ...	...	0·03	...	0·02	...	...	...	...	...	0·06	...	0·06	...	...	...	...	...	0·14	...	0·13
			False Point ...	...	...	...	...	...	...	...	...	...	...	...	...	...	0·20	...	...	...	...	...	0·16
			Kendrapara ...	...	...	0·09	...	...	...	...	...	...	...	0·08	...	...	...	...	...	...	0·02	...	0·30
			Jajpur ...	...	0·06	0·30	...	...	...	...	...	...	...	...	0·04	0·01	0·01	...	...	0·25	0·30	...	...
			Dharmsala ...	0·30	...	...	...	...	...	...	...	...	...	...	0·08	...	...	...	...	0·39	...	...	...
			Salepur ...	...	...	0·35	...	...	...	...	...	...	...	0·12	0·18	...	...	...	...	...	0·35	...	...
		Balasore ...	Akhyapada ...	...	0·17	0·38	...	...	...	...	...	...	...	...	...	...	0·02	...	...	...	0·04	...	...
			Chandbali ...	...	0·15	1·92	...	...	...	...	...	...	...	...	...	...	...	...	...	1·70	...	...	...
			Bhadrak ...	...	0·85	0·05	...	...	...	...	0·01	...	...	...	0·02	0·30	...	...	...	...	0·32	...	...
			Soro ...	...	0·55	0·45	...	...	...	...	0·15	...	...	...	1·47	...	...	...	...	0·05	...	...	...
			Balasore ...	0·04	...	0·15	...	...	...	...	0·01	...	...	...	0·28	...	...	...	...	0·55	0·06	...	...
			Jellasore ...	0·65	0·02	0·03	...	...	...	...	1·25	...	...	0·05	...	...	...	...	...	0·17	...	...	...
			Baliapal ...	...	...	0·18	...	...	...	...	0·05	...	0·05	0·02	0·22	0·25	...	...	...	0·05	...	...	...
			Eram (Basudebpur).	...	0·02	0·53	...	...	...	...	...	...	...	...	...	...	...	...	...	0·37	0·33	...	...
			Turigaria ...																				
			Banuth ...	...	0·03	0·14	...	...	...	...	0·30	...	...	...	...	1·00	...	...	...	...	...	...	...
		Angul ...	Angul ...	...	0·67	...	...	...	...	...	...	...	...	...	...	0·28	...	...	...	...	...	...	...
			Bantipara ...	0·12	0·06	0·01	0·45	0·04	...	...	...	...	...	...	...	...	...	...	...	...	0·17	...	...
			Chhendipada	0·02	0·09	...	0·37	...	...	...	0·09	...	...	...	...	...	...	...	...	...	...	...	...
			Tikerpara ...	0·35	0·85	...	...	...	...	...	...	...	...	...	...	...	...	...	...	0·12	...	...	...
			Balandapara	...	...	0·17	...	...	...	...	...	...	...	...	...	...	...	...	...	...	0·06	...	...
		Orissa Tributary Mahals.	Baramba ...	...	0·31	...	...	...	...	...	...	...	...	...	0·10	...	0·04	...	...	...	1·25	...	1·16
			Kunjabongar	1·05	0·17	1·56	...	...	...	...	...	0·12	0·05	0·46	0·56	...	...	...	...	...	0·15	...	...
			Dhenkanal ...	0·70	0·46	...	...	...	...	...	...	...	...	...	0·72	0·07	...	...	...	...	0·27	...	0·97
			Baisinga ...	...	0·22	0·54	...	...	...	...	0·16	...	...	...	0·76	0·77	...	...	...	...	...	...	...
			Keonjhar ...	0·30	0·49	...	...	...	1·45	0·02	...	...	...	...	...	...	...	...	...	...	...	...	...
			Anandapur ...	...	0·25	0·35	...	...	...	0·30	0·50	...	...	...	0·18	0·02	...	...	...	...	...	...	...
			Haripada ...	0·30	0·19	0·13	0·01	...	...	0·90	0·46	...	...	...	0·43	0·02	...	...	...	...	...	...	...
			Narsingpur ...	0·48	...	...	...	...	...	...	...	...	...	0·62	0·96	0·15	...	...	...	0·60	...	...	1·00
			Nayagarh ...																				
			Pal Lahera ...	0·02	0·44	...	0·60	...	...	0·12	0·10	...	...	...	...	...	...	...	...	0·06	...	...	...
			Ranpur ...	0·50	...	0·46	...	...	...	...	...	...	...	...	0·30	...	...	...	...	0·02	1·40	...	0·07
			Talcher ...	...	2·05	...	0·05	...	...	...	0·64	...	...	...	...	1·03	...	...	...	...	...	...	...
			Athmalik ...	0·30	0·11	...	...	...	...	...	...	...	...	...	...	...	...	...	...	0·17	...	...	...
			Hindol ...	0·17	0·30	...	...	...	...	...	...	...	...	0·04	0·76	...	...	...	...	0·02	...	...	0·22
			Boad ...	1·30	...	0·19	...	...	...	0·15	...	...	...	...	...	...	...	...	...	...	...	...	...
		Puri ...	Puri ...	0·27	...	...	...	...	...	...	...	...	...	...	...	...	0·12	...	...	...	1·48	...	0·12
			Khurda ...	0·07	...	...	...	...	...	...	...	...	...	...	...	...	...	...	...	0·67	...	...	0·23
			Bhanpur ...	0·15	...	...	...	...	...	...	...	...	...	...	...	0·17	0·04	...	...	0·87	0·11	0·05	0·81
			Gop ...	...	...	...	...	...	...	...	...	...	...	...	...	...	...	...	...	0·04	...	0·02	0·93
			Satpara ...	Not recorded																			
			Pipli ...	0·07	...	...	...	...	...	...	...	...	...	0·55	...	...	...	...	...	...	0·45	...	...
			Kanas ...	...	...	...	...	...	...	...	...	...	...	...	...	0·06	...	...	...	0·90	0·05	0·06	0·19
CHOTA NAGPUR.	Chota Nagpur.	Hazaribagh...	Pachamba (*Giridih*).	...	0·05	...	...	...	...	0·05	1·75	1·30	...	...	...	...	...	...	...	...	0·08	...	...
			Hazaribagh ...	0·95	1·37	...	...	...	...	0·27	1·46	1·63	...	...	...	...	...	...	...	...	...	...	...
			Barhi ...	0·64	0·14	...	0·02	...	0·35	0·33	0·85	0·46	...	0·05	...	...	...	...	...	...	...	...	...
			Chatra ...	0·17	1·00	...	...	...	...	0·40	1·04	0·71	...	0·01	...	...	...	...	...	...	...	...	...
			Kharagdiha ...	...	...	...	...	...	0·14	0·82	1·43	...	...	...	...	...	...	...	...	...	...	...	...
			Ramgar ...	1·10	0·10	...	...	...	...	0·10	0·75	...	...	...	...	...	...	...	...	...	...	...	...
			Kodarma ...	...	0·10	...	...	...	...	0·15	0·73	1·34	...	...	...	...	...	...	...	...	...	...	...
			Bagodar ...	0·69	...	...	...	...	...	0·30	1·90	1·94	...	...	...	...	...	...	...	...	...	...	...
		Ranchi ...	Lohardaga ...	...	0·44	...	...	...	...	0·32	...	0·30	...	...	...	...	...	...	...	...	...	...	...
			Ranchi ...	0·02	0·30	...	...	...	...	0·17	...	...	...	...	...	...	...	...	...	...	[illegible]	...	...
			Silli ...	...	0·30	...	...	...	...	...	...	...	...	...	...	...	...	...	...	...	...	...	...
			Palkot ...	...	0·05	...	0·47	...	...	...	...	...	...	...	...	...	...	...	...	...	...	...	...
			Bano ...	0·10	...	...	0·90	...	...	...	...	...	...	...	...	...	...	...	...	...	...	...	...
			Tamar ...	0·30	...	...	...	...	...	...	...	...	...	...	...	...	...	...	...	...	...	...	...
			Kurdeg ...	0·32	...	...	...	...	0·43	...	...	...	...	...	...	...	...	...	...	...	...	...	...
			Gumla ...	1·40	0·05	0·24	0·05	...	...	0·21	...	...	...	...	0·81	...	...	...	...	...	...	...	...
			Chainpur ...	0·30	...	...	0·15	...	...	0·05	...	...	...	...	...	...	...	...	...	...	...	...	...
		Chota Nagpur Tributary States.	Sirguja ...	...	...	...	...	...	...	...	...	...	...	...	...	...	...	...	...	...	...	...	...
			Jashpur ...	...	...	0·12	...	...	0·05	...	...	...	...	...	...	...	...	...	...	...	...	...	...
			Gangpur ...	...	...	...	...	...	0·19	...	...	...	...	...	...	...	...	...	...	...	...	...	...
		Palamau ...	Palamau (*Daltonganj*).	0·60	0·09	...	...	...	...	0·74	0·41	0·30	...	...	...	...	...	...	...	...	...	...	...
			Balumath ...	...	...	...	...	...	...	0·60	...	1·30	...	...	...	...	...	...	...	...	...	...	...
			Husainabad ...	...	0·15	...	...	...	...	0·30	0·28	...	...	...	...	...	...	...	...	...	...	...	...
			Garhwa ...	...	0·45	...	...	...	...	0·81	0·27	0·60	...	...	...	...	...	...	...	...	...	...	...
			Mahuadanr ...	0·02	0·47	...	...	...	...	0·80	...	...	...	...	...	...	...	...	...	...	...	...	...
			Panki ...	0·35	0·10	...	...	...	0·30	0·46	...	...	...	...	...	...	...	...	...	...	...	...	...
			Latehar ...	0·30	0·05	...	...	...	0·30	0·05	0·05	...	...	...	...	...	...	...	...	...	...	...	...
			Nagaruntari ...	...	...	...	...	...	...	1·30	...	...	...	...	...	...	...	...	...	...	...	...	...
			Ranka ...	...	...	...	...	...	...	1·00	0·02	0·19	0·07	0·05	...	...	...	...	...	...	...	...	...
			Chattarpur	...	...	...	...	...	...	0·66	...	0·70	2·10	...	...	...	...	...	...	...	...	...	...
			Bhaonathpur	0·05	...	...	...	...	...	0·75	0·27	...	...	...	...	...	...	...	...	...	...	...	...
			Patan ...	...	...	...	...	...	...	1·23	0·32	0·02	...	...	...	...	...	...	...	...	...	...	...
			Manatu ...	...	...	...	...	...	...	0·90	0·30	0·80	...	...	...	...	...	...	...	...	...	...	...
			Lesliganj ...	0·44	...	...	...	...	...	...	1·21	...	...	...	...	...	...	...	...	...	...	...	...
			Kerh ...	0·12	0·40	...	...	...	...	1·00	0·05	...	...	...	...	...	...	...	...	...	...	...	...
			Garu ...	0·10	...	...	...	...	...	0·10	0·30	0·30	...	...	...	...	...	...	...	...	...	...	...
		Manbhum ...	Purulia ...	...	0·42	...	...	...	...	...	0·01	0·18	...	...	0·72	...	...	...	...	...	0·04	...	...
			Gobindpur ...	1·52	0·22	...	...	...	...	...	1·19	1·20	...	...	0·15	...	...	...	...	...	...	...	...
			Raghunathpur	...	...	...	...	...	...	...	...	0·31	...	...	...	...	...	...	...	...	...	...	...
			Barabhum ...	...	0·45	...	0·05	...	...	...	0·10	...	...	...	...	...	...	...	...	...	...	...	...
			Jhalda ...	...	0·26	...	...	...	...	...	...	...	...	...	...	...	...	...	...	0·05	0·30	...	...
			Chas ...	0·14	0·40	...	...	...	...	...	...	0·76	...	...	...	...	...	...	...	...	...	...	...
			Pandra ...	1·24	0·14	...	...	...	...	...	0·04	1·[illegible]	0·02	...	0·12	...	...	...	...	...	...	...	...
			Manbazar ...	...	...	...	...	...	...	...	...	...	...	...	...	...	...	...	...	...	...	...	0·10
		Singhbhum ...	Chaibassa ...	0·21	0·64	...	0·24	...	...	...	0·15	...	...	...	0·02	...	...	...	...	...	...	...	...
			Chakradharpur	0·19	...	0·10	...	...	...	...	...	0·13	...	...	...	...	...	...	...	...	...	...	...
			Ghatsila ...	0·22	0·56	0·05	...	...	0·25	...	...	...	...	...	...	...	...	...	...	...	...	...	...
			[illegible] ...	0·05	0·30	...	0·19	...	0·56	...	0·05	...	...	...	...	...	...	...	...	...	...	...	...
			Goilkera ...	0·10	0·23	...	1·92	...	...	0·04	...	...	...	...	...	...	...	...	...	...	...	...	...
			Kalikapur ...	0·47	0·10	...	...	...	...	0·64	0·47	0·06	...	...	...	...	...	...	...	...	...	...	...
			Manoharpur ...	0·30	0·30	...	...	...	...	0·77	...	...	...	...	...	...	0·05	...	...	...	...	...	...
			Kolhan ...	0·30	...	...	0·15	...	...	0·20	...	...	...	...	...	...	...	...	...	...	...	...	...
			Seraikella ...	0·12	0·05	...	[illegible]	...	...	...	...	0·21	...	...	0·22	...	...	...	...	...	...	...	...
			Kharsawan ...	[illegible]	0·27	...	...	...	...	...	...	0·41	...	...	0·26	...	...	...	...	...	...	...	...
			Jaintgarh ...	[illegible]	...	1·07	[illegible]	...	...	0·06	0·22	...	...	...	...	...	...	...	...	...	...	...	...
			Jagannathpur	0·55	...	...	1·15	...	...	0·26	...	...	...	...	...	...	...	...	...	...	...	...	...

in Bengal in March 1905—*concluded.*

21	22	23	24	25	26	27	28	29	30	31	Number of rainy days.	Average number of rainy days.	Total rainfall for the month.	Average rainfall for the month.	Heaviest rainfall during the month.	Total rainfall from 16th Oct. 1904 up to 31st March 1905.	Average rainfall from 16th Oct. up to 31st March.	Station.	District.	Division.	Meteorological Division.
0·25	...	0·26	...	...	...	...	...	...	...	...	6	1·38	3·42	1·04	2·00	6·31	6·90	Jagatsingpur	Cuttack.	Orissa.	ORISSA.
0·56	0·57	...	...	...	...	...	0·66	...	...	0·43	6	2·33	3·49	1·39	0·86	7·00	5·95	Hanki.			
0·65	0·16	...	...	...	...	...	0·32	...	0·56	0·09	6	1·77	2·14	1·31	0·56	5·45	6·19	Cuttack.			
0·28	0·02	...	...	...	...	...	0·15	...	...	...	4	1·48	0·91	1·02	0·30	5·52	9·46	False Point.			
0·07	0·06	...	...	0·30	...	...	0·45	0·01	...	...	3	1·77	1·26	0·92	0·45	4·19	6·92	Kendrapara			
0·92	...	...	...	...	...	0·10	0·09	...	0·67	...	6	2·17	2·65	1·16	0·92	4·42	5·98	Jajpur.			
0·71	...	...	...	...	...	0·13	...	...	...	...	4	2·20	1·51	1·52	0·71	3·92	5·59	Dharmsala.			
0·51	0·12	...	...	...	...	...	...	...	...	...	6	1·87	1·53	1·02	0·51	5·47	5·02	Salepur.			
...	0·41	...	...	...	...	0·11	...	...	...	...	4	2·06	1·12	1·58	0·41	3·00	5·61	Akhyapada ...	Balasore.		
...	2·27	...	...	0·62	...	...	...	...	...	...	5	1·78	6·66	1·06	2·27	9·80	6·75	Chandbali.			
...	...	...	...	0·83	0·40	...	...	0·67	...	0·03	7	2·03	4·29	1·47	0·91	7·79	6·60	Bhadrak			
0·85	0·18	...	...	...	0·60	2·40	...	...	...	...	7	2·63	4·53	1·76	1·47	6·55	6·17	Soro.			
0·09	0·26	...	...	...	0·85	0·20	0·04	0·40	0·08	0·26	8	2·57	3·20	1·78	0·85	7·13	7·40	Balasore.			
...	0·57	...	...	...	0·63	...	...	...	...	0·31	6	1·89	3·33	1·29	1·35	7·97	4·74	Jellasore.			
...	0·06	...	...	...	1·02	...	...	...	...	0·35	5	?	2·95	?	1·02	5·21	?	*Baliapal.*			
...	...	...	...	...	...	...	...	0·02	0·04	0·05	3	?	1·26	?	0·53	3·64	?	*Eram (Basudebpur).*			
...	0·11	...	...	...	1·50	...	...	2·50	0·03	0·12	7	?	5·73	?	2·50	?	?	*Turigaria.*			
																		Banuth.			
...	0·32	...	...	...	...	0·20	...	...	...	0·25	5	2·20	1·02	1·20	0·67	4·87	5·01	Angul ...	Angul.		
1·00	0·17	...	...	...	...	0·32	...	...	1·19	0·02	7	1·60	3·16	0·71	1·19	7·12	4·18	Bissipara.			
...	...	...	...	...	...	...	...	...	...	...	1	?	0·57	?	0·57	3·47	?	*Chhendipada.*			
0·14	0·16	...	...	...	0·11	...	...	0·37	...	...	7	?	2·46	?	0·65	3·50	?	*Tikerpara.*			
...	...	...	...	...	0·67	...	...	1·16	0·07	...		?	2·15	?	1·16	2·15	?	*Balandapara.*			
1·70	1·22	...	...	0·12	...	...	...	...	1·00	...	8	2·46	6·97	0·93	1·70	7·88	4·69	Baramba ...	Orissa Tributary Mahals.		
0·12	...	...	...	...	...	...	0·73	...	0·47	1·45	11	1·56	6·97	1·13	1·56	10·46	4·58	Kunjabongarh			
0·23	0·47	...	...	...	...	...	...	...	0·21	...	8	2·45	4·06	1·33	0·97	8·88	4·93	Dhenkanal.			
...	1·15	...	...	...	...	...	0·10	...	0·13	...	8	?	4·15	?	1·15	8·63	?	*Baisinga.*			
...	...	...	...	...	0·67	...	...	...	...	...	5	1·21	3·56	0·74	1·48	9·15	3·79	Keonjhar.			
...	...	...	...	...	...	0·06	...	0·31	0·02	...	6	1·88	1·89	1·19	0·50	5·15	5·44	Arandapur.			
0·02	...	...	...	...	...	0·55	...	...	...	...	7	2·22	2·78	1·45	0·60	6·93	5·06	Baripada.			
1·45	...	...	...	...	0·06	...	...	0·20	0·13	...	8	1·71	4·75	0·64	1·45	6·56	3·74	Narsinghpur.			
...	...	...	...	...	...	...	...	...	...	...		1·43		0·53			4·63	Nayagarh.			
...	...	...	...	...	0·01	0·42	...	...	0·07	...	4	1·38	1·33	1·15	0·44	7·37	3·72	Pal Lahera.			
0·05	0·15	...	...	0·19	...	...	0·29	0·05	0·27	0·25	9	0·88	4·10	0·39	1·40	6·61	3·87	Ranpur.			
...	...	...	...	...	...	1·36	...	...	0·25	...	5	2·30	5·30	1·31	2·08	10·87	4·19	Talcher.			
...	...	...	...	...	...	0·13	...	0·03	...	...	4	?	0·64	?	0·20	1·80	?	*Athmalik.*			
0·50	...	0·28	...	...	...	...	0·18	0·18	0·03	...	8	?	2·78	?	0·76	5·87	?	*Hindol.*			
...	...	...	...	...	0·67	...	...	...	...	...	4	?	3·24	?	1·20	?	?	*Boad.*			
...	0·03	...	0·73	...	...	...	...	...	...	0·10	6	1·05	2·80	0·63	1·41	11·33	9·41	Puri ...	Puri.		
...	0·89	...	...	...	...	...	0·22	...	...	0·25	4	1·97	1·03	1·12	0·67	5·02	6·75	Khurda.			
0·05	0·76	...	...	...	...	...	...	...	0·04	0·06	6	2·14	2·86	1·00	0·87	9·31	8·27	Bhanpur.			
0·65	...	0·26	...	...	...	0·13	...	0·10	...	...	8	1·21	1·21	0·70	0·64	5·62	8·53	Gop.			
												1·04		0·96			7·12	Satpara.			
0·15	0·10	...	...	...	...	...	...	...	0·09	...	4	1·29	1·71	0·96	0·85	5·28	5·43	Pipli.			
0·20	...	...	...	...	...	...	...	...	0·20	0·10	5	?	1·74	?	0·90	4·50	?	*Kanas.*			
...	0·06	...	...	...	...	...	...	0·10	...	...	3	1·32	3·43	0·63	1·75	7·10	3·56	Pachamba (*Giridih*) ...	Hazaribagh.	Chota Nagpur.	CHOTA NAGPUR.
...	0·29	...	...	...	...	...	0·09	0·42	...	...	7	1·61	6·47	0·80	1·62	11·61	3·78	Hazaribagh.			
...	...	...	...	...	...	...	...	0·59	...	...	6	1·47	2·70	0·57	0·89	6·96	4·09	Barhi.			
...	...	...	...	...	...	...	...	0·11	...	...	6	1·60	3·83	0·65	1·04	7·93	3·94	Chatra.			
...	...	...	...	...	...	...	...	...	...	...		1·20		0·78	1·43		3·62	Kharagdiha.			
...	0·20	...	...	...	...	...	...	0·15	...	...	6	1·00	2·00	0·64	1·10	7·72	4·17	Ramgar.			
...	...	...	...	...	...	...	...	0·10	0·06	...	5	?	3·36	?	1·34	6·58	?	*Koderma.*			
...	...	...	...	...	...	...	...	0·25	0·23	...	6	?	5·18	?	1·92	?	?	*Bagodar.*			
...	...	...	...	...	...	...	...	0·26	0·07	...	4	2·18	1·34	0·86	0·46	7·27	4·57	Lohardaga ...	Ranchi.		
...	...	...	...	...	...	0·23	0·06	...	...	...	3	2·38	0·30	1·22	0·30	5·92	4·62	Ranchi.			
0·44	...	...	...	...	...	...	...	...	...	0·15	3	1·29	1·09	0·85	0·50	5·80	2·40	Silli.			
...	...	...	...	...	...	0·43	...	...	0·54	...	3	0·71	1·66	0·36	0·50	5·41	2·79	Palkot.			
...	...	...	...	...	...	...	...	...	...	...	2	?	0·70	?	0·50	7·25	?	*Bano.*			
...	...	...	...	...	...	0·10	0·04	0·08	0·06	...	2	0·86	0·61	0·25	0·30	3·90	2·00	Tamar.			
...	...	...	...	...	...	0·35	0·30	...	0·25	...	5	?	1·85	?	0·50	9·34	?	*Kurdeg.*			
...	...	...	...	...	...	0·30	0·10	...	0·65	...	5	?	2·53	?	1·40	8·51	?	*Gumla.*			
...	...	...	...	...	...	0·26	0·34	...	0·15	...	4	0·86	1·55	0·26	0·34	11·10	3·22	Chainpur.			
...	...	...	...	...	...	0·30	...	...	...	...	1	1·31	0·30	0·75	0·30	14·20	4·68	Sirguja ...	Chota Nagpur Tributary States.		
...	...	...	...	...	0·28	0·24	...	0·65	...	...	4	2·80	1·52	1·30	0·62	8·38	5·34	Jashpur.			
...	...	...	...	...	0·22	0·20	...	...	...	...	3	1·78	0·61	0·84	0·29	4·15	4·67	Gangpur.			
...	...	...	...	...	...	...	0·08	0·07	0·01	...	3	1·67	1·79	0·63	0·74	6·09	3·40	Palamau (*Daltonganj*).	Palamau.		
...	...	...	...	...	...	...	0·25	...	...	...	3	1·27	1·85	0·46	1·20	5·80	3·94	Balumath.			
...	...	...	...	...	...	...	...	0·72	...	...	4	1·07	1·30	0·37	0·80	5·63	3·68	Hussainabad.			
...	...	...	...	...	...	...	...	0·34	...	...	3	1·10	1·05	0·36	0·81	6·22	3·73	Garhwa.			
...	...	...	...	...	...	...	0·21	...	...	...	4	?	1·40	?	0·30	5·12	?	*Mahuadanr.*			
...	...	...	...	...	...	0·20	...	...	...	...	4	?	1·40	?	0·45	4·10	?	*Panki.*			
...	...	...	...	...	...	...	...	0·30	...	...	[illegible]	?	0·96	?	0·30	4·83	?	*Latehar.*			
...	...	...	...	...	...	...	...	...	...	...	1	?	1·98	?	1·65	5·81	?	*Nagaruntari.*			
...	...	...	...	...	...	...	...	0·26	...	...	4	?	2·30	?	1·00	6·46	?	*Ranka.*			
...	...	...	...	...	...	...	...	...	...	...	3	?	2·45	?	2·10	7·45	?	*Chatterpur.*			
...	...	...	...	...	...	...	...	...	...	...	2	?	1·38	?	0·93	4·02	?	*Bhaonathpur.*			
...	...	...	...	...	...	...	...	...	...	...	2	?	1·94	?	1·13	6·92	?	*Patan.*			
...	...	...	...	...	...	...	...	0·20	...	...	4	?	2·10	?	0·90	7·00	?	*Monatu.*			
...	...	...	...	...	...	...	...	...	...	...		?		?	1·21		?	*Leslieganj.*			
...	...	...	...	...	...	...	...	0·41	...	...	5	?	2·86	?	1·00	7·05	?	*Kerh.*			
...	...	...	...	...	...	...	...	...	...	...	4	?	0·70	?	0·30	5·90	?	*Garu.*			
0·60	0·05	...	...	...	...	0·06	...	...	...	...	3	2·17	1·26	0·93	0·60	6·58	3·44	Purulia ...	Manbhum.		
...	0·45	...	...	...	...	...	...	0·81	...	...	6	1·45	4·54	0·77	1·72	8·45	3·66	Gobindpur.			
0·03	...	...	...	...	...	0·05	0·17	0·08	...	...	3	1·47	0·98	0·74	0·48	1·92	2·70	Raghunathpur.			
...	...	...	...	...	...	...	...	...	...	...	2	1·60	0·63	0·94	0·65	8·20	3·12	Barabhum.			
...	...	...	...	...	...	0·28	...	...	...	0·07	3	1·40	0·10	1·30	0·22	4·41	3·60	Jhalda.			
...	0·17	...	...	...	...	...	...	...	...	...		1·53		0·74	0·75		3·13	Chas.			
...	...	...	...	...	0·09	...	...	0·15	...	0·10	8	0·90	4·98	0·23	1·70	8·21	3·40	Pandra.			
...	...	...	...	...	...	...	...	...	...	...	1	?	0·60	?	0·60	?	?	*Manbazar.*			
...	...	...	...	...	...	0·06	...	...	0·03	...	4	2·19	2·16	1·12	0·94	7·78	4·57	Chaibassa	Singhbhum.		
...	...	...	...	...	0·39	...	...	0·34	...	...	6	1·20	0·70	0·36	0·34	7·80	3·51	Chakradharpur.			
...	0·13	0·20	...	...	...	0·74	...	...	...	...	5	2·13	1·93	1·00	0·45	7·24	4·96	Ghatsila.			
...	...	...	...	...	0·12	...	...	...	...	0·04	7	2·07	2·00	1·17	0·70	5·78	3·91	Baharagora.			
...	...	...	...	...	...	0·20	...	...	0·05	0·05	6	0·96	2·80	0·31	1·72	8·35	2·37	Gailkura.			
...	...	...	...	...	...	1·10	...	...	...	...	5	1·71	2·74	0·40	1·10	6·03	2·00	Kalikapur.			
...	...	...	...	...	...	0·05	...	...	...	0·06	8	0·90	1·30	0·72	0·55	3·38	1·90	Manoharpur.			
...	...	...	...	...	0·46	...	...	...	...	0·19	5	?	1·09	?	0·30	6·45	?	*Kalbari.*			
...	...	...	...	...	...	0·01	...	...	0·07	...	5	?	2·11	?	0·23	6·04	?	*Seraikela.*			
...	...	...	...	...	...	0·13	...	...	0·00	...	5	?	1·70	?	0·45	4·74	?	*Kharsawan.*			
...	...	...	...	...	...	...	...	...	...	...		?		?	1·07		?	*Jaintgarh.*			
...	...	...	...	...	...	0·10	...	...	...	...	4	?	2·26	?	1·15	5·10	?	*Jaganathpur.*			

SUMMARY OF THE METEOROLOGICAL AND RAINFALL OBSERVATIONS TAKEN IN BENGAL, AND OF THE METEOROLOGICAL OBSERVATIONS TAKEN IN ASSAM, FOR THE MONTH OF MARCH 1905.

THE abnormal features which distinguished the two previous months of the year were to a certain extent apparent in the weather of March. The cold-weather storms, which had been so marked a characteristic of the early part of the year, continued into the present month at least during the former half, and were accompanied by unusual precipitation and a marked depression of temperature. During the latter half of the month, on the other hand the weather was of the variable character which indicates the change of the season, and here, too, the weather was more unsettled and the period of change from the cold to the hot weather distribution of pressure more prolonged than usual

At the beginning of the month a cold-weather depression, which entered the province on the last day of February, was affecting the weather. Though shallow and diffused and therefore accompanied by only a slight fall of pressure, it possessed in the main all the characteristics of its predecessors, bringing with it a fair amount of rain and being followed by a well-marked cold wave and a high pressure distribution. Even during its passage pressure remained well above the normal, while after it had disappeared, the excess of pressure became again abnormal.

On the morning of the 6th indications of a change appeared, but it was not till the 8th that a well-marked depression was shown over Orissa. This storm, which brought with it very considerable rainfall to the whole province, did not pass away till the 11th, on which date pressure for the first time during the month fell below the normal. Mean temperature naturally rose under the influence of the depression, the rise, which was, as usual, greatest in the night temperatures, being to a certain extent counteracted during the day by the rainy and cloudy skies. Notwithstanding this rise, however, mean temperature remained below the normal throughout the province. A recovery of pressure set in on the 13th, but it was of short duration, as the barometer fell rapidly on the 15th, to a point below the normal, and as the fall continued unchecked till the 18th the defect from the normal was on the latter date very large. This last change of pressure was the first indication of the seasonal change of distribution which usually takes place in March and resulted in the establishment of ordinary hot-weather conditions on the morning of the 17th. On that date moist southerly winds were blowing over the greater part of the province, while the temperature for the first time in the month rose above the normal. Weather remained of the ordinary hot-weather character till the 23rd, though the pressure distribution was somewhat unstable, and this, combined with the strong indraught of humid winds from the bay due to the steep gradient from south-east to north-west, gave rise to showery and disturbed weather, especially in the south of the province. These unsettled conditions culminated on the 21st and 22nd, a well-defined depression being shown on the latter date over the province, and gave rise to general and in some cases moderately heavy rain.

Pressure had been falling during the greater part of this period, and on the 21st was in very considerable defect throughout the province. Temperature fluctuated but slightly between the 17th and the 21st, and the difference from the normal was at no time great, there being, if anything, on the whole, a slight defect.

On the 22nd a change in the weather conditions set in, pressure beginning to rise rapidly in the west, while temperature began to fall. On the 23rd the distribution was unusual, a narrow ridge of high pressure extending across the centre of the province from west to east, while the area of lowest pressure had shifted to the south-west of the bay. At the same time temperature had fallen still further, and was in large defect over the province On the 24th pressure was still lowest in the south-west of the bay, but from that a gradual change took place in the distribution, the advance of an area of low pressure from the United Provinces leading to a re-establishment of more normal conditions on the 29th, when pressure was again highest in the south of the bay. This area of low pressure moved slowly eastwards during the last days of the month and on the 31st was lying over Assam These changes were accompanied by light rainfall, which, however, was chiefly confined to Assam and the southern parts of the province. Though a steadily rising temperature likewise characterised this period, the weather was still cooler than usual in the southern portions of the province even on the 30th of the month. On the 31st the position of the area of lowest pressure in the extreme north-east gave rise to another change, weather being on that day fine and cool with very dry west winds.

Pressure remained for the first twelve days of the month above the normal and was at times in large excess. From this date till the 23rd it continued with one slight intermission on the 14th below the normal, the defect being very large on the 17th and 18th On the 22nd a rise set in and pressure was in slight excess till the 28th; from this date to the end of the month there was a slight deficiency On the whole there was a balance of high pressure during the month over the whole province, and the mean is slightly above the normal, though the excess is slight.

Temperature remained below the normal till the 17th, when for the first time slightly hotter weather than usual prevailed. From the 17th to the 21st the fluctuations were small, though temperature was, on the whole, below the normal; on the 22nd a sharp fall set in, and temperature was again in large defect on the 23rd and 24th; from the 24th to the 30th

temperature was steadily rising, but even on the latter date weather was still comparatively cool over the south of the province. On the last day of the month a drop took place, and temperature was again low throughout.

The average of the mean daily temperature was consequently considerably below the normal, but the deficiency was much more marked in the day than in the night temperatures, the greatest recorded departure from the normal for the mean maximum being over 7°, while from the mean minimum it was only about 4°.

Rainfall was in excess for every division of the province. The weather was more or less showery for the greater part of the month, but there were, besides, special periods when unusual and fairly general precipitation took place, *i.e.*, on the 1st and 2nd, in all the divisions except North Bengal; 7th to the 12th practically the whole province; 21st and 22nd the whole province except South Bihar and Chota Nagpur. The greatest excess is shown in East Bengal where the average rainfall amounting to 7·68 inches was over three times the normal amount, while even in North Bengal, where the percentage excess was least, the normal average rainfall of 1·19 inches was more than doubled. In Bihar, where the average rainfall for this month is usually very small, *i.e.*, ·38, an average of 1·69 was reached for March of this year.

The following table gives the summary of the temperature and rainfall data of each of the seven meteorological divisions of the Province for the month of March 1905:—

Meteorological Divisions.	Temperature.						Rainfall—							
	Highest observed during month.	Lowest observed during month.	Average for month.			Average mean of month above or below normal mean of month.	Of month.			Rainy days.			Since 16th Oct. 1904.	
			Of highest of each day.	Of lowest of each day.	Of mean for each day.		Average.	Normal average.	Variation.	Average number in month.	Normal average number in month.	Variation.	Average.	Normal average.
South-West Bengal	99·6	57·2	86·1	66·2	76·4	—4·9	3·68	1·16	+2·52	5·79	1·99	+3·80	7·26	4·72
North Bengal	96·2	50·1	83·0	61·3	72·3	—2·9	2·54	1·19	+1·35	5·05	1·99	+3·16	7·29	4·66
East Bengal	93·8	55·1	83·7	63·7	74·3	—2·7	7·68	2·32	+5·36	8·50	3·04	+5·46	12·69	7·43
Bihar	98·0	48·2	84·8	61·3	73·0	—3·6	1·69	0·38	+1·31	3·39	0·99	+2·79	7·11	2·99
Orissa	99·4	68·7	87·6	72·9	80·1	—1·3	2·82	1·18	+1·64	5·23	1·97	+3·26	6·14	6·72
Chota Nagpur*	99·9	51·9	86·4	66·1	75·8	—3·8	2·10	0·71	+1·39	4·16	1·45	+2·71	6·69	3·98
Assam	91·7	48·6	78·9	59·3	69·4	—3·2								

* Purulia not included.

Meteorological Office, Bengal,
The 18th April 1905.

G. W. Küchler,
Meteorologeal Reporter to the Govt. of Bengal.

BENGAL CENTRAL RAILWAY COMPANY, LIMITED.

Abstract of principal Commodities carried over the Bengal Central Railway during the month of January 1905, as compared with the same month of previous year.

ARTICLES.	1905.		1904.		TOTAL.		Increase	Decrease.
	Up.	Down.	Up.	Down.	1905.	1904		
	Tons	Tons	Tons.	Tons	Tons	Tons.	Tons.	Tons
I.—Apparel, including drapery, haberdashery, millinery, uniforms, accoutrements, boots and shoes	2		3		2	3		1
II.—Coal and Coke carried for the Public and Foreign Railways.	2,789		4,087		2,789	4,087		1,298
III.—Cotton—								
1. Raw	1	3	1		4	1	3	
2. Manufactured—								
(a) Twist and yarn, European	33		35		33	35	3	
(b) Ditto, Indian								
(c) Piece-goods, European	121		121		121	121		
(d) Ditto, Indian	1				1		1	
(e) Others								
IV.—Chemicals, excepting saltpetre								
V.—Drugs—								
1. Intoxicating, other than opium								
2. Non-intoxicating—								
(a) Medical preparations	3		1		3	1	2	
(b) Others				2		2		2
VI.—Dyes and Tans—								
1. Indigo								
2. Myrabolams								
3. Cutch								
4. Turmeric	2	4	2	2	6	4	2	
5. Alizarine and Aniline Dyes								
6. Al (Morinda Citrifolia)								
7. Tanning barks				5		5		5
8. Others	1				1		1	
VII.—Fodder—								
1. Oilcake	118		119		118	119		1
2. Hay, straw and grass	1		6		1	6		5
VIII.—Fruits and vegetables, fresh	670	327	561	174	997	735	262	
IX.—Grain and Pulse—								
1. Wheat	2	17	4	41	20	45		25
2. Rice in the husk	2	353	1	713	355	714		359
3. Do. not in the husk								
4. Jawar and bajra								
5. Gram and pulse	45	79	78	179	124	257		133
6. Wheat flour	20		20		20	29		9
7. Others								
X.—Hides and Skins								
1. Hides of cattle—								
(a) Dressed or tanned								
(b) Raw		49		50	49	50		1
2. Skins of sheep and other animals—								
(a) Dressed or tanned								
(b) Raw		8		10	8	10		2
XI.—Horns								
XII.—Hemp (Indian) and other fibres, excluding jute.		30			30		30	
XIII.—Jute—								
1. Raw	7	2,076	2	3,300	2,076	3,302		1,226
2. Gunny-bags and cloth		7	15	3	14	16		2
XIV.—Lac								
XV.—Leather—								
1. Unwrought								
2. Wrought, excepting boots and shoes.								
XVI.—Liquors—								
1. Ale and beer								
2. Wine and spirit of all kinds, including country spirit.	2		3		2	3		1
3. All other sorts, including toddy and fermented liquor, other than ale and beer.								
XVII.—Metals—								
1. Copper, unwrought								
2. Brass, ditto		5			5		5	
3. Copper, wrought								
4. Brass, ditto	17		5	2	17	7	10	
5. Iron and steel—								
(a) Cast	1	1			2		2	
(b) Unwrought								
(c) Wrought	44		342		44	342		298
(d) Manufactured	2		5		2	5		3
6. Others	13	19	13	31	32	44		1
XVIII.—Oils—								
1. Kerosine	134		99		134	99	35	
2. Castor	1				1		1	
3. Cocoanut	13		13		13	13		
4. Mustard and rape	69		155		69	155		86
5. Others								
XIX.—Oilseeds—								
1. Linseed		31		90	31	20	11	
2. Rape and mustard	161		265		161	265		104
3. Til or jinjili								
4. Poppy								
5. Earthnuts								
6. Castor								
7. Others								
XX.—Opium			1			1		1
XXI.—Paper and Pasteboard			6			6		6
XXII.—Provisions—								
1. Ghee	4		4		4	4		
2. Dried fruits and nuts		2		2	2	2		
3. Others				4		4		4

ARTICLES.	1905.		1904.		TOTAL.		Increase.	Decrease.
	Up.	Down.	Up.	Down.	1905.	1904.		
	Tons.	Tons.	Tons.	Tons.	Tons.	Tons.	Tons.	Tons.
XXIII.—Railway plant and rolling-stock carried for the Public and Foreign Railways—								
1. Locomotives, Engines, and tenders, and parts thereof.	.....	.....	.....	.....	.....	.....	.....	.....
2. Carriages and trucks, and parts thereof.	.....	.....	.....	.....	.....	.....	.....	.....
3. Materials—								
(a) Steel rails and fish-plates	.....	.....	.....	.....	.....	.....	.....	.....
(b) Sleepers and keys of steel and cast-iron.	.....	.....	.....	.....	.....	.....	.....	.....
(c) Other sorts	2	.....	.....	.....	2	.....	2	.....
XXIV.—Salt	241	.....	242	.....	241	242	.....	1
XXV.—Saltpetre and other saline substances—								
1. Saltpetre	.....	.....	.....	.....	.....	.....	.....	.....
2. Other saline substances	10	.....	11	.....	10	11	.....	1
XXVI.—Silk—								
1. Raw—								
(a) Foreign	.....	.....	.....	.....	.....	.....	.....	.....
(b) Indian	.....	.....	.....	.....	.....	.....	.....	.....
2. Silk piece-goods—								
(a) Foreign	.....	.....	.....	.....	.....	.....	.....	.....
(b) Indian	.....	.....	.....	.....	.....	.....	.....	.....
XXVII.—Spices—								
1. Betelnuts	1	356	3	1,126	357	1,129	.....	772
2. Pepper	.....	.....	.....	.....	.....	1	.....	1
3. Ginger	.....	.....	1	.....	.....	1	.....	1
4. Chillies	37	6	25	.....	43	25	18	.....
5. Cardamoms	.....	.....	.....	.....	.....	.....	.....	.....
6. Others	.....	17	.....	.....	17	.....	17	.....
XXVIII.—Stone and lime	117	.....	18	.....	117	18	99	.....
XXIX.—Sugar—								
1. Refined or crystallised, including sumarandy.	23	.....	44	.....	23	44	.....	21
2. Unrefined—								
(a) Sugar	16	80	5	122	96	127	.....	61
(c) Gur, rab, molasses, jaggery, and other saccharine produce.	1	83	60	118	84	178	.....	94
XXX.—Tea—								
1. Foreign	.....	.....	.....	.....	.....	.....	.....	.....
2. Indian	.....	.....	.....	.....	.....	.....	.....	.....
XXXI.—Tobacco—								
1. Unmanufactured	104	..	126	17	104	143	.....	40
2. Manufactured—								
(a) Cigars	4	.....	3	1	4	4	.....	.....
(b) Other sorts	.....	.....	.....	.....	.....	.....	.....	.....
XXXII.—Wood—								
1. Timber, unwrought	70	286	35	285	356	327	29	.....
2. Manufactures	11	23	9	19	45	28	15	.....
XXXIII.—Wool—								
1. Raw	.....	.....	.....	.....	.....	.....	.....	.....
2. Manufactured—								
(a) Carpets and rugs	.....	.....	.....	.....	.....	.....	.....	.....
(b) Piece-goods, European ...	.....	.....	.....	.....	.....	.....	.....	.....
(c) Ditto, Indian ...	.....	.....	.....	.....	.....	.....	.....	.....
(d) Other sorts of manufactures.	.....	.....	.....	.....	.....	.....	.....	.....
XXXIV.—All other articles of merchandise ...	708	136	234	280	844	635	209	.....
Total ...	5,618	4,809	6,783	6,579	9,627	13,354	787	4,524

H. E. BENTHALL,

Chief Auditor and Accountant.

CALCUTTA, *the 17th April 1905.*

Weekly Return of Traffic Receipts on Indian Railways.

EAST INDIAN RAILWAY.

Approximate Return of Traffic for week ended 1st April 1905 on 1,962·25 miles open.

	Coaching Traffic.		Merchandise and Mineral Traffic.		Other earnings (estimated).	Total earnings.	Traffic Train-miles run.		
	No. of passengers.	Coaching receipts.	Weight carried.	Receipts.			Coaching.	Merchandise.	Total
		Rs. A. P.	Mds. S.	Rs. (a) A. P.	Rs. A. P.	Rs. A. P.			
Total traffic for the week ...	466,455	4,05,745 0 8	68,59,289 0	11,32,362 0 0	32,105 0 0	15,70,202 0 0	116,721	187,609	304,330
Or per mile of railway	.....	206 13 5	.....	577 1 1	16 5 9	800 3 3	... ..	...	...
For previous 12 weeks of half-year	4,930,283*	49,00,016 0 0*	7,74,81,806 0†	1,26,06,737 0 0†	3,87,116 0 0‡	1,83,68,869 0 0	1,394,417§	2,160,321§	†3,555,738
Total for 13 weeks ...	5,396,738	53,05,761 0 0	8,41,33,195 0	1,37,39,099 0 0	4,19,221 0 0	1,99,39,071 0 0	1,511,138	2,347,930	3,857,988
COMPARISON.									
Total for corresponding week of previous year	5,05,758	3,91,528 3 5	68,10,466 30	10,15,961 2 2	26,304 9 1	14,33,654 3 3	117,688	191,088	308,686
Per mile of railway corresponding week of previous year ...	.....	202 4 8	.....	526 2 8	14 9 3	742 0 7	.....	.....	.....
Total for corresponding 13½ weeks of previous year	5,881,228	55,53,041 3 10	8,35,84,788 10	1,34,73,573 0 5	3,91,777 14 2	1,94,17,392 2 5	1,514,971	2,480,642	3,995,613

(a) The increase is chiefly in coal.
* Deducted No. of passengers 857 and
† Do. Mds. 56,496 "
‡ Do.
§ Audited figures up to 18th February 1905.

Rs. 34,661 } On account of difference between the approximate and audited figures for the week ended
" 85,509 } 18th February 1905.
" 1,049 }

1905. *Abstract of progressive weekly returns of all earnings for 1905 in comparison with 1904.*

Open mileage.	Period.	Coaching Traffic.		Merchandise and Mineral Traffic.		Other earnings.	Total.	Per mile of railway.	Train mileage.	
		No. of passengers.	Rs.	Mds.	Rs.	Rs.	Rs.	Rs.	No.	Rate. Rs. A. P.
*1,962·25	Week ended 7th Jan. ...	373,540	3,99,689	66,57,796	11,43,208	29,547	15,64,485	969	297,843	5 4 1
*1,962·25	" " 14th " ...	388,334	4,09,134	61,44,649	11,34,861	29,974	15,33,969	950	307,965	5 2 5
*1,962·25	" " 21st " ...	399,101	4,27,893	69,69,442	11,98,566	34,467	16,60,926	845	299,157	5 5 4
*1,962·25	" " 28th " ...	387,899	3,79,282	71,61,989	11,84,573	33,327	15,97,182	811	293,017	5 3 0
*1,962·25	" " 4th Feb. ...	397,451	3,94,933	68,59,531	10,95,961	31,699	15,15,295	764	296,579	5 1 9
*1,962·25	" " 11th " ...	416,257	4,34,*51	67,34,648	9,76,532	28,989	14,40,513	746	281,548	5 1 11
*1,962·25	" " 18th " ...	407,777	3,96,289	68,57,714	10,17,409	31,113	14,34,782	746	296,561	5 0 0
1,962·25	" " 25th " ...	449,921	4,09,991	68,51,514	10,30,917	32,755	14,93,573	773	300,046	5 0 8
1,962·25	" " 4th Mar. ...	490,981	4,48,215	61,96,902	10,29,947	32,427	15,30,589	780	295,464	5 2 10
1,962·25	" " 11th " ...	476,227	4,42,281	59,65,928	10,30,946	31,484	15,15,704	774	296,567	5 1 5
1,962·25	" " 18th " ...	513,708	4,66,791	69,45,131	11,23,227	36,346	15,63,369	797	292,478	5 5 7
1,962·25	" " 25th " ...	395,846	3,76,786	68,51,221	11,21,461	33,650	15,31,617	780	291,979	5 1 5
1,962·25	" " 1st April ...	466,455	4,05,745	68,59,289	11,32,362	32,105	15,70,202	800	304,330	5 2 7
	Totals up to date ...	5,396,738	53,05,761	8,41,33,195	1,37,39,099	4,19,221	1,99,39,071	799	3,857,988	5 2 7

Abstract of progressive weekly returns of all earnings for 1905 in comparison with 1904—concluded. 1904

		No. of passengers.	Rs.	Mds.	Rs.	Rs.	Rs.	Rs.	No.	Rate. Rs. A. P.
1,954·45	First 9 days of Jan. ...	461,139	4,35,618	79,11,919	13,96,318	36,694	17,91,611	926	278,923	6 11 8
1,954·45	Week ended 16th " ...	423,464	3,99,314	61,02,395	9,99,469	31,739	14,30,523	740	291,091	6 14 5
1,954·45	" " 23rd " ...	420,145	4,40,264	58,34,238	9,72,799	29,869	14,42,732	748	291,713	6 14 10
1,954·45	" " 30th " ...	449,819	4,21,946	59,70,224	10,05,393	28,279	14,55,721	750	289,788	6 13 5
1,954·45	" " 6th Feb. ...	436,191	4,33,908	66,65,167	10,84,781	29,389	15,48,078	809	303,477	5 1 1
1,954·45	" " 13th " ...	426,870	4,15,179	68,56,999	14,06,101	30,487	14,51,727	750	295,953	6 14 3
1,954·45	" " 20th " ...	460,296	4,44,971	65,97,285	10,54,190	31,558	15,30,714	791	294,105	5 0 6
1,954·45	" " 27th " ...	461,857	4,49,795	66,22,961	10,35,099	29,956	15,14,829	785	300,033	6 13 5
1,954·45	" " 5th Mar. ...	491,443	3,79,844	66,09,979	9,73,971	29,215	14,03,030	725	300,734	6 8 5
1,954·45	" " 12th " ...	445,294	4,12,994	66,27,353	10,19,113	29,031	15,01,138	776	298,303	5 0 6
1,954·45	" " 19th " ...	419,963	4,07,151	68,34,190	10,09,296	28,946	14,74,993	761	296,676	6 13 9
1,954·45	" " 26th " ...	347,207	4,78,502	67,10,993	10,06,201	31,106	14,43,969	746	299,632	6 13 1
1,954·45	" " 2nd April ...	366,536	3,91,988	68,10,466	10,13,961	28,304	14,33,654	742	300,686	6 10 5
	Totals up to date ...	5,061,200	53,39,941	8,35,54,750	1,34,73,573	3,91,778	1,94,17,291	756	3,995,613	6 13 9

* Audited figures.

TARKESSUR BRANCH RAILWAY.

Approximate Return of Traffic for week ended 1st April 1905 on 22·23 miles open.

	Coaching Traffic.		Merchandise and Mineral Traffic.		Other earnings (estimated).	Total earnings.	Traffic Train-miles run.		
	No. of passengers.	Coaching receipts.	Weight carried.	Receipts.			Coaching.	Merchandise.	Total.
		Rs. A. P.	Mds. S.	Rs. A. P.	Rs. A. P.	Rs. A. P.			
Total traffic for the week ...	34,873	6,018 0 0	17,362 9	724 0 0	8 0 0	6,750 0 0	968	225	1,193
Or per mile of railway ...	.....	270 11 6	.....	32 9 1	0 5 9	303 10 4	.....	.....	.....
For previous 12 weeks of half-year	296,863*	70,293 0 0*	12,30,964 0†	9,213 0 0†	83 0 0‡	79,589 0 0	11,550§	2,685§	14,235
Total for 13 weeks ...	331,736	76,311 0 0	2,48,326 9	9,937 0 0	91 0 0	86,339 0 0	12,518	2,910	15,428
Comparison.									
Total for corresponding week of previous year.	35,594	6,335 4 11	26,683 10	1,078 0 0	9 7 9	7,422 12 8	968	176	1,144
Per mile of railway corresponding week of previous year.	.....	284 15 10	.....	48 7 11	0 6 9	333 14 6	.....	.....	.....
Total for corresponding 13½ weeks of previous year.	334,234	82,659 2 1	2,96,070 20	10,697 5 0	103 15 0	93,459 6 1	13,926	2,178	16,104

* Added No. of passengers 347 and Rs. 66
† Do. Mds. 2,645 and ,, 32
‡ Deducted . Rs. 1
} On account of difference between the approximate and audited figures for the week ended 18th February 1905.

§ Audited figures up to 18th February 1905.

1905. *Abstract of progressive weekly returns of all earnings for 1905 in comparison with 1904.*

Open mileage.	Period.	Coaching Traffic.		Merchandise and Mineral Traffic.		Other earnings.	Total.	Per mile of railway.	Train mileage.	
		No. of passengers.	Rs.	Mds.	Rs.	Rs.	Rs.	Rs.	No.	Rate. Rs. A. P.
*22·23	Week ended 7th Jan. ..	29,310	4,796	21,898	985	6	5,897	268	1,193	4 15 5
*22·23	.. .. 14th	21,852	4,961	18,782	676	4	5,637	249	1,193	4 10 7
*22·23	.. .. 21st	22,861	5,208	23,686	844	6	6,138	276	1,193	5 2 5
*22·23	.. .. 28th	21,754	4,904	19,716	726	7	5,737	258	1,193	4 14 1
*22·23	.. .. 4th Feb. ...	20,946	4,688	18,613	648	11	5,351	236	1,193	4 6 9
*22·23	.. .. 11th	21,317	5,152	20,771	837	11	6,000	270	1,193	5 0 10
*22·23	.. .. 18th	19,427	4,329	18,269	833	8	5,170	233	1,193	4 9 8
22·23	.. .. 25th	22,257	5,067	24,921	1,053	8	6,031	271	1,193	5 13 2
22·23	.. .. 4th Mar. ...	20,257	5,039	17,806	941	6	5,976	451	1,193	5 1 4
22·23	.. .. 11th	21,988	5,166	18,168	730	5	5,841	263	1,193	4 7 1
22·23	.. .. 18th	22,697	5,187	17,896	839	7	7,033	316	1,193	5 14 7
22·23	.. .. 25th	24,290	5,715	18,469	654	8	6,379	287	1,193	5 5 11
22·23	.. .. 1st April ...	24,573	6,013	17,332	734	8	6,750	304	1,193	5 10 11
	Totals up to date ...	331,736	76,311	2,48,326	9,937	91	86,339	290	15,483	5 9 7

Abstract of progressive weekly returns of all earnings for 1905 in comparison with 1904—concluded. 1904.

	No. of passengers.	Rs.	Mds.	Rs.	Rs.	Rs.	Rs.	No.	Rate. Rs. A. P.
First 9 days of Jan. ...	32,120	6,200	26,200	1,003	14	7,248	328	1,540	4 11 8
Week ended 16th	19,765	4,453	17,006	902	9	5,074	229	1,193	4 4 6
.. .. 23rd	21,694	5,220	18,708	708	8	5,930	267	1,193	5 0 0
.. .. 30th	24,156	5,834	23,263	774	1	6,613	297	1,193	5 8 1
.. .. 6th Feb. ...	28,624	7,022	24,728	794	3	7,879	334	1,193	6 10 1
.. .. 13th	23,670	6,151	20,371	689	6	6,916	306	1,230	5 8 6
.. .. 20th	39,816	10,081	23,300	736	4	11,307	513	1,468	7 9 11
.. .. 27th	25,892	6,144	24,780	886	10	7,088	317	1,193	5 15 6
.. .. 5th Mar. ...	28,709	6,721	18,197	694	6	7,611	355	1,193	6 3 10
.. .. 12th	34,231	8,198	27,319	963	7	9,056	313	1,193	5 13 5
.. .. 19th	28,488	6,263	26,600	1,042	11	7,356	330	1,193	6 2 5
.. .. 26th	23,164	5,499	19,903	774	15	6,278	283	1,193	5 6 7
.. .. 2nd April ...	30,694	6,338	26,004	1,070	9	7,422	334	1,144	6 7 10
Totals up to date ...	334,234	82,659	2,96,971	10,697	103	93,459	316	16,104	5 13 10

* Audited figures.

DELHI-UMBALLA-KALKA RAILWAY.

Approximate Return of Traffic for week ended 1st April 1905 on 162·36 miles open.

	Coaching Traffic.		Merchandise and Mineral Traffic.		Other earnings (estimated).	Total earnings.	Traffic Train-miles run.		
	No. of passengers.	Coaching receipts.	Weight carried.	Receipts.			Coaching.	Merchandise	Total.
		Rs. A. P.	Mds. S.	Rs. A. P.	Rs. A. P.	Rs. A. P.			
Total traffic for the week ...	21,229	30,449 0 0	1,23,278 0	14,342 0 0	98 0 0	44,889 0 0	10,065	4,081	14,166
Or per mile of railway	.....	187 8 8	—	88 5 4	0 9 8	276 7 8	.....	.....	.....
Per previous 13 weeks of half-year	971,890*	2,16,261 0 0*	15,47,168 0†	1,72,066 0 0†	1,225 0 0‡	3,89,513 0 0	110,879§	45,056§	155,935
Total for 18 weeks ...	302,919	2,46,650 0 0	16,71,040 0	1,86,438 0 0	1,223 0 0	4,34,401 0 0	120,944	49,137	170,101
COMPARISON.									
Total for corresponding week of previous year...	23,736	36,823 4 10	1,71,633 0	17,009 13 0	76 1 3	43,908 3 1	9,639	4,114	13,743
Per mile of railway corresponding week of previous year ...	.....	165 3 3	.....	104 12 3	0 7 6	270 7 0	.....	.....	.....
Total for corresponding 13 weeks of previous year ...	354,370	2,63,716 7 1	17,40,671 20	1,70,740 5 0	796 3 3	4,35,250 14 4	131,237	48,348	180,185

* Added No. of passengers 456 and deducted Rs. 1,213 } On account of difference between the approximate and audited figures for the week ended 18th February
† Deducted Mds. 13,796 and added " 2,414 } 1905.
‡ Added " 35
§ Audited figures up to 18th February 1905.

1905. *Abstract of progressive weekly returns of all earnings for 1905 in comparison with 1904.*

Open mileage.	Period.	Coaching Traffic.		Merchandise and Mineral Traffic.		Other earnings.	Total.	Per mile of railway.	Train mileage.	
		No. of passengers.	Rs.	Mds.	Rs.	Rs.	Rs.	Rs.	No.	Rate. Rs. A. P.
*162·36	Week ended 7th Jan. ...	21,229	30,449	1,23,278	14,342	98	44,889	276	14,166	3 2 9
*162·36	" " 14th " ...	21,276	29,886	1,16,285	13,268	107	43,261	266	13,906	3 7 9
*162·36	" " 21st " ...	20,051	28,773	1,20,260	13,846	109	42,728	264	13,613	3 2 10
*162·36	" " 28th " ...	22,089	17,668	1,05,607	17,714	115	34,897	215	13,968	2 10 1
*162·36	" " 4th Feb. ...	21,472	15,996	1,07,193	11,313	79	27,378	168	12,731	2 3 3
*162·36	" " 11th " ...	21,151	17,040	1,74,272	17,541	114	34,104	210	12,880	2 11 10
*162·36	" " 18th " ...	23,158	16,982	1,37,612	16,071	119	33,702	204	13,241	2 7 11
162·36	" " 25th " ...	24,206	19,071	1,34,644	13,876	98	33,045	204	13,048	2 8 10
162·36	" " 4th Mar. ...	23,641	16,734	1,01,276	14,774	97	31,607	207	13,091	2 10 4
162·36	" " 11th " ...	24,269	18,407	1,33,003	13,893	104	32,313	205	13,793	2 9 8
162·36	" " 18th " ...	24,647	20,727	1,35,102	13,820	100	34,647	213	13,700	2 11 8
162·36	" " 25th " ...	23,554	18,780	1,41,467	14,268	98	33,213	199	13,164	2 7 3
162·36	" " 1st April ...	21,229	30,449	1,23,278	14,342	98	44,889	276	14,166	3 2 9
	Totals up to date ...	302,919	2,46,650	19,71,040	1,86,435	1,223	4,34,401	220	170,101	2 8 10

Abstract of progressive weekly returns of all earnings for 1905 in comparison with 1904—concld. *1904.*

		No. of passengers.	Rs.	Mds.	Rs.	Rs.	Rs.	Rs.	No.	Rate. Rs. A. P.
162·36	First 9 days of Jan. ...	24,246	28,472	1,05,220	13,543	83	38,076	216	13,646	2 1 11
162·36	Week ended 14th " ...	18,166	13,209	97,907	12,697	81	25,708	166	12,769	2 1 6
162·36	" " 21st " ...	18,216	14,797	1,02,538	11,627	44	26,336	169	12,954	2 0 6
162·36	" " 28th " ...	20,113	18,196	2,06,440	15,261	99	34,056	210	13,461	2 9 9
162·36	" " 4th Feb. ...	20,613	16,244	1,35,196	13,896	51	27,899	172	13,532	2 5 1
162·36	" " 11th " ...	20,510	17,060	1,41,117	13,811	59	30,930	184	13,548	2 5 10
162·36	" " 18th " ...	21,899	19,060	1,49,894	12,316	62	31,338	193	13,747	2 7 4
162·36	" " 25th " ...	22,263	19,827	1,35,998	15,005	46	34,895	214	13,993	2 11 8
162·36	" " 4th Mar. ...	21,770	20,284	1,39,604	10,984	61	31,357	198	13,193	2 6 1
162·36	" " 11th " ...	23,498	22,170	98,548	10,468	84	32,722	207	14,630	2 5 3
162·36	" " 18th " ...	76,677	46,411	87,040	11,918	183	57,512	364	17,220	3 4 10
162·36	" " 25th " ...	31,677	27,824	1,30,220	15,967	101	43,892	284	15,142	2 13 4
162·36	" " 1st April ...	25,736	23,223	1,71,683	17,010	76	40,309	270	15,743	2 9 1
	Totals up to date ...	354,370	2,63,714	17,40,672	1,70,740	796	4,35,250	211	180,185	2 8 5

* Audited figures.

SOUTH BEHAR RAILWAY.

Approximate Return of Traffic for week ended 1st April 1905 on 78·76 miles open.

	Coaching Traffic.		Merchandise and Mineral Traffic.		Other earnings (estimated).	Total earnings.	Traffic Train-miles run.		
	No. of passengers.	Coaching receipts.	Weight carried.	Receipts.			Coaching.	Merchandise.	Total.
		Rs. A. P.	Mds. S.	Rs. A. P.	Rs. A. P.	Rs. A. P.			
Total traffic for the week ..	14,939	7,214 0 0	49,365 0	3,639 0 0	34 0 0	10,887 0 0	1,633	1,103	2,736
Or per mile of railway ..	....	91 9 6	....	46 3 3	0 6 11	138 3 3	....	....	....
For previous 13 weeks of half-year.	162,945*	82,862 0 0*	6,31,660 0†	36,771 0 0†	864 0 0‡	1,19,997 0 0	20,295§	13,196§	33,491
Total for 13 weeks ...	177,884	90,076 0 0	6,81,025 0	40,410 0 0	898 0 0	1,30,884 0 0	21,928	19,299	41,187
COMPARISON.									
Total for corresponding week of previous year.	11,462	5,853 15 11	73,773 20	5,160 10 0	30 11 0	10,745 4 11	1,746	1,090	2,835
Per mile of railway corresponding week of previous year.	....	70 8 3	....	65 8 5	0 6 3	136 8 11	....	....	....
Total for corresponding 13 weeks of previous year.	174,289	88,086 6 10	10,72,088 20	60,289 15 0	444 10 9	1,48,871 0 7	21,610	15,803	37,413

* Added No. of passengers 1,681 and
† Deducted Mds. 8,294 and
‡ Added
§ Audited figures up to 18th February 1905.

Rs. 1,334 } On account of difference between the approximate and audited figures for the week ended 18th
" 169 } February 1905.
" 16

1905. *Abstract of progressive weekly returns of all earnings for 1905 in comparison with 1904.*

Open mileage.	Period.	Coaching Traffic. No. of passengers.	Coaching Traffic. Rs.	Merchandise and Mineral Traffic. Mds.	Merchandise and Mineral Traffic. Rs.	Other earnings. Rs.	Total. Rs.	Per mile of railway. Rs.	Train mileage. No.	Rate. Rs. A. P.
*78·76	Week ended 7th Jan. ..	14,187	6,906	58,906	3,649	24	9,889	125	2,671	3 11 6
*78·76	.. .. 14th	12,404	5,946	62,970	3,823	33	9,802	124	2,508	3 15 6
*78·76	.. .. 21st	12,246	6,123	58,437	3,630	23	9,806	114	2,508	3 11 6
*78·76	.. .. 28th	12,209	6,080	56,397	3,515	25	9,640	114	2,257	3 13 4
*78·76	.. .. 4th Feb. ..	13,443	6,170	60,646	3,823	25	10,017	125	2,415	3 15 2
*78·76	.. .. 11th	13,799	6,698	61,864	3,897	23	9,538	121	2,705	3 8 6
*78·76	.. .. 18th	14,632	6,649	56,634	3,501	20	11,200	150	2,227	3 9 5
78·76	.. .. 25th	15,274	8,151	60,892	3,815	22	11,278	144	2,208	3 7 6
78·76	.. .. 4th March ..	15,865	7,792	65,208	3,915	23	10,135	129	2,208	3 1 6
78·76	.. .. 11th	13,894	6,980	62,913	3,936	25	9,963	126	2,214	3 6 6
78·76	.. .. 18th	13,644	6,874	63,150	3,999	26	9,891	118	2,228	3 15 6
78·76	.. .. 25th	13,886	7,164	67,681	3,979	26	10,469	133	2,754	3 13 9
78·76	.. .. 1st April ..	14,939	7,214	69,365	3,639	34	10,887	138	2,736	3 15 2
	Totals up to date ...	177,884	90,076	6,81,025	40,410	898	1,30,884	126	41,187	3 3 11

Abstract of progressive weekly returns of all earnings for 1905 in comparison with 1904—concluded. 1904.

		No. of passengers.	Rs.	Mds.	Rs.	Rs.	Rs.	Rs.	No.	Rate. Rs. A. P.
78·76	First 9 days of Jan. ..	11,888	7,106	69,119	4,092	36	11,231	150	3,000	3 9 6
78·76	Week ended 16th	11,888	5,811	62,913	3,627	24	9,972	114	2,203	3 12 9
78·76	.. .. 23rd	13,602	6,899	64,637	4,243	17	11,159	148	2,880	4 4 3
78·76	.. .. 30th	13,214	6,949	68,756	4,161	26	10,276	132	2,760	3 12 3
78·76	.. .. 6th Feb. ..	13,602	6,456	60,201	4,149	26	10,713	136	2,631	3 10 6
78·76	.. .. 13th	13,883	6,915	60,522	4,119	24	11,058	140	2,726	4 0 2
78·76	.. .. 20th	14,488	7,377	1,18,031	3,631	27	11,735	149	2,883	3 14 9
78·76	.. .. 27th	13,874	7,338	69,486	4,173	44	11,735	149	2,670	4 6 3
78·76	.. .. 5th March ..	13,104	7,228	69,698	4,061	70	11,360	144	2,968	3 12 10
78·76	.. .. 12th	13,608	7,841	1,27,127	7,196	80	14,717	187	3,230	4 8 11
78·76	.. .. 19th	14,084	7,689	94,871	5,121	48	12,872	166	3,187	3 16 2
78·76	.. .. 26th	13,448	6,313	1,08,168	5,776	87	13,116	164	2,736	4 4 9
78·76	.. .. 2nd April ..	11,888	5,868	73,774	5,101	31	10,745	136	2,835	3 12 9
	Totals up to date ...	174,289	88,086	10,72,088	60,289	445	1,48,921	142	37,413	3 15 8

* Audited figures.

EASTERN BENGAL STATE RAILWAY.

(Including N. B., K.-D., Behar, Dacca, B.-S. B., and R.-K. L. Railways.)

Approximate Return of Traffic and Mileage for the week ended 1st April 1905 on 971 miles open.

	Coaching Traffic.		Merchandise and Mineral Traffic.		Other earnings (including ferry).	Total earnings.	Traffic Train-miles run.		
	No. of passengers.	Coaching receipts.	Weight carried.	Receipts.			Coaching.	Merchandise.	Total.
		Rs. A. P.	Mds. s.	Rs. A. P.	Rs. A. P.	Rs. A. P.			
Total traffic for the week ...	260,740	1,47,060 0 0	13,83,490 0	1,46,020 0 0	16,820 0 0	3,11,900 0 0	43,096	35,467	78,453
Or per mile of railway ...	269	151 0 0	1,252 0	150 0 0	†11 0 0	†314 0 0	.....	.....	.....
For previous 13 weeks of half-year*	3,373,644	16,78,393 0 0	1,26,16,347 0	17,79,796 0 0	2,66,214 0 0	37,41,245 0 0	551,914	457,988	989,302
Total for 13 weeks ...	3,634,384	18,25,393 0 0	1,41,00,767 0	19,27,816 0 0	3,03,034 0 0	40,53,145 0 0	594,940	473,795	1,067,735
Comparison.									
Total for corresponding week of previous year	270,829	1,35,761 0 0	14,78,609 0	1,39,733 0 0	16,947 0 0	3,12,440 0 0	41,347	39,839	81,086
Per mile of railway corresponding week of previous year (967 miles)	283	146 0 0	1,542 0	147 0 0	11 0 0	320 0 0	.....	.....	.....
Total to corresponding date of previous year	3,533,135	16,95,393 0 0	1,36,65,806 0	23,03,746 0 0	3,23,031 0 0	43,16,790 0 0	636,801	445,274	1,081,875

* Audited up to week ending 4th February 1905.
† Excluding ferry earnings, Rs. 6,880.

DACCA STATE RAILWAY.

Approximate Return of Traffic and Mileage for the week ended 1st April 1905 on 86 miles open.

	Coaching Traffic.		Merchandise and Mineral Traffic.		Other earnings.	Total earnings.	Traffic Train-miles run.		
	No. of passengers.	Coaching receipts.	Weight carried.	Receipts.			Coaching.	Merchandise.	Total.
		Rs. A. P.	Mds. s.	Rs. A. P.	Rs. A. P.	Rs. A. P.			
Total traffic for the week ...	36,810	9,888 0 0	1,49,980 0	8,810 0 0	180 0 0	17,450 0 0	2,880	1,888	4,178
Or per mile of railway	349	105 0 0	1,733 0	98 0 0	2 0 0	205 0 0	.....	.....	.....
For previous 13 weeks of half-year*	345,486	1,06,307 0 0	2,76,779 0	33,376 0 0	2,220 0 0	1,41,342 0 0	23,708	19,670	43,378
Total for 13 weeks ...	375,616	1,15,887 0 0	5,25,259 0	49,186 0 0	2,679 0 0	1,58,833 0 0	26,588	21,558	47,646
Comparison.									
Total for corresponding week of previous year	27,884	9,614 0 0	1,93,445 0	8,413 0 0	219 0 0	17,946 0 0	2,614	2,109	4,723
Per mile of railway corresponding week of previous year ...	324	109 0 0	1,773 0	98 0 0	3 0 0	201 0 0	.....	.....	.....
Total to corresponding date of previous year	427,976	1,20,781 0 0	6,25,097 0	46,759 0 0	3,269 0 0	1,76,809 0 0	27,286	23,575	50,860

* Audited up to week ending 4th February 1905.

COOCH BEHAR STATE RAILWAY.

Approximate Return of Traffic and Mileage for the week ended 1st April 1905 on 33·6 miles open.

	Coaching Traffic.		Merchandise and Mineral Traffic.		Other earnings (including ferry).	Total earnings.	Traffic Train-miles run.		
	No. of passengers.	Coaching receipts.	Weight carried.	Receipts.			Coaching.	Merchandise.	Total.
		Rs. A. P.	Mds. s.	Rs. A. P.	Rs. A. P.	Rs. A. P.			
Total traffic for the week ...	4,730	1,290 0 0	3,09,450 0	7,710 0 0	.....	9,000 0 0	486	1,466†	1,950
Or per mile of railway ...	140	38 0 0	9,210 0	215 0 0	.....	270 0 0	...	...	...
For previous 13 weeks of half-year*	37,067	13,976 0 0	3,16,463 0	14,280 0 0	130 0 0	28,386 0 0	5,977	20,866	26,843
Total for 13 weeks ...	41,797	17,466 0 0	6,25,913 0	21,990 0 0	130 0 0	39,386 0 0	6,713	22,332	27,745
Comparison.									
Total for corresponding week of previous year ...	3,688	1,130 0 0	10,69,801 0	17,674 0 0	20 0 0	18,849 0 0	441	1,346	1,787
Per mile of railway corresponding week of previous year ...	90	34 0 0	31,982 0	526 0 0	1 0 0	561 0 0	...	...	...
Total to corresponding date of previous year	48,366	16,890 0 0	13,19,227 0	39,784 0 0	215 0 0	57,889 0 0	6,256	21,130	27,386

* Audited up to week ending 4th February 1905.
† Ballast train-miles 1,016.

MYMENSINGH-JAGANNATHGANJ RAILWAY.

Approximate Return of Traffic and Mileage for the week ended 1st April 1905 on 51 37 miles open.

	Coaching Traffic.		Merchandise and Mineral Traffic.		Other earnings (including ferry).	Total earnings.	Traffic Train-miles run.		
	No. of passengers	Coaching receipts.	Weight carried.	Receipts.			Coaching.	Merchandise.	Total.
		Rs. A. P.	Mds. S.	Rs. A. P.	Rs. A. P.	Rs. A. P.			
Total traffic for the week	3,020	2,000 0 0	36,400 0	1,200 0 0	60 0 0	3,060 0 0	1,033	396	1,428
Or per mile of railway ...	156	53 0 0	709 0	23 0 0	1 0 0	77 0 0	.....	.....	.....
For previous 12 weeks of half-year*	90,311	28,736 0 0	1,87,914 0	9,120 0 0	185 0 0	38,041 0 0	12,385	4,829	17,214
Total for 13 weeks ...	93,331	31,426 0 0	1,94,314 0	10,320 0 0	245 0 0	41,901 0 0	13,417	5,225	18,642
Comparison.									
Total for corresponding week of previous year	10,456	3,680 0 0	41,323 0	1,350 0 0	57 0 0	4,087 0 0	1,060	396	1,456
Per mile of railway corresponding week of previous year	196	51 0 0	784 0	26 0 0	1 0 0	78 0 0	.....	.....	.....
Total to corresponding date of previous year	135,710	46,710 0 0	3,02,159 0	16,762 0 0	421 0 0	63,893 0 0	13,747	9,120	22,867

* Audited up to week ending 4th February 1905.

BENGAL AND NORTH-WESTERN RAILWAY.

Approximate Return of Traffic for the week ending 1st April 1905 on 1,467 miles open.

	Coaching Traffic.		Merchandise and Mineral Traffic		Other earnings (estimated), including steam-boat.	Total earnings.	Traffic Train-miles run.		
	Number of passengers.	Receipts.	Weight carried.	Receipts			Coaching.	Merchandise.	Total.
		Rs.	Mds.	Rs.	Rs.	Rs.			
Total traffic for the week on 1,467 miles open	249,290	(a)1,61,000	10,55,720	(b)1,22,720	(c)20,690	2,51,500	42,028	(d)41 068	83,090
Or per mile of railway	170·00	65·91	726·67	83 65	14 10	171 46	.....	.....	.....
For previous 13 weeks of half-year (e)	2,781,893	11,78,760	1,25,22,344	14,19,388	2,49,498	30,47,990	513,234	516,715	1,029,949
Total for 13 weeks ...	3,031,183	13,79,850	1,35,87,974	17,42,313	2,70,278	33,99,490	555,262	557,777	1,113,039
Comparison.									
Total for corresponding week of previous year on 1,366 miles open	214,461	1,03,556	9,62,548	1,18,377	13,819	2,40,766	41,393	(f)38,907	80,300
Per mile of corresponding week of previous year	156·50	74·09	679·36	85·29	13·56	173·45	...	.....	.....
Total to corresponding date of previous year	2,985,364	13,66,256	1,34,15,269	17,23,117	2,66,735	33,75,696	555,255	511,914	1,066 169

(a) Increase in number with decrease in amount due to shorter lead traffic and to the inclusion of Tibet special trains in the corresponding period last year.
(b) Ditto chiefly under local traffic.
(c) Ditto principally under sundries.
(d) Includes 4,389 miles of ballast trains.
(e) Ditto audited figures up to week ending 18th February 1905.
(f) Ditto 4,762 miles of ballast trains.

BENGAL CENTRAL RAILWAY COMPANY, LIMITED.

Approximate Return of Traffic and Mileage for the week ended 1st April 1905 on 139 miles open.

	Coaching Traffic.		Merchandise and Mineral Traffic.		Other earnings.	Total earnings.	Traffic Train-miles run.		
	Number of passengers.	Coaching receipts.	Weight carried.	Receipts.			Coaching.	Merchandise.	Total.
		Rs. A. P.	Mds. S.	Rs. A. P.	Rs. A. P.	Rs. A. P.			
Total traffic for the week ...	43,261	17,632 0 0	81,533 0	6,672 0 0	130 0 0	23,554 0 0	4,074	3,332	7,406
Or per mile of railway	309	†126 0 0	587 0	44 0 0	1 0 0	181 0 0	.....	.....	.....
For previous 13 weeks of half-year*	473,673	1,91,368 0 0	6,81,396 0	70,210 0 0	45 951 0 0	3,08,729 0 0	53,450	36,136	89,586
Total for 13 weeks	516,934	2,09,000 0 0	9,62,929 0	76,882 0 0	46,151 0 0	3,30,283 0 0	57,524	40,068	97,592
Comparison									
Total for corresponding week of previous year	40,139	15,680 0 0	79,461 0	6,410 0 0	262 0 0	22,332 0 0	4,533	3,371	7,904
Per mile of railway corresponding week of previous year	289	†116 0 0	573 0	39 0 0	1 0 0	156 0 0	... ...	.....	.....
Total to corresponding date of previous year ...	532,661	2,16,913 0 0	13,99,936 0	98,197 0 0	53,466 0 0	3,68,113 0 0	63,148	36,219	99,367

* Audited up to week ended 11th February 1905.
† Coaching traffic calculated on 139 miles only.

ASSAM-BENGAL RAILWAY.

Approximate Return of traffic for the week ended 1st April 1905 on 737 miles open for all descriptions of traffic, and an additional 3 miles for goods traffic only.

	Coaching Traffic.		Merchandise and Mineral Traffic.		Other earnings (estimated), including steam boat.	Total earnings.	Traffic Train-miles run.		
	No. of passengers.	Coaching receipts.	Weight carried.	Receipts.			Coaching.	Merchandise.	Total.
		Rs. A. P.	Mds. S.	Rs. A. P.	Rs. A. P.	Rs. A. P.			
Total traffic for the week ...	49,798	30,513 0 0	1,98,338 0	21,415 0 0	2,221 0 0	54,149 0 0	10,366	15,247	25,613
Or per mile of railway	67·67	41·40	813·06	28·94	2·14	73 46	13·93	20·60	34·53
For previous 12 weeks of half-year	587,186	3,96,493 0 0	19,09,370 0	3,07,300 0 0	31,415 0 0	7,34,208 0 0	125,788	181,960	307,738
Total for 13 weeks ...	636,984	4,26,906 0 0	20,67,707 0	3,28,715 0 0	33,736 0 0	7,88,457 0 0	136,054	197,197	333,251
COMPARISON.									
Total for corresponding week of previous year	39,293	26,607 0 0	1,11,781 0	21,337 0 0	691 0 0	48,635 0 0	10,748	13 945	25,690
Per mile of railway corresponding week of previous year ...	53·36	36·10	151·66	28·96	0·91	66·73	14·58	17·49	32·07
Total to corresponding date of previous year	616,104	4,06,451 0 0	19,97,388 0	2,95,471 0 0	35,648 0 0	7,37,568 0 0	116,478	148,717	265,196

FINANCIAL YEAR.

Approximate Statement of Gross Receipts of the Assam-Bengal Railway.

Receipts for week ending 1st April 1905.			Receipts for week ending 2nd April 1904.			Total receipts from 1st April 1904 to 31st March 1905.			Total receipts from 1st April 1903 to 31st March 1904.			Total increase in 1905.	Total decrease in 1905.
Mean mileage worked.	Receipts.	Per mile worked.	Mean mileage worked.	Receipts.	Per mile worked.	Mean mileage worked.	Total receipts.	Per mile worked per week.	Mean mileage worked.	Total receipts.	Per mile worked per week.		
	Rs.	Rs.		Rs.	Rs.		Rs.			Rs.		Rs.	
740	54,149	73·16	740	48,635	65·73	740	20,68,728	...	740	25,68,251	...	4,24,897	...

DARJEELING-HIMALAYAN RAILWAY COMPANY, LIMITED

			Rs. A. P.	Rs. A. P.
Approximate earnings for the week ending 8th April 1905	...	Coaching ...	7,833 0 0	16,924 0 0
		Goods ...	9,018 0 0	
		Other earnings ...	73 0 0	
Audited earnings for the corresponding period of 1904	...	Coaching ...	8,554 0 0	30,285 0 0
		Goods ...	11,654 0 0	
		Other earnings ...	77 0 0	
		Decrease ...		3,361 0 0
Receipts per mile for the week ending 8th April 1905	...	...	...	331 13 6
Ditto for the corresponding period of 1904	...	...	...	397 12 1
		Decrease ...		65 14 7
Receipts from 1st January to 8th April 1905	...	...	...	2,07,304 0 0
Ditto for the corresponding period of 1904	...	...	...	2,35,752 0 0
		Decrease ...		28,448 0 0

Printed at the Printing Office, and published by the Book Depôt, of the Bengal Secretariat, Writers' Buildings, in the City of Calcutta, on 19th April 1905.

REGISTERED No. C209.]

No. 17 of 1905.

The Calcutta Gazette.

WEDNESDAY, APRIL 26, 1905.

CONTENTS.

	Page
PART I.—Orders and Notifications by the Lieutenant-Governor of Bengal, the High Court, Government Treasury, etc.	761—806
PART IA.—Orders and Notifications by the Government of India	86—96
PART IB.—Orders by the Lieutenant-Governor of Bengal	71—73
PART II.—Advertisements	461—475
PART III.—Acts of the Bengal Council	Nil
PART IV.—Bills of the Bengal Council	Nil
PART IVA.—Proceedings of the Bengal Legislative Council	Nil
PART V.—Acts of the Governor-General's Council assented to by the Governor-General	Nil
PART VI.—Bills introduced into the Council of the Governor-General for making Laws and Regulations or published under Rule 23	Nil
APPENDIX.—Marine Notifications	127—134
APPENDIX.—List of persons liable to serve on Common and Special Juries in the High Court for the year 1906	1—120
SUPPLEMENT No. 17:—	
Resolution on the Howrah Bridge Budget Estimate for the year 1905-06	613
Statistical Return of Crops, Prices-Current, Circular and Eastern Canals, Area leased, Irrigation Operation of Fasl Kharif, 1904-05 Vital Statistics, Results of Meteorological Observations, Railway Traffic Receipts, etc., etc.	615—642

PART I.

Orders and Notifications by the Lieutenant-Governor of Bengal, the High Court, Government Treasury, &c.

ORDERS BY THE LIEUT.-GOVERNOR OF BENGAL.

No. 2827A.

APPOINTMENTS AND TRANSFERS.

GENERAL.—*No. 300A.D.—The 22nd April 1905.*—Mr. S. R. Hignell, Officiating Joint-Magistrate and Deputy Collector, on special duty, is appointed to act, until further orders, as Deputy Commissioner of Palamau.

Calcutta.
Palamau.

No. 306A.D.—The 22nd April 1905.—Mr. F. W. Ward, Officiating Joint-Magistrate and Deputy Collector, Begusarai, Monghyr, is appointed to act, until further orders, as Magistrate and Collector of Pabna.

Monghyr.
Pabna.

No. 308A.D.—The 22nd April 1905.—Mr. S. N. Mackenzie, Assistant Magistrate and Collector, Midnapore, is appointed to have charge of the Begusarai subdivision of the Monghyr district.

Midnapore.
Monghyr.

No. 311A.D.—The 22nd April 1905.—Babu Sasi Bhusan Chaudhuri, Subordinate Judge and Assistant Sessions Judge, Rangpur, is appointed to act temporarily as District and Sessions Judge of that district.

Rangpur.

EDUCATION.—*No. 331A.D.—The 24th April 1905.*—Babu Bhagavati Sahay, Officiating Assistant Inspector of Schools, Patna Division (class VII of the Provincial Educational Service), is appointed to act, in addition to his own duties, as Inspector of Schools, Patna Division, during the absence, on leave, of Mr. W. Billing, or until further orders.

Patna.

ECCLESIASTICAL.—*No. 352A.D.—The 25th April 1905.*—The services of the Revd. Canon Alfred Saunders Dyer, a Chaplain on the Calcutta (Bengal) Ecclesiastical Establishment, are placed at the disposal of the Government of India in the Home Department, with effect from the 27th April 1905

No. 270A.D.—The 20th April 1905.—The Revd. John Ireland Hasler, of the Baptist Missionary Society, Monghyr, is authorised, under section 6 of Act XV of 1872, to solemnise marriages between persons one of whom is a Christian or both of whom are Christians, and under section 9 of the same Act to grant certificates of marriage between persons who are Native Christians.

Monghyr.

The Revd. J. I. Hasler is also appointed, under Act VI of 1886, to be a Registrar of Births and Deaths in Monghyr.

PROMOTIONS.

GENERAL.—*No. 265A.D.—The 20th April 1905.*—Babu Chandi Charan Chatterjee Deputy Magistrate and Deputy Collector, employed as Manager of the estates of Raja Sir Sourindra Mohun Tagore, KT., C.I.E., is promoted substantively *pro tempore* to the fourth grade of Deputy Magistrates and Deputy Collectors, but will continue to be seconded while on deputation.

EDUCATION.—*No. 302A.D.—The 22nd April 1905.*—The following promotions and confirmations are sanctioned in the Provincial Educational Service, with effect from the 15th March 1905:—

Promoted to Class V.

Babu Kisori Mohan Sen Gupta, *vice* Babu Kunja Bihari Basu, retired.

Confirmed in Class VI.

Babu Braja Lal Mukerji, *vice* Babu Kisori Mohan Sen Gupta, promoted to Class V.

Promoted substantively *pro tempore to Class VI.*

Babu Paras Nath Sen, *vice* Babu Braja Lal Mukerji, confirmed.

Confirmed in Class VII.

Babu Krishna Chandra Bhattacharjea, *vice* Babu Braja Lal Mukerji, confirmed in Class VI.

Promoted substantively *pro tempore to Class VII.*

Babu Satyendra Nath Bhadra, *vice* Babu Krishna Chandra Bhattacharjea, confirmed.

LEAVE.

GENERAL.—*No. 299A.D.—The 22nd April 1905.*—Mr. F. F. Lyall, Officiating Deputy Commissioner, Palamau, is allowed combined leave for six months, viz., privilege leave for two months and twenty-four days, under article 260 of the Civil Service Regulations, with effect from the 25th May 1905, and furlough for the remaining period under article 308 (*b*) of the Regulations.

Palamau.

No. 320A.D.—The 22nd April 1905.—Mr. A. H. Clayton, Officiating Magistrate and Collector, Pabna, is allowed combined leave for seven months, viz., privilege leave for three months under article 260 of the Civil Service Regulations, with effect from the 6th May 1905, and furlough for the remaining period under article 308 (*b*) of the Regulations.

Pabna.

No. 325A.D.—The 24th April 1905.—Babu Joges Chunder Dutt, substantive *pro tempore* Deputy Magistrate and Deputy Collector, Balasore, was on leave for six weeks, under article 260 of the Civil Service Regulations, with effect from the 18th February 1905.

Balasore.

VOLUNTEERS.—*No. 259A.D.—The 18th April 1905.*—Lieutenant John Leslie, Chota Nagpur Mounted Rifles, has been granted, by the General Officer Commanding Presidency Brigade, leave of absence for six months, with effect from the 13th April 1905.

No. 260A.D.—The 18th April 1905.—Paymaster and Honorary Captain Henry Hobbs, Calcutta Port Defence Volunteer Corps, has been granted, by the General Officer Commanding Presidency Brigade, leave of absence for six months, with effect from the 21st April 1905.

No. 261A.D.—The 18th April 1905.—Lieutenant George William Hyde Batho, Artillery Company, Calcutta Port Defence Volunteer Corps, has been granted, by the General Officer Commanding Presidency Brigade, leave of absence for six months, with effect from the 21st April 1905.

No. 327A.D.—The 24th April 1905.—Lieutenant Charles Alexander, Cossipore Artillery Volunteers, has been granted, by the General Officer Commanding Presidency Brigade, leave of absence for six months, with effect from the 15th April 1905.

No. 328A.D.—The 24th April 1905.—Second-Lieutenant Norris Luis Macdowell, Cossipore Artillery Volunteers, has been granted, by the General Officer Commanding Presidency Brigade, leave of absence for six months, with effect from the 15th April 1905.

POLICE.—*No. 296A.D.—The 22nd April 1905.*—Mr. C. E. Ezechiel, Officiating District Superintendent of Police, Bogra, is allowed leave for fourteen days under article 260 of the Civil Service Regulations, in extension of the leave granted to him under the orders of the 20th and 24th February 1905.

Bogra.

EDUCATION.—*No. 329A.D.—The 24th April 1905.*—Mr. William Billing, Inspector of Schools, Patna Division, is allowed leave for three months, under articles 260 and 301 (*b*) of the Civil Service Regulations, with effect from the 1st May 1905.

Patna Division.

RESIGNATION.

LEGISLATIVE.—*No. 188A.D.—The 15th April 1905.*—The Lieutenant-Governor is pleased to accept the resignation by the Hon'ble Mr. Edward Woodfield Collin of his office of Member of the Council of the Lieutenant-Governor of Bengal.

Council.

The following orders are republished from the *Assam Gazette* :—

No. 3315G.—The 19th April 1905.—Mr. P. G. Rogers, I.C.S., Assistant Commissioner, Gauhati, is appointed Personal Assistant to the Chief Commissioner.

No. 3316G.—The 19th April 1905.—Mr. J. C. Arbuthnott, C.I.E., I.C.S., Deputy Commissioner, on return from leave, is posted to Aijal as Superintendent, Lushai Hills.

No. 3405G.—The 22nd April 1905.—With effect from the 5th September 1904 and in supersession of Notification No. 10753G., dated the 23rd December 1904,—

Captain A. Playfair, I.A., Assistant Commissioner, second grade, and Mr. J. Donald, I.C.S., Assistant Commissioner, third grade, to be Assistant Commissioners, first grade, sub. *pro tem.*, but to continue to officiate as Deputy Commissioners, third grade.

Mr. P. E. Cammiade, I.C.S., Assistant Commissioner, first grade, sub. *pro tem.*, to officiate as Assistant Commissioner, first grade, but to be sub. *pro tem.* in the second grade of Assistant Commissioners.

Messrs. H. L. Salkeld, I.C.S., and F. W. Strong, I.C.S., Assistant Commissioners, third grade, to be Assistant Commissioners, second grade, sub. *pro tem*, but to continue to officiate as Assistant Commissioners, first grade.

„ J. McSwiney, I.C.S., and J. G. Dunlop, I.C.S., Assistant Commissioners, second grade, sub. *pro tem.*, to officiate as Assistant Commissioners, second grade.

No. 3406G.—The 22nd April 1905.—With effect from the 17th November 1904, *vice* Mr. J. Johnston, I.C.S., Assistant Commissioner, first grade, sub. *pro tem.*, transferred to Bengal,—

Mr. P. E. Cammiade, I.C.S., Assistant Commissioner, second grade, sub. *pro tem.*, and Officiating Assistant Commissioner, first grade, to be Assistant Commissioner, first grade, sub *pro tem.*

„ Mr. A. Majid, Assistant Commissioner, third grade, to be Assistant Commissioner, second grade, sub. *pro tem.*, but to continue to officiate as Assistant Commissioner, first grade.

„ Mr. J. G. Dunlop, I.C.S., Officiating Assistant Commissioner, second grade, to officiate as Assistant Commissioner, first grade.

This supersedes Notification No. 10755G, dated the 23rd December 1904.

No. 3407G.—The 22nd April 1905.—With effect from the 21st December 1904, *vice* Mr. J. Donald, I.C.S., Assistant Commissioner, first grade, sub *pro tem.*, transferred to Bengal,—

Mr. H. L. Salkeld, I.C.S., Assistant Commissioner, second grade, sub. *pro tem.*, and Officiating Assistant Commissioner, first grade, to be Assistant Commissioner, first grade, sub. *pro tem.*

„ A. R. Edwards, I.C.S., Assistant Commissioner, third grade, to be Assistant Commissioner, second grade, sub. *pro tem.*, but to continue to officiate as Assistant Commissioner, first grade.

This supersedes Notification No. 1828G., dated the 2nd March 1905.

No. 3409G.—The 22nd April 1905.—With effect from the 3rd January 1905, the date on which Mr. H. A. C. Colquhoun, I.C.S., Assistant Commissioner, second grade, returned from leave,—

Mr. H. A. C. Colquhoun, I.C.S., to be Assistant Commissioner, first grade, sub. *pro tem*, and to officiate as Deputy Commissioner, third grade, *vice* Mr. F. E. Jackson, appointed to officiate as Judge, Assam Valley Districts.

„ H. L. Salkeld, I.C.S., Assistant Commissioner, first grade, sub *pro tem.*, to be Assistant Commissioner, second grade, sub. *pro tem.*, and to officiate as Assistant Commissioner, first grade.

„ A. R. Edwards, I.C.S., Assistant Commissioner, second grade, sub. *pro tem.*, to cease to be sub. *pro tem.* in that grade, but to continue to officiate as Assistant Commissioner, first grade.

This supersedes Notification No. 1829G., dated the 2nd March 1905.

No. 3410G.—The 22nd April 1905.—With effect from the 15th February 1905, the date on which Major A. E. Woods, I.A., Deputy Commissioner, second grade, returned to duty from leave,—

Mr. W. J. Reid, I.C.S., Officiating Deputy Commissioner, second grade, to revert to his substantive appointment of Deputy Commissioner, third grade.

„ H. A. C. Colquhoun, I.C.S., Officiating Deputy Commissioner, third grade, to revert to Assistant Commissioner, first grade, sub. *pro tem.*

„ J. G. Dunlop, I.C.S., Officiating Assistant Commissioner, first grade, to officiate as Assistant Commissioner, second grade.

„ A. J. Lainé, I.C.S., Officiating Assistant Commissioner, second grade, to revert to his substantive appointment of Assistant Commissioner, third grade.

No. 3411G.—The 22nd April 1905.—With effect from the 17th February 1905, in consequence of the absence, on special duty, of Mr. S. G. Hart, I.C.S., Officiating Deputy Commissioner, third grade,—

Mr. H. A. C. Colquhoun, I.C.S., Assistant Commissioner, first grade, sub. *pro tem.*, to officiate as Deputy Commissioner, third grade.

„ J. G. Dunlop, I.C.S., Officiating Assistant Commissioner, second grade, to officiate as Assistant Commissioner, first grade.

„ A. J. Lainé, I.C.S., Assistant Commissioner, third grade, to officiate as Assistant Commissioner, second grade.

No. 234.—The 17th April 1905.—Mr. E. G. Hart, Assistant Superintendent of Police, received executive charge of the Garo Hills Treasury from Mr. R. A. Boërmel, on the 14th March 1905.

No. 235.—The 17th April 1905.—Captain A. Playfair, Officiating Deputy Commissioner, received executive charge of the Garo Hills Treasury from Mr. E. G. Hart, Assistant Superintendent of Police, on the 23rd March 1905.

R. W. CARLYLE,
Offg. Chief Secy. to the Govt. of Bengal.

REVENUE DEPARTMENT.

NOTIFICATIONS.

No. 169T.R.—The 17th April 1905.—Privilege leave for 14 days, under articles 246 and 260 of the Civil Service Regulations, is granted to Mr T. H. Monteath, Deputy Conservator of Forests, substantive *pro tempore* in charge of the Puri Division, with effect from the 25th April 1905, or from such subsequent date as he may avail himself of it.

Puri.

Mr. A. W. Stark, Deputy Magistrate and Deputy Collector, in charge of the Khurda subdivision, is appointed to hold charge of the Puri Division in addition to his present duties, during the absence of Mr. Monteath on privilege leave.

No. 2121.—The 25th April 1905.—Whereas it appears to the Lieutenant-Governor of Bengal that land is required to be taken by Government at the expense of the Sonamukhi Municipality for a public purpose, viz., for providing quarters for the Civil Hospital Assistant and for Charitable Dispensary at Sonamukhi, in the village of Sonamukhi, pargana Barahazari, zilla Bankura, it is hereby notified that for the above purpose a piece of land measuring, more or less, 1 bigha 2 cottahs 7 chitaks of standard measurement, bounded on the north, south, east and west by the lands of proprietors, viz., Nistabar Chatterjee, Radhika Chatterjee, Gopal Chakraburty, Sarada Prosad De, Kali Chand, Rakhal Datta, Shashi Banerjee and Darpa Narain Banerji, is likely to be required within the aforesaid village of Sonamukhi.

Bankura.

A plan of the land may be inspected in the office of the Subdivisional Officer of Vishnupur in supersession of Notification No. 2168M., dated the 14th July 1904, and published at pages 176 and 177, Part IB of the *Calcutta Gazette* of the 20th idem, which is hereby cancelled.

This notification is made, under the provisions of section 6 of Act I of 1894, to all whom it may concern.

No. 265T.R.—The 21st April 1905.—It is notified for general information that Declaration No. 246M.P.I., dated the 24th November 1903, published at page 1515, Part I of the *Calcutta Gazette* of the 25th idem, for the acquisition of two pieces of land required by the District Board of Jessore for the excavation of two tanks for taking earth for the improvement of the drainage of the Magura town, in the villages of Sabek Magura and Dari Magura, pargana Mahamedshahi, zilla Jessore, is hereby cancelled.

Jessore.

NOTIFICATION.

No. 302T.—R, dated the 24th April 1905.—The Lieutenant-Governor of Bengal is pleased to direct that, with effect from the 1st May 1905, the following revised rules and forms shall be substituted for those published at pages 1207- 1219, Part I of the *Calcutta Gazette of* the 16th September 1903 with the Government Notification No. 2093T.R., dated the 12th idem, on the subject of the payment of land revenue and cesses by means of postal money-orders.

R. W. CARLYLE,
Offg. Chief Secy. to the Govt. of Bengal.

RULES RELATING TO REVENUE MONEY-ORDERS.

1. These rules are divided into four parts :—

PART I.—Form of Revenue Money-order.
„ II.—Issue of Revenue Money-orders.
„ III.—Payment of Revenue Money-orders.
Section A—Payment from Head Offices at the head-quarters of districts.
„ *B*.—Procedure to be followed in the Collectorate.
„ IV.—Disposal of Acknowledgments.

2. The forms in use are given in Appendix D.

PART I.

THE FORMS OF REVENUE MONEY-ORDER.

The forms.

1. There are two forms of Revenue Money-order, viz., Form $\frac{1}{R.M.O}$ on white paper, for land revenue and zamindari dâk cess, and Form $\frac{1A}{R.M.O}$ on pink paper, for Road and Public Works cesses. Each of these forms is divided into three parts, viz. :—

(*a*) The Money-order
(*b*) The Acknowledgment.
(*c*) The Coupon or Chalan.

2. Part (*a*) requires no description, as it is exactly like the corresponding portion of the ordinary Inland Money-order form. Parts (*b*) and (*c*) are considerably larger than the acknowledgment and coupon of an ordinary money-order. Part (*b*) is on one side a duplicate of the chalan and is returned to the remitter as his receipt; on the reverse of this part are the remitter's name and address Part (*c*) contains on one side all the particulars required by the Treasury, and on the reverse instructions for remitters of revenue money-orders.

Not to be used for any other purposes.

3. Form $\frac{1}{R.M.O}$ is to be used for remittances of land revenue and zamindari dâk cess, and Form $\frac{1A}{R.M.O.}$ for remittances of Road and Public Works cesses, and for no other purpose.

To be freely distributed.

4. The forms of Revenue Money order should be freely distributed among the revenue-paying classes, and no restrictions whatever should be placed in the way of zamindars obtaining these forms.

Supply of forms.

5. Every Postmaster, Sub-postmaster, and Branch postmaster will be personally responsible that a sufficient supply of Revenue Money-order forms of each kind is always available in his office. In cases of emergency, supplies may be obtained by telegraph direct from the Stock Depôt of the Circle. Divisional Superintendents and Inspectors, when visiting post-offices, will see that a sufficient supply of Revenue Money-order forms of each kind is available, and mention in their diaries and inspection reports that they have done so.

6. The Revenue Money-order system does not apply to remittances of revenue payable to any Native State. Such remittances should be made by the ordinary Money-order form and be dealt with under the ordinary rules for money-orders.

PART II.

ISSUE OF REVENUE MONEY-ORDERS.

Issue of Revenue money-orders.

7. Revenue money-orders are issued from every Head, Sub, and Branch Post-office under the rules which govern the issue of ordinary Inland money-orders. The following paragraphs contain additional instructions, which relate solely to the issue of revenue money-orders.

Limit of amount.

8. The rules in the *Postal Guide* fixing the limit of value of a single ordinary Inland money-order apply to revenue money-orders. The rule prohibiting the inclusion of pies (fractions of an anna) in the amount of a money-order is not applicable to revenue money-orders, which may be for amounts including any fraction of an anna not less than one pie.

Office of Issue to help remitter in making entries.

9. The Office of Issue will help the remitter in making the requisite entries, and, if necessary, will make entries for him in the form of a revenue money-order, but no fee or any other gratification whatsoever is to be demanded or accepted, either directly or indirectly,

by any official of the Postal Department for this service. Disregard of this order will be punished by dismissal of the official in fault, who will, moreover, be liable to any further penalties provided by law. If, notwithstanding the assistance thus offered, the remitter is unable to fill up the entries himself or to give the information necessary for the purpose, the money-order should be returned to him and should not be issued by the post-office, till the information is complete.

Note.—Remitters should also be advised to allow ample time for their revenue money-orders for land revenue to reach the Treasury before *last* day, as the acceptance of a revenue money order after *last* day does not exempt an estate from sale, except as permitted by the rules applicable to personal payment of land revenue after *last* day.

Responsibilities of the Office of Issue.

10. The Office of Issue is responsible that no revenue money-order is issued of which the coupon (Chalan) is blank or is not completely filled up. The post-office has no means of ascertaining the correctness of the information supplied by a remitter; all that it is necessary to see is that entries are made against every printed item in the coupon (chalan), that these entries are made against the appropriate printed items, that all the items are understood by the remitter, and that the money-order is not for a larger sum than is allowed by the rules for ordinary Inland money-orders. The spaces in the acknowledgment and chalan for the entry of interest, penalty and expenses (*kharcha*) are intended to meet the requirements of remitters who are in arrears as regards the payment of their cesses, and have incurred liabilities for interest, penalty, process-fees, or other costs of proceedings. Every alteration or correction in the money-order must be attested by the initials of the remitter.

Distinguishing of revenue money-orders.

11. The letter "R" should be written before the number of every revenue money-order, and this mode of distinguishing revenue money-orders should be adopted wherever the number is entered.

Number to be assigned to Revenue Money-orders.

12. The number assigned to a revenue money-order by the Head Office or Sub-office of Issue will also be entered at the top of the coupon (chalan) and acknowledgment by the money-order clerk of the Head Office or the Sub-postmaster of the Sub-office of Issue, as the case may be.

PART III.

PAYMENT OF REVENUE MONEY-ORDERS.

SECTION A.—*Procedure in the Head Office of payment.*

13. When the revenue money-orders are in all respects* ready to be handed over to the postman, they should be examined with reference to the name of the audit office stamped on them and a separate list in triplicate† (Form $\frac{\text{R M O}}{3}$) should be made out by the money-order clerk for each audit office, the name of the audit office being noted in red ink at the head of the list.‡ The money-orders should be entered in each list according to the offices of issue, and the entries in the money column of the list should be carefully totalled. The original copy of each list will take the place of the journal of money-orders paid, the duplicate will be sent to the Treasury under the procedure described below, and the triplicate will be sent to the audit office concerned. When for the preparation of a list more than a single sheet of Form $\frac{\text{R M O}}{3}$ is required, each sheet should be separately totalled and a grand total should be made at the end of the last sheet of the list or on a separate sheet. The date stamp of the office of payment should be impressed on the space provided for it on the reverse of the acknowledgment portion of each money-order.

Note.—When it is necessary to prepare one or more separate lists in addition to the list for the Home audit office, the total of each other list should be entered below the total of the list for the Home audit office and a grand total made both in figures and words. In that case too, after the words "detailed above" in the printed entry to be signed by the Postmaster at the foot of the original and duplicate of the list for the Home audit office should be inserted in manuscript the words "and in the accompanying list" or "and in the accompanying two lists" as the case may require.

14. The postmaster should then check the entries in each list with those on the money-orders, and also check the total of the money column. He will then prepare a Treasury Voucher Form (A/c 12), representing the total value of the money-orders as entered in all the lists. The amount represented by the Treasury voucher will not be charged against the letter of credit, and will be paid quite independently of the balance of any letters of credit held by the Treasury in favour of the post-office. Postmasters before sending revenue money-orders to the Treasury should examine them carefully, and any error which might have been avoided should be brought to the notice of the Superintendent.

15. The duplicate copy of each list with the money-orders entered therein attached to it, and the Treasury voucher duly filled up, should then be made over to the postman for delivery at the Collectorate, the postman's receipt for the documents being taken in the usual manner in the Register of Money-orders received.

* Only the total number and amount of revenue money-orders received for payment need be entered in the Register of money orders received. In order, however that the record may be complete, it will be necessary to make a note in the last column of the Register whenever all the revenue money-orders received in one day are not included in the list of that date. For example, if in the Register of money-orders received on the 5th July there are shown 500 revenue money-orders for Rs. 10,000 but 200 of these orders for Rs 7,000 were received too late for inclusion in the list sent to the Collectorate on the 5th, there should be an entry in the last column of the Register in this form:—

200 for Rs. 3,000 included in list of 5th.
300 for Rs. 7,000 included in list of 6th.

† The duplicate and triplicate will be prepared by carbonic paper, and a hard pencil must therefore be used in writing the list.

‡ If on any date revenue money-orders stamped with the names of all three Audit offices are received for payment, it will be necessary to prepare three separate lists, each in triplicate.

16. The postman will take the duplicate copy of each list, the money-orders and the Treasury voucher to the Accountant, and will receive back from the Accountant the money-orders without the coupons and acknowledgments. The postman will be careful to see that he receives back all the money-orders and that they are all duly receipted by the Accountant, and in the case of money-orders for amounts exceeding Rs. 500, by the Treasury officer also.

17. The paid money-orders received back from the Treasury will be examined by the money-order clerk in the same way as ordinary money-orders, and checked in detail with the original list. The total amount of the money-orders entered in each list will then be entered in the appropriate journal of money-orders paid by a single entry thus :

Rs. A. P.

"As per Revenue Money-order list ." The money-orders will be disposed of in the usual way.

18. The original and triplicate of each list will be kept with the appropriate journal of money-orders paid until the next list of ordinary money-orders paid is sent to the audit office when the corresponding list of revenue money-orders paid will also be sent, the paid money-orders being arranged in order and attached to the lists. The original lists will then be filed, a separate file of original lists being kept with each journal of money-orders paid, so that the dates of the journal and file of revenue money-order lists correspond.

Entries in accounts.

19. The amount of the Treasury voucher will be entered in the head office summary, and the head office cash-book on the receipt side opposite the item, "Drawn from treasuries," and will be included in the sum entered on the disbursement side under the head, "Money-orders paid." The amount will also appear in the Treasury pass-book and Register of transactions with the Treasury as money drawn from the District Treasury. All these entries must be made on the same date.

Note.—The date referred to above is the date on which the money-orders are sent from the post-office to the Collectorate. If the procedure to be followed in the Collectorate is correctly observed, the money-orders will be credited in the Treasury on the same date. If, owing to press of work or other reasons, the money-orders are not credited in the Treasury on the same date, the entries in the head office summary, the head office cash-book and the Treasury pass-book should still be made as prescribed in rule 19 on the date on which the money-orders are sent to the Treasury for payment

The money-orders should also be entered as paid on the same date in the appropriate paid list of money-orders ; and if any revenue money-orders sent to the Collectorate have not been received back when the paid list is due to be sent to the audit office, the paid list should still be sent, and the money-orders should be forwarded on receipt, a note explaining the reason for their absence being submitted at the same time to the audit office.

20. On receipt of the acknowledgments duly signed, the money-order clerk will examine and compare them with the original list or lists already in his possession, and with the duplicate presented to him along with the acknowledgments ; and, if all are found correct, the postmaster will sign each duplicate list and return it to the Collectorate official who brought back the documents to the post office.

Acknowledgments for money-orders.

21. The money-order clerk should be particularly careful to see that he receives from the Collectorate an acknowledgment for every money-order, except when a note has been made on the duplicate list against any order showing that it was not for Land Revenue, Road, or Public Works cess, or Zamindari Dák cess. The money-order clerk will also see that every acknowledgment which he receives is in acknowledgment of the full amount of the money-order to which it appertains, and that the date of credit entered on each acknowledgment agrees with the date of payment of the money-order.

arison of the duplicate list with inal.

22. Before each duplicate list is returned to the Collectorate, the money-order clerk will carefully compare it with the original, and see that they are exactly alike, any remarks recorded in the one list (either in the Collectorate or by the money-order clerk, or the postmaster) being copied in the other list.

Duties of money-order clerk in respect of reports to postmaster.

23. It will be the duty of the money-order clerk to report to the postmaster if the signed acknowledgments and the duplicate list or lists are not returned to him at latest by 4 P.M. on the day following that on which the Treasury voucher was sent to the Collectorate. On receipt of such a report, the postmaster should at once bring the matter to the notice of the Treasury Officer. Any serious or oft-repeated delay in the return of the acknowledgments should be reported to the Head of the Circle. The money-order clerk should report to the postmaster every case in which revenue money-orders are not received back on the same day that they are sent to the Treasury, and if it is found that this happens frequently, the postmaster should bring the matter to the notice of higher authority.

24. The money-order clerk will report to the postmaster every case in which the coupon (ollalan) of a revenue money-order received by him is blank or is imperfectly filled up, and each such case should be reported by the postmaster to the Superintendent of the Division, in which the Office of Issue is situated.

Return of all revenue money-orders received during previous month.

25. On the 5th of every month, the money-order clerk will prepare a return (Form) of all revenue money-orders received during the last month, and this return will be submitted by the postmaster to the Head of the Circle.

SECTION B.—*Procedure to be followed in the Collectorate.*

26. On receipt in the Treasury of the money-orders with the duplicate copy of the list or lists in which they are entered and the Treasury voucher, the Accountant will check and

compare the documents. If there is any error, he will return all the documents to the Post-office with a note of the error or errors. This error note will be signed by the Accountant and the Tauzi Navis of the Department concerned; when the documents are correct, the Accountant will at once cut off the portion of each money-order containing the coupon and acknowledgment, sign and date the money-orders (as payee), and return the paid money-orders to the Postman. In the case of money-orders for amounts exceeding Rs. 500, the Treasury officer also shall sign and date the money-orders as payee. The Accountant will retain the lower portion of each money-order, including the coupon and acknowledgment, the duplicate list or lists of money-orders (Form $\frac{A}{M.O.}$) and the Treasury voucher. No money-order received from the Post Office may be refused.

The acceptance of the revenue money-order after *kist* day is to be treated in the same manner as the receipt of a personal payment of revenue after *kist* day, and the sum will be kept in revenue deposit till the Collector has passed orders accepting the payment.

Entries in accounts.

27. The Treasury Officer will, on the same day, charge off the amount represented by the Treasury voucher (A/c 12) by transfer, and credit the amounts of the several money-orders as shown in the list or lists and on the acknowledgments to the appropriate departments.

If the estate on account of which a remittance of land revenue has been received is situated in another district, the remittance should be credited in the usual way, and the Collector to whom the money-order should have been addressed should be advised of the credit, according to the procedure in Chapter II, section XII, rule 2, of the Board's Tauzi Manual, 1899. The remitter should also be advised of his error by a note on the money-order acknowledgment. In the case of Road and Public Works cess and Zamindari Dák cess, the amount thus erroneously remitted should be transmitted by remittance transfer receipts to the Collector of the district to which the cess properly belongs, and the remitter of the money-order should be advised of his error, as in the case of land revenue.

If it should be found that a revenue money-order has been erroneously issued for a remittance of some due other than Land Revenue, Road or Public Works cess or Zamindari Dák cess, the Treasury officer should make a note to that effect against the entry of the money-order on the duplicate list, and forward the coupon and acknowledgment with an advice list (Form 4, G.M.O.) to the appropriate department for disposal under the rules in Part III of the rules for Government money-orders other than revenue money-orders.

Money-orders which cannot at once be credited in the Treasury accounts.

28. If it should be found that any money order represents a remittance apparently not due to or intended for Government or any department or authority having an account in the Treasury, or that the amount of the money-order cannot for this or any other reason be credited at once in the Treasury accounts, the amount should be disposed of according to the standing rules and practice of the Account Department, or be made over in cash to the officer who would have been entrusted with it had the money been paid in cash instead of by money-order, or had it been sent as cash in an ordinary or registered letter.

Responsibility of Treasury officer.

29. The Treasury officer will be responsible that the total of the amounts credited to the different departments and any sum made over in cash under rule 28 is equal to the amount of the Treasury voucher received from the post-office, and debited to the Postal Department

Examination of money-orders.

30. The next business to be done in the Collectorate will be a rough examination of the acknowledgments and coupons to see that the necessary particulars of remittance are given in each case. This examination should be made by the Tauzi Navises of the Land Revenue and Cess Offices, and by the Certificate Department, if a certificate has issued on account of Road and Public Works cess. If the amounts due on account of any cess, interest, penalties, and expenses are wrongly distributed by the remitter in the money-order, the Land Revenue or the Cess Department will correct the distribution. It is not necessary at this stage that the money-orders should be sent to, or examined by, the Zamindari Dák office, even when they contain remittances of zamindari dák cess. The fact that the amount remitted is less or more than is due is immaterial. If more than is due is remitted, the excess will be treated as a payment in advance; if less than is due is remitted, it will be treated as a payment on account.

If owing to omissions or errors in the particulars of remittance, there is any uncertainty as to whether a remittance can be correctly credited according to the intentions of the remitter, a note should be made across the acknowledgment in red ink, stating how the remittance has been credited or what further particulars are required, and in the latter case the remitter should be asked to send the required information immediately by letter. If a remittance of land revenue by money-order is received in the Treasury after the sunset of *kist* day, a note should similarly be made across the acknowledgment in red ink to the effect that the payment is "too late for *kist* day." *

Documents to be returned to the post-office and to be retained in the Collectorate.

31. Immediately after the examination prescribed in the preceding rule, the acknowledgments should be signed, dated, and returned with the duplicate list or lists to the post-office. The date on the acknowledgments must be the date of receipt of the Treasury voucher by which the money-orders were paid.

* It is to be understood that the date of receipt of the money-order in the Treasury is the date of the Treasury voucher by which it is paid, and not necessarily the date on which the acknowledgment is examined, signed or returned.

The Treasury Officer will be responsible that the acknowledgments and duplicate list or lists are returned to the Post-office at latest by 4 P.M. on the day following that on which they were received in the Collectorate. The chalans will be retained in the Collectorate.

Treatment of chalans.

32. After the return of the acknowledgments to the Post-office, the chalans of Form R.M.O. should be sent to the Land Revenue Tauzi Office, and those of Form R.M.O. to the Cess Tauzi Office, so that the remittances may be entered in the departmental registers. The chalans should be initialled by a responsible officer of each department, and then be returned to the Collectorate. On each coupon is to be noted by the muharrir the date when he posted in the tauzi ledger the amount referred to in the coupon. The muharrir is to sign such note.

Duplicate list or lists to be filed

33. When the duplicate list or lists, with the Postmaster's acknowledgment for the documents returned to him, are received back from the Post-office they should be attached to the chalans and filed in the Collectorate.

PART IV.

Disposal of Acknowledgments.

Acknowledgments.

34. The Acknowledgments appertaining to Revenue Money-orders received from the Collectorate will be sorted separately for each Office of Issue, and enclosed in envelopes (Form R.M.O.) addressed to the Post-masters of those offices. The total number of acknowledgments closed in each envelope will be the registered number assigned to that envelope. The acknowledgments for orders issued at Branch office are not to be returned to the Branch office direct, but through the Account office.

Envelopes containing Acknowledgments.

35. The money orders issued by each office will then be bracketed together in the remarks column of the original copy of the list prepared in Form R.M.O., and the registered number of the envelope enclosing the corresponding acknowledgments will be noted against each bracket. The closed envelopes will then be made over to the registration clerk for despatch, his receipt for the total number of envelopes 'numbered as above' being taken at the foot of the list.

Disposal of envelopes and acknowledgments.

36. On arrival in the Office of Issue, the envelopes will be opened and the acknowledgments contained in each envelope will be checked with the registered number of the money-order. The envelopes will then be destroyed. The acknowledgments will then be stamped with the Money-order stamp, and be sorted for distribution to postmen and village postmen. The numbers of all acknowledgments given to each postman and village postman will be detailed separately by the Money-order Clerk, Sub or Branch Postmaster in the postman's book or the village postman's register, the entries being repeated as often as the acknowledgments are given out for delivery.

Delivery of acknowledgments.

37. The postman or village postman will obtain the remitter's signature or mark when delivering each acknowledgment in the postman's book or the village postman's register.

Non-delivery and disposal of. acknowledgments.

38. Acknowledgments which cannot be delivered in consequence of the remitter not being found will be returned by the postman, or village postman to the Money-order clerk, Sub-Postmaster, or Branch Postmaster as the case may be, who will sign for them in the Postman's Book or Village Postman's Register.

Undelivered acknowledgments.

39. Undelivered acknowledgments will be kept in the Office of Issue (if a Head Office) for a period of 12 months, and, if still unclaimed, will be destroyed.

40. In Sub-Offices and Branch Offices undelivered acknowledgments will be retained for a period of three months, and, if still unclaimed, will be forwarded to the Head Office under a Postal Service registered cover. Such acknowledgments will be kept in the Head Office for a further period of nine months, and, if then still on hand, will be destroyed.

Responsibility of Post-office for delivery of acknowledgments

41. Postmasters, Sub-Postmasters, and Branch Postmasters of the Offices of Issue will be responsible that acknowledgments are delivered to remitters of Revenue Money Orders without any unnecessary delay and free of charge. Enquiries as to the punctual and free delivery of acknowledgments should be made from time to time from zamindars who may call at the Post Office to have Revenue Money-orders issued.

Remitter to examine acknowledgments.

42. Remitters of Revenue Money-orders should be advised to examine carefully their acknowledgments for the money-orders, in case there should be any red ink note by the Collectorate calling for further particulars, or indicating a doubt as to whether a remittance has been correctly credited according to the intentions of the remitter.

APPENDIX D.

List of Forms appertaining to Revenue Money-orders.

Number of each form.	Name of each form.	REMARKS.
1	2	3
$\frac{1}{R.\ M.\ O.}$	Revenue Money-order for land revenue and zamindari dâk cess.	Loose form.
$\frac{1A}{R.\ M.\ O.}$	Revenue Money-order for road and public works cesses.	Ditto
$\frac{2}{R.\ M.\ O.}$	List	Loose form to be used by head offices at the head-quarters of districts
$\frac{3}{R.\ M.\ O.}$	Monthly return of Revenue Money-orders received.	Litto ditto.
$\frac{4}{R.\ M.\ O}$	Acknowledgment envelope ...	To be printed in black ink on pink paper, to be used by head-offices at head-quarters of districts.

1.
R. M. O.

REVENUE MONEY ORDER.

[Authorized for the Bengal, Eastern Bengal and Bihar Circles.]

For remittances of Land Revenue, and Zamindari Dâk Cess only.

Pay to the Payee named the sum specified on the reverse.

Cash-Paid Stamp

Signature of Paying Postmaster

Name of Issue of M. O. of Payment

No. _____

Received payment of the sum specified on the reverse.

Date ___ *190* .

Signature of payee (in ink.)

Paid by me Rs. ____ *As.* ____ *P.* ____

Signature and designation of Official who paid the amount.

Name of remitter _____

Address of ,, _____

Name Stamp to be impressed by Post Office of issue.

Date Stamp of the Office of Payment

LAND REVENUE AND DÂK CESS.

M. O. Name | | *Stamp.*

No. R.

Date 190 .

To the Head Office at

	Rs.	As.	P.
Amount of order			

Amount in words

Name and number of R. O. or S. O. of issue.

To be filled up by Post Office.

Signature of M.-O. Clerk or Sub-Postmaster. *Signature of Issuing Postmaster.*

[*All the entries below this line to be filled up by the Remitter in English or Vernacular*]

Amount of Order (in words) _____

Name and Address of the Payee (in full) _____

Date stamp of the last Sorting Office or station.

Date _____ 190 . *Signature of Remitter.*

C. M. O. Stamp.

The remitter will fill up all headings in this portion above the space for the Accountant's signature, except the headings "Money-order No." and "Accountant's No."

Acknowledgment.

[This will be returned to the remitter through the Post Office.]

Money-order No. **Accountant's No.**

Name of the proprietor to whose account the money is to be credited _____

Tauzi number of estate, and of separate account, if any _____

Name of estate, and of separate account, if any _____

Name of pargana, tappa, &c. _____

		Rs.	As.	P.	*Kist for which paid.*
Amount of Land Revenue					
Amount of Zamindári Dák Cess ...	*Dák Cess* ...				
	Dák Cess penalty ...				
	Dák Cess costs ...				
Total ...					

Total amount in words _____

Signature of accountant, with date

The remitter must write his name and address on the reverse of this acknowledgment.

1A.
R. M. O.

REVENUE MONEY ORDER.

[Authorized for the Bengal, Eastern Bengal and Bihar Circles.]

For remittances of Road and Public Works Cesses only.

Pay to the payee named the sum specified on the reverse.

Cash-Paid Stamp.

Signature of Paying Postmaster.

No.

Money order stamp of M. O. of Payment.

Received payment of the sum specified on the reverse.

Date _____ *190* . *Signature of payee (in ink).*

Paid by me Rs. ____ *As.* ____ *P.* ____

Signature and designation of Official who paid the amount.

Name of remitter _____

Address of „ _____

Name Stamp to be impressed by Post Office of issue.

ROAD AND PUBLIC WORKS CESSES.

M. O. Name _____ *Stamp*

No. R.

Date 190 .

To the Head Office at

	Rs.	As.	P.
Amount of order			
Amount in words			

Money-order Stamp of H. O. or S. O. of Issue.

To be filled up by Post Office.

Signature of M.-O. Clerk or Sub-Postmaster. *Signature of Issuing Postmaster.*

[*All the entries below this line to be filled up by the remitter in English or vernacular.*]

Amount of order (in words) _____

Name and address of the payee (in full) _____

Date Stamp of the last Sorting Office or Section

Date _____ 190 . *Signature of Remitter.*

C. M. O. Stamp.

The remitter will fill up all headings in this portion above the space for the Accountant's signature, except the headings "Money-order No." and "Accountant's No."

Acknowledgment.

Money-order [This will be returned to the remitter through the Post Office.]

Accountant's No _____

Name of the proprietor to whose account the money is to be credited _____

Tauzi number of estate, and of separate account, if any _____

Name of estate, and of separate account, if any _____

No. in Register I, V, or VII _____

Name of pargana or Thana _____

		Rs.	As.	P.	List for which pa
Amount of Road and Public Works Cesses.	*Road and Public Works Cesses*				
	Interest				
	Costs				
	Total ...				

Total amount in words _____

Form $\frac{2}{R.M.O.}$

For _____ Audit Office.

ORIGINAL.

This list will be filed in the Post Office.

List of Revenue Money-orders sent from _____

Post Office to the _____ Treasury on _____

1	2	3	4	5			6
Serial number.	Post Office of issue (when the Post Office of issue is a branch office, the name of the Account Office must be entered also in parentheses).	Number of money-order.	Date of money-order.	Amount of money-order.			Remarks
				Rs.	A.	P.	

Total amount in figures and words

Date Stamp of Post Office.

_____

Signature of Money-order Clerk.

The money-orders detailed above for Rs. _____ have been paid by Treasury voucher on _____

Signature of Postmaster.

Form $\frac{2}{R.M.O.}$

For _____ Audit Office.

DUPLICATE.

This list will be filed in the Treasury.

List of Revenue Money-orders sent from _____ Post Office to the _____ Treasury on _____

1	2	3	4	5			6
Serial number.	Post Office of issue (when the Post Office of issue is a branch office, the name of the Account office must be entered also in parenthesis).	Number of money-order.	Date of money-order.	Amount of money-order.			Remarks
				Rs.	A.	P.	

Total amount in figures and words

Date Stamp of Post Office.

_____

Signature of Money-order Clerk.

The money-orders detailed above for Rs. _____ have been paid by Treasury voucher on _____

Signature of Postmaster.

Received the acknowledgments for the above money-orders less _____ shown above as irregularly sent by revenue money-order instead of ordinary money-order.

_____

Signature of Postmaster.

Form 2 R.M.O.

For _____ Audit Office.

TRIPLICATE.

This list will be sent to the Audit Office.

List of Revenue money-orders sent from _____ Post Office to the _____ Treasury on _____

1	2	3	4	5			6
Serial number.	Post Office of issue (when the Post Office of issue is a branch office, the name of the Account office must be entered also in parenthesis.	Number of money-order.	Date of money-order.	Amount of money-order.			REMARKS.
				Rs.	A.	P.	

Total amount in figures and words

Date Stamp of Post Office.

_____

Signature of Postmaster.

Form 3 R.M.O.

Return showing the total number and value of Revenue Money-orders received at Head Office during the month of _____ 190 .

	Total number of Revenue Money-orders.	Total value of Revenue Money-orders.
(1) Remaining undisposed of at the close of last month ...		
(2) Received during the month ...		
(3) Total to be accounted for ...		
(4) Paid by Treasury vouchers ...		
(5) Remaining undisposed of at the close of the month ...		

NOTE.—The totals of the entries in lines (4) and (5) must agree with the entries in line (3).

The _____ 190 .

Postmaster.

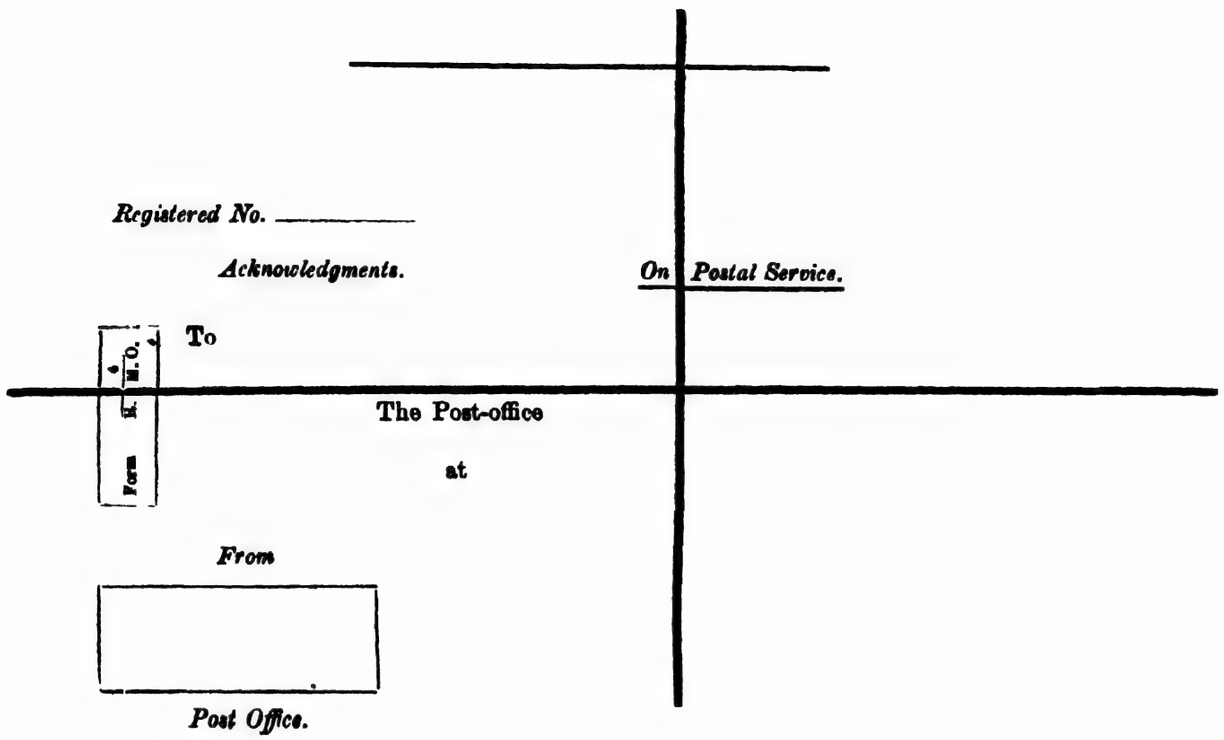

Numbers of Revenue Money-orders to which the Acknowledgments enclosed in this envelope appertain.

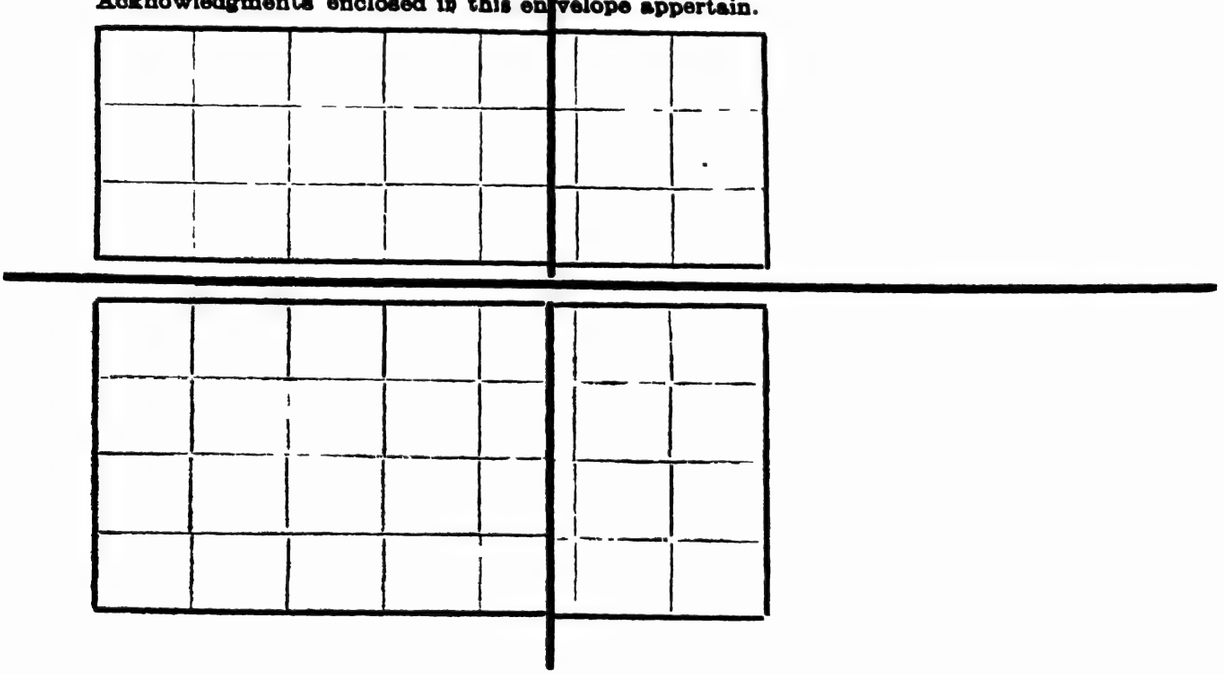

Backergunge. Khulna. 24-Parganas.

No. 308T.R.—The 24th April 1905.—Mr. D. Sunder, Deputy Magistrate and Deputy Collector, is appointed to be a Deputy Collector in each of the three districts of Backergunge, Khulna and the 24-Parganas.

Tippera.

No. 309T.R.—The 24th April 1905.—It is hereby notified for general information that under the powers vested in him by section 3 of Act XIII of 1899 (Glanders and Farcy Act) the Lieutenant-Governor is pleased to authorise the application of this Act within the limits of the district of Tippera.

R. W. CARLYLE,
Offg. Chief Secy. to the Govt. of Bengal.

DECLARATION.

Noakhali.

No. 170T.R.—The 15th April 1905.—Whereas it appears to the Lieutenant-Governor of Bengal that land is required to be taken by Government at the expense of the Noakhali Municipality for a public purpose, viz., for a cremation ground, in the village of Sallaygotaia, pargana Bhuluah, zilla Noakhali, it is hereby declared that for the above purpose a piece of land measuring, more or less, 1 bigha 5 cottahs 1 chitak of standard measurement, bounded as follows, is required within the aforesaid village of Sallaygotaia:—

Plot No. 1.—On the north by Fazilmiah's paddy-field, on the south by drain, on the east by Muslim's paddy-field, and on the west by Abbas Ali's paddy-field.

Plot No. 2.—On the north by plot No. 1, on the south by Bairagipara road, on the east by Azgar's paddy-field, and on the west by Abbas Ali's paddy-field.

This declaration is made, under the provisions of section 6 of Act I of 1894, to all whom it may concern.

A plan of the land may be inspected in the office of the Collector of Noakhali.

R. W. CARLYLE,
Offg. Chief Secy. to the Govt. of Bengal.

DECLARATION.

Noakhali.

No. 212O.—The 17th April 1905.—Whereas it appears to the Lieutenant-Governor of Bengal that land is required to be taken by Government at the expense of the District Board of Noakhali for the extension of the Chagalnaiya bungalow compound in the village of Chagalnaiya, pargana Dakhinshik, zilla Noakhali, it is hereby declared that for the above purpose a piece of land measuring, more or less, 2 bighas and 13 chitaks of standard measurement, bounded on the north by District Board road slope, on the south by *nal* land of Babu Prasanna Kumar Shaha, on the east by thana road slope, and on the west by old dâk bungalow compound tank, is required within the aforesaid village of Chagalnaiya.

This declaration is made, under the provisions of section 6 of Act I of 1894, to all whom it may concern.

A plan of the land may be inspected in the office of the Collector of Noakhali.

R. W. CARLYLE,
Offg. Chief Secy. to the Govt. of Bengal.

DECLARATION.

Hooghly.

No. 219T.R.—The 18th April 1905.—Whereas it appears to the Lieutenant-Governor of Bengal that land is required to be taken by Government at the expense of the Howrah District Board for a public purpose, viz, for the construction of a feeder road to Munshir Hât Railway Station, in the village of Narendrapur, pargana Balia, zilla Hooghly, it is hereby declared that for the above purpose four pieces of land measuring in all, more or less, 5 bighas 10 cottahs 13 chitaks 15 square feet of standard measurement, of which the boundaries are given below, are required within the aforesaid village of Narendrapur: —

Plot I.—The plot is bounded on the north by the lands of Atar Nabis Mollah and Abdul Karim Mollah, on the south by the compound of Bakshu Sheik's musjid, on the east by Jaggatbullavapore-Amta District Board road, and on the west by Narendrapur village road.

Plot II.—The plot is bounded on all sides by the lands of Bhola Nath Bose of Narendrapur.

Plot III.—The plot is bounded on the north by the lands of Bhola Nath Bose Husmut Ulla, Brojo Nath Biswas, Atul Nag and Ganesh Rai, on the south by the lands of Bhola Nath Bose, Husmut Ulla, Atul Nag and Maulvi Abdul Bari, on the east by the land of Bhola Nath Bose, and on the west by the Narendrapur village road.

Plot IV.—The plot is bounded on the north by the lands of Raja Mullick and others, Ashutosh Bose, Guru Dayal Roy, Bhola Nath Bose and Hadem Uddin, on the south by the lands of Raja Mullick and others, Jogendra Nath Bose, Gurudyal Roy, Bhola Nath Bose and Hadem Uddin, on the east by the village road, and on the west by District Board Basantapore road.

This declaration is made, under the provisions of section 6 of Act I of 1894, to all whom it may concern.

A plan of the land may be inspected in the office of the Land Acquisition Deputy Collector of Howrah.

R. W. CARLYLE,
Offg. Chief Secy. to the Govt. of Bengal.

DECLARATION.

No. 246T.R.—The 20th April 1905.—Whereas it appears to the Lieutenant-Governor of Bengal that land is required to be taken by Government at the expense of the East Indian Railway Company for a public purpose,

Manbhum.

viz, for Clerk's quarters at Alkusa Block Hut, East Indian Railway, in the village of Alkusa, pargana Jheria, zilla Manbhum, it is hereby declared that for the above purpose a piece of land measuring, more or less, 1 bigha 4·44 chitaks of standard measurement (corresponding to 0·34 acre), bounded on the north and east by the land of East Indian Railway Company, and on the south and west by the *danga* land of Jheria Raj, is required within the aforesaid village of Alkusa.

Mines of coal, iron-stone, slate or other minerals lying under the land, except only such parts of the mines and minerals as it may be necessary to dig or carry away, or use in the construction of the work for the purpose of which the land is being acquired, are not needed.

This declaration is made, under the provisions of section 6, Act I of 1894, and section 3, clause (1), Act XVIII of 1885, to all whom it may concern.

A plan of the land may be inspected in the office of the District Engineer, East Indian Railway, Asansol.

R. W. CARLYLE,
Offg. Chief Secy. to the Govt of Bengal.

DECLARATION.

No. 269T.R.—The 20th April 1905.—Whereas it appears to the Lieutenant-Governor of Bengal that land is required to be taken by Government at the expense of the Kotrung Municipality for a public purpose, viz,

Hooghly.

for the construction of cattle and cooly sheds in the village of Kotrung, pargana Boro, zilla Hooghly, it is hereby declared that for the above purpose a piece of land measuring, more or less, 2 cottahs and 13½ chitaks of standard measurement, bounded on the north by Prasadi Bewa's homestead land, on the east by the Grand Trunk Road, and on the south and west by Akhoy Koley's land, is required within the aforesaid village of Kotrung.

This declaration is made, under the provisions of section 6 of Act I of 1894, to all whom it may concern.

A plan of the land may be inspected in the office of the Collector of Hooghly.

R. W. CARLYLE,
Offg. Chief Secy. to the Govt. of Bengal.

DECLARATION.

No. 267T.R.—The 21st April 1905.—Whereas it appears to the Lieutenant-Governor of Bengal that land is required to be taken by Government at the public expense for a public purpose, viz., for extension of the

Cuttack

Ravenshaw College Hindu hostel, in the village of Baharnal, pargana Bakharabad, zilla Cuttack, it is hereby declared that for the above purpose two pieces of land, measuring in all, more or less, 1 acre 1 rood 34·857 poles of standard measurement, bounded as follows, are required within the aforesaid village of Baharnal:—

PLOT 1 ... *North.*—Naunda Deul Lane.
South.—Sahebjada Bazar Lane.
East.—Normal School Lane.
West.—College Lane.

PLOT 2 ... { *North.*—College hostel compound.
South.—Katjoori riverside cutchery road.
East.—College Lane.
West —Police office compound

This declaration is made, under the provisions of section 6 of Act I of 1894, to all whom it may concern.

A plan of the land may be inspected in the office of the Land Acquisition Officer, Cuttack.

R. W. CARLYLE,
Offg. Chief Secy. to the Govt. of Bengal.

DECLARATION.

No. 270T.R.—The 21st April 1905.—Whereas it appears to the Lieutenant-Governor of Bengal that land is required to be taken by Government at the public expense for a public purpose, viz, for Russa Tol Station in the village of Patoory (Russa), pargana Magura, zilla 24-Parganas, it is hereby declared that for the above purpose a piece of land measuring, more or less, 1 bigha 25 square feet of standard measurement, bounded on the north by tow-path and toll-house land, on the east by Russa toll-house land and Kawrapukur khal, and on the south and west by the land belonging to Jadu Nath Mukherjee, is required within the aforesaid village of Patoory (Russa).

24-Parganas.

This declaration is made, under the provisions of section 6 of Act I of 1894, to all whom it may concern.

A plan of the land may be inspected in the office of the Executive Engineer, Circular and Eastern Canals Division, Writers' Buildings, Calcutta.

R. W. CARLYLE,
Offg. Chief Secy. to the Govt. of Bengal.

DECLARATION

No. 303T R.—The 24th April 1905.—Whereas it appears to the Lieutenant-Governor of Bengal that land is required to be taken by Government at the public expense for a public purpose, viz., for diversion of Dubaha nallah aqueduct in the village of Dardari, pargana Rajpore Soheria, zilla Champaran, it is hereby declared that for the above purpose a piece of land measuring, more or less, 4 bighas 12 cottahs and 10 chitaks of standard measurement, bounded on the—

Champaran.

North, East, West and *South*—Parti land belonging to Bettiah Raj,

is required within the aforesaid village of Dardari.

This declaration is made, under the provisions of section 6 of Act I of 1894, to all whom it may concern.

A plan of the land may be inspected in the office of the Executive Engineer, Champaran Division.

R. W. CARLYLE,
Offg. Chief Secy. to the Govt. of Bengal.

DECLARATION.

No. 307T.R.—The 24th April 1905.—Whereas it appears to the Lieutenant-Governor of Bengal that land is required to be taken by Government at the public expense for a public purpose, viz., for Plassey station yard in Ranaghat-Murshidabad Branch Railway, in the village of Hazrapota, pargana Khosalpur, zilla Nadia, it is hereby declared that for the above purpose a piece of land measuring, more or less, 4 bighas 10 cottahs of standard measurement, in mile Nos. 47-48 of Ranaghat-Murshidabad Branch, Eastern Bengal State Railway, is required within the aforesaid village of Hazrapo a.

Nadia.

This declaration is made, under the provisions of section 6 of Act I of 1894, to all whom it may concern.

A plan of the land may be inspected in the office of the Collector of Nadia.

R. W. CARLYLE,
Offg Chief Secy. to the Govt. of Bengal.

FINANCIAL DEPARTMENT.

NOTIFICATIONS.

No. 49T S.R.—The 19th April 1905.—Mr. A. Wolferstan, 3rd Assistant Collector of Customs, Calcutta, temporary rank, is allowed privilege leave for one month, with effect from the 1st May 1905.

Calcutta.

No. 52T.S.R.—The 19th April 1905.—Mr. A. E. McKenna, Import Supervisor, is appointed to act as 3rd Assistant Collector of Customs, Calcutta, during the absence, on leave, of Mr. A. Wolferstan.

Calcutta.

E. A. GAIT,
Offg. Secy. to the Govt. of Bengal.

MEDICAL DEPARTMENT.

NOTIFICATIONS.

No 240T.M.—The 20th April 1905.—Captain T. H. Delany, I.M.S., Civil Surgeon, stationed at Jalpaiguri, is allowed privilege leave combined with furlough for one year, viz, privilege leave for 21 days under article 260 of the Civil Service Regulations, and furlough for the remaining period under article 308(*a*) of the Regulations, with effect from the afternoon of the 18th March 1905.

Jalpaiguri.

No. 281T.M.—The 22nd April 1905.—Military Assistant Surgeon J. C. Gillmon, Officiating Civil Surgeon, Serampore, is confirmed as a Civil Surgeon, *vice* Senior Assistant Surgeon W. A. Williams, I.S.M.D., retired.

Serampore.

No. 298T.M.—The 22nd April 1905.—Captain T. H. Delany, I.M.S., Civil Surgeon, reported his departure from India on leave on the afternoon of the 25th March 1905.

E. A. GAIT,
Offg. Secy. to the Govt. of Bengal.

JUDICIAL DEPARTMENT.

No. 2828A.

APPOINTMENTS AND TRANSFERS.

No. 282A.D.—The 22nd April 1905.—Babu Rajnarayan Mukerji, Munsif of Alipore, in the district of the 24-Parganas, is appointed to act as Subordinate Judge of Jessore, during the absence, on leave, of Babu Bepin Behary Chatterjee, or until further orders, and is vested with the powers of a Judge of a Court of Small Causes for the trial of suits cognizable by such a Court up to the value of Rs. 500, within the local limits of the Sadar Munsifi of Jessore.

24-Parganas.
Jessore.

No. 284A.D.—The 22nd April 1905.—Babu Promotho Nath Chatterjee, Officiating Additional Munsif in the district of the 24-Parganas, on deputation to Alipore, is appointed to be a Munsif in the same district, to be ordinarily stationed at Alipore, *vice* Babu Rajnarayan Mukerji, and is vested with the powers of a Judge of a Court of Small Causes for the trial of suits cognizable by such a Court up to the value of Rs. 100, within the local limits of that portion of the Alipore Munsifi which lies outside the jurisdiction of the Small Cause Court at Sealdah.

24-Parganas.

No. 288A.D.—The 22nd April 1905.—Babu Srish Chandra Roy, M.A., B.L., is appointed to act, until further orders, as a Munsif in the district of Gaya, to be ordinarily stationed at the Sadar station, but to be on deputation to act as Additional Munsif of Alipore, in the district of the 24 Parganas.

Gaya.
24-Parganas.

No. 313A.D.—The 22nd April 1905.—Babu Ram Chandra Ghose, M.A., B.L., is appointed to act as a Munsif in the district of Dacca, to be ordinarily stationed at the Sadar station, during the absence, on leave, of Babu Hridoy Nath Mazumdar, or until further orders.

Dacca.

No. 334A.D.—The 24th April 1905.—Babu Ras Vihari Basu, Subordinate Judge, Saran, is appointed to be Subordinate Judge, Monghyr, in the district of Bhagalpur, *vice* Babu Mati Lal Haldar, about to retire, and is vested with the powers of a Judge of a Court of Small Causes for the trial of suits cognizable by such a Court up to the value of Rs. 500, within the local limits of the Monghyr Munsifi.

Saran.
Bhagalpur.

No. 336A.D.—The 24th April 1905.—Babu Sarada Prasad Basu, Munsif, Serampore, Hooghly, is appointed to act, until further orders, as Subordinate Judge, Saran.

Hooghly
Saran.

No. 338A.D.—The 24th April 1905.—Babu Hari Charan Gangopadhya Sastri, M.A., B.L., is appointed to act as a Munsif in the district of Hooghly, to be ordinarily stationed at Serampore, during the absence, on deputation, of Babu Sarada Prasad Basu, or until further orders.

Hooghly.

LEAVE.

No. 279A.D.—The 22nd April 1905.—Babu Bepin Behary Chatterjee, Subordinate Judge, Jessore, is allowed leave for one month and twenty-one days, viz., one month and one day under article 272 of the Civil Service Regulations, and twenty days under article 271 of the Regulations, with effect from the 25th April 1905.

Jessore.

POWERS.

No. 272A.D.—The 20th April 1905.—Mr. Manmatha Krishna Deb, Officiating Joint-Magistrate, Mymensingh, is vested, under section 407 (2) of the Code of Criminal Procedure, with power to hear appeals from convictions by Magistrates of the second and third classes.

Mymensingh.

No. 286A.D.—The 22nd April 1905.—Babu Durga Das Bose, Munsif of Alipore, in the district of the 24-Parganas, is vested with powers under section 19, sub-section (2) of the Bengal, North-Western Provinces and Assam Civil Courts Act, XII of 1887, to try under the ordinary procedure original suits up to the value of Rs. 2,000, within the local limits of the Sadar Munsifi of Alipore.

24-Parganas.

No. 315A.D.—The 23rd April 1905.—Babu Haripado Mazumdar, Munsif of Dacca, is vested with the powers of a Judge of a Court of Small Causes for the trial of suits cognizable by such a Court up to the value of Rs. 100, within the local limits of the Sadar Munsifi of Dacca.

Dacca.

No. 325A.D.—The 22nd April 1905.—Under the authority vested in him by section 357, sub-section (2) of the Code of Criminal Procedure, Act V of 1898, the Lieutenant-Governor empowers Babu Khirod Lal Mookerji, substantive *pro tempore* Deputy Magistrate, Backergunge, to take down evidence in criminal cases in the English language.

Backergunge.

No. 340A.D.—The 24th April 1905.—Babu Rajendra Nath Datta, Officiating Subordinate Judge, Saran, is vested with the powers of a Judge of a Court of Small Causes for the trial of suits cognizable by such a Court up to the value of Rs. 500, within the local limits of the Chapra Munsifi.

Saran.

R. W. CARLYLE,
Offg. Chief Secy. to the Govt. of Bengal.

APPOINTMENTS AND TRANSFERS.

No. 332J.D.—The 22nd April 1905.—Babu Jagobandhu Mukerjee is appointed to be an Honorary Magistrate of the Municipal Bench at Baidyabati, in the district of Hooghly.

Hooghly.

RESIGNATIONS.

No. 371J.D.—The 19th April 1905.—The Lieutenant-Governor accepts the resignation tendered by Babu Kali Prasanna Das Gupta of his appointment as an Honorary Magistrate of the Madaripur Independent Bench, in the district of Faridpur.

Faridpur.

No. 437J.D.—The 22nd April 1905.—The Lieutenant-Governor accepts the resignation tendered by Babu Mohatap Chandra Banerjee of his appointment as an Honorary Magistrate of the Rampur Hát Independent Bench, in the district of Birbhum.

Birbhum.

No. 496J.D.—The 22nd April 1905.—The Lieutenant-Governor accepts the resignation tendered by Babu Kishori Mohan Roy of his appointment as an Honorary Magistrate of the Suri Independent Bench, in the district of Birbhum.

Birbhum.

No. 514J.D.—The 22nd April 1905.—The Lieutenant-Governor accepts the resignation tendered by Mr. Charles Thomas Foreman of his appointment as an Honorary Magistrate of the Jamalpur Independent Bench, in the district of Monghyr.

Monghyr.

POWERS.

No. 395J.D.—The 19th April 1905.—Under the authority vested in him by section 357, sub-section 2 of the Code of Criminal Procedure, Act V of 1898, the Lieutenant-Governor empowers Babu Gopi Krishna Prasad Singh, an Honorary Magistrate of the Independent Bench at Arrah, in the district of Shahabad, to take down evidence in criminal cases in the English language.

Shahabad.

No. 458J.D.—The 22nd April 1905.—Babu Bama Churn Roy Chaudhuri, an Honorary Magistrate of the Gopalganj Independent Bench in the district of Faridpur, is vested with the powers of a Magistrate of the second class. He is also authorised to sit singly for the trial of such cases as may be made over to him by the Subdivisional Officer of Madaripur.

Faridpur.

No. 523J.D.—The 22nd April 1905.—Babu Jagobandhu Mukerjee, who has been appointed to be an Honorary Magistrate of the Municipal Bench at Baidyabati, in the district of Hooghly, is vested with the powers of a Magistrate of the third class.

Hooghly.

H. W. C. CARNDUFF,
Offg. Secy. to the Govt. of Bengal.

NOTIFICATIONS.

No. 363J.D.—The 19th April 1905.—Under section 3, Act I (B.C.) of 1876 (an Act to provide for the voluntary registration of Muhammadan marriages and divorces), the Lieutenant-Governor has been pleased to grant a license to Maulvi Kazi Mohamed Hezbullah, authorising him to register Muhammadan marriages and divorces, and to exercise the other functions of a Muhammadan Registrar within thanas Dumuria and Paikgachha, in the district of Khulna.

Khulna.

No. 364J.D.—The 19th April 1905.—Under section 2, Act XII of 1880 (an Act for the appointment of persons to the office of Kazi), the Lieutenant-Governor has been pleased to grant a sanad (license) to Maulvi Kazi Mohamed Hezbullah, appointing him Kazi of thanas Dumuria and Paikgachha, in the district of Khulna, for the celebration of marriages and the performance of other rites and ceremonies, when application is made to him to perform any such functions.

Khulna.

No. 378J.D.—The 19th April 1905.—Under section 3, Act I (B.C.) of 1876 (an Act to provide for the voluntary registration of Muhammadan marriages and divorces), the Lieutenant-Governor has been pleased to grant a license to Maulvi Wahebullah, authorising him to register Muhammadan marriages and divorces, and to exercise the other functions of a Muhammadan Registrar within thana Nalitabari, in the district of Mymensingh.

Mymensingh.

No. 379J.D.—The 19th April 1905.—Under section 2, Act XII of 1880 (an Act for the appointment of persons to the office of Kazi), the Lieutenant-Governor has been pleased to grant a sanad (license) to Maulvi Wahebullah, appointing him Kazi of thana Nalitabari, in the district of Mymensingh, for the celebration of marriages and the performance of other rites and ceremonies, when application is made to him to perform any such functions.

Mymensingh.

No. 400J.D.—The 20th April 1905.—Under section 3, Act I (B.C.) of 1876 (an Act to provide for the voluntary registration of Muhammadan marriages and divorces), the Lieutenant-Governor has been pleased to grant a license to Maulvi Syed Ahmed, authorising him to register Muhammadan marriages and divorces, and to exercise the other functions of a Muhammadan Registrar within thana Kotalipara, in the district of Faridpur.

Faridpur.

No. 401J.D.—The 20th April 1905.—Under section 2, Act XII of 1880 (an Act for the appointment of persons to the office of Kazi), the Lieutenant-Governor has been pleased to grant a sanad (license) to Maulvi Syed Ahmed, appointing him Kazi of thana Kotalipara, in the district of Faridpur, for the celebration of marriages and the performance of other rites and ceremonies, when application is made to him to perform any such functions.

Faridpur.

No. 414J.D.—The 20th April 1905.—Under section 3, Act I (B.C.) of 1876 (an Act to provide for the voluntary registration of Muhammadan marriages and divorces), the Lieutenant-Governor has been pleased to grant a license to Maulvi Saidur Rahman, authorising him to register Muhammadan marriages and divorces, and to exercise the other functions of a Muhammadan Registrar within thana Protapganj, in the district of Bhagalpur.

Bhagalpur.

No. 415J.D.—The 20th April 1905.—Under section 2, Act XII of 1880 (an Act for the appointment of persons to the office of Kazi), the Lieutenant-Governor has been pleased to grant a sanad (license) to Maulvi Saidur Rahman, appointing him Kazi of thana Protapganj, in the district of Bhagalpur, for the celebration of marriages and the performance of other rites and ceremonies, when application is made to him to perform any such functions.

Bhagalpur.

NOTIFICATION.

No 502J D.—The 22nd April 1905.—Under section 4(*l*), clause (*s*) of the Code of Criminal Procedure, Act V of 1898, the Lieutenant-Governor declares the undermentioned police outposts in the district of Champaran to be police-stations for the local areas specified :—

NAMES.	Boundaries.	Names of villages included in jurisdiction.
Segowli outpost ...	The outpost jurisdiction is bounded on the east by Shampore, Nakardai, Mansingha, Chiknouta, Bankatwa, Gidha; on the west by Bagahi, Madhopore, Madhopore Nezamat, Chilhjhapti, Bishunpurwa, Babrupia, Danditola Madhopore; on the north by Murla, Bheriharwa, Sirkhindi, Deodutwa, Punjiarwa Chhapra, Pachbhirwa; and on the south by Bhargawan, Baudha, Kobeya bazar, Madhoo Chhapra, Tikulia, Raipatti, Dumdumwa, Parsarampore, Chintamanpore	(1) Murda Chhapra, (2) Begia, (3) Tikulia, (4) Kasaria, (5) Siripore, (6) Raipatti, (7) Dumdumwa, (8) Parsrampore, (9) Bhathha, (10) Koraiya, (11) Baudha, (12) Sugawu, (13) Bhargawan, (14) Chhapra, (15) Chhagraha, (16) Phulwaria, (17) Murla, (18) Bheriharwa, (19) Chainpore, (20) Bagahi, (21) Sitalpatti, (22) Bahuari, (23) Deodatwa, (24) Karamwa, (25) Khutiarwa, (26) Parsauna, (27) Panjiarwa, (28) Raghunathpore, (29) Pach-bhirwa, (30) Ledihar, (31) Unwa, (32) Baksa, (33) Shampore, (34) Nakardei, (35) Khonra, (36) Muswa, (37) Mansingha, (38) Madhopore, (39) Chilhjhapati, (40) Madhopore Nezamat, (41) Bel-ith, (42) Lalpursa, (43) Shukul Pakar, (44) Dumri, (45) Godhigawan, (46) Kaithwalia, (47) Lain Bazar, (48) Bahroopia, (49) Dandi Tola, (50) Bangra, (51) Sapaha, (52) Dharampore, (53) Bhawanipore.
Gharasahan outpost	The outpost jurisdiction is bounded on the east by Basatpore, Sundarpore, Baijnathpore, Samanpore, Singrahia; on the west by Pipra, Jitpore, Bela, Jagirha, Majirwa, Pakaria, Gadhia; on the north by Barharwa, Balooarengania, Palahgawan, Athmohan, Jharokhor, Agarwa; and on the south by Laukhan, Nanaura, Bagaha, Phulwar, Mathia	(1) Jharakhor, (2) Tola Pithwa, (3) Barwa Khurd, (4) Tola Jagirha, (5) Tola Bhagwanpore, (6) Amwa, (7) Tola Tanwa, (8) Tola Nagarwa Narayan, (9) Bishunpore, (10) Bijhanikasla, (11) Tola Jagirha, (12) Tola Gobindpore, (13) Tola Lachhmipur Bhatlohia, (14) Tola Bhagwanpur Bhatoo, (15) Tola Baloea Rengania, (16) Tola Agarwa, (17) Tola Kairgawan, (18) Tola Athmohan, (19) Bhagwanpore Katwa, (20) Gharasahan, (21) Tola Mahuahi, (22) Tola Lain, (23) Tola Baswaria, (24) Siripore Kasla Bharhar, (25) Tola Siripore Khas, (26) Tola Bhangaha, (27) Tola Mahipal Rai, (28) Tola Birajpatti *alias* Kawaiya, (29) Tola Sundarpore, (30) Tola Baijnathpore, (31) Tola Santpore, (32) Tola Kharsalwa, (33) Tola Karaiya, (34) Tola Jamunia, (35) Tola Kuiya *alias* Balapore, (36) Basatpore, (37) Tola Bahadurpur, (38) Samanpore, (39) Tola Araria Karaiya, (40) Khurahia, (41) Tola Jagirha, (42) Tola Mahdewa, (43) Tola Bhaserwa, (44) Purnahia, (45) Tola Nagdaha Gowaria, (46) Tola Jagirha, (47) Kadamwa, (48) Tola Banarjhula, (49) Tola Nirhoo, (50) Rajwara, (51) Bijai, (52) Tola Madhubani, (53) Barwakalan Deodut Rai, (54) Tola Kasla Katcheri, (55) Barwatola Bakulia, (56) Tola Girgitia, (57) Jhajhra, (58) Tola Jitna, (59) Tola Sathawara, (60) Tola Barharwa, (61) Tola Bhawanipore, (62) Bankatwa, (63) Tola Baloea, (64) Dhanukhi, (65) Jalahgawan, (66) Sundarpore, (67) Pipra, (68) Jitpore, (69) Chandri, (70) Tola Bela, (71) Kudarkat, (72) Ghughua, (73) Champapore Kairia, (74) Semri, (75) Tola Pakahi, (76) Champapore Sapaha, (77) Tola Sapaha, (78) Bagahi Bhelwa, (79) Tola Gidhauna, (80) Tola Bhatinia, (81) Nimuiya, (82) Tola Laloea Pakharia, (83) Tola Dhumnagar Amwaria Kharjhakhia, (84) Tola Baugre Gamharia, (85) Tola Sekhauna, (86) Tola Bagaha Nagarwa, (87) Gonapakar *alias* Pakaria, (88) Tola Fatehpore, (89) Majirwa, (90) Phulwar, (91) Tola Indarwa, (92) Mathia, (93) Tola Godhia, (94) Tola Jagirha, (95) Mahuahi, (96) Nanaura, (97) Gurmia, (98) Tola Katcheri, (99) Laukhan Kasba, (100) Tola Khairwa Lachhmipur, (101) Tola Mahima Mahto, (102) Tola Shaikh Bakhsh, (103) Tola Karaiya, (104) Singrahia.
Pipra outpost ...	The outpost jurisdiction is bounded on the east by Chakia, Imadpatti Tarania, Bara Gobind, Ahirawlia Basha, Paithania Barmania, Balo Chak, Bharthuya, Narhar Pakri, Pakri Gopal *alias* Ghausampakri, Balwa; on the west by Ramgadhwa, Mahuawa, Harpore, Mothurapore, Math Banwari, Rathanpore, Mahamada, Sirsia, Pakri Asag, Sariyatpore, Jagirha, Bhagwanpore, Sagar, Sahanpoora; on the north	(1) Bara Gobind, (2) Balo Chak, (3) Barmadia, (4) Baisaha, (5) Semra, (6) Parsauni Khem (7) Parsauni Khem Arasi Nankar, (8) Parsauni Arasi Birt, (9) Math Parmeshar, (10) Parsauni Khem Arasi Nankur, (11) Dhobwalia, (12) Deya Chhapra, (13) Uchidih, (14) Math Garib, (15) Padri Harnath, (16) Ramkaran Pakri, (17) Laukaha, (18) Birdaban Siswa, (19) Phulwaria *alias* Tajpur Lakhani, (20) Gheghti, (21) Bishunpore *alias* Kuwawan, (22) Chakia, (23) Halimnagar Tarnia, (24) Bherkhia, (25) Amwa, (26) Chaknia, (27) Madhubon Bediban, (28) Tikulia, (29) Sita Kund, (30) Jahingra, (31) Pipra, (32) Damodarpore, (33) Bishunpura, (34) Kundia Kalan, (35) Mahuawa Kathi,

Names.	Boundaries.	Names of villages included in jurisdiction.
	by Bherkhia, Amwa, Tikulia, Khairi, Jamunia, Bairia, Banparia; and on the south by Madhurapore, Math Garib, Parri Harnath, Birdabon Seswa, Parsaunitola, Gheghti, Kuawan.	(36) Koirgawan, (37) Bairia, (38) Balwa, (39) Chak Bara, (40) Chak Barabirt, (41) Bharthuiya, (42) Narhar Pakri (43) Pakri Gopal, *alias* Ghan Shampakri, (44) Arazibirt Pakri, Gopal, (45) Gashainpore, (46) Khairi Mal, (47) Khairi Jagir, (48) Jamunia, (49) Chintomanpore, (50) Ramgarh Jala Madhabon. (51) Chintamanpore tola Madhupore, (52) Arazi Sisai tola Math, (53) Hassanpore, (54), Narayon Pakri, (55) Bhagwanpore, (56) Sisoi Jagir, (57) Madhurapore, (58) Sohanpore, (59) Sagar, (60) Parsauni Kishun, (61) Hadiabad, (62) Sirsia, (63) Maharani, (64) Uchidih, (65) Lakai Belwa, (66) Jagirha Khurd, (67) Birt Lakai Belwa, (68) Ramgadh, (69) Mahuwa Mokarri, (70) Harpore, (71) Baugri, (72) Kundia Khurd, (73) Sariatpore, (74) Arazi Sariatpore, (75) Waqe Rakba, Pakri, (76) Dumri, (77) Pakri Asag, (78) Barwa, (79) Jala Kudar Khan Barwakalan, (80) Phulwaria Parsarampore, (81) Rattanpore, (82) Mathurapore, (83) Bathna, (84) Mahamada, (85) Sirsia, (86) Arazi Pakri Asog *alias* Pakri Nankar, (87) Pakri Asog tala Nihaltiwari, (88) Kuarpore, (89) Parsarampore, (90) Phulwaria Bisrampore.
Jharadauo outpost	The outpost jurisdiction is bounded on the east by Juafar, Dhapahar patti saraiya, Kudarkat, Tola Baijnathpore, Tala Raghunathpore, Tola Lachhumannagar, Tola Dharamnagar, Dhapahar patti Hardia saraiya; on the west by Tola Kurminia, Tinkoni, Darpa, Jitpore, Mathiabirt, Hiramni, Parsotimpore, Tola Banjari; on the north by Tola Haleemannagar, Tola Bind basni, Tola Parsa, Katkenwa, Chandarman, Pach Pokharia; and on the south by Duho Suho, Fatooha, Semrahia, Pakaria, Chainpore, Kataharia, Tola Malahi.	(1) Pach Pokharia, (2) Kurminia, (3) Jhitkahia, (4) Tikulia, (5) Chandarman, (6) Tinkoni, (7) Darpa *alias* Sukhlahia, (8) Mathia, (9) Jitpore Tola Hardia, (10) Gonahi, (11) Hisamni, (12) Parsotimpore, (13) Tola Banjari, (14) Duho Suho, (15) Phatuha, (16) Semrahia, (17) Pakaria, (18) Chainpore, (19) Jainagar *alias* Katharia, (20) Jainagar, (21) Masahi, (22) Bela, (23) Khairwa, (24) Dhapahor utarwari, (25) Dhapahor patti Hardia, (26) Dhapahor Tola Ramnagar, (27) Juafor, (28) Kudarkat *alias* Baijnathpore, (29) Kudarkat Tola Dusadh, (30) Tola Rampore, (31) Ekdari, (32) Tola Gadhal tola Barhampura (Chhoroduro), (33) Bakhri, (34) Letihanwa, (35) Bhelwa, (36) Bhelwa *alias* Raghunathpur, (37) Katkenwa, (38) Parsa, (39) Mahuawa Tola Imilia, (40) Bindbasni, (41) Halumannagar, (42) Dharmnagar, (43) Dharhari, (44) Budhuaha, (45) Lachhumannagar, (46) Dhapahar patti, (47) Murli, (48) Siripore.
Raxaul outpost ...	The outpost jurisdiction is bounded on the east by Raxaul Khas, Dhangarhwa Tola, Lonkaha Tola Dhangarwa, Sirampore Tola, Reghauta Tola Hardiya, Manna Tola, Rattanpore Tola; on the west by Bahooari, Babooia Tola, Parsauna, Sirisia, Lonkaria, Piparia, Belwa, Anandiganj, Bharwalia, Purandra, Parsawa, Bhelahi, Musharwa; on the north by Kukuhia Tola, Siswa, Bhartanahi, Bhaloonha, Dhupwa Tola, Ekderwa, Haraiya, Parastoka; on the south by Gamharia, Uchidih, Dhanhar (tola Ramgarhwa Bazar), Dihuli, Gurhanwa, Ramgarhwa Bazar, Satpipra Tola, Siswania, Sihorwa, Ramgarhwa Mouza, Bela, Belaspore Tola, Bhainsara Tola, Pachbhiria, Katkenwa, Tirbeni, Bherihari, Piparpati Tola, Adhkaparia, Murgia Tola, Phulwaria, Singasani.	(1) Bharat mahi, (2) Tola Bhaloonha, (3) Tola Santakhiraut, (4) Bairia birt Matalke Bhartmahi, (5) Tola Dhupwa, (6) (7) Cokderwa, (8) Sihpore Matalke Haraiya, (9) Tola Katchehri, (10) Haraiya, (11) Tola Sukhal, (12) Tola Nanka, (13) Pantoka, (14) Tola Hajma, (15) Raxaul, (16) Tola Tumaria, (17) Tola Ahira, (18) Tola Kairia, (19) Dhangarahwa batohi, (20) Dhangarahwa Tola Khekharia, (21) Kanrihar, (22) Tola Bazar, (23) Tola Bhagwanpore, (24) Tola Lachhmipore, (25) Tola Jaipal Dhangar, (26) Tola Lankaha, (27) Parena Matalke Dhangarahwa, (28) Tola Tumaria, (29) Tola Nanhak, (30) Jokiari, (31) Tola Jatiani, (32) Tola Sitalpore, (33) Chikni, (34) Choukuli, (35) Siswa, (36) Tola Bhairobhagat, (37) Katchari Tola, (38) Kowa Dhongar, (39) Lachmipore, (40) Tola Belaspore, (41) Tola Noniawa, (42) Chamartali, (43) Lachhumanwa, (44) Tola Tilak raut, (45) Tola Chamar Toli, (46) Jatiahi, (47) Tola Sitalpore, (48) Khirlichia, (49) Siharwa, (50) Parsotimpore *alias* Kanna, (51) Tola Sitalpore, (52) Tola Dumaria, (53) Tola Ahirwa, (54) Senduaria Matalke Hardia, (55) Hardia, (56) Tola Kathi, (57) Nanka Tola, (58) Tola Rattanpore, (59) Tola Kadamwa, (60) Tola Raghanta, (61) Gamharia, (62) Nanka Tola, (63) Tola Mahadeo Rai, (64) Chamar Toli, (65) Masnadih Motalke Harnahi, (66) Sawanha, (67) Tola Jaimanglapore, (68) Harnahi, (69) Tola Ganha Kalan, (70) Tola Ganha Khurd, (71) Tola Chainpore, (72) Uchidih, (73) Kharkatwa, (74) Tola Pachheari, (75) Tola Durganagar, (76) Kalikapore, (77) Pakhuria deh, (78) Semri, (79) Tola Mahabir Upadhya, (80) Kharwa, (81) Munda, (82) Bichla Tola, (83) Sidhpore, (84) Tola Balchand, (85) Tola Jadhan, (86) Palanwa, (87) Tola Parsarampore, (88) Tola Badhi (89) Tola Gangapore, (90) Tola Jagdhar Faqir, (91) Tola, Bhaloo Ahi, (92) Tola Jagdhar, (93) Tola Jagdhar Dabar, (94) Tola Bahuarwa, (95) Tola Bharwalia, (96) Bhelahi, (97) Tola Musharwa, (98) Tola Kachorwa, (99) Nanka Tola, (100) Tola Parsauna, (101) Purandra, (102) Tola

NAMES.	Boundaries.	Names of villages included in jurisdiction.
		Janki Rai, (103) Tola Bharwalia, (104) Tola Anandiganj (105) Belwa, (106) Piparia, (107) Netuawa Tola, (108) Lankaria, (109) Tola Gopal Rai, (110) Tola Bairia (111) (112) Tola Lachhnanta, (113) Tola Dukhit Rai, (114) Tola Hulas Rai, (115) Tola Baijoo Rai, (116) Tola Lachhmipore, (117) Tola Juthan Mahto, (118) Tola Pakhrabar, (119) Lachmipore, (120) Pakhnahia, (121) Tola Purbari, (122) Sirsia Nezam, (123) Tola Musehri, (124) Sirsea, (125) Tola Ghusukpore, (126) Bagri Sirsia, (127) Parsauna, (128) Tola Bahua, (129) Tola Lachhmipore, (130) Tola Gadiani, (131) Bahuari, (132) Tola Durbalahir, (133) Tola Gopalpore, (134) Tola Sh. Arsani, (135) Phulwaria, (136) Tola Parsurampore *alias* Murgia Tola, (137) Tola Adhkaparia, (138) Tola Piparpanti, (139) Siswania, (140) Jaitapore, (141) Tola Binwa, (142) Tola Dhobia, (143) Tola Chamar Toli, (144) Tola Dhusadh Toli, (145) Gadhwa, (146) Sukhi Semra, (147) Tola Dainwa, (148) Kahbarwa, (149) Basti, (150) Tola Sahebdin (151) Tola Manorath, (152) Ahirwalia, (153) Tola Birta, (154) Tola Gularia, (155) Tola Manj, (156) Tola Rakhwaria, (157) Tola Lachhuman, (158) Tola Pithwa, (159) Tola Sheopore, (160) Tola Dubwalia, (161) Tola Murgia, (162) (163) Tola Binwalia, (164) Belwapiparia, (165) Singasani, (166) Tola Bherihari, (167) Tola Dakhinwari, (168) Tola Nandlali, (169) Tola Tirbeni, (170) Tola Semra, (171) Katkenwa, (172) Matalke Bela, (173) Bela, (174) Tola Utarwari, (175) Tola Hulas, (176) Tola Belaspore, (177) Tola Sarwar, (178) Tola Pachhhiria, (179) Tola Bhaisara, (180) Siharwa, (181) Siswania, (182) Tola Parparia, (183) Tola Pakhra, (184) Tola Dakhinwari, (185) Bandhoo Barwa, (186) Sakrar, (187) Tola Dastia, (188) Tola Hasanpor, (189) Tola Bazar Sakrar, (190) Tola Bardiha, (191) Tola Baloda, (192) Tola Bahuari, (193) Tola Musahri, (194) Ramgarhwa, (195) Kathi Tola, (196) Nankathwa, (197) Ramgadwa. (198) Lachhmipore, (199) Dhanhar Dihooli, (200) Bandha Tola, (201) Gurhanwa Tola, (202) (203) Bhaloa Ahia, (204) Tola Malahi, (205) Sheenagar *alias* Satpipra, (206) Tola Sirampore Matalke Hordiya.
Madhuban outpost...	The outpost jurisdiction is bounded on the east by Kauria, Kajaraha Delaho, Rohuaman, Maniarpore, Semraha Khas, Kadwa, Balbhadarpore, Narha Pánápore, Saraiya, Meghoca, Sagahari, Hasanpore, Narainpore, Nakardewa, Sonwal, Rajepore, Bishunpore Bara, Jhit Kahia, Kashi Pakri, Bariara, Birt Kuwawan, Abadia, Hardopatti, Kuwawan, Fatehpore, Kaleyanpore, Ismaila, Meghoca; on the west by Jitoura, Manpore, Tola Bhagwanpore, Tola Doma ghat, Chowbey Tola, Nandiram Chhapra, Balo Kurgawan, Nankar, Bijdharia, Tola Palat, Tola Sawangia, Manripore Malik, Manpore, Saraiya, Harpore Nag, Harpore, Nankar, Rangrez Chapra, Damodarpore, Sarsabad, Bisambharpore, Partapore, Majhawlia, Chak Dangraha, Chouria; on the north by Dulhma, Chainpur, Tala Ranipore, Nawrangia, Tala Dib, Hardia, Kishunkora; and on the south by Dangarha Bishunpore, Mahmada, Mahamadpore Malik, Dewajit, Rajuwa, Bakhri Nasir, Chak Fatkullah, Kathia Harnam, Semraha, Mahamadpore, Salempore, Mano Chak, Bhurkurwa, Galimpore, Bakhri, Nenimal.	(1) Khas Madhuban, (2) Tola Dihoo tola, (3) Saraiya, (4) Banki tikam, (5) Kishun kara, (6) Tola Lahi, (7) Tola Banjaria, (8) Mangroo Bara, (9) Gangapore, (10) Bhownrua, (11) Talimpore, (12) Bishunpore tara, (13) Nanhkar, (14) Tola Kana Pakri, (15) Tola Hariharpore, (16) Hardia, (17) Dubaha *alias* Dostia, (18) Arazi Barhampoora, (19) Tola Birta, (20) Lahargawan, (21) Kailahra, (22) Semra, (23) Tola Mahawta, (24) Bhagwanpore Matalke Jogowlia, (25) Tola Palat Matalke Jogowlia, (26) Tola Clitaha Matalke Jogowlia, (27) Tola Chaubey Matalke Jogowlia, (28) Tola Birti Matalke Jogowlia, (29) Gurhmia Matalke Jogowlia, (30) Tola Nankar Matalke Jogowlia, (31) Tola Pakaria Matalke Jogowlia, (32) Tola Palat Matalke Jogowlia, (33) Tola Godhia Matalke Jogowlia, (34) Chainpore Matalke Jogowlia, (35) Ranipore Matalke Jogowlia, (36) Moglania Matalke Jogolia, (37) Narayanpore Matalke Jogowlia, (38) Tola Bagahia Matalke Jogowlia, (39) Kasba Jogowlia, (40) Dama ghat Matalke Jogowlia, (41) Tola Gulab Khan Matalke Jogowlia, (42) Nandiram Chhapra Matalke Jogowlia, (43) Tola Indarwa Matalke Jogowlia, (44) Tola Paterhwa Matalke Jogowlia, (45) Rupni Matalke Jogowlia, (46) Tola Kharsal Matalke Jogowlia, (47) Tola Machhaha Matalke Jagowlia (48) Arazi Bijdhari Matalke Jagowlia, (49) Bhelwa Matalke Jogolia, (50) Madhopore Matalke Jogowlia, (51) Marua dih Matalke Jogowlia, (52) Tala Buchi Matalke Jogowlia, (53) Tala Sheopore Matalke Jogowlia, (54) Dulhma, (55) Jitoura, (56) Naurangia, (57) Jala Dih Naurangia, (58) Jala Gopalpur Matalke Naurangia, (59) Jala Taksari Matalke Naurangia, (60) Jala Budhowlia Matalke Naurangia, (61) Khodadpore, (62) Koilahra Math, (63) Manripore Malik, (64) Manpoorwa, (65) Tola Subli Matalke Manpurwa, (66) Manripore, (67) Tola Jhagaroca Matalke Manripur, (68) Tola Talwa Matalke Manripur, (69) Tola Nagargawan Matalke Manripur, (70) Tola Garahia

NAMES.	Boundaries.	Names of villages included in jurisdiction.
		Matalke Manripur, (71) Tola Terhi Matalke Manripur, (72) Sawangia, (73) Rampurwa, (74) Saraiya, (75) Ghariari Chak, (76) Mahalat Chhapra, (77) Manjhan Chhapra, (78) Bhatwalia, (79) Subman Chhapra, (80) Dhargawan, (81) Chhapra Majahid, (82) Parsauni, (83) Mahamadpore Malik, (84) Bishunpore Basant, (85) Tola Chakdagarha, (86) Tola Chawria, (87) Chak Taloo, (88) Samaspoora, (89) Chhapra Gabind, (90) Kasba Gopal, (91) Rangrez Chhapra, (92) Damadarpore, (93) Harpore Nag, (94) Harpore Nankar, (95) Tola Bhimlapore Matalke Harpore, (96) Bisambharpore Maruabad, (97) Bisambharpore, (98) Balo Bisambharpore, (99) Mahanandpore *alias* Madhubani, (100) Rampore Shankar, (101) Sursabad Barharwa, (102) Partapore, (103) Tola Majhawlia, (104) Mahmada *alias* Chak Masrut, (105) Tola Dewajit, (106) Purani mehsi, (107) Mirzapore, (108) Khas mehsi, (109) Kasi Chak, (110) Bahadurpore, (111) Man Mehsi (112) Bahbal Chhapra, (113) Chak Ghariari, (114) Tola Imilia, (115) Chak Madari, (116) Hasanpore Ahmad, (117) Tola Tara Pakar Matalke, (118) Chak Madari, (119) Bathna, (120) Tola Burji Matalke Bathna, (121) Ibrahimpore, (122) Ujilpore, (123) Chak Feda Ali *alias* Barharwa, (124) Sarai Kasim, (125) Chak Abdulgani, (126) Bakhri, (127) Chak Shamsuddin, (128) Chak Syed Ahmad, (129) Chak Fatehullah (130) Chak Rasool, (131) Kathia Hariram, (132) Chak Lahuran, (133) Tola Purjahi Matalke Chak Lahuran, (134) Chintamanpore, (135) Tajpur Bara, (136) Sarai Shah Nagar, (137) Kataha, (138) Chak Nagri, (139) Tola Semra, (140) Bhimalpore, (141) Tola Bhimalpore, Lachhminia, (142) Sahbajia Nania Chak, (143) Tola Darwa Matalke Sahbajia, (144) Madhapore Kesho Shedhar Pershad, (145) Madhapore Kesho, (146) Madhapore Nankar, (147) Madhapore Phulwaria, (148) Tala Barkoorwa, (149) Madhapore Kesho, (150) Rajoowa Bakhri (151) Amwa Matalke Kathia Hariram, (152) Kankati Matalke Kathia Hariram, (153) Mithanpoora Khedhoo Singh, (154) Mithanpoora Ranglal Sah, (155) Mithanpoora, (156) Mahamadpore, (157) Tola Majhowlia Matalke Mahamadpore, (158) Salempore, (159) Tola Bulaki, (160) Kairgawan, (161) Balatala, (162) Bhagawatia, (163) Dhelooaha, (164) Sidhowlia, (165) Tola Ankraha Matalke Sidhowlia, (166) Bhuali dih *alias* Bhawanitola, (167) Bhurkurwa *alias* Bishunpur Harihar, (168) Mano Chak (169) Ismaila, (170) Kailanpur, (171) Bakhri, (172) Bishunpur Bhual alias Meghua, (173) Tola Nonmal Matalke Ismaila, (174) Parsaunia, (175) Kunawan, (176) Birt Kunawan (177) Fatehpore, (178) Abadia, (179) Hardopatti, (180) Kashi Pakri, (181) Jhitkahia, (182) Tola Baboorban, (183) Ranipatti, (184) Mathia, (185) Bishunpore bara, (186) Ahiharan Chhapra, (187) Galimpore, (188) Rajepore, (189) Sonwal, (190) Thethra, (191) Tejpore Saraiya, (192) Pipra Ahiman, (193) Tola Kalwari, (194) Maduaha birt, (195) Tetaria, (196) Mahamadpore Sagar, (197) Madhapore Hari, (198) Fazilpore, (199) Pipra makhan, (200) Tola molnapore Motalke Fazilpore, (201) Dhabaulia, (202) Bishunpore, (203) Gheghwa, (204) Bhagwanpore, (205) Bahuara, (206) Bajitpore, (207) Tola Maniapar, (208) Punndar, (209) Simwli, (210) Kathia, (211) Punaa, (212) Lahladpore, (213) Chak Chowhans *alias* Khairwa, (214) Tajpore Nazir *alias* Gadahia, (215) Chowhania, (216) Harnarayanpore, (217) Manikpore, (218) Semraha, (219) Semraha Nankar, (220) Maniarpore, (221) Tola Surtabad, (222) Kadwa, (223) Khairwa, (224) Sobhita, (225) Padmoul Bishunpore, (226) Balbhadarpore, (227) Balbhadarpore Nankar, (228) Haloomannagor Matalke Balbhadarpore, (229) Narha, (230) Tola Panapore Matalke narha, (231) Narha Nankar, (232) Meghua, (233) Tola Saraiya, (234) Sagahri, (235) Ujhilpore, (236) Hasanpore, (237) Chhapra Chheni, (238) Narayanpore, (239) Tola Ramnath Sah, Matalke Narayanpore, (240) Tola Majhuar Matalke Narayanpore, (241) Bishunpore Nakardewa, (242) Bahuara Ramnarayan Singh, (243) Bahuara Gopi Singh, (244) Delho, (245) Rohua, (246) Kajraha, (247) Tola Miriasi, (248) Kawria.

Names	Boundaries	Names of village included in jurisdiction.
Rajghat outpost ...	The outpost jurisdiction is bounded on the east by Rulahi Nazamat, Madhapore, Rampurwa, Thawaiya, Bahuarwa Chak Thawaiya, Bahuarwa, Tola Gudra Bahuarwa, Parsa; on the west by Mahna Gani, Chaila Bhar, Mahiuddinpore, Amwa Majhar, Rampore Bairagi, Bharwalia, Rattanmala, Chanain bandh, Khutia, Bairagi Bisambharpore, Bisambharpore, Tola Malooka, Tola Mohni; on the north by Rampurwa, Rampurwa tola Mohanwa Harpur, Harpore, Semra Ghat, Dhankutwa, Pipra Dubey, Sariswa, Tola Khap Bankat; on the south by Pakri Hari, Tola Ramnagar Bankat amwa Majhar, Awhar Shaikh, Kundia, Parsatimpore, Karmwa II, Karmwa I, Raja Bhar.	(1) Tola Bairagi in Bisambharpore, (2) Bisambharpore, (3) Malookatola, (4) Mahna Gani, (5) Chaila bhar, (6) Chanain bandh, (7) Khutia, (8) Ratan Mala, (9) Tola Utim Pandey, (10) Tola Musahri Matalke Ratan Mala, (11) Bharawlia, (12) Tola Khap Bankat Motalke Ratan Mala, (13) Sariswa, (14) Pipra Dubey, (15) Mathia *alias* Bhatwalia, (16) Pakri Parsaram, (17) Dudha Chaturi, (18) Mathia Ojha, (19) Dhankutwa, (20) Baghamarpore, (21) Barwa Tola, (22) Semra Ghat, (23) Harpore, (24) Rampurwa, (25) Raghunathpore, (26) Semra Birt, (27) Mathia Birt Bandobasti, (28) Mathia Birt, (29) Bakhabra, (30) Nautan Khurd, (31) Dudha, (32) Dhokaraha, (33) Bhaloohi, (34) Gurchurwa, (35) Majhwalia, (36) Mohundinpore, (37) Basra, (38) Tola Mahanth, (39) Pakri Hari, (40) Sat Bhindwa, (41) Bhana Chak, (42) Ramnagar, (43) Amwa Majhar, (44) Tola Jagarnathpur Motalke Amwa Majhar, (45) Rampoor Bairagi, (46) Kuria, (47) Parsotim pur, (48) Awnhar Shaikh, (49) Majharia Shaikh, (50) Lalsaraiya, (51) Tola Gohra Motalke Bhana Chak, (52) Baithania, (53) Narainpore, (54) Arasi Nankar Matalke Parsa Bandobasti, (55) Ojhwalia Matalke Parsa, (56) Patkhawlia Motalki Parsa, (57) Thawaiya, (58) Belaspore, (59) Kurmitola, (60) Tola Gudra Motalke Bahuarwa, (61) Bahuarwa, (62) Madhopore, (63) Kathiya, (64) Semanaria, (65) Bakharia, (66) Shampore, (67) Serukahia, (68) Parsa, (69) Bahuarwa Chak Thawaiya, (70) Jawkatia, (71) Raja Bhar, (72) Karmawa I, (73) Karmawa II, (74) Rulahi Nazamat, (75) Parsa Dih, (76) Parsa IV (77) Rampurwa.
Bhownra outpost ...	The outpost jurisdiction is bounded on the east by Bhawrah, Bhawri, Parsa, Dhurampur *alias* Hariharpur, Tola Pursotimpur, Kangli, Senooarea, Basatpur, Bherihurwa, Inurwa, Bishunpurwa, S. E., Gambaria, S E.; on the south by Sanbursa, Purainia Dih, and Tola Kadamwa, Sunurgaon, Sargattia, Tola Pursawna Mutalka Ghaga, Tola Tegrahia and Gopalpur, on the west by Nurkatia, Dhunkutwa, Bairagia, Gouripur; and on the north by Nepal Terai.	(1) Surajpore, (2) Bhawanipore, (3) Hariharpore, (4) Sikta Persatimpore, (5) Parsarampore, (6) Mathia, (7) Kangali, (8) Seud, (9) Basantpore Bheribarwa, (10) Bahuarwa Sabaithwa, (11) Inwarwa, (12) Masjid Bishunporwa, (13) Bhawanipore, (14) Majharia, (15) Sugaha Madhopore, (16) Talu Satwaria, (17) Gamharia, (18) Balthar, (19) Kharsahwa, (20) Bhoura, (21) Bhouri, (22) Shikarpur, (23) Tola Lachmipur, (24) Jaisinghpur, (25) Kursi Barwa, (26) Parsa Masaha, (27) Mangalpore, (28) Chapainia, (29) Sirisia, (30) Lalparsa, (31) Behra, (32) Jhamka, (33) Lathiahi, (34) Mainpore, (35) Sargatia, (36) Tola Dakahi Munjawna, (37) Tola Dukhi, (38) Maglahia, (39) Luathaha Siswania, (40) Patkhawlia, (41 Sanbarsa, (42) Purainia Maheera, (43) Sundargawan, (44) Parsauna Mir akloo, (45) Tola Tengrahia, (46) Gopalpore, (47) Bahuarwa Naniawatola Chhardwali, (48) Gularia Mahmadwa, (49) Machhaha Ekdari, (50) Gauripore, (51) Murli, (52) Parsauni, (53) Gharcharhi, (54) Tola Purainia (55) Dhankatwa, (56) Tola Bairagia, (57) Jagarnathpur, (58) Baisakhuia, (59) Jhakara, (60) Ausanpur, (61) Parsauni Patukahia
Ramnagar outpost...	The outpost jurisdiction is bounded on the east by Arasi Pipra, Moheshpore, Babhni, Bigiri, Sigiri, Ghorpakri, Jharharwa, Lakhankhor, Sohsa, Pipra; on the west by Gordi, Naurangia, Parewadah, Gobrahia, Dhakahanwa, Hariharpore, Siswa, Santpore, Churiharwa, Gudgudi, Khatauri, Khiria, Pakri, Khirsana, Phulwaria, Pipra; on the north by Majuraha, Dhayar, Betahani, Bhulbhulia, Karmahia, Bankatwa, Dhobaha, Serhwa, Narkatia, Kathaha, Banraha, Raghia, Banbari, Damrapore, Dumri, Nautanwa, Sakhuani, Gabardhana, Ghora ghat Kharahni, Bankatwa, Pokharia, Harpore, Konghusri, Phulkawal; and on the south by Murera, Mahuye, Serhwa, Bahooari, Jogia, Hardia, Sabeya, Murli Dih, Mangurha,	(1) Chargharwa, (2) Nangawan, (3) Jogia, (4) Pakri, (5) Maguraha, (6) South Kalanchi Dih, (7) Pakari, (8) Belwa, (9) Sikta, (10) Baikunthwas,—(11) Bishunpurwa, (12) Pachrukhia, (13) Bahuari, (14) Bargajwa, (15) Murera, (16) Mahooi, (17) Sabeya, (18) Hardia, (19) Murli Dih, (20) Serhwa, (21) Semra, (22) Bargo, (23) Chhowgharia, (24) Lakan Khor, (25) Sohsa, (26) Belowra, (27) Semri Dih (28) Sihpurwa Dih, (29) Tawlaha, (30) Dioolia, (31) Singari, (32) Bigari Dih, (33) Babhuni Dih, (34) Moheshpur Dih, (35) Doobaulia, (36) Phulwaria, (37) Dhobini Dih, (38) Gawanro Dih, (39) Gawanra Dih, (40) Dhokraha, (41) Narainpur, (42) Pipra, (43) Arasi Pipra, (44) Babhnawli, (45) Shaikhpurwa, (46) Phulkaul, (47) Konghusri, (48) Bargo, (49) Silwatia, (50) Barwa, (51) Purandarpore Dih, (52) Chainpore Dih, (53) Ghorpakri Dih, (54) Jharharwa Dih, (55) Barwa Banjaria, (56) Kot Banjaria, (57) Chikni Banjaria, (58) Chhigurahi Banjaria, (59) Mathia, (60) Khajuria, (61) Gidha Dih, (62) Kat Sikri, (63) Sarhatwa Dih, (64) Matiaria, Dih Khurd, (65) Matiaria Dih Kalan, (66) Murla *alias* Harinagar, (67) Meghwal, (68) Majura, (69) Sonkhar, (70) Harpur, (71) Kumia Khurd, (72) Bara Belwa, (73) Harkalia Dih, (74) Imirti Katharwa Dih,

NAMES.	Boundaries.	Names of villages included in jurisdiction.
	Koilanchi, Bargazwa, Pakri, Chargharwa, Nawgawan.	(75) Kuria, (76) Phulwaria, (77) Khatori, (78) Khiria (79) Pakari, (80) Khirsinda Dih, (81) Dain Marwa, (82) Pipra, (83) Dhanarna, (84) Ratanparwa Dih, (85) Pipra Mali, (86) Pipra Dih, (87) Jamunia Dih, (88) Palia, (89) Pathri, (90) Sewarahi, (91) Singahi, (92) Bahuari, (93) Bela, (94) Belwa Makarri, (95) Beli, (96) Bhawal, (97) Bhawnahar Dih, (98) Ramnagar, (99) Sabooni, (100) Kachohani, (101) Kumia, (102) Kharahni Ghora Ghat, (103) Manjerwa, (104) Kathha, (105) Gabardhana, (106) Gudgudi, (107) Churiharwa, (108) Gabarahia, (109) Bairia Dih, (110) Parewadah Dih, (111) Jharharwa, (112) Sawnaha, (113) Dakhanwa, (114) Narkatia, (115) Kataha Dih, (116) Banraha Dih, (117) Nawrangia, (118) Manjuraha, (119) Gardi, (120) Parsauni, (121) Bakhri Pachrukhia, (122) Paloca Bakhraha, (123) Phagnoohata, (124) Jabka, (125) Sapahi, (126) Churiharwa, (127) Madhubani, (128) Samahuta Dih, (129) Barwa, (130) Bankatwa, (131) Pokharia Dih, (132) Bagahi, (133) Nawtanwa, (134) Dumri, (135) Sakhuani, (136) Damrapore, (137) Kanghusari, (138) Bakwa Barwa, (139) Beru Kahani, (140) Jhankol Barwa, (141) Betahani, (142) Dhair, (143) Bankatwa, (144) Dhabalia, (145) Bhulbhulia, (146) Pipra, (147) Belatari, (148) Karmahia, (149) Jhajhari, (150) Rupa Walia, (151) Serhwa, (152) Sitalbari, (153) Raghia, (154) Banwari, (155) Hariharpore, (156) Siswa Barwa, (157) Santpore, (158) Chamradiha Bhargawn.
Lauria outpost ...	The outpost jurisdiction is bounded on the east by Sathi, Dumdumwa, Sibpur, Chahardewali, Basantpore, Satwaria, Bandh tola Luchhnauta, Lachhnauta, Lachhmipur, Bindraban, Parsauna, Maulanagar, Jawahirpur, Gakhula; on the west by Phulwaria, Bishunpurwa, Siswania, Ganauli, Bheriharwa, Sitapore, Parsauni, Telpore; on the north by Indar Barwa, Letiha, Damra, Deurwa, Paswaria, Gowanha, Dumdumwa, Muraria, Pakri, Nankar, Lakar, Matiaria, Gabrowra, Jamunia, Nonipakar, Khap Katahri, Gonahi, Dhorampore, Richhopal, Rai Barwa; and on the south by Paraoo tola, Parsa, Mangutha, Parri, Loharpattia, Mathia.	(1) Indar Barwa, (2) Indar Barwa Letiha, (3) Telpore, (4) Dumra, (5) Decoria, (6) Bindapatti *alias* Jhandapatti, (7) Parsauna Dih, (8) Gabufuha, (9) Kalhwalia, (10) Baswaria, (11) Gawanra, (12) Gawanra *alias* Sahoostar, (13) Pakri Dih, (14) Pakri, (15) Lakar, (16) Sisai, (17) Dhobini, (18) Ramauli, (19) Belwa, (20) Sikta, (21) Bakulahia, (22) Lakhni *alias* Lipni, (23) Chainpatia *alias* Bakulahia, (24) Barbiro, (25) Bheriharwa, (26) Gadouli, (27) Siswania, (28) Barwa, (29) Dhadhwa, (30) Pakri, (31) Lauria, (32) Belwa, (33) Dabalia Thakur tola, (34) Mathia, (35) Patrown, (36) Bishunpurwa, (37) Phulwaria, (38) Lawharpatia, (39) Dumra, (40) Mathia, (41) Parari, (42) Maghuraha Khurd, (43) Maghuraha Salik Chaubey, (44) Parsa, (45) Paraoo tola, (46) Bankatwa, (47) Baswaria, (48) Jiria, (49) Dorboulia, (50) Lakhaupur, (51) Gokhula, (52) Ram Parsanna, (53) Bahuarwa, (54) Soosar Chhap, (55) Gabraura, (56) Matiaria, (57) Bakhloohan *alias* Baikunthpur, (58) Jamunia, (59) Nanipakar, (60) Katahri Khap, (61) Khajuria, (62) Jala Nand Pandey, (63) Gonahi, (64) Bogh Gonahi, (65) Dharampore, (66) Musehri, (67) Dhobini, (68) Jawahirpore, (69) Jawahirpore *alias* Maulanagar, (70) Parsauni, (71) Brindaban, (72) Lachhmipur, (73) Lachhnanta, (74) Barwa Kalan, (75) Langra Barwa, (76) Barwa Rai, (77) Sathi, (78) Sawaria, (79) Bharaura, (80) Dumdumwa, (81) Sibpur, (82) Basarpur, (83) Sakrahia *alias* Chardewali, Santpur.
Mainatar outpost ...	The outpost jurisdiction is bounded on the east by Bhangaha, Nagardehi, Inerwa, Khamia, Semar Bari, Bhelwahia, Basatpore, Babhnowlia Bheriharwa, Pakooabeni, Tilangahi Barharwa; on the west by Lipni, Inerwa, Purnea, Panchamwa, Bhaluchwa, Damrapore, Lakar; on the north by Chakarsain, Dhumatar, Ahira Siswa; and on the south by Parsotimpore, Lachhmipore, Bharbharwa, Suklahi.	(1) Tilangahi, (2) Narkatia, (3) Parsa (4) Pakuahwa Pachhim, (5) Pakuahwa Purbari, (6) Parsatimpore, (7) Paliramporo, (8) Bahuarwa Nackched, (9) Bhaluahia, (10) Bharbharwa, (11) Bherihari, (12) Bheri Harwa, (13) Marjadwa, (14) Madhuri, (15) Mahuawa, (16) Lachhmipore, (17) Sihpore, (18) Suklahi, (19) Sugrawa, (20) Asogwa, (21) Dhabini, (22) Pipra Santpore, (23) Basha, (24) Basatpore, (25) Belwania, (26) Babhnawli, (27) Bhaluhia, (28) Mainatar, (29) Majharia, (30) Ram Nagri, (31) Rampoorwa, (32) Langri, (33) Lipni, (34) Oderwa, (35) Inerwa, (36) Inarwa Sani, (37) Khamhia, (38) Jhajhri, (39) Deolia, (40) Nagardahi, (41) Pidari, (42) Purainia, (43) Piparpanti, (44) Padmaul, (45) Bahuarwa Ostad, (46) Baudh Barwa, (47) Bairia, (48) Bhat Kaul, (49) Singasani, (50) Sakraul, (51) Sabiya, (52) Ahira Siswa, (53) Gharpakri, (54) Chauhata, (55) Jasauli, (56) Damrapore, (57) Dhumatar, (58) Pachrukhi, (59) Parsauni Lachhuman, (60) Shahpore Parsauni, (61) Belwi, (62) Barwa, (63) Bhangha, (64) Bhatuahwa, (65) Rampore, (66) Lankar, (67) Senuaria, (68) Sahnaula, (69) Harpore.

NAMES.	Boundaries.	Names of villages included in jurisdiction.
Dhanaha outpost ..	The outpost jurisdiction is bounded on the east by Thakraha, Nawtan Bhagwanpore, Sirinagar, Kharkhatwa; on the west by Kuwari, Gabarahia, Majharia, Nainha, Jarnaili, Bharpatia, Rakhahi, Piprasi, Sugawli, Khichriahwa, Muradih, Gharahwa, Debipore, Dahwa; on the north by Puraina Lakra, Madarhi, Jhakhwanhi, Kanapyapur, Karahia basauli, Semarbari, Pakhnaha, Bhararwa, Urdahi Chinrahi, Sisai Lathiahwa, Sahgi Barwa, Balooa, Kathahwa Sigahwa, Sauraha, Piprasi, Rakhahi, Jarnaili Motalke Semra, Semra, Kerwania Motalke Semra, Nagahi; and on the south by Kathar, Barwa Gobardhanapur, Ghusri, Siswa, Rupahi, Binahi, Jamunia, Jhawatia, Dihi, Machhaha, Hira Soti, Bhuidharwa, Sonbarisa birt, Ohir Chirwa, Harpore Munjawna, Dhumnagar, Bhatahwa, Belwaripatti, Keirpatti, Bhualpatti, Malahitola, Umantola, Nawtan.	(1) Semra, (2) Semra (Bishunpore), (3) Semra Labedaha tola Piprasi, (4) Semra Labedaha Sauraha, (5) Semra Labedahatola Katahwa, (6) Balooa, (7) Dumri, (8) Madhubani, (9) Taulaha, (10) Taulaha (arazirakbe Taulaha Pakrialwa), (11) Dawanaha, (12) Kataha (Dawan Kataha), (13) Bajar Keraiya, (14) Tamakuha, (15) Kathar, (16) Barwa, (17) Khairwa, (18) Rampore, (19) Dhanaha Pakhanha, (20) Bakwa Sah, (21) Mathia, (22) Kolhua, (23) Kudaria *alias* Kundia, (24) Binawalia, (25) Pandari, (26) Tola Musa Khan, (27) Bhuidharwa, (28) Urdahi, (29) Cheorahya, (30) Kowahia *alias* Rawahia, (31) Narharwa, (32) Ghurahi *alias* Ghurahwa, (33) Sisai *alias* Sirsi Baisatwa, (34) Sahgi Barwa *alias* Barwasahgi, (35) Baldiha, (36) Mahuawa, (37) Sakraulia, (38) Mathia Khurd, (39) Khairwa Tola Biran, (40) Musahri, (41) Parsauna, (42) Pakaha, (43) Mujhor *alias* Bhowdharwa, (44) Rampurwa *alias* Nainha, (45) Karahia Basauli, (46) Semarbari *alias* Kotraha, (47) Manpur Surki and Garbi, (48) Kandhaiyapur, (49) Paremhi, (50) Chandrahia, Barahia, (51) Barhara birt, (52) Barhara Muradih, (53) Salah Bairia *alias* Senduaria, (54) Chilwania *alias* Nilwania, (55) Bhitaha, (56) Dubaha *alias* Machhahia Debi Pakri, (57) Dubaha Machhaha, (58) Chandarpur, (59) Bhuidharwa, (60) Sanbarisa, (61) Baria *alias* Jhakwanahi, (62) Bheriharwa (Madarhi), (63) Puraina, (64) Mirjitwa, (65) Lediharwa, (66) Bisrampore, (67) Piparpanti, (68) Hariharpore, (69) Gardahia, (70) Bharthapatti, (71) Harpore, (72) Ramnagar Kharkhata, (73) Mednipore *alias* Kursaha, (74) Dhumnagar, (75) Amwa Bairia *alias* Thakraha, (76) Amwa Bairia *alias* Thakraha, (77) Amwa Bairia *alias* Thakraha, (78) Thakraha, (79) Sirinagar, (80) Bhagwanpore, (81) Nawtan Gurwalia.
Jagapatti outpost ...	The outpost jurisdiction is bounded on the north by Bariarpur, Sangrampur, Amaithia, Jamoonia, Dhangarhwatola Gobindapur, Gora; on the east by Bahoearwa, Patkhowli, Misrauli, Malahia Rosscolpur, Pt 2, Pipra Nawrangia; on the south by Kohra, Dhabiadih, Lachimpur, Mangalpur, Siswania *alias* Siswa, Bidhatapur, Baisia; and on the west by Khutwania, Dhabelwa. Kawlapur, Balooa Newaz, Parayagwa.	(1) Dhangarhwa, (2) Dhondhwalia, (3) Siswania, (4) Shihpati, (5) Chhatianwa, (6) Lachanpura, (7) Kuarapatti, Laobhnawta Birt, (8) Belbanwa, (9) Rudalpur, (10) Puraina, (11) Dularpatti, (12) Bansopatti, (13) Gora, (14) Bahuarwa, (15) Mathia Rascolpur, (16) Patkhowli, (17) Misrawli, Rampur Bahelia, (18) Lachmipur, (19) Rudarpur, Khap-Bagnahia dih, (20) Bagachi, (21) Babhatwa-Malahia Rascolpur, (22) Manopatti, (23) Pipra Nowrangia, (24) Kohra, (25) Jagdumapur, (26) Dumri, (27) Barbarwa, (28) Bhawanipur, (29) Mangalpur, (30) (31) Dhabia Dih, (32) Lachmipur, (33) Siswa, (34) Prayagwa, (35) Rampoorwa, (36) Balooadeo, (37) Balooa, (38) Balooatola Murat Rai, (39) Balooa Newaz, (40) Kawlapur, (41) Bhatwalia, (42) Dhabelwa, (43) Khutwania, (44) Dihi, (45) Gajna, (46) Baisia, (47) Bidhatapur *alias* Mandhatapur, (48) Baisiatha Khap, (49) Bariarpur, (50) Bisrampur, (51) Barbalia, (52) Matkotha, (53) Nawgawa, (54) Lawkaria, (55) Nankar, 56) Koirgawa, (57) Hathia Bhaisi, (58) Bhatwalia, (59) Chowmukha, (60) Dhangarhwa Tola Madarpur, (61) Hathia, (62) Fatehpur, (63) Sangrampur, (64) Amaithia, (65) Jamunia, (66)) Dhangarhwa Tola Gobindpur, (67) Mangalpur *alias* Machhargawa.

H. W. C. CARNDUFF,
Offg. Secy. to the Govt. of Bengal.

No. 507J.D.—The 22nd April 1905.—Under section 3, Act I (B.C.) of 1876 (an Act to provide for the voluntary registration of Muhammadan marriages and divorces), the Lieutenant-Governor has been pleased to grant a license to Maulvi Kalimuddin Khan, authorizing him to register Muhammadan marriages and divorces, and to exercise the other functions of a Muhammadan Registrar within the police-stations of Balasore, Basta and Soro, in the district of Balasore.

Balasore.

No. 508J.D.—The 22nd April 1905.—Under section 2, Act XII of 1880 (an Act for the appointment of persons to the office of Kazi), the Lieutenant-Governor has been pleased to grant a sanad (license) to Maulvi Kalimuddin Khan, appointing him Kazi of thanas Balasore, Basta and Soro, in the district of Balasore, for the celebration of marriages and the performance of other rites and ceremonies, when application is made to him to perform any such functions.

Balasore.

No. 563J.D.—The 24th April 1905.—Under section 3, Act I (B.C.) of 1876 (an Act to provide for the voluntary registration of Muhammadan marriages and divorces), the Lieutenant-Governor has been pleased to grant a license to Maulvi Walayet Hossain, authorizing him to register Muhammadan marriages and divorces, and to exercise the other functions of a Muhammadan Registrar within thanas Tamar, Silli, Khunti, and outposts Bundu, Rahey and Torpa, in the district of Ranchi.

Ranchi.

No. 564J.D.—The 24th April 1905.—Under section 2, Act XII of 1880 (an Act for the appointment of persons to the office of Kazi), the Lieutenant-Governor has been pleased to grant a sanad (license) to Maulvi Walayet Hossain, appointing him Kazi of thanas Tamar, Silli, Khunti, and outposts Bundu, Rahey and Torpa, in the district of Ranchi, for the celebration of marriages and the performance of other rites and ceremonies, when application is made to him to perform any such functions.

Ranchi.

H. W. C. CARNDUFF,
Offg. Secy. to the Govt. of Bengal.

NOTIFICATION.

No. 416J.D.—The 17th April 1905.—In exercise of the power vested in him by section 14, sub-section (1) of the Code of Criminal Procedure, 1898, the Lieutenant-Governor is pleased to confer upon each of the undermentioned Presidents of panchayats in the district of Rajshahi the powers of a Magistrate under sections 64, 127 and 128 of the same Code, and to declare that the said powers may be exercised by the said officers within the limits of the Unions noted against their respective names.

Rajshahi.

2. The Lieutenant-Governor is further pleased to declare, in pursuance of sub-section (2) of the said section 14, that the said powers are conferred and may be exercised by each of the said officers for a period of three years only from the date of this notification:—

Nator thana.

Name of President.		Name of Union.	
Babu Sarat Chandra Moitra	...	No.	I
,, Bhupendra Chandra Roy	...	,,	II
,, Kali Nath Shaha	...	,,	III
,, Shibendra Bhattacharji	...	,,	IV
,, Sarat Chandra Bhattacharji	...	,,	V
,, Kali Kamal Moitra	...	,,	VI
,, Gokul Gobinda Chaudhuri	...	,,	VII
,, Deb Nath Mozumdar	...	,,	VIII
,, Trailokya Nath Shaha	...	,,	IX
,, Mon Mohan Mozumdar	...	,,	X
,, Pramath Nath Roy	...	,,	XI
,, Brindaban Chandra Misra	...	,,	XII
,, Suresh Chandra Sanyal	...	,,	XIII
,, Kedar Nath Moitra	...	,,	XIV
,, Kripa Nath Moitra	...	,,	XVI
,, Trailakhya Nath Chaki	...	,,	XVII

R. W. CARLYLE,
Offg. Chief Secy. to the Govt. of Bengal.

NOTIFICATION.

No. 528J.D.—The 22nd April 1905.—In exercise of the power vested in him by section 14, sub-section (1) of the Code of Criminal Procedure, 1898, the Lieutenant-Governor is pleased to confer upon each of the undermentioned Presidents of panchayats in the district of Dacca the powers of a Magistrate under sections 64, 127, and 128 of the same Code, and to declare that the said powers may be exercised by the said officers within the limits of the Unions noted against their respective names.

Dacca.

2. The Lieutenant-Governor is further pleased to declare, in pursuance of sub-section (2) of the said section 14, that the said powers are conferred and may be exercised by each of the said officers for a period of three years only from the date of this notification.

Nawabganj Thana.

Name of President.	Name of Union.
Babu Harish Chandra Ghosal	Matabpur.
Manik Meah	Muksudpur.
Babu Purna Chandra Siramoni	Narisa.
„ Sasanka Mohon Bose	Joypara.
„ Mohim Chandra Ray	Jhonki.
„ Bhuban Mohon Ray	Kutarpara.
„ Chandra Kumar Mozumdar	Debinagar.
„ Utpalananda Bose	Kholeara.
„ Denenath Sanyal	Puralia.
„ Rai Mohon Mozumdar	Kusumhati.
„ Pyari Mohon Mukherji	Mahammadpur.
„ Chiranjib Prosad Bose	Churain.
„ Mohesh Chandra Chattopadhya	Galimpur.
Dula Meah *alias* Mir Mukramali	Agla
Mahamed Abdul Rab	Burrah.
Babu Rash Behari Sen	Bukshanagar.
„ Abhoy Charan Ghose	Sholla
Munshi Mahamed Shamsal Haq Khan	Jantrail.
Babu Jogendra Narain Ray	Nawabganj.
„ Radha Ballav Guha	Nayansree
„ Bepin Behari Sarkar	Kowniakandi.
Sukhai Rosario *alias* Vincent Rosario	Bandura.
Syad Oliullah	Shikaripara.

Sabhar Police-station.

Babu Rakhal Chandra Datta ...	Sabhar.
„ Rajendra Mohan Roy, M.A.	Rowile
„ Uma Nath Sen	Bhadalia.
„ Bilash Chandra Ganguly	Baradail.
„ Srish Chandra Roy Moulik	Dhamrai.
„ Gobinda Chandra Basak	Nayanagar.
„ Tarini Prosad Roy	Jaypura.
„ Hem Chandra Choudhury	Haraiya.
„ Rajendra Kishore Roy	Kaisty.
„ Kali Kishore Bhattacharjee	Shoaldhan.
Ratan Miah Khandakar	Noagaon.
Babu Dwarka Nath Sarkar Kaviraj	Baishakanda.
„ Bhagawan Chandra Sanyal ...	Shimolea.
„ Chuni Lal Roy	Dhamsona.
Mohar Bepari	Pathalia.
Babu Ram Narayan Bangshi	Baidgao.
„ Sarada Prosad Roy Choudhury	Kashimpur.
„ Kali Narayan Sarkar	Tajpur.
„ Ram Manikya Das	Rostompur.
„ Brajo Bashi Das	Berolia
„ Ganga Ram Shaha	Bongao
Mahammad Ainuddin Khan *alias* Bacha Mean ...	Kaondeea.
Useer Ameen	Salepur.
Babu Krishna Kumar Adhikary	Bhakurta.
„ Purna Chandra Roy	Tetuljhora.
Tamis Sarkar	Foolbaria.
Babu Mahendra Kanta Barua Sarmah	Boalia.
Elim Mollah	Kot berea
Amar Khan	Chowkut.

Sabhar Police-station—concld.

Name of President.	Name of Union.
Babu Bhola Nath Shaha... ...	... Chapair.
„ Krishna Prosad Banikya ...	... Sutrapur.
„ Sarat Chandra Chakraborty ...	... Dhaljora.
„ Gangadhar Chakraborty ...	... Jadabpur.
Maulvi Abdur Rahman ...	... Paragaon.
Babu Chakradhar Shaha ...	... Nandeshari.
Maulvi Maslauddin Choudhury ...	... Srifaltali.
Babu Abani Mohan Biswas ...	... Atabo.
„ Ram Das Bangshi ...	... Chandara.
„ Annada Prosad Chanda ...	... Laskar Chala.

Kapasia Thana.

Babu Guru Dayal Karmakar ...	... Kapasia.
Taher Ali Akan	... Gosinga.
Mahamed Manir Meah	... Targao.
Shek Hamid	... Karihata.
Babu Ananda Chandra Barman ...	... Singar Dighi.
Ali Mahamed	... Singari.
Babu Adi Nath Chakraborty	... Barishaba.
„ Rajani Kant Bhowmik ...	... Aralia.
Abdul Gani	... Ghagotia.
Bali Mahmud Faqir	... Sanmania.
Babu Bhuban Mohan Basya ...	... Rajabari.

Rupganj Thana.

Babu Protap Chandra Sen	... Pachdona.
„ Brojabasi Rakhit	... Kahetpara.
„ Mohonta Chandra De ...	... Danga.
„ Hiranya Kumar Sen ...	... Amdia.
„ Tarak Chandra Dutt ...	... Satgao.
„ Asvini Kumar Chatterji ...	... Murapara.
„ Rajendra Kumar Chakravarti ...	... Rupganj.

Narsindi Outpost.

Babu Kali Mohan Das Gupta ...	... Narsindi.
Maulvi Jamsher Ali ...	... Kalapaharia.
Babu Mohini Mohan Rai ...	... Chinishpur.
Maulvi Alahi Baksh ...	... Khaganda.
Babu Radha Nath Bhuinya ...	... Sadasadi.
Warish Sarkar	... Bishnandi.
Babu Ram Chandra Bhattacharji ...	... Nekjanpur.
Kaji Hadayet Ulla	... Mahishasura.
Babu Harendra Nath Chakravarty ...	... Paikar Char.
„ Jagabandhu Saha ...	... Silmandi.

Raipura Thana.

Babu Rajkumar Chaudhury ...	... Raipura.
„ Mohim Chandra Chaudhury ..	... Hashimpur.
Ashraf Ali Khan	... Masimpur.
Babu Jagat Bandhu Saha	... Sadhar Char.
„ Sitanath Roy	... Jushar.
„ Syama Charan Chakravarty ...	... Baghaba.
„ Kali Kumar Sen	... Chakradha.
„ Bhairab Chandra Saha ...	... Narainpur.
„ Narendra Nath Roy	... Shollabaj.
„ Mahesh Chandra Nath Bepari ...	... Fuldi.
„ Kalikesore Roy	... Joymangal.
„ Nabin Chandra Paul ...	... Srerampur.
Abdul Karim Sarker	... Maheshpur.
Maulvi Golam Moula	... Radhanagar.
Nizamuddin Munshi — ...	... Srinagar.
Kalimuddin Munshi	... Paratali.
Kalu Gazi Sarker	... Bashgari.
Baduli Sarker	... Amirabad.
Salim Sarker	... Birkandi.
Babu Mohim Chandra Chanda ...	... Putia Kemargao.
„ Gagan Chandra Saha ...	... Amirganj.
„ Ramsundar Paul	... Rahimabad.

Srinagar Police-station.

Name of President.	Name of Union.
Babu Kali Nath Bose	... Srinagar.
„ Chandra Kanta Mitra ...	... Shyamsidhi.
„ Mano Ranjan Roy	... Majpara.
„ Satish Chandra Bose	... Rarikhal.
„ Dwarka Nath Chakraborty ...	... Bagra.
„ Jogendra Nath Roy Choudhury ...	.. Bhagyakul.
„ Bhabaranjan Banerjee Chowdhuri	... Medini Mandal.
„ Chandra Kumar Guha ...	... Kumar Bhog.
„ Chandra Benode Pal Choudhury ...	... Brahmangaon.
„ Devendra Lal Pal Choudhury ...	... Aikadhal.
„ Durga Prosad Datta ...	... Dualli.
„ Kunja Behari Banerjee ...	... Gaodia.
„ Mana Mohan Choudhury ...	... Khidirpara.
„ Mohesh Chandra Chakraborty ...	... Maidhapara.
„ Kishori Mohan Basu ...	... Malkhanagor.
Munshi Pir Mahamed	... Bairagadi.
Pandit Heramba Nath Nayaratna ...	... Bashail.
Babu Basanta Kumar Chattatee ...	... Kuchiamora Soalpur.
„ Raj Kumar Paul	... Chitolkot.
„ Lal Mohan Sarkar	... Baromkhali.
„ Dina Bandhu Pait	... Shekhornagar.
„ Upendra Nath Sen	... Hashara.
„ Akhoy Kumar Choudhury ...	... Solaghar.
„ Ganga Prosad Sen	... Atpara.
„ Tarak Chandra Ganguly ...	... Patabhog.
„ Shoshi Bhusan Hazra ...	... Kolapara.
„ Lalit Mohan Chatterjee ...	... Haldia.
„ Srinath Chatterjee	... Kanakshar.
„ Surja Kumar Datta	... Teotia.
„ Anukul Chandra Ganguly ...	... Bejgaon.
„ Rohini Kumar Datta... ...	... Jainshar.
Munshi Solimuddin Ahmed ...	... Boultoli.
Babu Jamini Kanta Banerjee Choudhury	... Ichapura.
„ Rohini Kumar Bose	... Roshania.
„ Hari Mohan *alias* Mohim Chandra Ghosh	... Rajahnagor.
„ Ram Chandra Majumdar ...	... Birtara.
„ Ananda Behari Mukherjee ...	... Kola.
„ Rajani Kumar Ganguly ...	... Tantar.
„ Kali Prosad Chakraborty ...	... Kukutia.

Manikganj Police-station.

Babu Gazendra Lal Shaha ...	... Bhararia.
„ Hari Mohan Ghosh	... Hatipara.
„ Girish Chandra Mitra ...	... Chandair.
„ Sadyashib Sarkar	... Dhalla.
„ Rajani Kanta Rauth	... Refathpur.
„ Girish Chandra Das	... Bariara.
„ Shib Chandra Laskar ...	... Saharail.
„ Kamini Mohan Dutt ...	... Singair.
„ Guru Charan Ghosh	... Krishnapura.
„ Rasamoy Biswas	... Joymantap.
„ Tarak Nath Sen	... Beutha.
Abdul Majid Khan	... Jamsha.
Babu Kali Mohan Shaha Mandal ...	... Daragram.
„ Durga Mohan Bandopadhya ...	... Haripara, Bishnupur.
Abdul Sattar Khan Majlish ...	... Sonka.
Babu Saroda Kumar Roy	... Tilli.
„ Mon Mohan Roy	... Hargas.
Munshi Rahamtullah	... Kureekahanca.
Babu Tripura Nath Chakraborty ...	... Dhalla.
Nural Islam Khan	... Parul.
Babu Dina Nath Sen	... Baldhara.
„ Durgananda Chakraborty ...	... Baira.
„ Harendra Kumar Bose ...	... Basur, Buruna.
„ Madhu Sudan Roy	... Gazi Navagram.
„ Sarat Chandra Roy Choudhury ...	... Baliati.

Sealo Police-station.

Name of President.	Name of Union.
Babu Bejoy Gobinda Guha	Baniajuri.
,, Hara Saukar Chakraborty	Kushonda.
,, Jagadish Chandra Goswami	Shivalya.
Munshi Khaliluddin Ahamad	Ilachipur.
Babu Purna Chandra Bagchi	Araibari.
Maulvi Rakibuddin	Baulikandi.
,, Mehdi Billah	Ulail.
Babu Chandra Kishore Roy	Simulya.
,, Iswan Chandra Sen	Nali.
,, Bhuban Mohan Das	Mauhail.
,, Kailash Chandra Neogi	Dhulandi.
,, Satish Chandra Mukherjee	Mahadebpur.
,, Shyama Ranjan Majumdar	Uthali.
,, Purnananda Roy	Baratya.
,, Raj Mohan Roy	Narchi.
,, Hari Mohan Choudhury	Khalshi.
,, Gaya Nath Mitra	Jiyanpur.
,, Kunja Behari Bose	Bachamara.
,, Mohini Kanta Shaha	Poyla.
,, Charu Sankar Roy	Teota.

Geor Outpost.

Babu Guru Charan Kar	Gheor.
,, Dwarika Nath Chanda	Poyla.
,, Bhawani Charan Sen	Bangalla.
,, Basanta Kumar Chakraborty	Kakua.
,, Giriza Kanta Majumdar	Tepri.
,, Purna Chandra Ghose	Char Mastul.

Harirampur Police-station.

Taherali Kazi	Lesraganj.
Babu Tarini Charan Roy	Hemrajpur.
,, Baroda Kanta Mukhopadhya	Boyrah
,, Jamini Kantha Ghose	Danisthapur.
,, Rajoni Nath Roy	Laksmikul.
,, Akhoy Kumar Ghose	Azimnagor.
,, Lal Mohan Bandopadhya	Sutalari.
,, Suresh Chandra Roy	Kamalapur.
,, Dinanath Roy Chowdhury	Harakandi.
,, Banarilal Shaha	Sultanpur.
,, Purna Chandra Bose	Latakhola.
,, Manu Lal Singha Roy	Baliyakandee.
,, Harendra Narain Chaudhury	Kanchanpur.
,, Ramesh Chandra Roy	Maluchi.
,, Indu Bhusan Roy	Balla.
,, Haran Chandra Chakraborty	Gopinathpur.
,, Godadhar Sarkar	Gala.
Maulvi Imdad Ali Khan	Ramkrishnapur.
Babu Durga Charan Biswas	Chala.
,, Harendra Nath Chaudhury	Diyabari.

R. W. CARLYLE,
Offg. Chief Secy. to the Govt. of Bengal.

PUBLIC WORKS DEPARTMENT.

The 25th April 1905.

No. 99.—The following notification, issued by the Government of India in the Department of Revenue and Agriculture (Civil Works), is republished for information :—

No. 108, dated the 18th April 1905.—The services of Mr. W B. Gwyther, Superintending Engineer, 3rd class, Bengal, are placed temporarily at the disposal of the Department of Commerce and Industry.

M. J. SCOBIE,
Secretary.

SUBORDINATE CIVIL SERVICE.

No. 2829A.

No. 304A.D.—The 22nd April 1905.—Babu Uma Charan Roy Chowdhry, Sub-Deputy Collector, Jangipur, Murshidabad, is allowed leave for one month, under article 260 of the Civil Service Regulations, with effect from the date on which he may avail himself of it.

Murshidabad.

No. 317A.D.—The 22nd April 1905.—Maulvi Abu Ahmed Abdul Basit, M.A., is appointed substantively *pro tempore* to the fifth grade of Sub-Deputy Collectors and is posted to the Dacca Division.

Dacca Division.

He is vested with the powers of a Magistrate of the third class.

No. 321A.D.—The 22nd April 1905.—Babu Bhuban Mohan Chatterji, Sub-Deputy Collector, Dacca Division, is posted to the head-quarters station of the Faridpur district.

Faridpur.

R. W. CARLYLE,
Offg. Chief Secy. to the Govt. of Bengal.

CIVIL MEDICAL DEPARTMENT, BENGAL.

No. 145D., dated Darjeeling, the 19th April 1905.—First grade Assistant Surgeon Mohendra Nath Dutt is appointed to do supernumerary duty at the Medical College Hospital, Calcutta, until further orders, with effect from the forenoon of the 11th April 1905.

S. H. BROWNE, M.D., COL., I.M.S.,
Inspector-General of Civil Hospitals, Bengal.

TREASURY NOTICES.

UNCOVENANTED DEPUTY COLLECTOR MAULVI ABU NASR MAHAMAD ALI held charge of the Rajshahi Treasury from the 7th October 1904 to the 27th February 1905, and was authorised to draw bills on other Treasuries.

C. R. MARINDIN, *Commissioner.*

COMMR.'S OFFICE, RAJSHAHI DIVN., JALPAIGURI, *the 9th April 1905.*

UNCOVENANTED DEPUTY COLLECTOR BABU HARA CHANDRA GHOSE has been placed in charge of the Rajshahi Treasury from the 28th February 1905, and authorised to draw bills on other Treasuries.

C. R. MARINDIN, *Commissioner.*

COMMR.'S OFFICE, RAJSHAHI DIVN., JALPAIGURI, *the 9th April 1905.*

Sheriff's Office, the 15th March 1905.

NOTICE is hereby given that the Second Criminal Sessions of the year 1905 of the High Court of Judicature at Fort William in Bengal, for the Town of Calcutta and Factory of Fort William, and the places subordinate thereto, will be held at the Court-house, in the Town of Calcutta, on Wednesday, the third day of May next, at 11 o'clock in the forenoon, and thenceforward from day to day until the said Sessions be over. And it is hereby proclaimed that all persons who are to prosecute any of the prisoners to be brought up for trial at the said Sessions be present then and there to prosecute.

E. CABLE, *Sheriff.*

শরিফ আফিস, সন ১৯০৫ সাল তারিখ ১৫ই মার্চ।

সকলকে সমাচার দেওয়া যাইতেছে যে যবে বাজালার কোর্ট উইলিয়ম দুর্গের অধীন সহর কলিকাতার ও অন্যান্য স্থানের ফৌজদারী বিচার নিষ্পত্তি জন্য আগামী সন ১৯০৫ সালের মে মাসের বুধবার বেলা ১১ ঘটিকার সময় এবং যে পর্য্যন্ত সেশিয়ানের কার্য্য শেষ না হয় প্রতিদিন উক্ত সময়ে কলিকাতায় হাইকোর্টের আপন আদালত ঘরে সন ১৯০৫ সালের দ্বিতীয় ক্রিমিনেল সেশিয়ান বসিবেক এবং এতদ্বারা প্রচার করা যাইতেছে যে, যে সকল ব্যক্তি কোন কয়েদির বিরুদ্ধে ফৌজদারী মিছিল করিবেক তাহারা উক্ত স্থানে উক্ত সময়ে হাজির থাকিয়া মোকদ্দমা করে ইতি।

ই: কেবল, শরিফ।

EDUCATION DEPARTMENT, BENGAL.

Subordinate Educational Service.

The 19th April 1905.—Babu Gurubandhu Bhattacherji, B.A., Assistant Head Master, Chittagong Collegiate School (Class VIII), is allowed leave of absence for one month under article 271 of the Civil Service Regulations, with effect from the 27th March 1905 or any subsequent date on which he may have availed himself of it.

Babu Mathura Kanta Nandi, M.A., an Assistant Master in the Chittagong Collegiate School (substantively *pro tempore* in Class VIII), is appointed to act as Assistant Head Master, Chittagong Collegiate School, during the absence, on leave, of Babu Gurubandhu Bhattacherji, or until further orders.

The 20th April 1905.—Maulvi Elah Nowag Khan, B.A., Assistant Head Master, Malda Zilla School (substantively *pro tempore* in Class VIII), was absent on leave up to the 12th March 1905, under article 339 of the Civil Service Regulations, in continuation of that granted under the orders of the 13th January 1905.

Pending the arrival of Babu Bireswar Das, Babu Tarakeshwar Bhattacherji, M.A., Sadar Sub-Inspector of Schools, Malda, is appointed with the consent of the District Board to act as Assistant Head Master, Malda Zilla School, and in Class VIII of the Subordinate Educational Service, with effect from the 8th April 1905, *vice* Maulvi Elah Nowag Khan, resigned.

A. PEDLER,
Director of Public Instruction, Bengal.

DACCA SCHOOL OF ENGINEERING.

1. Candidates for admission into the Overseer Branch of the Dacca School of Engineering are to submit their applications to the Principal, Dacca College, through their *bonâ fide* guardians on or before the 27th May next.
2. Candidates for admission must have passed the University Entrance Examination or standard VII of the Code for European Schools.
3. The selected candidates are to join on the second Monday in June.
4. The following particulars must be stated in the application :—

   (*a*) Name, address and occupation of father or guardian.
   (*b*) Race and Religion
   (*c*) Age of the candidate.

5. Each candidate must produce a medical certificate of good and sound health from an Assistant Surgeon at the time of admission and a certificate of good moral character from the Head of the institution from which he comes.

DACCA COLLEGE,
The 17th April 1905.

COLIN H. BROWNING, M.A.,
Principal.

NOTIFICATION.

IN supersession of the notification of the 29th March 1905, it is hereby notified for general information that the first half-yearly Departmental Examination of Assistant and Deputy Magistrates and Sub-Deputy Collectors of regulation and non-regulation districts, of Cantonment Magistrates and of the officers employed in the Police, Forest and Public Works Departments in the districts of Patna and Bhagalpur Divisions, will be held at Bankipore in the Bihar School of Engineering on Tuesday, the 25th April 1905, and the two following days, and not in the Patna College Hall as previously notified

The examination will begin at 11 A.M. on each day.

C. R. MARRIOTT, *Addl. Commissioner.*

PATNA COMMR.'S OFFICE, BANKIPORE, *the 17th April 1905.*

VERNACULAR MASTERSHIP EXAMINATION, 1905.

Presidency, Burdwan, Dacca, Chittagong, and Rajshahi Divisions.

THE undermentioned candidates have passed the Examination:—

FIRST GRADE.

High.

(In order of merit.)

No.	NAME	Age.	Training School.	
1	Subal Chandra De* ...	24-0	Chittagong Training School.	
2-3	Pitambar Nath* ...	19-0	Dacca	ditto.
	Bamandas Banerji* ...	19-0	Calcutta	ditto.
4	Mukunda Chandra Raiz ...	18-0	Do.	ditto.
5	Nibaran Chandra Sanyal ...	14-7	Rangpur	ditto.
6	Janaki Nath Hati ...	20-0	Calcutta	ditto.
7-8	Surendra Kumar Das* ...	16-0	Dacca	ditto.
	Duryodhan Barua ...	21-6	Chittagong	ditto
9	Baranasi Bhattacharjya* ...	17-5	Hooghly	ditto.
10	Phelaram Banerji ...	16-8	Do.	ditto.
11	Giris Chandra Pal ...	20-0	Chittagong	ditto.
12	Nibaran Chandra Pal ...	18-5	Hooghly	ditto.
13	Sarvadas Acharya* ...	16-5	Do.	ditto.
14	Chandi Charan Ta ...	17-0	Calcutta	ditto.
15	Makhan Lal Das ...	17-5	Rangpur	ditto.
16	Jatindra Nath Ray Chaudhuri.	18-0	Calcutta	ditto.
17	Chinta Mani Panda ...	16-0	Do	ditto.
18	Ras Bihari Ray* ..	14-0	Dacca	ditto
19	Mukunda Chandra Gautam	18-0	Hooghly	ditto
20	Sripati Mohan Banerji ...	17-5	Do	ditto.
21	Mahendra Nath Das ...	19-8	Rangpur	ditto.
22	Mahendra Lal Nandi*† ...	20-0	Chittagong	ditto.
23	Ramapati Mukherji ...	21-8	Hooghly	ditto.
24	Satis Chandra Purkait ...	18-0	Calcutta	ditto.
25	Charu Chandra Samanta ...	19-0	Hooghly	ditto
26	Padmanabha Das ..	19-5	Do.	ditto.
27	Raksha Hari Das ...	17-3	Do.	ditto.
28	Bijan Bihari Chatterji ...	17-8	Do.	ditto.
29	Hara Chandra De ...	17-0	Dacca	ditto.
30	Ras Bihari Banerji ...	17-8	Hooghly	ditto.

Medium.

1	Nilmani Mahana ...	16-8	Hooghly Training School.	
2	Bhola Nath Ray ...	16-8	Do.	ditto
3	Radha Govinda Acharya ...	20-8	Do.	ditto.
4	Guru Prasad Majumdar ...	19-0	Chittagong	ditto.
5	Bipin Chandra Nag ...	20-0	Do.	ditto.
6	Haripada Mandal ...	18-0	Calcutta	ditto.
7	Narendra Nath Rai ...	19-0	Hooghly	ditto.
8	Hrishikes Misra ...	16-6	Do.	ditto.
9	Purna Chandra Chakravarti	22-0	Calcutta	ditto.
10	Radha Syam Barma ...	21-0	Do.	ditto.
11	Manmatha Nath Acharya	20-0	Hooghly	ditto.
12	Pramatha Nath Mitra ...	18 0	Calcutta	ditto.
13	Kalipada Mukherji ...	18-8	Hooghly	ditto.
14	Sita Nath Haldar ...	21-0	Calcutta	ditto.
15	Krishna Sinkar Das* ...	19-5	Hooghly	ditto.
16	Srinandan Das ...	18-5	Do.	ditto.
17	Bipin Bihari Sarkar ..	20-0	Dacca	ditto.
18	Mahes Chandra Nandi* ...	21-0	Do.	ditto.
19	Ayin Uddin Pramanik ...	16-9	Rangpur	ditto.
20	Rajani Kumar Nath† ...	17-6	Chittagong	ditto.
21	Abdul Jabbar Mandal ...	16-8	Rangpur	ditto.

* Entitled to special certificates in Drawing and Practical Geometry.
† Candidates other than those whose names are marked with dagger have passed in Manual work.

Medium—concld.

No.	Name.	Age.	Training School.
22	Gaurpada Chaudhuri* ...	18-0	Hooghly Training School.
23	Rampada Chaudhuri ...	17-5	Do. ditto.
24	Jatindra Mohan Mukherji	19-8	Do. ditto.
25	Jatindra Nath Pal ...	18-0	Calcutta ditto.
26	Khezar Uddin Sarkar ...	17-3	Rangpur ditto.
27	Kamdev Maiti ...	20-0	Calcutta ditto.
28	Mahes Chandra De ...	18-0	Dacca ditto.
29	Kader Bux Biswas ...	23-8	Rangpur ditto.
30	Bhaba Narayan Sardar ...	19-0	Calcutta ditto.
31	Bhut Nath Maiti ...	18-0	Do. ditto.
32	Jatindra Nath Samanta ...	18-0	Hooghly ditto.
33	Aswini Kumar Chakravarti (I).	15-0	Dacca ditto.
34	Abdul Majid Mandal ...	17 8	Rangpur ditto.
35	Bhushan Chandra Ghosh	19-8	Hooghly ditto.
36	Surya Kumar Chatterji ...	18-0	Calcutta ditto.
37	Chandra Mohan Mandal ...	17-0	Do. ditto.
38	Priya Nath Khatua ...	18-5	Hooghly ditto.
39	Ratanlal Mandal ...	20-0	Krishnagar ditto.
40	Moyezuddin Mandal* ...	19-6	Rangpur ditto.
41	Jatindra Mohan Bhattacharya.†	25-0	Private (Hooghly).
42	Sarat Chandra Sarkar ...	16-8	Hooghly Training School.
43	Bibhuti Bhushan Haldar ...	26-0	Calcutta ditto.
44 to 46	Probodh Kumar Mullik ...	20-0	Krishnagar ditto.
	Masiruddin Khan ...	21-9	Rangpur ditto.
	Ramdas Sarkar ...	19-9	Do. ditto.
47	Bhupendra Nath Misra ...	17-0	Calcutta ditto.
48	Faratulla Muhammad	17-8	Rangpur ditto.
49	Khudiram Ray ...	18-8	Hooghly ditto.
50	Kshirod Kumar Maiti	21-0	Calcutta ditto.
51	Param Chandra Pal ...	16 0	Dacca ditto.
52	Syama Charan Bhattacharya†.	20-0	Chittagong ditto.
53	Sita Nath Saha ...	23-0	Private (Dacca).
54	Bhuban Chandra Maiti ...	21-0	Calcutta Training School.
55	Sajani Kanta Das ...	18-8	Hooghly ditto.
56	Aswini Kumar Das ...	19-0	Dacca ditto.
57	Dharanidhar Karmakar ...	17-9	Calcutta ditto.
58	Sripati Charan Chaudhuri ...	17-0	Do. ditto.
59	Akhil Chandra Haldar ...	19-0	Dacca ditto.
60	Bhupati Bhushan Samanta	17-8	Hooghly ditto.
61	Abdul Jalil Afrad .	16-0	Dacca ditto.
62	Asutosh Chaudhuri† ...	18-0	Chittagong ditto.
63	Sarada Charan Ray ...	20-0	Calcutta ditto.
64	Rajmohan Pal ...	18-0	Dacca ditto.
65	Damodar Mukherji ...	18-8	Hooghly ditto.
66	Kshetra Nath Banerji ...	18-5	Calcutta ditto.

Low.

1	Srimantalal Das	19-5	Hooghly Training School.
2	Prasanna Kumar De* ...	16-0	Dacca ditto.
3	Kamini Ranjan Hore ...	20-0	Chittagong ditto.
4	Giris Chandra Maiti ...	22-0	Calcutta ditto.
5	Wab Mia Sikdar† ...	20-0	Chittagong ditto.
6	Ramani Kumar Chaki* ...	17-8	Rangpur ditto.
7	Kalikanta Chakravarti ...	19-0	Dacca ditto.
8	Radha Ballabh Karmakar...	18-8	Hooghly ditto.
9	Sadat Ali ..	18-0	Dacca ditto.
10	Sasadhar Mandal ...	17-0	Calcutta ditto.
11	Khosrab Uddin Biswas ...	18-0	Hooghly ditto.
12	Jugul Kisor Thakur ...	19-8	Do. ditto.
13	Bhutnath Chatterji ...	20-5	Do. ditto.

* Entitled to special certificates in Drawing and Practical Geometry.
† Candidates other than those whose names are marked with dagger have passed in Manual work.

Candidates already passed in the old Course and taking up one or more new subjects.

FIRST GRADE.

Science, Art of Teaching and Kindergarten, Drawing, Drill and Manual work.

No.	NAME.	Age.	Training School
	Raj Krishna Das		Calcutta (Private).

Art of Teaching and Kindergarten, Drawing, Drill and Manual work.

	Prasanna Coomar Mojumdar	22-0	Chittagong (Private).

Art of Teaching and Kindergarten, Drill and Manual work.

	Sarat Chandra Bhaumik ...	29-0	Chittagong (Private).
	Govinda Chandra Acharji ...	25-9	Rangpur do.
	Sudarsan Chandra Biswas ..		Hooghly do.
	Hari Prasanna Chaudhuri	31-0	Do. do.

Art of Teaching and Kindergarten, Science, Drill and Manual work.

	Aswini Kumar Nag ...	23-0	Dacca (Private).
	Ras Mohan Nath ...	35-0	Do. do.

Drawing and Practical Geometry.

	Bazler Rahman Mia ...	28-0	Rangpur (Private).
	Sarat Chandra Das . .	19-0	Calcutta do.

Drawing and Practical Geometry and Drill.

	Raj Koomar De ...	34-0	Chittagong (Private)

Science, Drill and Manual works.

	Ramani Kanta Das		Calcutta (Private)

Manual Work

	Srinath Chandra Maiti		Calcutta (Private).

SECOND GRADE.

High.

1	Sripati Bhattacharja ...	18-3	Rangpur Training School
2	Sasibhusan Das ...	17-11	Hooghly ditto.
3	Nareswar Sarma ..	21-5	Rangpur ditto.
4	Kalipada Majilsa ...	15-11	Hooghly ditto.
5	Khondker Fasle Karim ...	22-0	Dacca ditto.
6	Golam Khaibar Khondkar	15-9	Rangpur ditto.
7	Phelaram Mohanta ...	15-8	Hooghly ditto.
8	Raksha Chandra Pal ...	18-11	Do. ditto.
9	Kali Prasanna Mozoomdar	17-0	Chittagong ditto.
10	Sisupati De	18-5	Hooghly ditto.
11	Purna Chander Pandit ...	21-0	Chittagong ditto.
12	Govinda Chander Manji ...	17-0	Calcutta ditto.
13	Syama Churn Chowdhuri ...	17-0	Chittagong ditto.
14	Mahendra Nath Das ...	18-0	Calcutta ditto.
15	Monomohan Kanangoe ..	20-0	Chittagong ditto.
16	Bepin Behari Das ..	16-11	Hooghly ditto.
17	Radhika Prosad Mukerjee	15-11	Do. ditto.
18 to 20	Chintamoni Gupta ...	15-11	Do. ditto.
	Prasanna Coomar Das ...	28-9	Rangpur ditto.
	Rahimuddin Sarkar ...	16-4	Do. ditto.
21	Pratap Chandra Sarkar ...	15-5	Hooghly ditto.
22	Karim Bux	20-0	Chittagong ditto.
23	Kasi Waizuddin Ahmed ...	22-0	Do. ditto
24	Bejoy Krishna Baidya ...	20-0	Calcutta ditto.
25	Monomohan Chowdhuri ...	17-6	Chittagong ditto.
26	Sahiruddin Pramanik ...	19-9	Rangpur ditto.
27	Nisi Kanta Biswas ...	22-0	Calcutta ditto
28	Basiruddin Sarkar ...	15-3	Rangpur ditto.
29	Nagendra Nath Haldar ...	18-0	Calcutta ditto.
30	Dakshina Ranjan Chatterjee	18-11	Hooghly ditto.
31	Iswar Chandra Maiti ...	21-0	Calcutta ditto.

SECOND GRADE.—*concld.*

Medium.

No.	NAME.	Age.	Training School.
1	Kunchil Chandra Banerjee	21-0	Private (Calcutta).
2	Rasik Lal Pattak .	16-8	Dacca Training School.
3	Kalika Prasad Chackravarti	26-8	Do. ditto.
4	Rohini Kanta Sarkar ...	15-9	Rangpur ditto.
5 to 8	Bhupati Bhusan Ruj ...	17-5	Hooghly ditto.
	Tejendra Kumar Chowdhuri	18-0	Chittagong ditto.
	Jabed Ali Khan ...	14-4	Rangpur ditto.
	Gaur Mohan Nayak ..	18-0	Calcutta ditto.
9	Purna Chandra Chatterjee	17-8	Hooghly ditto.
10	Priya Nath Mandal ...	20-0	Krishnagar ditto.
11	Kalipada Sarkar ...	19-0	Calcutta ditto.
12	Jagat Chandra De ...	21-8	Dacca ditto.
13	Hrishikesh Chattoraj ...	17-11	Hooghly ditto.
14	Kashipati Panja ...	15-11	Do. ditto.
15	Badshah Mia ...	14-4	Dacca ditto.
16	Nalini Kanta Chowdhuri ...	18-0	Calcutta ditto.
17	Basaki Nath Gorai ...	16-7	Hooghly ditto.
18	Rajani Mohan Chakravarti	15-11	Rangpur ditto.
19	Mahammad Maizar Rahaman.	17-8	Hooghly ditto.
20	Girish Chandra Das .	19-0	Calcutta ditto.
21	Chandi Charan Roy ...	17-0	Do. ditto.
22 to 24	Mrittunjoy Mandal ...	19-0	Do. ditto.
	Sambhu Nath Mukerjee ...	18-0	Do. ditto.
	Gangadhar Das ...	17-2	Rangpur ditto.
25	Govinda Chandra Maiti† ...	31-0	Private (Calcutta).
26	Rajkumar Chackravarti ...	17-3	Dacca Training School.
27	Haladhar Pal ...	16-0	Dacca ditto.
28	Arjuna Chandra Das ...	17-0	Chittagong ditto.
29	Nanda Lal Roy . .	18-0	Calcutta ditto.
30	Purna Chander Banerjee	17-8	Hooghly ditto.
31 to 33	Mati Lal Kundu ..	20-8	Do. ditto.
	Rasik Chandra Bhadra ...	20-0	Calcutta ditto.
	Beni Madhab Manna ...	18-0	Do. ditto.
34	Kali Prasad Jana ...	19-0	Do. ditto.
35 to 39	Gopal Chandra Khan† ...	19-5	Hooghly ditto.
	Abdul Aziz Munsi ...	19-0	Dacca ditto.
	Dharani Dhar Boal ...	16-0	Calcutta ditto.
	Baikuntha Nath Das ...	20-0	Do. ditto.
	Rukmini Kanta Das ...	19-0	Do. ditto.
40	Abinas Chander Sinha ...	16-0	Do. ditto.
41	Sarat Chander Nandi ...	19-0	Chittagong ditto.
42	Mukunda Lal Mookerjee ...	18-0	Hooghly ditto.
43	Sahadev Chandra Das	17-3	Dacca ditto.
44 to 46	Kamini Mohan Chackravarti	13-9	Do. ditto.
	Suresh Chandra Jas (II)...	17-3	Hooghly ditto
	Rajkishore Pandit ...	17-0	Dacca ditto.
47	Charu Chandra Mukerjee ...	...	Private (Calcutta).
48	Raghu Nath Pal ...	19 0	Calcutta Training School.
49	Raj Giri Ghose ...	19-9	Rangpur ditto.
50	Rasaraj Majumdar ...	17-11	Hooghly ditto.
51	Nalinaksha Ghosh ...	17-8	Do. ditto.
52	Sheikh Gulzar Hussain ...	16-9	Rangpur ditto.
53	Gopal Kisku	17-0	Krishnagar ditto.
54	Kshudiram Acharjya ...	17-0	Calcutta ditto.
55 to 58	Gopal Chander Das † ...	19-0	Do. ditto.
	Sital Chander Pal † ...	19-0	Private (Calcutta).
	Jogendra Nath Goha ...	17-0	Calcutta Training School.
	Sherifutulla Akanda ...	18-7	Rangpur ditto.
59	Kashim Uddin Ahmed ...	15-9	Do. ditto.
60 to 62	Abhoy Churn Guha ...	19-0	Calcutta ditto.
	Gopal Chunder Mukerjee ...	18-0	Do. ditto.
	Rohini Kumar Bhaumik ...	20-0	Chittagong ditto.
63 to 65	Kala Chand Maiti ...	17-0	Calcutta ditto.
	Kamalakanta Sarkar ...	17-11	Hooghly ditto.
	Aman Ulla	14-4	Rangpur ditto.
66	Lalit Kumar De ...	19-0	Calcutta ditto.

† Candidates other than those, whose names are marked with dagger have passed in Manual work.

SECOND GRADE—*contd.*

Medium—contd.

No.	NAME.	Age.	Training School.
67	Moyenuddin Mandal ...	17-9	Rangpur Training School.
68	Guna Sindhu Naskar ...	16-0	Calcutta ditto.
69	Kamaluddin Ahmad ...	19-3	Rangpur ditto.
70	Mahammad Ebadulla ...	21-0	Dacca ditto.
71	Safat Ali Munsi ...	15-3	Rangpur ditto.
72	Lalit Mohan Chatterjee ...	16-11	Hooghly ditto.
73	Din Dayal Nandi ...	19-0	Calcutta ditto.
74	Girindra Nath Biswas ...	16-0	Krishnagar ditto.
75	Bipin Chander Saha ...	16-0	Dacca ditto.
76	Paban Chander Das ...	17-9	Rangpur ditto.
77	Dharani Dhar Maiti ...	20-0	Calcutta ditto.
to	Abul Hossein Khan ...	15-0	Dacca ditto.
79	Sayed Jharu Mia ...	18-8	Hooghly ditto.
80	Hrishikesh Bhandari ...	17-0	Calcutta ditto.
81	Bibhuti Bhusan Sarkar ...	16 11	Hooghly ditto.
82	Hem Chandra Jana ...	16-0	Calcutta ditto.
83	Abbas Ali	16-0	Chittagong ditto.
84	Sasibhusan Mukerjee ...	23-0	Calcutta ditto.
85	Khodadad Mia ...	16-11	Hooghly ditto.
86	Parameswar Das Adak ...	17-0	Calcutta ditto.
87	Rajani Mohan Roy ...	17-10	Rangpur ditto.
88	Indra Kumar De ...	18-0	Dacca ditto.
89	Indra Narayan Jana ...	17-0	Calcutta ditto.
90	Farman Ali	15-9	Dacca ditto.
91	Sribas Das	16-11	Hooghly ditto.
92	Atul Chunder De ...	17-0	Calcutta ditto.
93	Bhutnath Mandal ...	16-11	Hooghly ditto.
94	Abdul Samad Khan ...	18-0	Dacca ditto.
95	Satish Chandra Nandi ...	16-0	Chittagong ditto.
96	Brajendra Kishore Kar ...	19-6	Private (Dacca).
97	Kshetra Nath Das† ...	22-0	Calcutta Training School
98	Rash Behari Chakravarti ...	17-3	Dacca ditto.
99	Debendra Nath Sahu ...	19-0	Calcutta ditto.
100	Parvati Charan Mandal ...	23-0	Private (Calcutta).
101	Gokul Chandra Kar ...	17-2	Dacca Training School
102	Nanda Kumar Saha ...	17-8	Do. ditto.
103	Nayan Chand Mullick ...	24-0	Calcutta ditto.
104	Ramgati Roy	18-0	Do. ditto.
105	Sarif Uddin	18-9	Rangpur ditto.
106	Banamali Bar ...	20-0	Dacca ditto.
107	Sarbesh Ali Akanda ...	17-0	Rangpur (Private).
108	Baman Das Ghosh ...	17-0	Calcutta Training School.
109	Kumarish Chandra Ghosal†	19-0	Do. ditto.
to	Nagendra Nath Majumdar†	17-0	Do. ditto.
111	Ram Chandra Kar ...	17-0	Dacca ditto.
112	Indra Narayan Banerjee ...	16-11	Hooghly ditto.
113	Ashutosh Buxi ...	19-0	Calcutta ditto.
114	Bhabataran Mukerjee ...	18-0	Do. ditto
115	Bhola Nath Mukerjee† ...	20-0	Hooghly (Private).

Low.

1	Bhupati Bhusan Banerjee...	17-8	Hooghly Training School.
2	Nabadwip Chandra Baishnab	15-0	Chittagong ditto.
3	Saim Uddin Mandal ...	16-3	Rangpur ditto.
4	Rajab Ali Mollah	21-3	Do. ditto.
5	Radha Binod Pal ...	18-11	Hooghly ditto.
6	Jadu Nath Sil ...	19-9	Rangpur ditto.
7	Bhujanga Bhusan Bhattacharjee.	15-3	Do. ditto.
8	Aswini Coomar De ...	15-0	Dacca ditto.
9	Indra Coomar Majumdar ...	17-5	Hooghly ditto.
10	Abbas Uddin Talukdar ...	18-3	Rangpur ditto.
11	Pramnath Biswas ...	20-0	Krishnagar ditto.
12	Rajani Kanta Chakravarti ..	15-9	Dacca ditto.
13	Rohini Ranjan Muchchiddi†	17-4	Chittagong (Private).
14	Samuel Biswas ...	19-0	Krishnagar ditto.
15	Rajani Kanta Roy ...	17-0	Dacca ditto.

† Candidates other than those whose names are marked with dagger have passed in Manual work.

SECOND GRADE—*concld.*

Low—concld..

No.	NAME.	Age.	Training School.
16	Sasi Bhusan Chowdhuri ...	19-0	Chittagong Training School
17	Hari Mohan Sarkar ...	16-9	Rangpur ditto.
18	Serajul Islam Chaudhuri ...	17-0	Chittagong ditto.
19	Chandra Sekhar Khan ...	19-10	Hooghly (Private).
20	Ram Charan Biswas ...	27-8	Calcutta (Private.)
21	Prasanna Mohan Majumdar	16-3	Dacca Training School.
22	Sasadhar Goswami ...	16-0	Calcutta ditto.
23	Kanti Chandra Chakravarti	18-0	Do. ditto.
24	Dwarka Nath Das ...	17-5	Dacca ditto.
25	Purna Chandra Mandal ...	15-0	Calcutta ditto.
26	Hari Mohan Nandi ...	15-1	Hooghly ditto.
27	Achyutánanda Chakravarti	19-0	Calcutta ditto.
28	Pasupati Nath Saha † ...	17-0	Do. ditto.

V. H. JACKSON,
Assistant Director of Public Instruction, Bengal.

CALCUTTA,
The 11th April 1905.

Results of the Overseer Examinations of the Bihar School of Engineering, 1905.

FIRST DIVISION.

(In order of merit.)

Chhatri Lal.
Ram Pratab Prasad.

SECOND DIVISION.

Ram Niranjan Singh.
Bisheshwar Dayal.
Jitendra Nath Dey.
Akhouri Mahabir Prasad.

THIRD DIVISION.

Asrar Ahmad.
Abinas Chandra Das.
Biswa Nath Tewari.

A. PEDLER,
Director of Public Instruction, Bengal.

The 19th April 1905.

Results of the Sub-Overseer Examination of the Bihar School of Engineering, 1905.

FIRST DIVISION.

Probodh Chandra Ghosh.
Banke Bahadur.
Matin Ahmad Siddiq.
Thakur Prasad.

SECOND DIVISION.

Probodh Chandra Mittra.
Rajib Nayan Kumar.
Banwari Singh.
Banwari Nandan.
Ram Chandra Prasad.
Krishna Kamal Singh.
Kamakhaya Charan Mozamdar.
Charu Gopal Mozamdar.

THIRD DIVISION.

Baidya Nath Mukerji.
Surendra Nath Mukerji.
Syed Moazur Rub.

A. PEDLER,
Director of Public Instruction, Bengal.

The 19th April 1905.

NOTICE.

COMMERCIAL CLASSES IN THE PRESIDENCY COLLEGE.

DAY classes in the following subjects will be opened in the College on the 25th June 1905:—

1. English (modern), especially English correspondence, including Commercial correspondence, letter-drafting and précis-writing.
2. Arithmetic, including Commercial and Mental Arithmetic.
3. Book-keeping, Short-hand and Type-writing.
4. Commercial History and Geography.
5. Bengali, especially Commercial correspondence, letter-writing, précis-writing and translation.

All will be admitted to the Day classes who have passed the School Final or the Entrance Examination or who are able to satisfy the Education Department by passing a simple preliminary test examination.

There is no age limit.

The fee for the Day classes is Rs. 3 a month.

P. K. RAY,
Offg. Principal, Presidency College.

PRESIDENCY COLLEGE, CALCUTTA, *the 8th March 1905.*

NOTICE.

IN connection with the Commercial classes in the Presidency College, Professor H. M. Percival will deliver a course of about 32 lectures in the *evening* on the Outlines of Political Economy.

The course will begin on Tuesday, the 7th March, at 6-30 P.M., and will be continued on Tuesdays and Fridays at the same hour until further notice. The first lecture will be open to the public. The subject will be treated popularly.

The fee for the whole course will be Rs. 5, payable in advance.

Tickets may be obtained from the College office between 11 A.M. and 4 P.M. on week days.

CALCUTTA,
The 20th March 1905.

P. K. RAY,
Offg. Principal, Presidency College.

CIVIL ENGINEERING COLLEGE, SIBPUR.

ENGINEER DEPARTMENT.

SESSION 1905-1906.

CANDIDATES for admission to the Engineer Department should apply to the Principal in the prescribed form on or before the 15th May 1905. Each application must be accompanied by a registration fee of Re. 1.

The session begins on Monday, the 5th June 1905.

Candidates must furnish proof that they have passed one of the following tests:—

(1) The B.A. Examination in the B course in Physics and Chemistry of the Calcutta University. The candidate's age must be under 23 years.
(2) The F.A. Examination of the Calcutta and Madras Universities.
(3) The Intermediate Examination of Allahabad and Punjab Universities.
(4) The Intermediate Examination for the degree of B.A. of Bombay University.
(5) The High School Examination for Europeans and Eurasians.

The candidate's age in (2), (3), (4) and (5) must be under 21 years.

In selecting candidates who have passed the F.A. (all other things being equal), preference will be given to those who have passed in Sanitary Science in addition to the ordinary subjects of the F.A Examination.

The maximum number to be admitted is limited to 40. The position in the University examination and the age of the candidate will be taken into consideration when selection is made, and such selection will be made by the Principal.

The tuition fee for students to the Engineer class is Rs. 10 a month for each month of the year, vacation included.

Ten scholarships will be awarded to students entering the Engineer Department not being already holders of junior or senior scholarships. Two of these will be reserved for

Europeans and Eurasians. Every applicant, before admission to the College, will be examined by the College Surgeon as to his physical strength, fitness for manual labour and eyesight.

Form of application for admission and any further particulars will be supplied upon application.

SIBPUR,
The 8th April 1905.

A. MACDONELL,
Offg. Principal, Civil Engineering College, Sibpur.

CIVIL ENGINEERING COLLEGE, SIBPUR.

APPRENTICE DEPARTMENT.

SESSION 1905-1906.

CANDIDATES for admission to the Apprentice Department should apply to the Principal in the prescribed form on or before the 6th May 1905. Each application must be accompanied by a registration fee of Re. 1.

The session begins on Monday, the 5th June 1905. Candidates must furnish proof that they have passed one of the following tests :—

(1) Standard VII or Middle School Examination of the Code of European Schools.
(2) University Entrance Examination.

The candidate's age must be at least fifteen and not more than seventeen years.

There are forty-five vacancies for natives and nine for Europeans and Eurasians. The selection of candidates for admission will be made by the Principal.

There is one vacancy on the free list for Christian Apprentices in June next and there are three on the reduced fee list. For natives there are five vacancies on the reduced fee list, and six more will become vacant during the month of June. Election to these lists will be made by the Board of Visitors. Forms to be filled up for the consideration of the Board can be had on application to the Principal.

Every applicant before admission to the College will be examined by the College Surgeon as to his physical strength, fitness for manual labour and eyesight.

Before an applicant is admitted to the College his parent or guardian must sign an agreement in the prescribed form.

All applications from Christian candidates for admission to the free or reduced fee lists must reach the Principal not later than 6th May, so as to enable the elections to be made by the Board of Visitors before the opening of the session.

The vacancies on the native list will be filled up after the opening of the session from those apprentices who have joined the College after admission. Forms of application for admission and further particulars will be supplied on application.

SIBPUR,
The 8th April 1905.

A. MACDONELL,
Offg. Principal, Civil Engineering College, Sibpur.

NOTICE.

THE half-yearly examination of Teachers in the Art of Teaching (approved in Government order No. 1500T.—G., dated the 17th September 1904) will, for the Dacca Division, be held in the Collegiate School, Dacca, on the 28th and 29th August 1905, for teachers of English subjects, and at the Dacca Training School on the 30th and 31st August 1905, for Teachers of Vernacular subjects.

Teachers of English subjects must ordinarily have passed the Entrance Examination, or some higher examination before they can be examined in the Art of Teaching. Exceptions may be made in the case of experienced teachers who have not passed the Entrance Examination. Teachers of vernacular subjects must have at least passed the Middle Vernacular Examination. Candidates for either examination should send in their names to this office on or before the 10th August 1905, and should bring their examination certificates with them on the day of examination.

H. A. BAMFORD,
Inspector of Schools, Dacca Division.

DACCA,
The 4th April 1905.

NOTIFICATION.

IT is hereby notified for general information that on the result of the Entrance Examination of 1905 the eleven third grade junior scholarships allotted to this Division under Government order No. 2916, dated the 9th September 1902, will be distributed as follows:—

Patna	2
Gaya	1
Shahabad	2
Saran	2
Champaran	1
Muzaffarpur	1
Darbhanga	2
Total ...	11

P. C. LYON, *Offg. Commissioner.*

PATNA COMMR.'S OFFICE, BANKIPORE, *the 15th April 1905.*

NOTIFICATIONS OF THE BOARD OF REVENUE.

No. 2140B.

NOTICE is hereby given that the Fifth Sale of Opium, the Provision of 1902-1903, will be held at the Government Opium Sale-room, No. 2 Bankshall Street, on Tuesday, the 2nd May 1905, at 11 A.M., and will comprise 4,000 chests, viz.—

	Chests
Opium manufactured at the Patna Factory, consisting of ...	2,000
Ditto at the Ghazipur Factory, consisting of ...	2,000
Total ...	4,000

2nd.—The general conditions of the sale now advertised will be the same as usual. They may be ascertained by reference to the notification issued on the 22nd November 1904 and published in the *Government* and *Exchange Gazettes*, or on personal application at the office of the Board of Revenue.

3rd.—The latest dates for deposit and clearance will be the 8th and 17th May 1905, respectively, that is to say, no Bank of Bengal Receipts, Government Promissory Notes or other Public Securities that may be tendered for deposit in redemption of Promissory Notes given by purchasers in the sale-room will be received after 3-30 P.M. of Monday, the 8th May 1905, and no Bank of Bengal Receipts in full payment of lots will be accepted after 3-30 P.M. of Wednesday, the 17th May 1905.

4th.—In addition to the quantity above advertised for sale, the following quantities, more or less, of the opium manufactured at the Patna and Ghazipur Factories will be brought to sale between the sale now advertised and December next on or about the dates specified below. The Board of Revenue, however, reserve to themselves the right of altering these dates, should circumstances render it expedient to do so:—

DATES.	Manufactured at the Patna Factory, about chests.	Manufactured at the Ghazipur Factory; about chests.	Total; about chests
On or about Tuesday, 6th June 1905 ...	2,000	2,000	4,000
On or about Tuesday, 4th July „ ...	2,000	2,000	4,000
On or about Tuesday, 1st August „ ...	2,000	2,000	4,000
On or about Tuesday, 5th September „ ..	2,000	2,000	4,000
On or about Tuesday, 26th September „ ...	2,000	2,000	4,000
On or about Wednesday, 1st November „ ...	2,000	2,000	4,000
On or about Tuesday, 5th December „ ..	2,000	2,000	4,000
Total ...	14,000	14,000	28,000

By order of the Board of Revenue, L. P.,

H. F. SAMMAN, *Offg. Secretary.*

BOARD OF REVENUE, L. P., CALCUTTA, *the 27th March 1905.*

No. 2939B.

NOTIFICATION.

CUSTOMS.

THE HON'BLE MR. K. G. GUPTA, I.C.S.

Dated Calcutta, the 18th April 1905.

IN supersession of the Notification, dated the 3rd January 1893, published in Part I, page 71, of the *Calcutta Gazette* of the 25th idem, it is hereby notified to all whom it may concern, under the provisions of secs. 9 and 72 of the Sea Customs Act, 1878, that the Collector of Customs, Chittagong, is ordinarily prohibited from granting permission to work cargo in sea-going vessels on Sundays. He shall, however, give written permission in the following cases:—

I. When the application to work is supported by a declaration in a prescribed form signed by the owner or agent of the vessel, certifying that the permission is absolutely necessary to enable the vessel to leave the port owing to the state of the river or to the condition of the weather.

II. When the application is made on grounds of special urgency, provided the Collector of Customs is satisfied that such grounds are sufficient.

III. When a vessel is a mail or regular steamer which calls at the port at fixed intervals.

IV. When the vessel is a native brig on which no European is employed.

V. When the application is made to discharge or load live-stock, ship's stores, ballast or coal for the ship's use.

2. These orders do not modify the existing orders under which a fee of Rs. 6 is charged for the services of the Inspector and Preventive Officer, or the orders contained in the Resolution of Government, in the Financial Department, dated the 24th September 1888, under which a fee of Rs. 100 is payable on Christmas Day, Good Friday, the King's Birthday and the 1st of January, in addition to the ordinary fee for the Inspector and the Preventive Officer.

By order of the Board of Revenue, L. P.,

H. F. SAMMAN,

Offg. Secretary.

ELECTION OF MUNICIPAL COMMISSIONERS.

NOTIFICATION.

IT is hereby notified for general information that the following gentlemen have been elected under section 9 of the Bengal Local-Self Government Act, III (B.C.) of 1885, at the recent general elections, to be members of the several Local Boards in the district of Khulna, representing the thana noted against each :—

Names of Local Boards.	Names of thanas.	Names of persons elected.
Bagerhat ...	Morelganj ...	Babu Jogendra Gopal Biswas.
		,, Nakuleswar Chatterjee.
	Rampal ...	Munshi Manulla Izardar.
Satkhira ...	Satkhira ...	Babu Ram Niranjan Roy Choudhuri.
		Munshi Keramtulla.
	Asasuni ...	Babu Mohendra Nath Nandi
	Kaliganj ...	Babu Rajendra Nath Banerjee.
		Munshi Aftabuddin Ahmad.
	Kalaroa ...	Babu Sashi Bhusan Banerjee.
		,, Purna Chandra Haldar.
	Magura (Tala) ...	Babu Lalit Mohun Chatterjee.

F. W. DUKE, *Offg. Commissioner.*

COMMR.'S OFFICE, PRESY. DIVN., CALCUTTA, *the 17th April 1905.*

NOTIFICATION.

IT is hereby notified for general information that the seventh general election of the Commissioners of the Kishanganj Municipality, in the district of Purnea, under Act III (B.C.) of 1884, will be held on Saturday, the 24th June 1905.

D. J. MACPHERSON, *Commissioner.*

COMMR.'S OFFICE, BHAGALPUR, *the 14th April 1905.*

NOTIFICATION.

IT is hereby notified for general information that under rule 21 (*b*) of the rules for the management and supervision of Charitable Hospitals and Dispensaries, Raj Kumar Mahendra Ranjan Ray, Messrs. A. Crouch, W. Hasell and F. A. Wearing have been appointed as members of the Committee for the management of the Kurseong Charitable Dispensary in place of Dr. J. M. Comley and Babu Sekhar Lal Ghose, who have left the district, and Revd. C. H. Owen and Mr. F. Willet, resigned.

C. R. MARINDIN, *Commissioner.*

COMMR.'S OFFICE, RAJSHAHI DIVN., DARJEELING, *the 17th April 1905.*

The Calcutta Gazette.

WEDNESDAY, APRIL 26, 1905.

PART IA.

Orders and Notifications by the Government of India, &c.

[*Reprinted from the "Gazette of India."*]

The following orders, issued by the Government of India in the Home Department, are republished for general information.

R. W. CARLYLE,
Offg. Chief Secy. to the Govt. of Bengal.

NOTIFICATIONS.

ESTABLISHMENT.

Simla, the 20th April 1905.

No. 327.—Mr. L. J. Kershaw, of the Indian Civil Service, Settlement Officer, Sibsagar, is appointed to officiate as Secretary to the Chief Commissioner of Assam during the absence, on leave, of Mr. F. J. Monahan, or until further orders.

No. 336.—The Honourable Sir Hugh Shakespear Barnes, K.C.S.I., K.C.V.O., has obtained permission from His Excellency the Governor-General of India to resign from the 8th May 1905 the office of Lieutenant-Governor of Burma. His Excellency is pleased to direct, as a mark of respect due to the character and services of Sir Hugh Shakespear Barnes, that all the honours and distinctions to which he is now entitled as Lieutenant-Governor of Burma shall be continued to him from the 8th May until the date of his embarkation for Europe.

MEDICAL.

The 20th April 1905.

No. 381.—With effect from the date on which he assumes charge of his duties, Lieutenant-Colonel C. P. Lukis, M.D., F.R.C.S., I.M.S. (Bengal), Civil Surgeon, Agra, is appointed to be Principal and Professor of Medicine, Medical College, Calcutta, and First Physician, College Hospital.

JUDICIAL.

The 18th April 1905.

No. 557.—Mr. C. P. Caspersz, District and Sessions Judge, 24-Parganas, took his seat as an officiating Judge of the High Court of Judicature at Fort William in Bengal on the 31st March 1905.

ECCLESIASTICAL.

The 19th April 1905.

No. 155.—The Ven'ble Arthur Kitchin, Archdeacon of Calcutta, is granted privilege leave for two months and eighteen days combined with furlough for one year, nine months and twelve days, with effect from the 27th April 1905, or the subsequent date on which he may avail himself of the leave.

H. H. RISLEY,
Secy. to the Govt. of India.

The following order, issued by the Government of India in the Finance Department, is republished for general information.

R. W. CARLYLE,
Offg. Chief Secy. to the Govt. of Bengal.

NOTIFICATION.

SEPARATE REVENUE.
STAMPS.

Simla, the 20th April 1905.

No. 2550Exc.—In exercise of the power conferred by section 9, clause (*a*), of the Indian Stamp Act, 1899 (II of 1899), the Governor-General in Council is pleased to direct that the duty chargeable under article 40 (*b*), Schedule I of the said Act, on an instrument of mortgage of a crop when the loan is repayable in more than one year, but not more than eighteen months, from the date of the instrument, shall be reduced to two annas for every sum secured not exceeding Rs. 100, and two annas for every Rs. 100, or part thereof, secured in excess of Rs. 100.

W. S. MEYER,
Secy. to the Govt. of India.

The following orders, issued by the Government of India in the Military Department, are republished for general information.

R. W. CARLYLE,
Offg. Chief Secy. to the Govt. of Bengal.

Simla, the 21st April 1905.

VOLUNTEER CORPS.

APPOINTMENTS, PROMOTIONS AND RESIGNATIONS.

Northern Bengal Mounted Rifles.

No. 332.—Veterinary Lieutenant Neill Dinning resigns his commission, with effect from the 25th February 1905.

1st Battalion, Bengal-Nagpur Railway Volunteer Rifle Corps.

No. 338.—Captain Edward Frederick Growse, Unattached List, resigns his commission, with effect from the 31st March 1905.

H. B. B. WATKIS, *Colonel*,
Offg. Secy. to the Govt. of India.

The Calcutta Gazette.

WEDNESDAY, APRIL 26, 1905.

PART IB.

ORDERS BY THE LIEUT.-GOVERNOR OF BENGAL.

MUNICIPAL AND LOCAL.

NOTIFICATIONS.

No. 223T.M.—The 17th April 1905.—It is hereby notified that, under section 27 of the Bengal Municipal Act, III of 1884, the Lieutenant-Governor is pleased to appoint Reverend D. Finlay to be a Commissioner of the Comilla Municipality, in the district of Tippera, *vice* Mr. P. J. DeLauney, resigned.

Tippera.

No. 254T.M.—The 20th April 1905.—Whereas a notification No. 160M., dated the 10th January 1905, was published at page 10, Part IB of the *Calcutta Gazette* of the 11th January 1905, declaring the intention of the Lieutenant-Governor to extend the provisions of sections 249 to 251 and 261 to 264 of Part VI and of Part X of the Bengal Municipal Act, III of 1884, to the Dumraon Municipality, in the district of Shahabad, and whereas no objection has been raised to the proposal within one month from the date of the publication of the above notification within the Municipality, it is hereby notified for general information that, in the exercise of the power vested in the Local Government by section 221 of the Act, and in accordance with the recommendation of the Commissioners of the Dumraon Municipality, made at a meeting, the Lieutenant-Governor sanctions the extension of the above provisions of the Municipal Act to the said Municipality.

Shahabad.

No. 269T.M.—The 20th April 1905.—Whereas a notification No. 110M., dated the 9th January 1905, was published at page 8, Part IB of the *Calcutta Gazette* of the 11th idem, declaring the intention of the Lieutenant-Governor to extend the provisions of Part IX of the Bengal Municipal Act, III of 1884, to Wards III and VII of the Darbhanga Municipality, in the district of Darbhanga, and whereas no objection has been raised to the proposal within one month from the date of the publication of the above notification within the Municipality, it is hereby notified for general information that in the exercise of the power vested in the Local Government by section 221 of the Act, and in accordance with the recommendation of the Commissioners of the Darbhanga Municipality, made at a meeting, the Lieutenant-Governor sanctions the extension of the above provisions of the Municipal Act to the said Wards of the Municipality.

Darbhanga.

No. 272T.M.—The 20th April 1905.—It is hereby notified that, under section 7 of the Bengal Local Self-Government Act, III of 1885, the following gentlemen have been elected to be members of the District Board of Hooghly :—

Hooghly.

Local Boards by which elected.	Names of Members.
Sadar	Babu Chandra Narain Roy. „ Khirode Krishna Biswas. „ Gopal Chandra Palit. „ Karuna Nidhan Singha. Rai Saroda Prasad Roy Bahadur.
Serampore	Babu Narendra Nath Mukerjee. „ Girish Chandra Chatterjee. „ Parbati Charan Mukerjee. „ Baroda Prasad De. „ Basanta Kumar Mitra.

The following gentlemen are appointed under section 7 of the Act to be members of the Board :—

The Civil Surgeon, Hooghly ... ...
„ Subdivisional Officer, Serampore ... ...
„ Subdivisional Officer, Arambagh ... ... } *Ex-officio.*
„ Road Cess Deputy Collector, Hooghly ... ...
„ Deputy Inspector of Schools, Hooghly ... ...
Babu Mohendra Chandra Mitra.
„ Rajendra Lal Goswami.
Maulvi Mazahurl Anwar.
Babu Benode Behary Banerjee.
„ Bejoy Narain Kundu.
Rai Saheb Peary Mohan Banerjee.
Babu Kali Das Banerjee.
„ Jnanendra Nath Singh Roy.

No. 290T.M.—The 22nd April 1905.—It is hereby notified that, under section 59 of the Bengal Municipal Act, III of 1884, the Lieutenant-Governor approves the election by the Commissioners of the Kushtia Municipality, in the district of Nadia, of Babu Jagadis Chandra Sen to be their Chairman, *vice* Mr. S. C. Mullick, resigned.

Nadia.

No. 292T.M.—The 22nd April 1905.—It is hereby notified for general information that the Lieutenant-Governor intends, in the exercise of the power vested in the Local Government by section 221 of the Bengal Municipal Act III of 1884, and in accordance with the recommendation of the Commissioners of the Lalgunge Municipality, in the district of Muzaffarpur, made at a meeting, to extend the provisions of sections 249 to 251, 252, 253 and 268 of the said Act to the above Municipality, unless good reasons are shown to the contrary within one month from the date of the publication of this notification within the Municipality.

Muzaffarpur.

E. A. GAIT,
Offg. Secy. to the Govt. of Bengal.

The Calcutta Gazette.

WEDNESDAY, APRIL 26, 1905.

PART II.

Advertisements.

[N. B.—Advertisements, Notices, &c., intended for insertion in this part of the Gazette cannot be received after Noon on Monday.]

LAND SALE NOTICES.

Notification A.

NOTICE is hereby given, under sections 6 and 13, Act XI of 1859, that the undermentioned estates and shares of estates in the district of Chittagong will be put up for sale at the office of the Collector of that district on the 1st May 1905 at 12 A M. for arrears of revenue and other demands, which by law are realisable as arrears of land revenue.

When in columns 5, 7 and 9 of the appended statement it is stated that only a share is to be sold, it is to be understood that a separate account is kept for that share.

Tauzi No.	Name of mahal and pargana.	Sadar jama of whole estate.	Whether the whole estate is to be sold.	If only a share is to be sold, specification of such share or shares.	Names of proprietors of property to be sold.	If only a share is to be sold, the sadar jama of such share.	If the whole estate is to be sold, the arrears due from it.	If only a share is to be sold, the arrears due from it.
1	2	3	4	5	6	7	8	9
		Rs. A. P.				Rs. A. P.	Rs. A. P.	Rs. A. P.
391 391 867 1178	Thana Satkania, taraf mauza Amirabad.	1,601 13 3	A share is to be sold.	Only the residuary share No. 2.	Taran Sinha Hazari and Srimati Golap Kumari.	800 15 8	.	284 1 3
1181 868 1274	Thana Sarwarganj, taraf Doulat Shah.	822 9 6	The whole estate is to be sold.	.....	Shaik Mokbul Ahamed Chowdhury and Ull Ahamed Chowdhury.	.....	8 2 6	.....
1273 1077 1266	Thana Satkania, mauza Gurumya Rabotta, taraf Mungat Ram Hazari	2,015 5 9	A share is to be sold	Only the residuary share No. 2.	Taran Sinha Hazari	1,206 12 9	.....	305 13 6
1461 1467 1469	Thanas Patya, Satkania, Patiekhari and Hathazari, taraf Karim Khan.	715 12 0	The whole estate is to be sold.	.....	Anowar Ali ...	.....	177 12 0	.....
1467 2694 23973	Thanas Chakoria, Patia, Roman and Town, taraf Ram Sundar Kanungoe.	340 6 6	A share is to be sold	Only the residuary share No. 2.	Salamat Ali Khan Chowdhury, Sher Ali Khan Chowdhury and others.	651 0 3		169 13 3
23974 23836	Thana Chakoria, mauza Bhuranpur, saraf taluk Srimati Thanda Bibi alias Chotta, taluk Sheomania Khan	898 13 0	The whole estate is to be sold.	.....	Prasana Kumar Rai ...	.....	280 4 3	.....

NOTE.—The figures shown in columns 8 and 9 indicate the arrears remaining unpaid on the 25th February 1905.

Chittagong Collectorate, the 20th March 1905.

F. P. DIXON, Collector.

Notification A.

NOTICE is hereby given, under sections 6 and 13, Act XI of 1859, that the undermentioned estates and shares of estates in the district of Cuttack will be put up for sale at the office of the Collector of that district on the 22nd day of May 1905 at 8 A. M. for arrears of revenue and other demands which by law are realizable as arrears of land revenue.

When in columns 5, 7 and 9 of the appended statement it is stated that only a share is to be sold, it is to be understood that a separate account is kept for that share.

Tauzi No.	Name of mahal and pargana.	Sadar jama of whole estate.	Whether the whole estate is to be sold.	If only a share is to be sold, specification of such share or shares.	Names of proprietors of property to be sold.	If only a share is to be sold, the sadar jama of such share.	If the whole estate is to be sold, the arrears due from it.	If only a share is to be sold, the arrears due from it.
1	2	3	4	5	6	7	8	9
		Rs. A. P.				Rs. A. P.	Rs. A. P.	Rs. A. P.
813	Pargana Alti, tape Sahajahanpur.	.....	.....	Kismat 6a. 4p. 16kt. ... ... The remaining interest 9a. 7p. 4kt. in each of the mauzas of the estate is excluded from sale.	Babu Balaram Bhramerber Rai and others.	4,630 0 0	.....	2,314 13 0
1313	Pargana Baruan, taluk Radhamohan Prasad.	.....	.....	Kismat 8a. 9p. 18kt. 15b. 16g. 2c. 3bed. The interest comprised in entire mauzas Dharpur, Saisindha, Nurpur, Kabirpur, Maheswarpur, Uper Baruan, Nilkanthapur, Doulpara, Kakuritud, Bhagabatipur, Swainkhand, Meendha are excluded from sale.	Balaram Sahu and others.	4,049 4 0	.....	109 5 3
26	Pargana Jajpur, taluk Sunderpur.	1,098 5 9	Whole	.....	Kangoi Dinabandhu Baliar Singh and others.	.....	396 7 8	.....
65	Pargana Jajpur, taluk Bhimkerpur.	.....	.....	13a. 9p. 17kt 2b. excludes 2a. 2p. 2kt. 14b. in each of the mauzas of the estate.	Dasarathi Senapati and others.	663		164 14 2

Cuttack Collectorate, the 28th March 1905. F. N. FISCHER, Collector.

Notification A.

NOTICE is hereby given, under sections 6 and 13, Act XI of 1859, that the undermentioned estates and shares of estates in the district of Jalpaiguri will be put up for sale at the office of the Collector of that district on the 20th May 1905 at 12 A. M. for arrears of revenue and other demands, which by law are realisable as arrears of land revenue.

When in columns 5, 7 and 9 of the appended statement it is stated that only a share is to be sold, it is to be understood that a separate account is kept for that share and that the other share or shares in the estate are excluded from the sale.

Tauzi No.	Name of mahal and pargana.	Sadar jama of whole estate.	Whether the whole estate is to be sold.	If only a share is to be sold, specification of such share or shares.	Names of proprietors of property to be sold.	If only a share is to be sold, the sadar jama of such share.	If the whole estate is to be sold, the arrears due from it.	If only a share is to be sold, the arrears due from it.
1	2	3	4	5	6	7	8	9
		Rs. A. P.					Rs. A. P.	
386	Bhutan-Duars, II, pargana Bhatibari.	768 8 0	Whole ...	.	The Ryduck Tea Syndicate, Limited	..	Land Revenue 363 4 0 Road and Public Works Cess 42 11 6 Dâk cess . 5 12 0 431 11 6	..

Jalpaiguri, the 3rd April 1905. J. F. GRUNING, Deputy Commissioner.

Notification A.

NOTICE is hereby given, under sections 6 and 13, Act XI of 1859, that the undermentioned estates and shares of estates in the district of Tippera will be put up for sale at the office of the Collector of that district on the 22nd May 1905 at 12 o'clock for arrears of revenue and other demands which by law are realizable as arrears of land revenue.

When in columns 5, 7 and 9 of the appended statement it is stated that only a share is to be sold, it is to be understood that a separate account is kept for that share.

Tauzi No.	Name of mahal and pargana.	Sadar jama of whole estate.	Whether the whole estate is to be sold.	If only a share is to be sold, specification of such share or shares.	Names of proprietors of property to be sold.	If only a share is to be sold, the sadar jama of such share.	If the whole estate is to be sold, the arrears due from it.	If only a share is to be sold, the arrears due from it.
1	2	3	4	5	6	7	8	9
		Rs. A. P.					Rs. A. P. KT.	
20	Bardakhat, hissa 1a. 4g. 2k. 1kt. 4dt. in pargana Bardakhat	13,819 4 9	Whole ..	..	Krishun Mongal Pal Choudhury, Navo Kisore Roy, Mirza Mohmed Sadik alias Gosole Mirza, Kali Charan Saha and several others.		578 12 8 5½	.....

Dated Comilla, the 12th April 1905. H. M. SCROOPE, Offg. Collector.

Notification A.

NOTICE is hereby given, under sections 6 and 13, Act XI of 1859, that the undermentioned estates and shares of estates in the district of Monghyr will be put up for sale at the office of the Collector of that district on the 29th May 1905 at noon for arrears of revenue.

When in columns 5, 7 and 9 of the appended statement it is stated that only a share is to be sold, it is to be understood that a separate account is kept for that share.

Tauzi No.	Name of mahal and pargana.	Sadar jama of whole estate.	Whether the whole estate is to be sold.	If only a share is to be sold, specification of such share or shares.	Names of proprietors of property to be sold.	If only a share is to be sold, the sadar jama of such share.	If the whole estate is to be sold, the arrears due from it.	If only a share is to be sold, the arrears due from it.
1	2	3	4	5	6	7	8	9
815	Sihanwan Karari, pargana Malki Sihanwan as per Register A.	Rs. A. P. 1,120 7 0	.....	The ijmali share which cannot be specified and which excludes the separate accounts specified below :—	Mussamat Raghunatho Kumri and others.	Rs. A. P. 509 7 0	Rs. A. P.	Rs. A. P. 66 7 0
				Rs. A. No. 2, Chaitu Singh ... 113 0 „ 3, Kali Prosad Singh. 213 0 „ 5, Kharag Singh .. 5 4 „ 6, Fazal Rahman 2 5 „ 7, Gumani Rai ... 4 8 „ 8, Mahesh Singh ... 43 9 „ 9, Bhim Singh, etc. 9 10 „ 10, Jhandoo Singh, etc. 74 7 „ 11, Bhagwan Prosad. 31 15 „ 12, Khanter Singh 28 4 „ 13, Gunnu Singh, etc. 79 0 „ 14, Rabi Choudhry 17 14 Total ... 620 0			

NOTE.—Separate accounts Nos. 2 and 3 will be closed—*vide* Commissioner's No. 3128R., dated 31st March 1905.

Monghyr Collectorate, the 19th April 1905. C. A. OLDHAM, Collector.

Notification B.

NOTICE is hereby given, under sections 6 and 13, Act XI of 1859, that unless the arrears mentioned below are paid on or before the next latest date of payment, viz., the 28th April 1905, the undermentioned estates or shares of estates in the district of Puri will be put up for sale at the office of the Collector of that district on the 10th July 1905 at 12 o'clock noon for the said arrears.

When in columns 5, 7 and 9 of the appended statement it is stated that only a share is to be sold, it is to be understood that a separate account is kept for that share, and that the other share or shares in the estate not specifically mentioned in column 5 are excluded from the sale.

Tauzi No.	Name of mahal and pargana.	Sadar jama of whole estate.	Whether the whole estate is to be sold.	If only a share is to be sold, specification of such share or shares.	Names of proprietors of property to be sold	If only a share is to be sold, the sadar jama of such share.	If the whole estate is to be sold, the arrears due from it.	If only a share is to be sold, the arrears due from it.	Nature and amount of demand for which to be sold.
1	2	3	4	5	6	7	8	9	10
169		Rs. A. P.		A. P.		Rs. A. P.	Rs. A. P.	Rs. A. P.	
2	Kilah Rupas, pargana Athais	1,699 0 0		Kismat ... 9 4	Trilochan Chandhuri and others.	995 5 0	.....	481 11 0	Due for last April 1904.
166 1	Ta. Ganeswarpur, pargana Banchas.	1,619 0 0	.....	„ ... 9 0	Baladev Prakas Bramhachari.	910 11 0	.....	455 0 0	Ditto.
166 2	Ditto	1,619 0 0	... .	„ ... 7 0	Chandra Moni Debya, mother and guardian of Hanuman Khuntia.	708 5 0	.....	334 0 0	Ditto.
68	Ma. Durmadespur, pargana Kotrabang.	979 0 0	Whole ...	.....	Raja Mukund Dev		439 0 0	.....	Ditto.
79 6	Ma. Thanthana, pargana Kotrabang.	688 0 0	... .	Kismat . 13 0	Dinabandhu Pain, brother and guardian of Gopi Nath Pain and others.	530 0 0	.....	264 14 0	Ditto.
867 1	Ta. Amuri, pargana Purbadesi.	1,216 0 0	. .	„ ... 8 0	Nayanmali Jemadin, mother and guardian of Durva Charan Jagadeb Rai.	698 0 0	.....	304 0 0	Ditto.
867 2	Ditto	1,216 0 0		„ .. 8 0	Radha Mohan Rai	698 0 0	..	304 0 0	Ditto

Puri Collectorate, the 7th April 1905. J. R. BLACKWOOD, Collector.

Notice of Sale for Arrears of Revenue.

NOTICE is hereby given, under section 6, Act XI of 1859, read with Act VII (B.C.) of 1868 and Act II (B.C.) of 1871 that the undermentioned Noabad taluks within the Cox's Bazar khas mahal, in the district of Chittagong, will be put up to public and unreserved sale at the Collector's office of that district on the 28th April 1905 for arrears of rent and cesses remaining unpaid on the 26th February 1906 —

No. of tenure.	Name of mauza, thana, and mahal	Name of Talukdar.	Sadar Jama.		Amount of arrears for which the tenure is to be sold.		
			Rent.	Cesses.	Rent.	Cesses.	Total.
			Rs. A. P.	Rs. A. P.	Rs. A. P.	Rs. A. P.	Rs. A. P.
1	Mauza Teknaf, thana Teknaf, taluk Fate Chowdhuri	Khema Chowdhuri and Nhaboke Chowdhuri and others.	1 874 6 0	83 10 6	691 11 0	17 8 9	709 3 9
73	Mauza Patili Machuakhali, thana Ramoo, taluk Shamadali	Nur Mahammad . ..	901 2 0	110 6 0	454 1 0	36 13 0	670 14 0
99	Mauza Kharalia, thana Ramoo, taluk Bhayerullah.	Kamala Kanta Sen	676 6 0	69 12 0	283 10 3	23 4 0	276 14 3
103	Mauza Chakmookul, thana Ramoo, taluk Kaloo and Kamali.	Jagat Chandra Bahaddar . ..	1,366 12 0	114 7 6	534 0 0	38 2 6	Paid. 572 2 6
119	Mauza Nunachari, thana Ramoo, taluk Gouri Sankar and Bodya Nath Kanungoe.	Golam Bari and Golam Kiberia and others.	886 1 9	73 11 6	282 4 0	24 8 9	346 13 9
183	Mauza Bharuakhali, thana Ramoo, taluk Mahammad Raja	Sm. Arapsamal herself and for her minor sons Abu, Sanojjama Kamaljama and Manirajjama and Sm Golapera herself and her minor sons Farok Ahamad and others.	1,106 4 0	141 13 6	454 2 0	47 4 6	551 6 6
206	Mauza Jantanala, thana Ramoo, taluk Golamali	Akter Kamal Chowdhuri	672 0 0	86 7 9	236 6 0	28 12 9	265 4 9
246	Mauza Manikpur, thana Chakaria, taluk Tholiafuroo.	Sm Dinendra Kumari	869 0 0	110 6 6	279 4 0	34 12 6	344 0 6
270	Mauza Bhoiamanikchar, thana Chakaria, taluk Bibi Sprah.	Asmat Ali and Jaha Bax .. .	1,379 8 0	173 0 0	691 6 0	87 15 0	456 5 0
346	Mauza Paharchanda, thana Chakaria, taluk Bibi Sprah.	Beni Madhab Sen	1,260 8 0	149 12 6	743 1 10	60 14 10	796 0 8
356	Mauza Tottong, thana Chakaria, taluk Haradas Bahaddar, Har Chandra and Nabin Chandra.	Nessamat Ali Chowdhuri ..	1,453 14 0	191 6 6	539 9 0	63 13 6	603 5 6
399	Mauza Battali, thana Chakaria, taluk Hari Dass Bahaddar.	Nessamat Ali	368 4 0	44 4 0	139 11 0	16 12 0	156 7 0
396	Mauza Rajakhali, thana Chakaria, taluk Bibi Sprah.	Nessamat Ali Chowdhuri	1,086 10 0	215 12 0	497 11 9	136 14 6	634 10 3
315	Mauza Potali, Machuakhali thana Ramoo, Etmam, Sm. Maymuna Khatun and Khorshed Ali.	Sm. Maymuna Khatun Chowdhuria and Khorshed Ali Chowdhuri.	614 6 0	19 3 6	3,286 10 0	87 10 6	3,389 4 6

The 15th March 1905. P. P DIXON, Collector

Notice of Sale for Arrears of Revenue.

NOTICE is hereby given, under section 6, Act XI of 1859, read with Act VII (B.C.) of 1868 and Act II (B.C.) of 1871, that the undermentioned Noabad taluks within the Sadar khas mahal, in the district of Chittagong, will be put up to public and unreserved sale at the Collector's office at that district on the 27th day of April 1905 for arrears of rent and cesses remaining unpaid on the 26th February 1905

No. of taluk.	Name of taluk with its situation.	Name of proprietor.	Sadar Jama.		Arrear.	
			Rent.	Cess.	Rent.	Cess.
			Rs. A. P.	Rs. A. P.	Rs. A. P.	Rs. A. P.
893	Mauza Bakalia, thana Town, mahal Noabad, taluk Ahamad Ali..	Abdul Rahaman and others ...	1,326 4 0	226 8 0	494 12 0	80 7 0
4787	Mauza Jujhkala, thana Fatikary, mahal Noabad, taluk Bar Ali Khan	Obedar Rahaman Khan	2,854 4 0	106 12 0	966 8 0	46 13 9
4871	Mauza Bhoopur, thana Fatikary, mahal Noabad, taluk Bar Ali Khan.	Nipruchainan Raja	703 8 0	26 12 0	268 10 0	13 12 9

The 14th March 1905. P. P. DIXON, Collector.

Notice of Sale for Arrears of Revenue.

NOTICE is hereby given, under section 6, Act XI of 1859, read with Act VII (B.C.) of 1868 and Act II (B.C.) of 1871, that the undermentioned Noabad taluks within the Patia khas mahal, in the district of Chittagong, will be put up to public and unreserved sale at the Collector's office of that district on the 26th April 1905, for arrears and cesses remaining unpaid on the 25th February 1905:—

No. of tenure.	Name of mauza, thana and mahal.	Name of Talukdar.	Sadar Jama.		Amount of arrear for which the tenure is to be sold.		
			Rent.	Cesses.	Rent.	Cesses.	Total.
			Rs. A. P.	Rs. A. P.	Rs. A. P.	Rs. A. P.	Rs. A. P.
14141/[illegible]	Thana Patia, mauza Charichanagar, mahal Noabad, taluk Ochman Sadagar, Eakup.	Raj Chandra Sen, son of Ram Kishore Sen of Sanhara and Shariatulla Sadadar.	520 0 0	14 13 0	195 2 0	5 9 0	200 11 0

The 14th March 1905 F. P. DIXON, Collector.

Notice of Sale for Arrears of Revenue.

NOTICE is hereby given, under section 6, Act XI of 1859, read with Act VII (B.C.) of 1868 and Act II (B.C.) of 1871, that the undermentioned Noabad taluk, within the Raozan khas mahal, in the district of Chittagong, will be put up to public and unreserved sale at the Collector's office of that district on the 26th April 1905 for arrears of rent and cesses remaining unpaid on the 25th day of February 1905.—

No. of taluk	Name of taluk with its situation.	Name of proprietor.	Sadar Jama.		Amount of arrears for which the taluk is to be sold		
			Rent	Cesses.	Rent.	Cesses.	Total.
			Rs. A. P.	Rs. A. P.	Rs. A. P.	Rs. A. P.	Rs. A. P.
1 [illegible]	Thana Fatikchery, mauza Hapania, mahal Noabad, taluk Farad Jafar	Nepruchain Mung Raja, son of Mathu Chowdhuri, of Manikchery, in Hill Tract, Chittagong.	894 10 6	67 9 6	446 10 6	25 9 9	472 3 6

Chittagong Collectorate, the 14th March 1905. F P DIXON, Collector.

Notice of Sale for Arrears of Revenue.

NOTICE is hereby given, under section 6, Act XI of 1859, Act VII (B.C.) of 1868 and Act II (B.C.) of 1871 that the undermentioned tenures in the Satkania khas mahal, in the district of Chittagong, will be put up to public and unreserved sale at the Collector's office of that district on the 27th day of April 1905 for arrears of rent and cesses remaining unpaid on the 25th February 1905.

No. of tenure	Name of tenure with its situation	Name of proprietor.	Annual Jama.		Amount of arrears for which the tenure is to be sold.		
			Rent.	Cesses.	Rent.	Cesses.	Total.
			Rs. A. P.	Rs. A. P.	Rs. A. P.	Rs. A. P.	Rs. A. P.
24/[illegible]	Thana Satkania, at present Banskhali, mauza Nakora, mahal Noabad, hal taluk Raj Kumar Roy.	Mohesh Chandra Bhattacherji ...	1,139 0 0	137 0 6	157 2 0	17 10 6	174 12 6
17/[illegible]	Thana Banskhali, mauza Chambal, mahal Noabad, taluk Tajenessa	Sm. Jobeda Khatoon herself and on behalf of minor sons Abdul Karim, Abdul Rahim, Abdul Salim and Abdul Khalek and daughter Sm. Jalloot Khatoon.	1,954 4 0	161 9 6	732 14 6	69 9 6	793 7 6
[illegible]/[illegible]	Thana Satkania, mauza Sarchatia, mahal Noabad, taluk Lal Mahomad Daroga	Girija Kripa Lala and Sarada Kripa Lala	1,053 12 0	101 13 6	395 11 6	36 3	433 14 9
[illegible]/[illegible]	Thana Satkania, mauza Chunate, mahal Noabad, taluk Fazarali Khan.	Salamat Ali Khan and Srimati Asharaf Bibee	907 2 0	22 4 0	339 11 6	8 5 6	347 0

Chittagong Collectorate, the 14th March 1905. F. P DIXON, Collector.

Advertisement of Sale.

NOTICE is hereby given that the undermentioned plots of land, no longer required by Government, situated on the Moghalserai-Gaya Railway, in the district of Gaya, will be put up for sale at 12 o'clock noon on Friday, the 2nd June 1905, corresponding to the 14th Jeth 1312 Fasli, at the Court of the Collector of Gaya.

The purchasers of the several plots of land will be subject to the following conditions:—

1st.—The purchasers will have no power to make any excavation on the land nearer than 15 feet from the Railway fencing, or plough the land closer than three feet from its foundation.

2nd.—If the amount of purchase-money does not exceed Rs. 100, the whole amount must be paid down at once.

3rd.—If the amount of purchase-money exceed Rs 100, one-fourth of the amount must be immediately deposited. If the balance be not paid by noon of the fifteenth day after the sale, reckoning the sale day as one, or if that day be a close holiday, then by noon of the first succeeding office day, the sale shall be cancelled, the sum deposited being forfeited to Government, and the lot again put up for sale at the risk of the defaulting purchaser, after issue of advertisement, as in the case of the original sale.

4th.—The plots of the land will be sold revenue-free to the highest bidders.

5th.—The purchasers shall be put in possession on receipt by the Collector of the orders of the Board confirming the sale.

Consecutive lot No.	Name of district.	Pargana and mauza.	Number of mile on which the land is situated.	Situated on which side of the railway.	Approximate area.	Land excluded from sale,	Commencement and termination of lot.	Boundary of lot.
					B. K. D.			
I	Gaya ...	Mauza Jamore, pargana Siris.	44th	On the south of the Railway line.	65 6 0	Nil	Nil	*North.*—Main line of Moghalserai-Gaya Railway. *South.*—Village Jianbigha. *East.*—Lands of village Jamore. *West.*—River Bait ne.
II	Do ...	Abdulpwe, pargana Charkawan.	35th	On the south and north of the Railway line.	16 15 0	Nil	1 & 2	1st lot bounded on the— *North.*—By the main line of the Moghalserai-Gaya Railway *South and east.*—By the lands of village Abdulpore. *West.*—By river Dhodai. 2nd lot on the— *North.*—By the lands of village Abdulpwe. *South.*—By the main line of the Moghalserai Gaya Railway. *East.*—By the lands of village Abdulpore. *West.*—By river Dhawar.
III	Do. ...	Rowna, pargana Kaber.	13th	On the south of the Railway line.	5 16 2	Nil	Nil	*North.*—Nora Nadi. *South, east and west.*—By lands of village Rowna.
IV	Do. ...	Jamalpore (Azmatgarh), pargana Kaber.	11th	On the north of the Railway line.	4 0 4	Nil	Nil	*North, west and east.*—By the lands of village Azmatgarh. *South.*—By main line.
V	Do. ...	Sahhawa, pargana Dakhmer.	9th & 10th	On the south of the Railway.	38 17 13	Nil	Nil	*North.*—Lands of village Sahhawa. *South.*—Main line of the Moghalserai-Gaya Railway. *East.*—Lands of Sahhawar and Dakhmer *West.*—Lands of Sahhawar.

Gaya, the 13th April 1905.

SHAMSUDDIN HYDER, *for* Collector.

Advertisement of Sale.

NOTICE is hereby given that the undermentioned plots of land, no longer required by Government, situated along the Chowrashi Branch of the Bengal-Nagpur Railway, in the district of Manbhum, will be put up to sale at 4 P.M. on Thursday, the 8th June 1905, corresponding to the 25th Jaista 1312 B.S., at Ramkanali station of the Bengal-Nagpur Railway.

The purchasers of the several plots of land will be subject to the following conditions:—

1st.—The purchasers will have no power to make any excavations on the land nearer than fifteen feet from the Railway boundary, or to plough the land nearer than three feet from the same

2nd.—If the amount of purchase-money does not exceed Rs. 100, the whole amount must be paid down at once.

3rd.—If the amount of purchase-money exceeds Rs. 100, one-fourth of the amount must be immediately deposited. If the balance be not paid by noon of the fifteenth day after the sale, reckoning the day of sale as one, or if that day be a close holiday, then by noon of the first succeeding office day, the sale shall be cancelled, the sum deposited being forfeited to Government, and the lot again put up for sale at the risk of the defaulting purchaser, after issue of advertisement, as in the case of original sale.

4th.—The plots of land will be sold revenue-free to the highest bidders.

5th.—The purchasers shall be put in possession on receipt by the Collector of the orders of the Board confirming the sale.

Consecutive lot No.	Name of district	Pargana and mauza.	Number of mile on which land is situate.	Situated on which side of the railway.	Approximate area of lot in bighas and in acres.	
					B. K. C.	A. R. P.
1 and 2	Manbhum ..	Pargana Chowrashi, villages Nodiha and Narainpur.	8	On the north side of the railway line.	27 9 5·01	9 0 12·73

GANGA CHARAN CHATTERJEE, Collector under Act I of 1894, Burdwan and Manbhum.

Land Acquisition Office, Burdwan and Manbhum, the 15th April 1905.

Advertisement of Sale.

NOTICE is hereby given that the undermentioned lot of land, no longer required by Government, situated along the Bengal-Nagpur Railway, in the district of Cuttack, will be put up to sale at 12 o'clock on Thursday, the 15th June 1905, corresponding with the 2nd Asadu 1312 Umli, at the Court of the Collector of Cuttack.

The purchasers of the several plots of land will be subject to the following conditions:—

1st.—The purchasers will have no power to make any excavations on the land nearer than 15 feet from the railway fencing, or plough the land closer than 3 feet from its foundation.

2nd.—If the amount of purchase-money does not exceed Rs. 100, the whole amount must be paid down at once.

3rd.—If the amount of purchase-money exceed Rs. 100, one-fourth of the amount must be immediately deposited. If the balance be not paid by noon of the fifteenth day after the sale, reckoning the day of sale as one, or if that day be a close holiday, then by noon of the first succeeding office day, the sale shall be cancelled, the sum deposited being forfeited to Government, and the lot again put up for sale at the risk of the defaulting purchaser, after issue of advertisement, as in the case of original sale.

4th.—The plots of land will be sold revenue-free to the highest bidder.

5th.—The purchasers shall be put in possession on receipt by the Collector of the orders of the Board confirming the sale.

Consecutive lot No.	Name of district.	Pargana and mauza.	Number of mile on which land is situate.	Situated on which side of the railway.	Approximate area of lot in bighas and in acres. B. K. C.	A. R. P.	Land excluded from sale from each lot. Reasons for exclusion.	A. R. P.	Commencement and termination of lot.	Boundary of lot.
1	Cuttack ...	Pargana Cuttack Haveli, mauza Mandapara.	10	West ...	.	28 2 37	.....		.....	The khasra and Railway bhouria numbers are given below:— 1/230, 2/349, 3/350, 4/351, 5/351, 6/351, 7/356, 8/356, 9/356, 10/357, 11/358, 12/359, 13/360, 14/361, 15/363, 16/363, 17/364, 18/349, 19/365, 20/366, 21/367, 22/368, 23/369, 24/370, 25/371, 26/372, 27/373, 28/374, 29/375, 30/376, 31/377, 32/378, 33/379, 34/380, 35/381, 36/382, 37/383, 38/342, 39/383, 40/383, 41/383, 42/384, 43/385, 44/385, 45/386, 46/386, 47/386, 48/386, 49/386, 50/387, 51/388, 52/389, 53/389, 54/389, 55/390, 56/391, 57/391, 58/391, 59/392, 60/346, 61/395, 62/394 and 63/349.

Cuttack Collectorate, the 19th April 1905.

F. N. FISCHER, Collector.

Advertisement of Sale.

NOTICE is hereby given that the undermentioned plots of land, no longer required by Government, situated along the Hajipur Branch Railway, in the district of Muzaffarpur, will be put up to sale at 1 o'clock on Friday, the 30th June 1905, corresponding with the 13th Jaith of 1312 Fusli, at Muzaffarpur.

The purchasers of the several plots of land will be subject to the following conditions:—

1st.—The purchasers will have no power to make any excavations on the land nearer than 15 feet from the railway boundary, or to plough the land nearer than 3 feet from the same.

2nd.—If the amount of purchase-money does not exceed Rs. 100, the whole amount must be paid down at once

3rd.—If the amount of purchase-money exceed Rs. 100, one-fourth of the amount must be immediately deposited. If the balance be not paid by noon of the fifteenth day after the sale, reckoning the day of sale as one, or if that day be a close holiday, then by noon of the first succeeding office day, the sale shall be cancelled, the sum deposited being forfeited to Government, and the lot again put up for sale at the risk of the defaulting purchaser, after issue of advertisement, as in the case of original sale.

4th.—The plots of land will be sold revenue-free to the highest bidders.

5th.—The purchasers shall be put in possession on receipt by the Collector of the orders of the Board confirming the sale.

Consecutive lot No.	Name of district.	Pargana and mauza.	Number of mile on which land is situate.	Situated on which side of the Railway.	Approximate area of lot in bighas and in acres.		Land excluded from sale from each lot		Commencement and termination of lot.	Boundary of lot.
					B. K. C.	A. R. P.	Reasons for exclusion.	A. R. P.		
1	Muzaffarpur.	Chupraledi *alias* Maripore and Bhagwanpore, pargana Besara.	Mile 1 of Hajipur line.	West of the Railway.	0 12 5	0 0 32		.....	.	*North*—Orchard of Tabarak Hussain. *South*—Public road. *East*—Railway fencing. *West*—Orchard of Kunja Sahu.
2	Ditto ...	Chupraledi *alias* Maripore.	Ditto ...	East of the Railway.	0 4 4	0 0 11·2		.	.....	*North*—Garden of Mr. Franjy *South*—Public road. *East*—Garden of Mr. Franjy. *West*—Railway fencing.
3	Ditto ...	Ditto ...	Miles 1 and 2 of Hajipur line.	Ditto ...	0 4 0	0 0 11	.....	.....		*North*—Public road. *South*—Orchard of Safdar Hussain. *East*—Orchard of Abdul Jabar. *West*—Railway fencing.
4	Ditto ...	Ditto ...	Ditto ...	On both sides of the Railway.	2 18 2	0 2 20	This being a part of the District Board road.	0 2 20	.....	

The 17th April 1905.

KALI MOHAN SEN, for Collector.

Statement of the Affairs of the Bank of Bengal for the week ending 18th April 1905.

LIABILITIES.

		Rs.	A.	P.
Capital paid up		2,00,00,000	0	0
Reserve Fund		1,32,00,000	0	0
Public Deposits at Head Office ... ... Rs.	67,67,866 0 0	1,49,42,392	1	9
Ditto ditto at Branches ,,	81,74,526 1 8			
Other Deposits at Head Office and Branches		11,46,52,210	5	8
Bank Post Bills, &c.		19,16,782	6	7
Sundries		27,64,834	12	2
Rupees ...		16,74,76,219	10	1

ASSETS.

		Rs.	A.	P.
Government Securities		1,38,43,105	1	11
Other authorised investments		75,40,603	13	8
Loans on Government and other authorised securities		3,46,83,823	13	2
Accounts of Credit on ditto ditto ...		1,98,65,519	14	7
Bills discounted and purchased		3,44,46,338	14	0
Balances with other Banks		25,39,799	8	6
Bullion		...		
Dead Stock		18,42,849	8	4
Stamps		13,901	12	10
Sundries		13,62,393	12	2
		11,61,38,337	3	2
Cash and Currency Notes at Head Office* ... ... Rs.	3,15,03,175 4 1	5,13,37,882	6	11
Cash and Currency Notes at Branches† ,,	1,98,34,707 2 10			
Rupees ...		16,74,76,219	10	1

* Includes Sovs. & ½ Sovs., value Rs. 6,50,070 0 0
† Do. do. do. ,, 1,35,115 0 0
Rs. 8,25,765 0 0

By order of the Directors,

H. TREBLE,
Offg. Chief Accountant.

W. D. CRUICKSHANK,
Secretary and Treasurer.

Rate for Demand Loans 5 per cent.
Percentage 38·23.

BANK OF BENGAL,
Calcutta, 20th April 1905.

(461—1)

Abstract Statement of the Uncovenanted Service Family Pension Fund for the quarter ending 31st July 1904, being the first quarter of the year 1904-05, compared with the corresponding quarter of the year 1903-04.

PARTICULARS.	For the quarter ending 31st July 1904.	For the quarter ending 31st July 1903.	Increase.	Decrease.
	Rs. A. P.	Rs. A. P.	Rs. A. P.	Rs. A. P.
Balance in favour of the Fund at the end of the previous quarter	1,56,91,205 0 3	1,55,38,368 5 6	1,52,836 10 9	.....
ADD RECEIPTS—				
Subscriptions from 1st May to 31st July 1904 in the Widows' Fund	1,16,854 10 5	1,20,997 12 6	.....	4,143 2 1
Subscriptions from 1st May to 31st July 1904 in the Children's Fund	61,989 7 9	64,678 8 0	.....	2,689 0 8
Income and outlay on Office buildings and grounds	987 4 0	1,813 15 0	.....	*826 11 0
Fees and stamps	8 0 0	13 8 0	.....	5 8 0
Amount at credit of subscribers under Rule 55 transferred to divisible surplus	.....	558 2 0	.....	558 2 0
Total Receipts ...	1,79,839 6 2	1,88,061 13 6	.....	8,222 7 4
GRAND TOTAL ...	1,58,71,044 6 5	1,57,26,430 3 0	(A)1,52,836 10 9	8,222 7 4
DEDUCT DISBURSEMENTS—				
Pensions payable to incumbents in the Widows' Fund ...	1,64,544 15 8	1,61,373 13 9	3,171 1 11	.....
Ditto ditto in the Children's Fund ...	91,287 2 4	90,890 9 0	396 9 4	.....
Establishment and contingencies	11,380 1 0	12,518 13 4	.....	1,138 12 4
Loss by exchange on remittances out of India	15,265 14 11	12,676 7 2	2,589 7 9	.....
Commission paid for money-orders	821 1 0	827 11 0	.....	6 10 0
Amount of divisible surplus divided amongst qualified subscribers in the Widows' Fund	2,91,429 12 0	3,12,231 0 0	.....	20,801 4 0
Amount of divisible surplus divided amongst qualified subscribers in the Children's Fund	74,612 4 0	1,13,598 12 0	.....	38,986 8 0
Total Disbursements ...	6,49,341 2 11	7,04,117 2 3	(B) 6,157 3 0	60,933 2 4
Balance in favour of the Fund ...	1,52,21,703 3 6	1,50,22,313 0 9	(C) 1,46,679 7 9	52,710 11 0
GRAND TOTAL	1,58,71,044 6 5	1,57,26,430 3 0	1,52,836 10 9	8,222 7 4
Proportion of divisible surplus payable to qualified members of more than five years' standing	91,510 8 0	1,06,457 7 0	.....	14,946 15 0

	Widows' Fund.	Children's Fund.	Widows' Fund.	Children's Fund.	Widows' Fund.	Children's Fund.	Widows' Fund.	Children's Fund.
Number of subscribers	1,219	765	1,264	789	...	...	45	24
Ditto of incumbents	690	571	690	578	...	...	...	7
Ditto of subscribers sharing abatement	1,164	669	1,184	690	...	...	20	1

	Rs. A. P.
A.—Net increase in grand total of Receipts ...	1,44,614 3 5
B.—Net decrease in total Disbursements ...	54,775 15 4
C—Net increase in Balance ...	1,89,390 2 9

* The difference (Rs. 826-11) represents the municipal rates.

P. PONTIPEL, *Chartered Accountant*,
J. C. C. GRAY, *Accountant*, } *Auditors.*

Published by order of the Directors.

A. E. MEDLYCOTT, *Accountant.*

RIVERS HOWE, *Secretary.*

U. S. F. F. Fund Office, Calcutta, the 6th April 1905.

(446—1)

FORM II.

INSTRUCTIONS 97 AND 120.

Abstract of the Estates Partition Fund of district Jessore for the year ending 31st March 1905, prepared as required by section 42, Act V (B.C.) of 1897.

	Rs.	A.	P.
Balance at credit of the Fund on 1st April 1904 ...	10,684	0	2
Receipts for the year	19,240	0	3
Disbursements during the year	10,065	11	7
Balance at credit on 31st March 1905	19,858	4	10

An amount of Rs. 12-8 (rupees twelve and annas eight) only on account of both receipts and charges for stamp duty of the Partition Fund is omitted from this abstract.

Jessore Collectorate, the 19th April 1905. (480—1) M. N. MUKHERJI, for *Collector*..

NOTICE.

In the Court of the Munsif at Balasore.

EXECUTION CASE No. 181 OF 1905.

Iswar Chandra Chaudhuri, decree-holder, *versus* Chaudhuri Gopendra Nandan Das Mahapatra, judgment-debtor.

TO be sold by the Nazir of the Munsif's Court at Balasore on the 15th May 1905 for realisation of Rs 248-15-9—

The entire 16 annas share belonging to the judgment-debtor of the estate Iukhraj-bastafti mahal Raghunathpur, pargana Bhograi, bearing tauji No 1375 of the Balasore Collectorate, station Baliapal. Government revenue payable for the entire tauzi is Rs. 616.

ANNADA CHARAN SEN, Munsif.

Balasore, the 11th April 1905. (449—1)

In the Court of the Subordinate Judge of Bankura.

TITLE EXECUTION CASE No. 31 OF 1905.

Rohini Coomar Panja and others, decree-holders, *versus* Nolini Nath Singha Deb and others, judgment-debtors.

	Rs.	A	P.
Amount due	62,473	6	9
Interest, etc.	490	8	0
Total ...	62,963	14	9

EIGHT annas zamindary right and title of 22 mauzas named Kuchikole, etc in pargana Vishnupore, Lat Kuchikole district Bankura, bearing tauzi No. 6 of the Bankura Collectorate and paying annual revenue to Government Rs. 8,224-7-9 for the entire estate.

Approximate value Rs. 8,000.

The above property will be sold by the Nazir of the District Judge's Court, Bankura, at 7 A.M on the 6th day of May 1905.

DURGA CHARAN SEN,

Subordinate Judge, Bankura.

Bankura, the 18th April 1905. (479—1)

Hasimara Tea Company, Limited (Old Company), in Liquidation.

NOTICE is hereby given that a General Meeting of the Members of the above-named Company will be held at No. 101-1 Clive Street, Calcutta, on Tuesday, the 30th May 1905, at 12 o'clock noon, for the purpose of having an account laid before them showing the manner in which the winding up has been conducted and the property of the Company disposed of, and of hearing any explanation that may be given by the Liquidators, and also of determining by Extraordinary Resolution the manner in which the books, accounts and documents of the Company and of the Liquidators thereof shall be disposed of.

JOHN DAVENPORT,
T. A. MAGNUS,
Liquidators.

Calcutta, dated the 25th April 1905. (451—1—259)

Notification.

THE following scale of charge framed by the Commissioners for the Port of Calcutta, with effect from 25th July 1904, under section 105, Act III (B.C.) of 1890, and approved by the Local Government in letter No. 12T.—Marine, dated 17th April 1905, is published for general information, under the provisions of section 107 of the said Act:—

Description.	Charge.
Loading tea into wagons from direct shipment, Tea Sheds at Garden Reach.	Two pies per chest.

By order of the Commissioners,

C. KILLICK,
Acting Secretary.

Port Commissioners' Office, Calcutta, the 20th April 1905 (489—1)

Notification.

THE zamindari dák cess of the Bogra district has been fixed for the ensuing five years, commencing from January 1903, at the rate of one rupee per cent. per annum on the land revenue of estates paying revenue amounting to Rs. 50 and upwards and of some estates the proprietors of which are paying an aggregate revenue of Rs. 50. It is payable in two instalments, viz., 29th May and 13th December each year. Estates of which the revenue may become less than Rs. 50 by present or future partition will not be exempted.

J. N. GUPTA, Offg. Collector.

Bogra, the 19th April 1905.

Dacca District Board.

NOTICE FOR TENDERS.

SEALED TENDERS in Form No 2, to be had in the District Engineer's Office, are invited for the construction of a steel girder bridge over the Mirpur river, Dacca district, and will be received up to 3 P.M. of Saturday, the 20th May 1905, by the Chairman, District Board, Dacca.

Amount of estimate, Rs. 1,13,390.

No tender will be received without the sum of Rs 2,300 as earnest-money being deposited into the local Treasury to the credit of the District Fund and the Treasury receipt being attached to the tender.

Plans and estimates can be seen in the District Engineer's Office, Dacca.

The tenderers will state the percentage above or below the estimated rates at which they can undertake to do the work, and the successful tenderer will have to deposit 10 per cent. of the amount contracted for for the due performance of the work

Date of commencement of work ... 1st October 1905.
Date of completion of work ... 30th September 1906.

The acceptance of the tender rests with the Chairman of the District Board, who does not bind himself to accept the lowest or any tender, or to assign reason for the rejection of any tender.

J. T. RANKIN, Chairman.

Dacca District Board's Office, the 19th April 1905. (483—2)

For Sale.

TENDERS are invited for the purchase of excellent well-seasoned *sál* plankings, beams and scantlings, cut to the following sizes:—

(i) Plankings ... 27½" to 36½" long,
4" to 14" broad,
½" to ¾" thick,
amounting approximately to 1,094,128 supl. feet.

(ii) Beams ... 21' × 14" × 4" to 10' × 13" × 4" } about 200.

(iii) Scantlings ... 5' × 3" × 2" to 12' × 3" × 2" } about 300.

Intending purchasers are requested to submit their offers with the quantities they wish to purchase to the undersigned before the 10th of May.

Undersigned reserves to himself the right of accepting the highest or any tender.

J. CHRISTIAN, Factory Supdt

Patna Opium Factory, Gulzarbagh, the 17th April 1905.

The Commissioners for the Port of Chittagong.

NOTIFICATION.

THE following revised scale of charges proposed by the Commissioners for the supply of water to the shipping and approved by the Local Government in letter No. 641 Marine, dated the 7th April 1905, as a temporary measure, is published for general information in accordance with the provisions of section 33 of the Chittagong Port Commissioners' Act, IV (Bengal) of 1887:—

	Rs
For any quantity not exceeding 1,000 gallons	10
For any quantity exceeding 1,000 gallons, per 1,000 gallons, or part thereof	10

W. MAUDE,
Chairman of the Port Commissioners.

Chittagong, the 15th April 1905. (421—3)

Wanted

HEAD CLERK, permanent, for Hooghly Collectorate, pay Rs. 80.

Must be thoroughly experienced in Collectorate work. Apply before 30th April.

H. D. CARRY, Collector.

Chinsura, the 17th April 1905.

Wanted

AN experienced Overseer for the Muzaffarpur District Board on a salary of Rs. 80 rising to Rs 100 by biennial increments of Rs 4 and travelling allowance of Rs 30 per mensem. The candidates must be qualified under Bengal Government Notification No. 3334L.S. G., dated the 20th December 1901. Applications with copies of certificates will be received by the District Engineer up to 30th April 1905.

(413—2)

Notice.

WANTED an active and experienced Road Overseer for the Garo Hills district. Salary Rs. 60 rising to Rs. 90 by annual increments of Rs 2 and horse allowance of Rs. 30 per mensem. Nobody need apply who does not possess at least an Overseer's certificate from an Indian Engineering College.

Applications will be received by the undersigned up to 30th April 1905.

The post is not pensionable.

A. PLAYFAIR, CAPT., I A.,
Deputy Commissioner, Garo Hills, Assam.

Tura, the 6th April 1905.

Notice.

WANTED an Accountant for District Engineer's Office of the Hazaribagh District Board on a monthly salary of Rs. 60. No one need apply who is not a passed Accountant. Preference will be given to those who have experience of District Engineer's accounts. Applications will be received by the undersigned up to the 1st May next.

H. F. E. B FOSTER,
for Chairman, District Board.

Hazaribagh, the 12th April 1905. (416—2)

Notice.

WANTED an Assistant Sub-Inspector of Schools on Rs. 30 per month and another on Rs. 40 per month with prospect of gradual promotion to Sub-Inspectorships on Rs. 50, Rs. 60 and Rs 75 per month, and with consolidated travelling allowance of Rs. 15 a month each.

The candidates are referred to the rules for the appointment of Sub-Inspectors.

Applications with copies of testimonials will be received by the undersigned up to 1st May 1905.

H. F. E. B. FOSTER,
for Chairman, District Board.

Hazaribagh, the 12th April 1905. (417—2)

Notice.

WANTED a Compositor for the Saran District Board Press. Salary Rs. 25 a month rising to Rs. 30 by periodical increments. No one need apply who has not experience in Press work. The applications will be received by the undersigned on or before the 6th May 1905.

JAGDAM SAHAI,
Vice-Chairman, District Board, Saran.

Chapra, the 15th April 1905. (420—3)

WANTED temporarily for six months a Head Computor for the Area section of the Bamanghatti settlement, Mourbhanj State, on a salary of Rs. 35 per mensem. None need apply who has no practical experience in the work and does not at all know English. Applications with copies of testimonials will be received by the undersigned up to the end of April 1905.

S. K. CHATURJEE,
Settlement Officer, subdivision Bamanghatti, State Mourbhanj,
Post Office Bahalda, Orissa.

Bahalda, the 14th April 1905. (422—2)

WANTED a Head Clerk and Accountant for the Office of the District Engineer, Howrah, on a monthly pay of Rs. 40 rising to Rs. 60 by annual increment of Rs. 2 The candidate must hold a certificate of having passed the examination prescribed in the Public Works Department Code, as required by rule 9 of the Government Notification No. 3334L.-S G., dated the 20th December 1901 Previous experience of work in District Engineer's office is desirable.

Applications, with copies of testimonials and statement of the age of the candidate, must reach the undersigned on or before the 5th May 1905.

M N. RAY, Vice-Chairman, District Board.

Howrah, the 19th April 1905. (473—1)

Wanted.

A HEAD CLERK AND ACCOUNTANT for the Murshidabad Municipality on a salary of Rs. 20 per month, who will also act as a Clerk of the Murshidabad Dispensary Committee on an extra allowance of Rs 5 per month at present for three months only with prospect of being made permanent. The selected candidate shall have to furnish a security deposit of Rs. 200 in cash. Applications with copies of testimonials stating qualifications, age and respectability will be received by the undersigned up to 30th April 1905.

R. SINHA, Chairman.

Municipal Office, Murshidabad, the 19th April 1905. (482—1)

Wanted

THREE English-knowing passed Civil Hospital Assistants for employment as Sanitary Inspectors in the subdivisions of this district for a period of six months

Pay Rs. 30 per month each with a fixed conveyance allowance of Rs. 10.

The successful candidate will have to join his post in the first week of May next.

Applications with testimonials will be received by the undersigned up to 30th April 1905.

J. DONALD, Chairman, District Board, Gaya.

Gaya, the 19th April 1905. (484—1)

Wanted

A TAHSILDAR on a salary of Rs. 25 per mensem. The selected candidate will have to furnish a security of Rs. 1,000 in cash or promissory notes.

A naib tahsildar on a salary of Rs. 20 per month. The selected candidate will have to furnish security to the extent of Rs. 500 in cash or promissory notes.

A muharrir on a salary of Rs. 20 a month. The selected candidate will have to furnish a security of Rs. 200 in cash or promissory notes.

A law clerk on a salary of Rs. 22-8 a month. The selected candidate will have to furnish a security of Rs. 500 in cash or promissory notes.

A muharrir on a salary of Rs. 15 a month. The selected candidate will have to furnish a security of Rs. 150 in cash or promissory notes.

None need apply who has no experience in the works of the Court of Wards Department.

Applications with copies of testimonials will be received by the undersigned up to the 10th May 1905.

SYED NIJABAT HOSSAIN,

General Manager, Deoghar and Madhupur Court of Wards' Estates.

Deoghar, the 19th April 1905 (486—2)

Wanted

A FIELDMAN for the Farm Establishment of this office on Rs. 30—4—50 per mensem with free quarters.

Only qualified candidates with practical experience in Agriculture and physically fit for outdoor work need apply to the undersigned up to the 30th April 1905.

B. COVENTRY,

Director, Agricultural Research Institute, Pusa, Bengal.

Pusa, the 19th April 1905.

Howrah Municipality.

SANITARY DEPARTMENT.

WANTED a European Sanitary Inspector on a salary of Rs. 250 per month rising by annual increments of Rs 10 to Rs. 300.

Candidates must be pure Europeans, of active habits and under 35 years of age, able to speak Hindustani and accustomed to the control of large bodies of workmen.

Preference will be given to a trained Sanitary Inspector holding the certificate of the "Sanitary Institute" or similar qualification and with a knowledge of Engineering.

Applications endorsed "Sanitary Inspector" accompanied by copies only of testimonials and certificates (which will not be returned) should be addressed to the Chairman and received by the undersigned up to the 8th proximo.

By order,

K. N. TAGORE,

Secretary.

The 20th April 1905. (486—1)

Howrah Municipality.

WANTED two experienced Building Inspector and Assistant Assessors on a graded pay of Rs. 100—10—150 each per month.

Candidates must be passed Upper Subordinates of an Engineering College with practical experience, of active habits and under 35 years of age. They should be men accustomed to the direction and control of large bodies of workmen.

Applications addressed to the Chairman and endorsed "Building Inspector," accompanied by copies of diplomas and certificates (which will not be returned), will be received by the undersigned up to the 8th proximo.

By order,

K. N. TAGORE,

Secretary.

The 20th April 1905. (487—1)

WANTED a second clerk for the General Manager's Office, Deoghur, on a salary of Rs. 31 per mensem. An undergraduate with experience in the works of the Court of Wards Department will be preferred. Applications with copies of testimonials will be received by the undersigned up to the 10th May 1905.

SYED NIJABAT HOSSAIN,

General Manager.

Deoghur, the 20th April 1905. (488—2)

WANTED two clerks—one on Rs 40 and the other on Rs 20 per mensem—for the office of the Deputy Director of Agriculture, Bengal. The posts are at present temporary for one year, but there is prospect of their being made permanent. Candidates must know shorthand and typing and the senior clerk should be a B.A.

Apply at once to

F. SMITH, Esq.,

Deputy Director of Agriculture, Bengal.

Calcutta, the 20th April 1905.

Notice.

WANTED a B.E. for appointment as a Teacher in the Ahsanulla School of Engineering at Dacca Salary Rs 100 a month in Class V of the Subordinate Educational Service.

Applications with testimonials must reach the undersigned not later than the 15th May 1905.

V. H. JACKSON,

Asst. Director of Public Instruction.

Calcutta, the 21st April 1905.

GIRINDRA SIRCAR, M.A., B.L., intends to be enrolled as a Vakil of the High Court, Calcutta.

(382—4—238)

Notice.

BABU GUNADA CHARAN SEN, M.A. B.L., Pleader, Barisal, intends to be enrolled as a Vakil of the High Court.

(272—4—239)

SARAT CHANDRA SANYAL, M.A., B.L., Pleader, intends to be enrolled as a Vakil, High Court, Calcutta. (400—4—247)

NRIPENDRA NATH SIRCAR, M.A., B.L., intends to be enrolled as a Vakil, High Court, Calcutta.

(442—4—255)

Notification.

TO be peremptorily sold by the Registrar of the High Court of Judicature at Fort William in Bengal in its Ordinary Original Civil Jurisdiction in his sale-room in the Court-house on Saturday, the 13th day of May 1905, at the hour of 12 o'clock noon, pursuant to a decree and order of the said Court, made in suit No. 698 of 1900 (wherein Akshoy Kumar Ghose is the plaintiff and Manmathanath Dutt is the defendant), dated respectively the 13th day of December 1900 and 26th day of November 1903, the undermentioned properties of Manmathanath Dutt :—

Lot I.—All that piece or parcel of rent-free tenanted land, containing by estimation 5 bighas 7 cottahs 1 chitak and 37 square feet, be the same a little more or less, situate, lying and being at No. 138 Cornwallis Street and No. 33 Shampukur Street in Sutanutty in the town of Calcutta, and butted and bounded on the north partly by Shampukur Street and partly by filled up Municipal sewer ditch, on the east by the Cornwallis Street, on the south partly by a filled up Municipal sewer ditch and partly by No. 7 Obhoy Churn Ghose's Lane, and on the west partly by No. 7 Obhoy Churn Ghose's Lane and partly by filled up Municipal sewer ditch.

Lot II.—All that piece or parcel of rent-free tenanted land, containing by estimation 16 cottahs 11 chitaks and 1 square foot, be the same a little more or less, situate, lying at and being No. 56-1 Raja Rajbullubh's Street in Sutanutty in the town of Calcutta, divided into two plots by a filled up Municipal sewer ditch, the southern plot measuring 7 cottahs and 6 chitaks, being bounded on the north by a filled up Municipal sewer ditch, on the east by the premises No. 56 Raja Rajbullubh's Street, on the south by Raja Rajbullubh's Street, and on the west partly by the premises No. 57 Raja Rajbullubh's Street, and partly by the premises No. 58 Raja Rajbullubh's Street, and the northern plot measuring 9 cottahs 5 chitaks and 1 square foot, being bounded on the north and east by the premises No. 55-1 Raja Rajbullubh's Street, and on the south and west by a filled up Municipal sewer ditch.

Lot III.—All that piece or parcel of rent-free tenanted land, measuring 11 cottahs 8 chitaks and 8 square feet situate, lying at and being No. 15 Fakir Chand Chuckerbutty's Lane in Sutanutty in the town of Calcutta, and butted and bounded on the north by a common passage, on the east by the tenanted land of Ananda Lal Mitter, on the south partly by the premises No. 19 Ram Chand Ghose's Lane and partly by the premises No. 20 Ram Chand Ghose's Lane, and on the west by the land and filled up tank of Behary Lal Sen.

Lot IV.—All that undivided half share of and in the upper-roomed brick-built dwelling-house, together with the piece of rent-free land thereunto belonging and on part whereof the same is erected and built, containing by estimation 18 cottahs 10 chitaks and 7 square feet, be the same a little more or less, situate, lying at and being No. 5-1 Raja Rajbullubh's Street in Sutanutty in the town of Calcutta, and butted and bounded on the north partly by the premises No. 3-1 Raja Rajbullubh's Street, partly by the premises No. 5 Raja Rajbullubh's Street, partly by Raja Rajbullubh's Street, partly by the premises No. 6 Raja Rajbullubh's Street, and partly by the premises No. 7 Raja Rajbullubh's Street, on the east partly by the premises No. 6 Raja Rajbullubh's Street, partly by the premises No 7 Raja Rajbullubh's Street, and partly by a filled up Municipal sewer ditch, on the south by a filled up Municipal sewer ditch, and on the west partly by the premises No. 3-1 Raja Rajbullubh's Street, and partly by the premises No 5 Raja Rajbullubh's Street.

The Abstract of Title and Conditions of Sale may be seen at the Registrar's office in the High Court and also at the office of the Hon'ble Babu Bhupendranath Basu, Solicitor, at No. 10 Hastings Street on any day before the sale and will be produced at the sale.

W. R. FINK, Registrar.

Bhupendranath Basu, Plaintiff's Attorney.

Calcutta High Court, Original Side, dated the 25th day of March 1905.

Reissued 5th April 1905. (399—1—261)

Lost or Stolen

A RECEIPT numbered 5750, dated 28th March 1905, and granted by Public Debt Office, Bank of Bengal, on submission of the undermentioned Government Promissory Note. Notice of loss has been given to the Public Debt Office, Bank of Bengal, and the undersigned is about to apply for surrender of the security :—

G. P. Note No.	Loan.	Amount.	Holder's name.
		Rs	
024507	3½ per cent. for 1900-1901.	1,000	Phatik Chandra Roy.

Name of the Proprietor—Phatik Chandra Roy.

Residence—Amta, district Howrah (326—1—260)

Lost.

THE Government Promissory Note No. 048560 of the 3½ per cent. loan of 1854-55 for Rs. 500, originally standing in the name of Haridas Sreemany, and last endorsed to Srimatti Prosonnomoyee Dassee, the proprietress, by whom it was never endorsed to any other person, having been lost, notice is hereby given that payment of the above Note and the interest thereupon have been stopped at the Public Debt Office, Bank of Bengal, Calcutta, and that application is about to be made for the issue of duplicate in favour of the proprietress. The public are cautioned against purchasing or otherwise dealing with the abovementioned security.

Name of the Advertiser—Messrs. B. N. Basu & Co., Attorneys for Srimatti Prosonnomoyee Dassee.

Residence—10 Hastings Street, Calcutta.

(397—3—260)

Dessai and Parbuttia Tea Co., Ld.

NOTICE.

THE Half-yearly Ordinary General Meeting of the Shareholders will be held at the Registered Office of the Company, No. 100 Clive Street, on Friday, the 28th April 1905, at 4 P.M., for the purpose of receiving the Directors' report, passing the accounts for season 1904, and transacting such business as may be brought forward.

Transfer books will be closed from 15th to 30th April inclusive.

By order,
GEO. HENDERSON & Co.,
Secretaries.

Calcutta, the 8th April 1905. (406—2—254)

Estate Henry Binny Webster, Indian Civil Service, deceased.

NOTICE is hereby given that all creditors and other persons having any claims against the estate of the deceased above named are hereby required to send in writing the particulars thereof to Messrs. King, Hamilton & Co., 7 Hare Street, Calcutta, on or before the 10th day of June 1905, after which date the undersigned will distribute the assets of the estate of the said deceased among the parties entitled thereto, having regard to the claims of which he has then had notice.

And notice is hereby further given that the undersigned will not be liable for the assets or any part thereof so distributed to any person of whose claim he shall not have had notice at the time of such distribution.

Dated this 18th day of April 1905.

A. J. KER,
Administrator with Will annexed of the property and credits of the deceased,
7 Hare Street, Calcutta.

(414—3—257)

Estate of the Right Hon'ble Thomas George, Earl of Northbrook, deceased.

NOTICE is hereby given that all creditors and other persons having any claims against the estate of the deceased above named are hereby required to send in writing the particulars thereof to Messrs. King, Hamilton & Co., 7 Hare Street, Calcutta, on or before the 10th day of June 1905, after which date the undersigned will distribute the assets of the estate of the said deceased among the parties entitled thereto, having regard to the claims of which he has then had notice.

And notice is hereby further given that the undersigned will not be liable for the assets or any part thereof so distributed to any person of whose claim he shall not have had notice at the time of such distribution.

Dated this 18th day of April 1905.

A. J. KER,
Administrator with Will annexed of the Property and Credits of the deceased,
7 Hare Street, Calcutta.

(445—3—356)

INSOLVENT NOTICES.

In the matter of MONI LALL SAROWGI, an insolvent.

On Tuesday, the 28th day of February last, it was ordered that the matters of the petition of the said insolvent be heard on Tuesday, the 2nd day of May next, and that the said insolvent do then attend to be examined before the said Court.

S. D. Dutt & Gupta, Attorneys. (424—2)

In the matter of HAR MOOK ROY and others, insolvents.

On Monday, the 20th day of February last, it was ordered that the matters of the petition of the said insolvents be heard on Tuesday, the 2nd day of May next, and that the said insolvents do then attend to be examined before the said Court

S. K. Deb, Attorney. (425—2)

In the matter of ATAL BEHARY BOSE MULLICK, an insolvent.

On Thursday, the 2nd day of March last, it was ordered that the matters of the petition of the said insolvent be heard on Tuesday, the 2nd day of May next, and that the said insolvent do then attend to be examined before the said Court.

B. N. Basu & Co., Attorneys. (426—2)

In the matter of E. H. THOMPSON, an insolvent.

On Tuesday, the 14th day of March last, it was ordered that the matters of the petition of the said insolvent be heard on Tuesday, the 2nd day of May next, and that the said insolvent do then attend to be examined before the said Court.

Insolvent in person. (427—2)

In the matter of GUNGA SHAHAY and others, insolvents

On Tuesday, the 7th day of February last, it was ordered that the matters of the petition of the said insolvents be heard on Tuesday, the 2nd day of May next, and that the said insolvents do then attend to be examined before the said Court.

K. N. De, Attorney. (428—2)

In the matter of MADAN MOHUN, an insolvent.

On Friday, the 24th day of February last, it was ordered that the matters of the petition of the said insolvent be heard on Tuesday, the 2nd day of May next, and that the said insolvent do then attend to be examined before the said Court

J. C. Dutt, Attorney. (429—2)

In the matter of HENRY D'COSTA, an insolvent.

On Monday, the 6th day of March last, it was ordered that the matters of the petition of the said insolvent be heard on Tuesday, the 2nd day of May next, and that the said insolvent do then attend to be examined before the said Court.

Insolvent in person. (430—2)

In the matter of NARENDRANATH DEY, an insolvent.

On Monday, the 6th day of March last, it was ordered that the matters of the petition of the said insolvent be heard on Tuesday, the 2nd day of May next, and that the said insolvent do then attend to be examined before the said Court.

S. D. Dutt & Gupta, Attorneys. (431—2)

In the matter of ALICE MYLNE, an insolvent.

On Friday, the 24th day of February last, it was ordered that the matters of the petition of the said insolvent be heard on Tuesday, the 2nd day of May next, and that the said insolvent do then attend to be examined before the said Court.

Insolvent in person. (432—2)

In the matter of JOHN ROBERT FREDERICK CLAXON, an insolvent.

On Monday, the 20th day of March last, it was ordered that the matters of the petition of the said insolvent be heard on Tuesday, the 2nd day of May next, and that the said insolvent do then attend to be examined before the said Court.

S. C. Basak, Attorney. (433—2)

In the matter of LABH CHAND, an insolvent.

On Tuesday, the 14th day of March last, it was ordered that the matters of the petition of the said insolvent be heard on Tuesday, the 2nd day of May next, and that the said insolvent do then attend to be examined before the said Court.

Suresh Ch. Mukerjee, Attorney. (434—2)

In the matter of WILLIAM HUBERT SAVEDRA, an insolvent.

On Saturday, the 25th day of February last, it was ordered that the matters of the petition of the said insolvent be heard on Tuesday, the 2nd day of May next, and that the said insolvent do then attend to be examined before the said Court.

Insolvent in person (435—2)

In the matter of KANHYA LALL, an insolvent.

On Saturday, the 25th day of February last, it was ordered that the matters of the petition of the said insolvent be heard on Tuesday, the 2nd day of May next, and that the said insolvent do then attend to be examined before the said Court.

J. C. Dutt, Attorney. (436—2)

In the matter of PERO LALL DHUR, an insolvent.

On Wednesday, the 1st day of March last, it was ordered that the matters of the petition of the said insolvent be heard on Tuesday, the 2nd day of May next, and that the said insolvent do then attend to be examined before the said Court.

Insolvent in person. (437—2)

In the matter of J. O. BURRILHON, an insolvent.

On Thursday, the 9th day of March last, it was ordered that the matters of the petition of the said insolvent be heard on Tuesday, the 2nd day of May next, and that the said insolvent do then attend to be examined before the said Court.

Insolvent in person. (438—2)

In the matter of JATINDRA NATH MOOKERJEE, an insolvent

On Tuesday, the 14th day of March last, it was ordered that the matters of the petition of the said insolvent be heard on Tuesday, the 2nd day of May next, and that the said insolvent do then attend to be examined before the said Court.

Bannerjee and Haldar, Attorneys. (439—2)

In the matter of KUMAR KRISHNA MITTER, an insolvent.

On Friday, the 24th day of March last, it was ordered that the matters of the petition of the said insolvent be heard on Tuesday, the 2nd day of May next, and that the said insolvent do then attend to be examined before the said Court.

T. H. Wilson & Co., Attorneys. (440—2)

In the matter of JOHN ROBERT COULTHARD, an insolvent.

On Thursday, the 2nd day of February last, it was ordered that Tuesday, the first Court day in March 1906, be appointed for the further hearing of this matter, and that unless cause be shewn to the contrary on that day the said insolvent be discharged personally as well as to his after acquired property from all liabilities for debts, claims and demands of and against the said insolvent at the time of the filing of his petition for relief.

H. N. Given Wilson, Attorney. (441—2)

In the matter of ALLEN ARTHUR, KT., an insolvent.

On Monday, the 14th day of November last, it was ordered that Tuesday, the 5th day of December next, be appointed for the further hearing of this matter, and that unless cause be shewn to the contrary on that day the said insolvent be discharged personally as well as to his after acquired property from all liabilities for debts, claims and demands of and against the said insolvent at the time of the filing of his petition for relief.

Orr, Robertson and Burton, Attorneys. (442—2)

In the matter of JEWAN RAM LUCHIRAM, insolvents.

On Tuesday, the 4th day of April instant, an account of the receipts and disbursements of the Official Assignee from the 1st day of August 1901 to the 31st day of March last was filed in the Office of the Chief Clerk, and it was ordered that Tuesday, the 2nd day of May next, be appointed for the further hearing of this matter for the purpose of making a dividend.

☞ Any creditor or other person interested who may intend to establish or oppose any claim upon the estate of the said insolvents may attend and be heard, having given notice to the Chief Clerk three clear days before the day of hearing.

A. B. Miller, Official Assignee. (452—1)

In the matter of BHOGODAN BOYD and another, insolvents.

On Tuesday, the 4th day of April instant, an account of the receipts and disbursements of the Official Assignee from the 1st day of August 1897 to the 31st day of March last was filed in the Office of the Chief Clerk, and it was ordered that Tuesday, the 2nd day of May next, be appointed for the further hearing of this matter for the purpose of making a dividend.

☞ Any creditor or other person interested who may intend to establish or oppose any claim upon the estate of the said insolvents may attend and be heard, having given notice to the Chief Clerk three clear days before the day of hearing.

A. B. Miller, Official Assignee. (453—1)

In the matter of H. G. LEWIS PANCHAND, an insolvent.

On Tuesday, the 4th day of April instant, an account of the receipts and disbursements of the Official Assignee from the 21st day of March 1900 to the 31st day of March last was filed in the Office of the Chief Clerk, and it was ordered that Tuesday, the 2nd day of May next, be appointed for the further hearing of this matter for the purpose of making a dividend.

☞ Any creditor or other person interested who may intend to establish or oppose any claim upon the estate of the said insolvent may attend and be heard, having given notice to the Chief Clerk three clear days before the day of hearing

A. B. Miller, Official Assignee (454—1)

In the matter of J. D. NICHOLAS, an insolvent (Kelly & Co.)

On Tuesday, the 4th day of April instant, an account of the receipts and disbursements of the Official Assignee from the 1st day of August 1894 to the 31st day of March last was filed in the Office of the Chief Clerk, and it was ordered that Tuesday, the 2nd day of May next, be appointed for the further hearing of this matter for the purpose of making a dividend.

☞ Any creditor or other person interested who may intend to establish or oppose any claim upon the estate of the said insolvent may attend and be heard, having given notice to the Chief Clerk three clear days before the day of hearing.

A. B. Miller, Official Assignee. (455—1)

In the matter of H. P. RUSTON and others, insolvents (Ruston Brothers).

On Tuesday, the 4th day of April instant, an account of the receipts and disbursements of the Official Assignee from the 1st day of February 1883 to the 31st day of March last was filed in the Office of the Chief Clerk, and it was ordered that Tuesday, the 2nd day of May next, be appointed for the further hearing of this matter for the purpose of making a dividend.

☞ Any creditor or other person interested who may intend to establish or oppose any claim upon the estate of the said insolvents may attend and be heard, having given notice to the Chief Clerk three clear days before the day of hearing

A. B. Miller, Official Assignee. (456—1)

In the matter of SHRODAN MULL and another, insolvents (Sheodan Mull, Chuggan Mull).

On Tuesday, the 4th day of April instant, an account of the receipts and disbursements of the Official Assignee from the 1st day of April 1897 to the 31st day of March last was filed in the Office of the Chief Clerk, and it was ordered that Tuesday, the 2nd day of May next, be appointed for the further hearing of this matter for the purpose of making a dividend.

☞ Any creditor or other person interested who may intend to establish or oppose any claim upon the estate of the said insolvents may attend and be heard, having given notice to the Chief Clerk three clear days before the day of hearing.

A. B. Miller, Official Assignee (457—1)

In the matter of BUCKTWAR CHAND and another, insolvents (Johur Mull, Bucktwar Chand).

On Tuesday, the 4th day of April instant, an account of the receipts and disbursements of the Official Assignee from the 1st day of August 1901 to the 31st day of March last was filed in the Office of the Chief Clerk, and it was ordered that Tuesday, the 2nd day of May next, be appointed for the further hearing of this matter for the purpose of making a dividend.

☞ Any creditor or other person interested who may intend to establish or oppose any claim upon the estate of the said insolvents may attend and be heard, having given notice to the Chief Clerk three clear days before the day of hearing.

A. B. Miller, Official Assignee. (458—1)

In the matter of AKHOY COOMAR MOOKERJEE, an insolvent.

On Tuesday, the 4th day of April instant, an account of the receipts and disbursements of the Official Assignee from the 25th day of April 1902 to the 31st day of March last was filed in the Office of the Chief Clerk, and it was ordered that Tuesday, the 2nd day of May next, be appointed for the further hearing of this matter for the purpose of making a dividend

☞ Any creditor or other person interested who may intend to establish or oppose any claim upon the estate of the said insolvent may attend and be heard, having given notice to the Chief Clerk three clear days before the day of hearing

A. B. Miller, Official Assignee. (459—1)

In the matter of ATAL BEHARY BOSE MULLICK, residing at No. 11 Modhu Roy's Lane, Simla, in the town of Calcutta, now without any employment and lately carrying on business at No. 77-3 Clive Street, in Calcutta aforesaid, in co-partnership with Nanda Lal Ghose, under the name and style of A. B. Mullick & Co, as suppliers of cargo boats, an insolvent.

Notice that the petition of the said insolvent seeking the benefit of the Act XI Vic., Chapter XXI, was filed in the Office of the Chief Clerk on Thursday, the 2nd day of March last, and by an order of the same date the estate and effects of the said insolvent were vested in the Official Assignee.

B. N. Bose & Co., Attorneys. (460—1)

In the matter of NOBENDRO NATH DEY, of No. 28 Rutto Sircar's Lane, in Calcutta, a godown sircar in the employ of Messrs Ralli Brothers, an insolvent.

Notice that the petition of the said insolvent seeking the benefit of the Act XI Vic, Chapter XXI, was filed in the Office of the Chief Clerk on Monday, the 6th day of March last, and by an order of the same date the estate and effects of the said insolvent were vested in the Official Assignee.

S. D. Dutt & Gupta, Attorneys. (461—1)

In the matter of MONI LALL SABOWOI, of No. 31-2 Baranossy Ghose's Street, Calcutta, lately carried on a nursery business under the name and style of Edward Nursery, at No 31-1 Chowringhee Road, Calcutta, now a stock-broker, an insolvent.

Notice that the petition of the said insolvent seeking the benefit of the Act XI Vic, Chapter XXI, was filed in the Office of the Chief Clerk on Tuesday, the 28th day of February last, and by an order of the same date the estate and effects of the said insolvent were vested in the Official Assignee.

S. D. Dutt & Gupta, Attorneys. (462—1)

In the matter of HARMOOK ROY, RAMKISSEN DASS, son of the said Harmook Roy, and NURSIRO DASS, son of the said Ramkissen Dass, all of them lately carrying on business in co-partnership as piece-goods merchants under the name and style of Harmook Roy, Nursing Dass at No. 91 Cross Street, Calcutta, now without any occupation, and who are members of Hindu joint-family governed by Mitakshara Law, insolvents.

Notice that the petition of the said insolvents seeking the benefit of the Act XI Vic., Chapter XXI, was filed in the Office of the Chief Clerk on Monday, the 20th day of February last, and by an order of the same date the estate and effects of the said insolvents were vested in the Official Assignee.

S. K. Deb, Attorney. (463—1)

In the matter of GUNGA SHAHYA and SOONDERMULL, the son of the said Gunga Shahya, both residing at No. 18 Hanspooker Lane, in Burrabazar, in the town of Calcutta, and both lately carried on business together as merchant and commission agent at No 71 Burtolla Street, in Burrabazar, in the town of Calcutta, under the name, style and firm of Gunga Shahya Sundermull, at present having no occupation. The said insolvents are the members of Hindu joint-family governed by Mitakshara Law, insolvents

Notice that the petition of the said insolvents seeking the benefit of the Act XI Vic., Chapter XXI, was filed in the Office of the Chief Clerk on Tuesday, the 7th day of February last, and by an order of the same date the estate and effects of the said insolvents were vested in the Official Assignee.

K. N. De, Attorney. (464—1)

In the matter of KUMAR KRISHNA MITTER, of No. 14 Ahiritolla Street, in the town of Calcutta, lately carrying on business as a baker and flour-dealer, in co-partnership with Jeebun Krishna Banerjee, of Purulia, in the Central Provinces and at the above address, under the name and style of the Edward Bakery and also an assistant in the firm of Messrs. John Dawson & Co., of No. 10 New China Bazar Street, Calcutta, an insolvent.

Notice that the petition of the said insolvent seeking the benefit of the Act XI Vic., Chapter XXI, was filed in the Office of the Chief Clerk on Friday, the 24th day of March last, and by an order of the same date the estate and effects of the said insolvent were vested in the Official Assignee.

T. H. Wilson & Co., Attorneys. (465—1)

In the matter of JOTINDRA NATH MOOKERJEE, residing at No. 1-2 Gour Laha's Street, in Calcutta, an insolvent.

Notice that the petition of the said insolvent seeking the benefit of the Act XI Vic., Chapter XXI, was filed in the Office of the Chief Clerk on Tuesday, the 14th day of March last, and by an order of the same date the estate and effects of the said insolvent were vested in the Official Assignee.

Bannerjee & Haldar, Attorneys. (466—1)

In the matter of J. O. BURRILHON, residing at No. 41 Strand Road, in the town of Calcutta, an assistant in the firm of Messrs. J. Burrilhon & Co., an insolvent.

Notice that the petition of the said insolvent seeking the benefit of the Act XI Vic., Chapter XXI, was filed in the Office of the Chief Clerk on Thursday, the 9th day of March last, and by an order of the same date the estate and effects of the said insolvent were vested in the Official Assignee.

Insolvent in person. (467—1)

In the matter of PREO LALL DHUR, residing at No 31 College Street, in the town of Calcutta, formerly carrying on business as a dealer in hosiery, etc, at No. 95-1 Old China Bazar Street, in Calcutta, under the name, style and firm of Preo Lall Dhur, and since the 6th day of January 1905 serving as a clerk in the employ of Port Commissioners' Office at Calcutta, an insolvent.

Notice that the petition of the said insolvent seeking the benefit of the Act XI Vic., Chapter XXI, was filed in the Office of the Chief Clerk on Wednesday, the 1st day of March last, and by an order of the same date the estate and effects of the said insolvent were vested in the Official Assignee.

Insolvent in person. (468—1)

In the matter of KANHYA LALL, residing at No. 8 Sikdarpara Lane, in the town of Calcutta, lately carrying on business in piece-goods in his own account under the name and style of Kanhya Lall Muddan Mohun and also in co-partnership with Luchmon Das and Girdhari Gopal, under the name and style of Girdhari Gopal, but now a gomastah in the employ of Girdhari Gopal, an insolvent.

Notice that the petition of the said insolvent seeking the benefit of the Act XI Vic., Chapter XXI, was filed in the Office of the Chief Clerk on Saturday, the 25th day of February last, and by an order of the same date the estate and effects of the said insolvent were vested in the Official Assignee.

J. C. Dutt, Attorney. (469—1)

In the matter of WILLIAM HUBERT SAVEDRA, residing at No. 14 Park Lane, in the town of Calcutta, and employed as a shorthand clerk in the Calcutta Tramways Company, Limited, an insolvent.

Notice that the petition of the said insolvent seeking the benefit of the Act XI Vic., Chapter XXI, was filed in the Office of the Chief Clerk on Saturday, the 25th day of February last, and by an order of the same date the estate and effects of the said insolvent were vested in the Official Assignee.

Insolvent in person. (470—1)

In the matter of LADHCHAND, of Bidasur, in Bikaneer State, at present residing at No. 65-3 Cross Street, in the town of Calcutta, an insolvent.

Notice that the petition of the said insolvent seeking the benefit of the Act XI Vic., Chapter XXI, was filed in the Office of the Chief Clerk on Tuesday, the 14th day of March last, and by an order of the same date the estate and effects of the said insolvent were vested in the Official Assignee.

Suresh Chunder Mukerjee, Attorney. (471—1)

In the matter of JOHN ROBERT FREDERICK CLAXSON, a constable in the Calcutta Reserve force, residing at No. 18 Lal Bazar, Calcutta, an insolvent.

Notice that the petition of the said insolvent seeking the benefit of the Act XI Vic., Chapter XXI, was filed in the Office of the Chief Clerk on Monday, the 20th day of March last, and by an order of the same date the estate and effects of the said insolvent were vested in the Official Assignee.

S. C. Basak, Attorney. (472—1)

In the matter of ALICE MYLNE, residing at No. 27 McLeod Street in the town of Calcutta, spinster, an insolvent.

Notice that the petition of the said insolvent seeking the benefit of the Act XI Vic., Chapter XXI, was filed in the Office of the Chief Clerk on Friday, the 24th day of February last, and by an order of the same date the estate and effects of the said insolvent were vested in the Official Assignee.

Insolvent in person. (473—1)

In the matter of HENRY D'COSTA, residing at No. 196 Bowbazar Street in the town of Calcutta, lately carrying on business as a sub-contractor in the office of the Indian Patent Stone Company, Limited, at Balliaghatta in Calcutta under the name of H. D'Costa, and at present of no occupation, an insolvent.

Notice that the petition of the said insolvent seeking the benefit of the Act XI Vic., Chapter XXI, was filed in the Office of the Chief Clerk on Monday, the 6th day of March last, and by an order of the same date the estate and effects of the said insolvent were vested in the Official Assignee.

Insolvent in person. (474—1)

In the matter of MADAN MOHUN, residing at No. 8 Sikdarpara Lane, in the town of Calcutta, at present without any employment, an insolvent.

Notice that the petition of the said insolvent seeking the benefit of the Act XI Vic., Chapter XXI, was filed in the Office of the Chief Clerk on Friday, the 24th day of February last, and by an order of the same date the estate and effects of the said insolvent were vested in the Official Assignee.

J. C. Dutt, Attorney. (475—1)

In the matter of ERNEST HANNAMELL THOMPSON, residing at Asansol, in the district of Raneegunge, and serving as a guard in the East Indian Railway at Asansol, a European British subject, an insolvent.

Notice that the petition of the said insolvent seeking the benefit of the Act XI Vic., Chapter XXI, was filed in the Office of the Chief Clerk on Tuesday, the 14th day of February last, and by an order of the same date the estate and effects of the said insolvent were vested in the Official Assignee.

Insolvent in person. (476—1)

In the matter of SATISH CHUNDER BOSE and SARAT CHUNDER BOSE, insolvents.

On Thursday, the 23rd day of March last, it was ordered that this matter be specially set down for hearing on Tuesday, the 2nd day of May next, with liberty to the said insolvents at the said hearing to apply that the order of adjudication dated the 30th day of June 1902 be set aside and the adjudication vesting order made thereon be discharged.

A. K. Thakur, Attorney.
Moni Lal Sen, Attorney. (477—1)

Insolvency Notice.

NOTICE is hereby given that the undermentioned dividends are lying unclaimed:—

Estate Eugene Allan LeFranc, 3rd insolvency, an insolvent.

Nos.	Names of creditors.	Amount of claim.	2nd dividend, at Re. 8 per cent.
		Rs. A. P.	Rs. A. P.
1	Mrs. A. M. Bredee, Executrix, Estate G. A. Robertson, deceased.	2,104 0 0	168 5 1
2	Ahpoorva Coomaree Dasee ...	2,415 0 0	193 3 2

Estate William Gordon Lynch Cotton, an insolvent.

			1st dividend at Re. 4-10 per cent.
		Rs. A. P.	Rs. A. P.
3	Hookum Chand Bold ...	1,185 0 0	54 12 11
6	Nawab Keramutho Dowlah Bahadoor.	3,200 0 0	153 6 5
7	Rai Amrita Nath Mitter Bahadoor and Sreemutty Madhubmoni Dasee, Administrator and Administratrix to the Estate of Dwarka Nath Mitter, deceased.	5,336 9 3	247 11 10
11	I. M. Lucas, Executor to the Estate of T. Lucas, deceased.	5,000 0 0	231 4 0

Estate Sundermull and others, insolvents.

			1st dividend at Re. 20 per cent.
		Rs. A. P.	Rs. A. P.
3	Udoyram Tuneerokroy ...	1,334 6 0	266 14 6
7	Munsook Dass Heeralal ...	704 10 9	140 14 11
8	Choutmull Loonkaran ...	373 3 8	75 10 4
11	Bookmanund Bridhichand ...	1,069 0 0	213 12 10
26	Choontlal Bheemraj ...	269 7 0	53 14 2
43	Harnook Rai Ramchunder ...	500 0 0	100 0 0
46	Jindaram Ghoneshara Dass ...	200 0 0	40 0 0
47	Hazareemull Goormook Roy ...	600 0 0	120 0 0
52	Hazareemull Sirdarmull ...	200 0 0	40 0 0
53	Teloke Chand Neem Chand ...	600 0 0	120 0 0
3	Luchmichand Sewdutt Rai ...	619 4 3	123 13 1
5	Khetsidass Sudasook ...	286 12 6	57 12 1
10	Hazareemull Heralal ...	400 0 0	80 0 0
13	Hazareemull Sirdarmull ...	2,073 4 3	394 10 5
19	Ramjas Rai Asamram ...	800 0 0	160 0 0
27	Raichand Parruck ...	1,408 9 0	281 11 5
29	Surajmull Prithiraj ...	700 0 0	138 0 0
31	Sautlal Mungiechand ...	500 0 0	100 0 0

A. B. MILLER, Official Assignee.

Calcutta, the 19th April 1905. (450—1)

CALCUTTA POST OFFICE NOTICE.

Mails for—	Date and hour of closing at the General Post Office, Calcutta	Route by which despatched.
United Kingdom, Aden, Egypt, Europe, America, West Africa *vid* United Kingdom and East Africa *vid* Aden (and also South Africa, if superscribed on the cover *vid* United Kingdom or Aden).	1905. Apl. 27 At 6 30 P.M.	Per P. & O. steamer from Bombay.
Parcels and money-orders for the United Kingdom and other Foreign places.	„ 26 Parcels, 5 P.M.; M.-O., 4 P.M.	Ditto ditto.
* Australasian Colonies ...	May 1 At 7-30	*Vid* Tuticorin and Colombo.*
† Straits Settlements (also China and Japan, if the Steamer's name is superscribed on the cover).	Apl. 28 „ 8 30	Per steamer *G. Apcar.*
Burma ..	„ 27 „ 7-30	Per B. I. S. N. Co.'s steamer.
Burma, Penang and Singapore.	„ 29 „ 7-30	
Akyab, Kyaukpyu and Sandoway.	„ 29 „ 7-30	
Burma, Tavoy and Mergui ..	May 1 „ 7-30	

* Although the date entered in column 2 is, as far as can be calculated, the latest safe date of posting for the next Mail steamer, full allowance being made for the steamer being in advance of her published timing, Mails for the places mentioned in column 1 are despatched daily to Tuticorin, so that they may proceed by any steamer from Colombo that has been unusually accelerated or retarded, or by any special opportunity that may be afforded by a steamer not belonging to one of the regular lines.

† Correspondence for China and Japan is despatched daily to Tuticorin, so that it may proceed by the first steamer from Colombo.

1. The letter-box for Inland articles will be cleared for the forenoon Mails at the following hours:—

For Goalundo, Arakan and Chittagong, at 5-45 A.M.

For Midnapore and Orissa districts, at 9 A.M.

For the Eastern districts, as far as Dacca and Mymensingh, at 6-15 A.M.

For Khulna and Jessore districts, at 7 A.M.

For Bombay, Central Provinces and Midnapore *vid* Bengal-Nagpur Railway, at 11-15 A.M., and with a late fee of ½ anna up to 11-40 A.M.

2. The letter-box will be cleared for the evening Mails at the following hours, viz.—

For the East Indian Railway Loop Mail, at 2-30 P.M., and with a late fee of ½ anna up to 2-56 P.M.

For the Northern Bengal, Darjeeling and Assam Mails, at 3-25 P.M., and with a late fee of ½ anna up to 3-50 P.M.

For the Bombay Mail *vid* Jubbulpore, at 6 P.M., and with a late fee of ½ anna up to 6-30 P.M.

For the Punjab Mail, at 7-30 P.M.
For Midnapore, Orissa, Madras Presidency and Ceylon, at 7-30 P.M.
For the Khulna Mail, at 7-30 P.M.
For the Eastern Bengal Mail, Darjeeling, and places on the Darjeeling Himalayan Railway, at 7-30 P.M.

} and with a late fee of ½ anna up to 8 P.M. and with a late fee of 1 anna up to 8-45 P.M.

3. Late registered letters will be received between the following hours:—

For the Bombay Mail *vid* Jubbulpore, from 5 P.M. to 6-15 P.M.
For the Punjab Mail, from 6 P.M. to 7 P.M.
For the Eastern Bengal Mail, from 6 P.M. to 7 P.M.
For the Khulna Mail, from 6 P.M. to 7 P.M.
For Midnapore, Orissa, Madras Presidency and Ceylon, from 6 P.M. to 7 P.M.

NOTE.—The late fee on each registered letter will be 2 annas, which must be prepaid in stamps on the letter.

4. Articles for Burma and for Port Blair by sea are received without late fee up to 7-30 P.M., and with a late fee of ½ anna up to 8 P.M.

5. On the latest safe day of despatch of Mails for the Australasian Colonies, or any other Foreign Countries, *viâ* Madras or Tuticorin, the letter-box for Foreign articles will be cleared for the last time at 7-30 P.M., and late letters and papers fully prepaid will be received up to 8-45 P.M.

6. On the day of despatch of the Mail for Europe (Thursday) the letter-box for Foreign articles will be cleared for the last time for articles, without the late fee, at 6-30 P.M., and late letters and papers fully prepaid will be received up to 6-45 P.M. Late registered articles will be received from 5 to 6 P.M. On the day of despatch of any Foreign Mail by sea, the letter-box will be cleared for the last time, without the late fee, up to 8-30 P.M., and late letters and papers up to 9 P.M. The late fee for Foreign articles is 4 annas, which must be prepaid in stamps affixed to the articles.

CALCUTTA G. P. O., *The 24th April 1905.* } JOHN OWENS, *Presidency Postmaster.*

Nadia Rivers.

Report showing the least depths of water for the week ending Friday, the 21st April 1905.

Name of River.	Reach of River.	Least depth of water sounded.	Remarks.
		Ft. in.	
Bhagirathi.	Entrance from Ganges	1 4	
	Thence to Gerish	1 6	Momintola.
	From Gerish to Jangipur	1 3	A'amper.
	„ Jangipur to Berhampore	1 0	Ganga Prasad.
	„ Berhampore to Katwa	1 6	Bhootghat.
	„ Katwa to Nadia	3 6	Barati.
Bhairab-Jalangi.	Entrance from Ganges	3 6	
	Thence to Akriganj	3 6	Khamardiar.
	Akriganj to junction of the Bhairab and Jalangi	3 6	Deboipur.
	Thence to Patkabari	3 3	Lalmaghar.
	Patkabari to Nadia	3 6	Bhabebnaghar
Mathabhanga.	Entrance from Ganges	6 3	
	Thence to Dewanganj	6 3	Jamalpur.
	From Dewanganj to Shikarpur	6 6	Hakara.
	„ Shikarpur to Boalia	1 9	Kharal
	„ Boalia to Chandanga	1 9	Muhammadpur.
	„ Chandanga to Kismanganj and Hanskhali	4 9	Taltala.

Gauge Readings.

	Locality.	Date.	Hour.	Height above zero.	Height above mean sea-level.	Remarks.
			A.M.	Ft.	Ft.	
Ganges	Sahibganj	19-4-1905	6	...	69 00	Fall.
	Rampur Hoalia	21-4-1905	Noon	6'30	45'36	Do.
	Entrance of Bhagirathi Gerish	22-4-1905	A.M. 7	3'05	41'91	Steady.
	Entrance of Bhairab-Jalangi Akriganj	22-4-1905	7	6'15	38 11	Do.
	Entrance of Mathabhanga	...	...	...	...	...
Bhagirathi.	Jangipur	20-4-1905	A.M. 6	19'72	46'23	Fall.
	Berhampore	20-4-1905	7	2'02	29'77	Do.
	Katwa	21-4-1905	P.M. 5	4'30	19'16	Do.
Jalangi	Krishnagar	21-4-1905	..	'39	...	...
	Sarappagan	13-4-1905	Noon 12	6'40	6'40	Rise.
Mathabhanga.	Hanskhali	20-4-1905	P.M. 4	5'25	16'39	Steady

A. K BANERJI, Accountant,
for *Exe. Engr., Nadia Rivers Division.*

Berhampore, the 21th April 1905.

THE INDIAN LAW REPORTS.

Published in FOUR SERIES, viz.:

CALCUTTA, MADRAS, BOMBAY AND ALLAHABAD.

THE Indian Law Reports, published under the authority of the Governor General in Council, are printed in monthly Parts, which are issued, as soon as possible after the first of each month, at Calcutta, Madras, Bombay and Allahabad, respectively.

The Reports comprise four Series—one for the Calcutta High Court, a second for the Madras High Court, a third for the Bombay High Court, and a fourth for the Allahabad High Court.

The cases heard by the Privy Council on appeal from each High Court are reported in the Series for that High Court. Cases heard by the Privy Council on appeal from Provinces in India not subject to any High Court are reported in the Calcutta Series.

The Calcutta Series is distributed by the Bengal Secretariat Book Depôt; and the Madras, Bombay and Allahabad Series are distributed direct from Madras, Bombay and Allahabad, respectively.

Persons desiring to subscribe for or purchase the Reports should apply to—

the Officer in charge, Bengal Secretariat Book Depôt, Calcutta,

or

the Superintendent, Government Press, Madras, or

the Superintendent, Government Central Press, Bombay, or

the Curator of Government Books, United Provinces of Agra and Oudh, Allahabad.

PRICES.

THE terms of subscription, and the terms on which current issues and back numbers are sold, are as follows:—

	Without postage.	With Indian postage.	With Foreign postage.
	Rs. A. P.	Rs. A. P.	Rs. A. P.
COMPLETE SERIES—			
Current issues, per annum	.....	22 8 0	28 0
Back numbers, per annum	20 0 0	22 8 0	28 0 0
CALCUTTA SERIES—			
Current issues or back numbers, per annum ..	10 0 0	12 8 0	14 0 0
MADRAS, BOMBAY or ALLAHABAD SERIES—			
Current issues or back numbers, per annum ...	6 0 0	7 8 0	8 0 0
ANY MONTHLY PART—			
Calcutta Series	2 0 0	2 8 0	2 0 0
Madras Bombay or Allahabad Series	1 0 0	1 0 0	1 0 0

All payments must be made in advance. Remittances to Calcutta should be addressed to the TREASURER, BENGAL SECRETARIAT, *Writers' Buildings, Calcutta*

PARTS OUT OF STOCK AND DUPLICATE COPIES.

WHEN a requisition is received for any set of the Reports, and any Parts are out of stock, the following deduction from the foregoing rates is made for such Parts:—

	Without postage.	With Indian postage.
	Rs. A. P.	Rs. A. P.
CALCUTTA SERIES—		
All Parts for one year	7 2 6	8 6 3
Any one Part	0 8 9	0 10 3
MADRAS, BOMBAY or ALLAHABAD SERIES—		
All Parts for one year	4 4 6	4 11 3
Any one Part	0 5 3	0 5 9

If any Part is lost in transit to a subscriber, and the fact is reported to the Office of distribution within three months from the date of publication, a duplicate will be supplied at the following rate:—

	Without postage.	With Indian postage.
	Rs. A. P.	Rs. A. P.
CALCUTTA SERIES	0 8 9	0 10 3
MADRAS, BOMBAY or ALLAHABAD SERIES	0 5 3	0 5 9

REPRINTS.

THE Complete Series for the years 1876 to 1881, 1883, 1886, 1888, 1890, 1892 to 1895 and 1899 to 1903 has been reprinted, and may be purchased at the Bengal Secretariat Book Depôt, Calcutta, either wholly or in part. All Parts required to complete the stock of the Reports for other years are now being reprinted. Complete Reports from the beginning to date will therefore shortly be available at the Bengal Secretariat Book Depôt.

ADVERTISEMENTS FOR THE CALCUTTA SERIES.

ADVERTISEMENTS of law publications only are received. Rates can be ascertained on application to the Bengal Secretariat Book Depôt.

THE BENGAL LAW REPORTS.

SEVERAL volumes of the Bengal Law Reports from August 1868 to December 1876, and Full Bench Rulings, Parts I and II, are available at the Bengal Secretariat Book Depôt, Calcutta, at the following rates:—

	Without postage.	With Indian postage.
	Rs. A. P.	Rs. A. P.
BENGAL LAW REPORTS, for one year ...	20 0 0	22 8 0
Single copies, each	2 0 0	2 0 0
FULL BENCH RULINGS Part I and II ...	20 0 0	22 8 0

Pure Sulphate of Quinine and Sulphate of Cinchonidine.

MANUFACTURED AT THE BENGAL GOVERNMENT CINCHONA PLANTATION.

FROM 1st April 1905 the price of these articles will be as follows:—

Quinine.

1	Pound tin,	Rs.	16,	or,	post	free,	Rs.	16-8.
½	,,	,,	,,	8	,,	,,	,,	8-6.
¼	,,	,,	,,	4	,,	,,	,,	4-6.

Cinchonidine.

1	Pound tin,	Rs.	12,	or,	post	free,	Rs.	12-8.
½	,,	,,	,,	6	,,	,,	,,	6-6.
¼	,,	,,	,,	3	,,	,,	,,	3-6.

Analysis shows these articles to be of the purest manufacture; and they are guaranteed to be free from wilful admixture with the inferior alkaloids. They are for sale only to Government officers, and only for cash, and may be had from the Superintendent, Botanic Garden, Sibpur, near Calcutta. Cinchonidine can also be purchased by dealers at the following rates:—

1	Pound tin,	Rs.	16,	or,	post	free,	Rs.	16-8.
½	,,	,,	,,	8	,,	,,	,,	8-6.
¼	,,	,,	,,	4	,,	,,	,,	4-4.

Cinchona Febrifuge.

Cinchona Febrifuge can be purchased by all Government officers and by any one taking *five pounds* and upwards at a time from the Superintendent, Botanic Garden, Calcutta, at the following rates—per four-ounce tin, Re. 1 ans. 14; per eight-ounce tin, Rs. 3 ans. 12; per pound tin, Rs. 7 ans. 8; the general public can be supplied by the Superintendent, Botanic Garden, *for cash only*, at the undernoted rates—per four-ounce tin, Rs. 2 ans. 4; per eight-ounce tin, Rs 4 ans. 8; per pound tin, Rs. 9. This medicine is also sold by the principal European and Native druggists in Calcutta. Postage, four annas per four-ounce tin; six annas per eight-ounce tin; and eight annas per pound tin, in addition to the foregoing rates.

THE CALCUTTA GAZETTE.

The 1st March 1901.—From this date the subscription to, and postage for, the *Calcutta Gazette* will be at the following rates, payable in advance:—

PER ANNUM.	For Calcutta.	For the Mofussil including postage.
	Rs. A.	Rs. A.
Entire *Gazette*	15 0	20 0
Parts I, Ia and Ib together ...	5 0	7 8
Part II	1 0	2 12
Parts III, IV and IVa together	4 0	6 0
,, V and VI together ..	2 0	3 0
Appendix (Marine Notifications)	1 0	2 12
Supplement	5 0	7 8
PER ISSUE.		
Entire *Gazette*	0 3	0 10
Supplement	0 4	0 5

N. B.—Separate Parts of each issue of the *Gazette*, and occasionally important Rules and Extracts, can be obtained from the Officer in charge, Bengal Secretariat Book Depôt, at the rate of one anna for every sixteen pages or a fraction thereof. Postage according to weight.

RATES FOR ADVERTISEMENTS in the *Calcutta Gazette*:—

Full page, per issue	Rs 20
Half ,, ,, ,, ...	,, 10

Casual advertisements, 4 annas per line per insertion.

Parts I, II, and III of a Descriptive Catalogue of the Sanskrit Manuscripts in the Library of the Calcutta Sanskrit College, prepared by Pandit Hrishikesa Sastri and Babu Siva Chandra Bhattacharya, M.A., B.L., of that College, are offered to the public for sale. The Catalogue is to be completed in 23 parts, the price of each part being 12 annas a copy, exclusive of postage. Copies can be obtained from the Principal of the Sanskrit College, Calcutta.

GOVERNMENT PUBLICATIONS FOR SALE

At the Bengal Secretariat Book Depôt, Writers' Buildings, Calcutta, and by the following Agents :—

AGENTS IN INDIA.

Messrs. Thacker, Spink & Co., Calcutta and Simla.
Messrs. Newman & Co., Calcutta.
Messrs Higginbotham & Co., Madras.
Messrs. Thacker & Co., Ld., Bombay
Messrs. A. J. Combridge & Co., Bombay.
The Superintendent, American Baptist Mission Press, Rangoon.
Mrs. Radhabai Atmaram Sagoon, Bombay.
Messrs. R. Cambray & Co., Calcutta.
Rai Sahib M. Gulab Singh & Sons, Proprietors of the Mufid-i-am Press, Lahore, Punjab.
Messrs. S. K. Lahiri & Co., Printers and Booksellers, College Street, Calcutta.
Messrs. V. Kalyanarama Iyer & Co., Booksellers, &c., Madras.
Messrs. D. B. Taraporevala, Sons & Co., Booksellers, Bombay.
Messrs. G. A. Natesan & Co., Madras.
Mr. N. B. Mathur, Superintendent, Nazair Kanum Hind Press, Allahabad.
The Calcutta School Book Society.

AGENTS IN ENGLAND.

Mr. E. A. Arnold, 41 and 43 Maddox Street, Bond Street, London, W.
Messrs. Constable & Co., 16 James Street, Hay Market, London, W
Messrs. Kegan Paul, Trench, Trübner & Co., Charing Cross Road, London.
Mr. B. Alfred Quaritch, 15 Piccadilly, London.
Messrs. P S. King & Son, 2 & 4 Great Smith Street, Westminster, London.
Messrs. H. S. King & Co., 65 Cornhill, London
Mr. B. H. Blackwell, 50-51, Broad Street, Oxford.
Messrs. Deighton Bell & Co., Cambridge.

AGENTS ON THE CONTINENT.

Messrs. R. Friedländer & Sohn, Berlin, N. W. Carlstrasse, 11.
Mr. Otto Harrassowitz, Leipzig.
Mr. Karl Hiersemann, Leipzig.
Mr. Ernest Leroux, 28 Rue Bonaparte, Paris.
Mr. Martinus Nijhoff, The Hague

NOTICE.—Books required for private use can be purchased. Applications should be accompanied by remittance in each case.

All remittances on account of subscriptions to, or prices of, Gazettes, Indian Law Reports or other Government publications available for sale at the Bengal Secretariat Book Depôt, or for cost of advertisements published in the Gazettes should, in future, be made payable to the "Treasurer, Bengal Secretariat, Calcutta." Advices of such remittances, if separately sent, should be addressed to the "Accountant, Bengal Secretariat." All advertisements intended for publication in the *Calcutta* or *Bengali Gazette* should be sent direct to the Superintendent, Government Printing, Bengal.

Books required for the Public Service should be obtained through the Heads of Departments.

☞ *The amounts within parentheses are for packing and postage.*

NEW PUBLICATIONS ISSUED DURING THE CURRENT QUARTER.

APPOINTMENT DEPARTMENT.

Quarterly Civil List for Bengal, corrected up to 1st April 1905. Re. 1. (4s.)

LEGISLATIVE DEPARTMENT.

The Indian Railway Boards Act (Act IV of 1905) in Bengali or Hindi. 6p. (1s.)

REVENUE DEPARTMENT.

A Monograph on Gold and Silver Work in the Bengal Presidency. By D. N. Mookherjee, Assistant Director, Land Records and Agriculture. F'cap. Paper cover. Re. 1-8. (2s.)
Annual Report on the Survey Operations in Bengal during the year 1903-04. F'cap. Paper cover. Re. 1 (2s.).
Annual Progress Report on Forest Administration in the Lower Provinces of Bengal for the year 1903-04. F'cap. Paper cover. Re. 1-4 (2s.).
Annual Report of the Director of the Department of Land Records and Agriculture, Bengal, on Settlements and Land Records for the year ending 30th September 1904. F'cap. Paper cover. As. 8 (2s.).
An account of the Research work in Indigo carried out at Dalsing Sarai Research Station (under subsidy of the Government of Bengal) from 1903 to March 1904, by W. Popplewell Bloxam and H. M Leake. F'cap., boards. Paper cover. Re. 1 (4s.)

NEW PUBLICATIONS ISSUED BETWEEN 1ST OCTOBER 1904 AND THE 31ST MARCH 1905.

APPOINTMENT DEPARTMENT.

Quarterly Civil List of Bengal. corrected up to 1st January 1905. Re. 1. (4s.)

FINANCIAL DEPARTMENT.

Report on the Road and Public Works Cess Operations of the Lower Provinces for the official year 1903-04. F'cap. Paper cover. Re. 1. (2s.)
Report on the Administration of the Excise Department in the Lower Provinces of Bengal for the year 1903-04. F'cap. Paper cover. Re. 1. (2s.)

GENERAL DEPARTMENT.

Report on Inland Emigration during the year ending 30th June 1904. F'cap. Paper cover. As. 8. (1s.)

General Report on Public Instruction in Bengal for 1903-04. F'cap. Paper. Re. 1-5-3. (2s.)

List of Officers in the Subordinate Educational Service, Bengal, corrected up to 1st January 1905. As. 8. (1s.)

Bengal Administration Report, 1903-04. F'cap. Cloth. Rs. 3. (6s.)

JUDICIAL DEPARTMENT.

Annual Report on the Police Administration of the Town of Calcutta and its suburbs for the year 1903. F'cap. Paper cover. Re. 1. (2s.)

LEGISLATIVE DEPARTMENT.

The Chota Nagpur Landlord and Tenant Procedure Act (Bengal Act I of 1879, modified) with notes by H. W. C. Carnduff. Re. 1-8. (2s.)

Indian Emigration Act (Amendment) (Act XII of 1904) in Bengali, Hindi or Uriya. 6p. (1s.)

The Indian Stamp Act (Act XV of 1904), in Bengali, Hindi or Uriya. 1s. (1s.)

The Local Authorities Loans Act (Act I of 1905) in Bengali or Hindi. 6p. (1s.)

The Indian Universities Validation Act (Act II of 1905) in Bengali or Hindi. 6p. (1s.)

The Stage Carriages Act (Act XVI of 1861), as modified up to 1st February 1898, in Hindi. As 3. (1s.)

The Indian Evidence Act (Act I of 1872) as modified up to 1st November 1902, in Hindi. As. 14 (1s.)

The Indian Explosives Act (Act IV of 1884) as modified up to 1st December 1884, in Hindi. As. 2. (1s.)

The Bengal Tenancy Act (Act VIII of 1885) as modified up to 1st December 1903, in Uriya. Re. 1 (2s.)

The Indian Railway Act (Act IX of 1890) as modified up to 1st May 1896 and corrected up to the 1st December 1903, in Hindi. As. 13. (1s.)

MUNICIPAL DEPARTMENT.

List of qualified Medical Practitioners in Bengal, 1904. Royal 8vo. Boards. Paper cover. Re. 1. (2s.)

Resolution reviewing the working of Municipalities in Bengal during the year 1903-04. F'cap. Paper cover. Re. 1. (2s.)

Resolution reviewing the Reports on the working of District Boards in Bengal during the year 1903-04. F'cap. Paper cover. Re. 1. (1s.)

PUBLIC WORKS DEPARTMENT.

Conditions under which Electric Meters and other instruments will be accepted for testing in the Government Electrical Laboratory, Calcutta, and Table of Fees. F'cap. Paper cover. 1s. (1s.)

Revenue Report of the Government of Bengal, Public Works Department, Irrigation Branch, for the year 1903-04. F'cap. Boards. Paper cover. Rs. 2. (3s.)

Classified List and Distribution Return of Establishment of the Public Works Department, Bengal, corrected up to 31st December 1904. Rs. 4. (2s.)

Resolution on the Embankment and Drainage Reports of the Government of Bengal, Irrigation Department, for the year 1903-04. F'cap. Boards. Paper cover. Re. 1. (2s.)

REVENUE DEPARTMENT.

Annual Report on the Survey Operations in Bengal during 1903-04 (from October 1903 to September 1904). F'cap. Paper cover. Re. 1. (2s.)

Final Report on the Survey and Settlement Operations in the Saran District, 1893 to 1901, by J. H. Kerr, Esq., Settlement Officer, North Bihar. F'cap. Boards, paper cover. Rs. 4-8. (6s.)

Final Report on the Survey and Settlement Operations in the Darbhanga District, 1896 to 1903, by J. H. Kerr, Esq. F'cap. Boards, paper cover. Rs. 6. (5s.)

Abstract of the Indian Factories Act, 1881, in sheet form, for hanging up in Factories. In English and Hindi and Urdu. As. 4. (1s.) unmounted. Re. 1-4 mounted

Agricultural Statistics of the Lower Provinces of Bengal for 1903-04. F'cap. Paper cover. As. 8. (1s.)

Report on Wards and attached Estates in the Lower Provinces for the year 1903-04. F'cap. Paper cover. Re. 1-8. (2s.)

Report on the Land Revenue Administration of the Lower Provinces for the year 1903-04. F'cap. Paper cover. Rs. 3. (2s.)

STATISTICAL DEPARTMENT.

The Trade of Bengal with Nepal, Thibet, Sikkim and Bhutan for the year ending March 1904. Boards. Paper cover. Re. 1-2. (2s.)

Report on the Trade carried by Rail and River in Bengal in the official year 1903-04. F'cap. Board. Paper cover. Re. 4. (5s.)

OLDER PUBLICATIONS.

A General Catalogue of all Government Publications (corrected up to 30th June 1904) may be obtained *gratis* on application to the Officer in charge, Bengal Secretariat Book Depôt.

Publications for sale at the office of the Chief Inspector of Explosives with the Government of India.

Rules for the manufacture, possession and sale of explosives issued by each of the Local Governments and Administrations. Price 12s.

Rules for the transport and importation of explosives issued by the Government of India. Price 12s

Rules for the transport and importation of explosives at the Port of Calcutta. Price 4s.

Publications for sale at the Custom House, Calcutta.

Review of the Maritime Trade of Bengal and its Chief Port (Calcutta) for the year 1903-04. Price Re. 1.

Annual Statement of the Sea-borne Trade and Navigation of Bengal, Foreign and Coasting combined in one volume, for the year 1903-04. Price Rs. 6.

Previous years' volumes can be obtained at the same price.

GOVERNMENT PUBLICATIONS FOR SALE

BY THE SUPERINTENDENT OF GOVERNMENT PRINTING, INDIA, 8 HASTINGS STREET, CALCUTTA.

A General Catalogue of all Government Publications may be obtained gratis from the Government Central Press, Calcutta.

All books published by the Superintendent of Government Printing, India, can be purchased, either directly or through the following or any other booksellers:—

AGENTS IN EUROPE.

Mr. E. Arnold, 41 and 43 Maddox Street, Bond Street, W. London.

Messrs Constable & Co., 16 James Street, Haymarket, W., London.

Messrs. Kegan Paul, Trench, Trubner & Co., Charing Cross Road, London.

Mr. Bernard Quaritch, 15 Piccadilly, London.

Messrs P. S. King and Son, 2 & 4 Great Smith Street, Westminster

Messrs. H. S King & Co., 65 Cornhill, and 9 Pall Mall, London.

Messrs. Grindlay & Co., 54 Parliament Street, London, S W., Agents for the sale of the Army List

Mr. Otto Harrassowitz } Leipzig.
Mr. Karl Hiersemann }

Messrs R. Friedlander & Sohn, Berlin, W. N. Carlstrasse, 11

Mr Ernest Leroux, 28 Rue Bonaparte, Paris.

Mr. Martinus Nijhoff, Hague, Holland

Mr. B. H. Blackwell, 50 & 51 Broad Street, Oxford.

Messrs. Deighton Bell & Co., Cambridge.

AGENTS IN INDIA.

Messrs. Thacker, Spink & Co., Calcutta and Simla.

Messrs. Newman & Co., Calcutta.

Messrs. R. Cambray & Co., Calcutta.

Messrs. S. K. Lahiri & Co., Calcutta.

Eveylu, Hubert, & Co.,* 149, Dhurmotollah Street, Calcutta.

Messrs. Higginbotham & Co., Madras

Messrs. V. Kalyanarama Iyer & Co., Madras.

Messrs. G. A. Natesan & Co., Madras.

Messrs Thacker & Co., Ld., Bombay.

Messrs. A. J. Combridge & Co, Bombay.

Messrs. D. B. Taraporevala, Sons & Co., Bombay

Mrs. Radhabai Atmaram Sagoon, Bombay.

Superintendent, American Baptist Mission Press, Rangoon.

Rai Sahib M. Gulab Singh & Sons, Mufid-i-Am Press, Lahore.

Mr. N. B. Mathur, Superintendent, Nazair Kanun Hind Press, Allahabad.

Manager, Educational Book Depôts, Nagpur and Jubbulpore.*

Manager of the Imperial Book Depot, 63 Chandny Chauk Street, Delhi.*

Manager, "East Coast News," Vizagapatam.*

Manager, "The Agra Medical Hall and Co-operative Association, Limited" (Successors to A. John & Co., Agra).*

Mr. T. K. Seetharama Aiyar, Kumbakonam *

Lala Debi Prasad, Vakil and Manager of Law Press, Cawnpore *

Superintendent, Basel Mission Book and Tract Depository, Mangalore.*

Messrs. P. Varadachary & Co., Madras.*

Mr. Sunder Pandurang, Bombay.*

The Mercantile Mission Branch, Calicut *

H. Dowman, Esq. (late Extra Assistant Superintendent, Survey of India), Allahabad.*

H. Liddell, Esq., Printers, etc., 7, South Road, Allahabad.*

* Agents for sale of the Legislative Department publications.

NOTICE.—Books and Arts required for private use only can be purchased. Applications should be accompanied by a remittance, unless it is wished that the books should be sent by value-payable post, in which case, besides the ordinary postage, an additional charge is made for registration and commission.

Books and Acts required for the public service should be obtained through Local Governments to whom the applicant is subordinate.

Application for Government publications which are no longer in print should be made to the Agents of the particular Government under whose orders they were originally issued.

(*The amounts within parentheses are for packing and postage.*)

List of New Books published during the Current Quarter.

HOME DEPARTMENT.

Scientific Memoirs by Officers of the Medical and Sanitary Departments of the Government of India—Oriental or Delhi Sore by Captain S P. James, M B., I.M S, New series, No. 13. Super-Royal 4to. Limp cover 10a. or 1s. (3a.)

Scientific Memoirs by Officers of the Medical and Sanitary Department of the Government of India—On a parasite found in the White Corpuscles of the blood of dogs by Captain S. P. James. M B., I M.S. New series No. 14. Super-Royal 4to. Limp cover, 10a. or 1s. (3a.)

Imperial Library List of Additions, Third Series, with subject index, March 1905. No 7. Super-Royal 4to. Paper cover, 8a. or 9d. (1s)

* The Private Diary of Ananda Ranga Pillai, Vol. I, 1736 to 1746—Dubash to Joseph Francois Dupleix, Knight of the Order of St. Michael, and Governor of Pondichery —A record of Matters, Political, Historical, Social, and Personal, from 1736 to 1761. Translated from the Tamil by the order of the Government of Madras and Edited by Sir J. Frederick Price, K.C.S I., late of the I.C.S., assisted by R. Rangachari, B.A. Rs. 3 or 4s. 6d. (7a.)

REVENUE AND AGRICULTURE DEPARTMENT.

Progress Report of Forest Administrations in the Andamans for 1903-04. Foolscap. Paper cover. 8a. or 9d. (2a.)

COMPTROLLER-GENERAL.

Appropriation Report on the Accounts of the Government of India for 1903-04 by A. F. Cox, Esq. Foolscap. Board. 8a. or 9d. (6a.)

STATISTICAL DEPARTMENT.

Sea-Borne Trade and Navigation Accounts of British India for the month of February 1905. No. 11 of 1904-05. Royal 8vo. Stitched. 8a. or 9d. (2a.)

List of Books published from October 1904 to March 1905.

LEGISLATIVE DEPARTMENT.

The Indian Registration Act, 1877 (III of 1877), as modified up to 1st April, 1900, with footnotes brought down to 1st November, 1902. 11a. (2a.)

The Indian Emigration Act, 1883 (XXI of 1883), as modified up to 1st December, 1902. 11a.

Act XXX of 1852. An Act for the Naturalization of Aliens, as modified up to 1st December, 1902. 2a. (1a.)

Act V of 1861. The Police Act, 1861. As modified up to 7th March, 1903. 7a. 6p. (1a.)

Act X of 1873. The Indian Oaths Act. As modified up to 1st February, 1903. 3a. 9p. (1a.)

Act XIX of 1883. The Land Improvement Loans Act, 1883. As modified up to 1st February, 1903. 2a. 6p. (1a.)

Act XII of 1884. The Agriculturists' Loans Act, 1884. As modified up to the 15th December, 1896, and with footnotes brought down to the 1st February, 1903. 2a. (1a.)

Act IX of 1890. The Indian Railways Act, 1890. As modified up to 1st May, 1896, with footnotes brought down to 1st January, 1903. 15a. (3a.)

Act XXXIV of 1850. The State Prisoners Act, 1850. As modified up to 30th April, 1903. 2a. 6p. (1a.)

Act XXXIV of 1858. The Lunacy (Supreme Courts) Act, 1858. As modified up to 30th April, 1903. 4a. 3p. (1a.)

Act XXXV of 1858. The Lunacy (District Courts) Act, 1858. As modified up to 30th April, 1903. 2a. 3p. (1a.)

Act V of 1873. The Government Savings Banks Act, 1873. As modified up to 1st April, 1903. 3a. 6p. (1a.)

Act II of 1886. The Indian Income Tax Act, 1886. As modified up to 1st April, 1903. 8a. (1a. 6p.)

Act I of 1878. The Opium Act, 1878. As modified up to 1st December, 1896, with footnotes brought down to 1st March, 1903. 5a. 6p. (1a.)

Act III of 1865. The Carriers Act, 1865. As modified up to 31st May, 1903. 3a. (1a.)

Act IX of 1897. Amending the law relating to Government and other Provident Funds. As modified up to 1st May, 1896, with footnotes brought down to 1st January, 1903. 1a. 6p. (1a.)

Act No. XII of 1855 (Legal Representatives' Suits), as modified up to 1st November, 1904. 1a 6p. (1a.)

Act No. IX of 1860 (Employers and Workmen (Disputes)), as modified up to 1st December, 1904. 1a. 6p. (1a.)

Act No XXI of 1860 (Societies Registration), as modified up to 1st December, 1904. 2a. 9p. (1a.)

The Punjab Laws Act, 1872 (IV of 1872), as modified up to 1st November, 1904. 7a. 1a. (1a.)

The Indian Christian Marriage Act, 1872 (XV of 1872), as modified up to 1st December, 1904. 10a. (1a.)

Act No. X of 1891 (Indian Penal Code Amendment), as modified up to 1st December 1904 1a. (1a.)

The Indian Petroleum Act, 1899 (VIII of 1899), as modified up to the 1st December 1904. 7a. (1a.)

The Indian Extradition Act, 1903 (XV of 1903), as modified up to 1st December, 1904. 5a. 6p. (1a.)

Act V of 1869 The Indian Articles of War, as modified up to 1st December 1904. Royal 8vo. Stitched. Re. 1 2a. (3a.)

Act XV of 1881. The Indian Factories Act. 1881, as modified up to the 1st December 1904. Royal 8vo. Stitched. 5a. 6p. (1a. 6p.)

Act V of 1883. The Indian Merchant Shipping Act, 1883, as modified up to the 1st December, 1904. Royal 8vo. Stitched. 6a. (1a.)

The Central Provinces Code, 3rd Edition, 1905. Cloth. Super-Royal 8vo. Re. 4 or 6s. (6a.)

The Bengal Code, Volume I, 3rd Edition, 1905 (Now ready). Cloth. Super-Royal. Price all 5 Volumes Rs. 30 or 45s. Vol. I. Rs. 6 or 9s. (8a.)

The Public Gambling Act, 1867 (III of 1867), as modified up to the 1st January, 1905. As. 4 or 5d. (1a.)

The Indian Contract Act, 1872 (Act IX of 1872), as modified up to the 30th June, 1901. Royal 8vo. Stitched. Re. 1-4a. (3a.)

HOME DEPARTMENT.

Scientific Memoirs by Officers of the Medical and Sanitary Departments of the Government of India. On a parasite found in persons suffering from enlargement of the spleen in India. by Lieut. S. R. Christophers, M.B., I.M.S., New series, No. 11. Super-Royal 4to. Limp cover. Re. 1 or 3s. (3a.)

Report on the Administration of Criminal Justice in Lower Provinces of Bengal during the year 1903. Foolscap. Paper cover Re. 1. or 1s. 6d. (2a.)

Imperial Library List of Additions. September to December 1904, Nos 1—6. Foolscap. Paper cover. As. 3 or 9d. (2a.) each.

Report on the Administration of Civil Justice in the Lower Provinces of Bengal during the year 1903. Foolscap. Paper cover. Re. 1 or 1s. 6d. (3a.)

Scientific Memoirs by Officers of the Medical and Sanitary Departments of the Government of India on the Morphology, Teratology and Declinism of the Flowers of Cannabis By Major D. Prain, M.B., I.M.S. New series. No. 12. Super-Royal 4to. Limp cover. 14a. 1s. 4d. (3a.)

Quarterly List of Officers in the Departments of the Government of India, October to December 1904, January to March 1905. Foolscap, Paper cover As. 4 or 5d. (1s.)

Annual Report of the Sanitary Commissioner with the Government of India, 1903, with Appendices and Returns of sickness and Mortality among European Troops, Native Troops and Prisoners in India for the year. Foolscap. Board. Re. 3 or 4s. 6d. (8s.)

Report of the Indian Police Commission, 1902-03. Foolscap. Board. With appendices Re. 1-8s. (7s.); without appendices, Re. 1 (6s.)

DEPARTMENT OF REVENUE AND AGRICULTURE.

Report of the Chief Inspector of Mines in India for the year ending 31st December 1903. Foolscap. Board. As. 12 or 1s. 2d. (2s.)

Review of Forest Administration in British India for the year 1902-03. Foolscap. Paper cover. Re. 1-11 or 2s. 6d. (3s.)

Annual Administration Report of the Civil Veterinary Department in India for the official year 1903-04. Foolscap. Paper cover. 12s. or 1s. (2s.)

Records of the Botanical Survey of India, Vol. IV, No. I (An Epitome of the British Indian Species of impatients by Sir J. D. Hooker, G.C.S.I., C.B., F.R.S. Part I. Royal 8vo. Paper cover. 3s. or 4d. (1s.)

Records of the Botanical Survey of India, Vol III, No. 2. The vegetation of the districts of Hughli, Howrah and the 24-Parganas, by D. Prain, Esq. Re. 1-12. or 2s. 8d. (3s.)

Rules framed under section 20 of the Indian Mines Act, 1901 (VIII of 1901) prescribing the Compulsory submission of Annual returns of output and labour of Indian Mines. Foolscap 0-0-6. (1s.)

Rules for the Lease or Sale of Waste Lands in India. 1904 edition. Foolscap. Board. Re. 4 or 6s. (8s.)

Archæological Survey of India. Annual Report, 1902-03. Super-Royal. Cloth. Rs. 20 or £1 10s. (Re. 1 2s.)

Annual Report of the Board of Scientific Advice for India for the year 1903-04. Foolscap. Paper cover. 6s. or 7d. (2s.)

List of Officers in the Department of Revenue and Agriculture, Government of India, and the Departments subordinate to it, corrected to 1st January 1905. As. 8 or 8d. (2s.)

FOREIGN DEPARTMENT.

Report on the Political Administration of the Territories within the Central India Agency for 1902-03. Foolscap Board. Re. 1 or 1s 6d. (3s.)

Report on the Administration of the Civil and Military Station of Bangalore for the year 1902-03. 8s. or 9d. (2s.)

Report on the Administration of Berar for the year 1902-03. Foolscap. Board. Re. 1 or 2s. (2s.)

Report on the Administration of the Civil and Military Station of Bangalore for the year 1903-04. Foolscap. Limp cover. 8s. or 9d. (2s.)

FINANCE DEPARTMENT.

Report on the Administration of the Mint at Bombay and Calcutta for the year 1903-04 Foolscap. Paper cover. Re. 1 or 1s. 6d. (2s.)

Statistics Compiled from the Finance and Revenue Accounts of the Government of India. Receipts and Disbursemets of Home and Indian Accounts from 1st April 1895 to 31st March 1903. Foolscap. Board. Re. 1 or 3s. (9s.)

List of Officers in the Finance and Commerce Department, corrected to 31st October, December 1904, January and February 1905 Royal 8vo. Paper cover. 4s. or 5d. (1s.)

COMPTROLLER-GENERAL.

Finance and Revenue Accounts of the Government of India for the year 1903-04. Foolscap. Board. Re. 1. or 2s. (3s.)

STATISTICAL DEPARTMENT.

Statistics of Cotton Spinning and Weaving in the Indian Mills in June 1904 and in the three months, April to June 1904, compared with the corresponding period of 1902 and 1903, No. 5 of 1904-05. Royal 8vo. Stitched. 2s. or 2d. (1s.) each.

Trade and Navigation Accounts of British India for the months of August, September and October 1904. Nos. 5, 6 and 7 of 1904-05. Royal 8vo. Stitched. 8s. or 9d. (2s.) each.

Accounts of the External Land Trade of British India for the months of June, July and August 1904, Nos. 3, 4 and 5 of 1904-05. Royal 8vo. Stitched. 8s. or 9d. (2s.) each.

Statistics of Cotton Spinning and Weaving in the Indian Mills in July, August, September, October, November, December 1904. Royal 8vo. Stitched. 2s. or 2d. (1s.) each.

Judicial and Administrative Statistics of British India for 1902-03 and preceding years. 8th issue. Foolscap. Board. Re. 1 or 3s. (10s.)

Accounts of the French Possessions in India in the year ending 31st March 1904 and the four preceding years. Foolscap. Paper cover. 2s. or 2d. (1s.)

Accounts of the Trade of Aden in the year ending 31st March 1904 and the four preceding years. Foolscap. Paper cover. 10s. (1s.)

Area and yield of certain principal crops in India. Sixth issue. Foolscap. Paper cover. 5s. or 6d. (2s.)

Sea-Borne Trade and Navigation Accounts of British India for the months of November, December 1904, January 1905. Nos. 8, 9 and 10 of 1904-05. Royal 8vo. Stitched. 8s. or 9d. (2s.)

Accounts of the External Land Trade of British India for the month of September, October 1904. Nos 6, 7 and 8 of 1904-05. Royal 8vo. Stitched. 8s. or 9d. (2s.)

Agricultural Statistics of India for the years 1898-99 to 1902-03 in two Volumes. Foolscap. Board. Both Volumes. Rs. 3-8s. or 5s. 3d. (12s.)

Accounts relating to the trade carried by Rail and River in India in the quarter ending June 1904, compared with the corresponding period of the years 1902 and 1903. No. 1 of 1904-05. Foolscap. Paper cover. 8s. or 9d. (3s.)

Financial and Commercial Statistics of British India, II issue, 1904. Super-Royal, Paper cover. Re. 4 or 6s. (12s.)

Tariff Shcedules, 1905. Royal 8vo. Stitched. 6s. or 7d. (1s.)

Annual Statement of the Coasting Trade and Navigation of British India in the year ending 31st March 1904. Super-Royal. Board. Rs. 2 or 3s. (7s.)

ACCOUNTANT-GENERAL.

History of Services of Gazetted and other Officers serving under the Government of Bengal, corrected to 1st July 1904. In two parts. Royal 8vo. Board. Re. 5 or 7s. 6d. (12s.)

MILITARY DEPARTMENT.

Return of Wreck and Casualties in Indian Waters, 1902-03. Foolscap. Board. Re. 1 or 1s. 6d. (3s).

Class Hand Books for the Indian Army—Mappillas or Moplahs, by Major P. Holland Pryor. Royal 8vo. Board. Re. 1-4 or 1s. 11d. (5s.)

Hand Book for the Indian Army—Jats, Gujars, and Ahirs, by Major A. H. Bingley. Royal 8vo. Board. Re. 1 or 1s. 6d. (5s.)

Classified List and Distribution Return of the Establishment of the Military Works Services corrected up to 31st December 1904. Royal 8vo. Paper cover 4s. or 5d. (1s.)

RAILWAY BOARD.

Administration Report of the Telegraph Department for 1903-04. Foolscap. Paper cover, 3s. or 6d. (2s.)

Public Works Department Classified List of the Subordinate Establishment, corrected to 30th June 1904. Royal 8vo. Paper cover 4s. or 5d (1s)

Public Works Department Classified List and Distribution of Establishment corrected up to 31st December 1904. Super-Royal 8vo. Paper cover. Rs. 2 or 3s. (4s.)

Selections from the Records of the Government of India in the Public Works Department, No. CCXXXVIII.—Relative Merits of Broad and Metre Gauge Lines of Railway. Foolscap. Board. 4s. or 5d. (1s. 6p.)

Classified List of the Subordinate Establishment corrected up to 31st December 1904. Royal 8vo. Paper. 4s. or 5d. (1s.)

List of new books for sale at Thomason College, Roorkee, which were not advertised before.

Roorkee Treatise on "Railways," 4th Edition, revised by F. Wolly Dod, F.C.H. Price, Rs. 3 per copy.

Roorkee Treatise on "Irrigation Work." By Lieutenant-Colonel J. Clibborn, I.S.C., B.A., L.C.E., C.I.E. Price, Rs. 9 per copy.

Roorkee Treatise on "Sanitary Engineering." Compiled by Lieutenant-Colonel J. Clibborn, I.S.C., B.A., L.C.E., C.I.E. Price, Rs. 4-8 per copy.

Roorkee Manual of "Applied Mechanics," Volume II. The stability of structures mostly by graphic methods, by Lieutenant-Colonel J. H. C. Harrison, R.E. Price, Rs. 8-2 per copy.

Roorkee Manual of Hydraulics. Price per copy, Re. 1-4. (No. XIX, Elementary Treatise.) By E. F. Tipple, Esq., B.A.

Designs for Wooden Bridges, together with rules for calculating the area of waterway, etc., and Plates. By late Rai Bahadur Kunhya Lal. Price per set, Rs. 4-2

Pamphlet on Examination for Acid Radicals: Tables giving Analysis of Acids. Price per copy, 8s.

Pamphlet on Examination for Acid Bases: Tables giving Analysis of Metallic Bases. Price, 8s. per copy.

List of New Books available for sale in the College Book Depot.

Roorkee Treatise on Civil Engineering, Section XIII. Drawing for Engineer students, Part I. By Major E. H. deV. Atkinson, R.E., Principal, Thomason College, Roorkee. Price per copy Rs. 3-2, including packing, postage, etc.

Hand-Book of the Thomason Engineering College, Roorkee, Illustrated. Price Rs. 6-12 per copy, including packing, postage, etc.

A list of new books and periodicals for sale at the Library of the Asiatic Society of Bengal, 57 Park Street, Calcutta.

SOCIETY'S PUBLICATIONS.

Journal, Part I, Nos. 3 and 4 of 1904, at Rs. 2.
" Part II, Nos. 3 to 5 of 1904, at Rs. 2.
" Part III, Nos. 3 and 4 of 1904, at Rs. 2.
Proceedings Nos. 7 and 8 of 1904, at 8s.

BIBLIOTHECA INDICA.

Bhatta Dipika. Vol. I, Fasc. 5, at 6s.
Catadusani. Vol. I, Fasc. 2, at 6s.
Clokavartika (English). Fasc. 5, at 12s.
Catasahasrika Prajnaparamita. Part I, Fasc. 8, at 6s.
Caturvarga Cintamani. Vol. V, Fasc., 2, 3, at 6s.
Catapatha Brahmana. Vol. III, Fasc. 5, at 6s.
Mahabhasyaprodipoddyota. Vol. II, Fasc. 12, at 6s.
Nityacara Pradipah. Fasc. 5, at 6s.
Sradhya Kriya Kaumudi. Fasc. 6, at 6s.
Tantravartika (English). Fasc. 3, at 12s.
Vidhana Parijata. Vol. I, Fasc. 6, at 6s.

List of Books published by the Meteorological Department during the Current Quarter.

Indian Meteorological Memoirs. Vol. XVI, Part II, by Sir John Eliot. Quarto. Paper cover Rs. 3.

List of books published by the Meteorological Department from 1st October 1904 to 31st March 1905.

Monthly Weather Review, April to September 1904. (Illustrated by 6 plates) Quarto. Paper cover. Re 1 per month.

Indian Meteorological Memoirs, Vol. XVI. Part II. By Sir John Eliot. Quarto Paper cover. Rs. 3.

APPENDIX TO

The Calcutta Gazette.

WEDNESDAY, APRIL 26, 1905.

NOTICES TO MARINERS.

THE following Notices are published for general information.

W. A. INGLIS,
Secretary, Marine Department.

CALCUTTA, *the 20th April 1905.*

ARABIA, NORTH COAST—PERSIAN GULF.

Shat-al-Arab river—Certain buoys moved from present positions.

No. 184 (first publication).—With reference to Notice to Mariners No. 106, dated 4th April, issued by this office, a further telegraphic communication has been received from the Director of the Royal Indian Marine, stating that three inner buoys at the entrance of the Shat-al-Arab river will be moved on the 19th instant from present position as follows:—

No. 1.—North 65° East 5¾ cables.
No. 2.—North 71° East 7¾ cables.
Bar buoy.—North 85° East 11¼ cables best water, one cable eastward of new positions.

CHINA—HONG KONG.

Sandy bay—Shoal.

No. 185 (first publication).—The British Admiralty has given [notice (No. 235 of 1905) of the existence of a shoal of small extent, with a depth of 3 fathoms over it at low water, in Sandy bay on the south-western side of Hong Kong, situated with the flagstaff about 3 cables south-eastward from Hoichi wan, bearing N. 70° E., distant 4 cables, and Green island lighthouse N. 32° W.

Approximate position, lat. 22° 16′ N., long. 114° 7¼° E.

(Variation 1° Easterly in 1905.)

This Notice affects the following Admiralty Charts:—Hong Kong, Nos. 1180 and 1466: East Lamma channel No. 3429: Also, China Sea Directory, vol. III, 1904, page 69.

EASTERN ARCHIPELAGO, WEST COAST—Banjak islands.

Pulo Tuangku (Tunangku)—Shoal to the northward.

No. 126 (first publication).—The British Admiralty has given notice (No. 241 of 1905) of the existence of a reef, with a depth of one fathom over it, off the north coast of Tuangku (Tunangku) situated in a position from which Pandan bears S. 77° E., distant 1½ miles, and the eastern extremity of pulo Laraga N. 4° W.

Approximate position on Chart No. 855, lat. 2° 14½′ N., long. 97° 13′ E.

(Variation 1° Easterly in 1905.)

This Notice affects the following Admiralty Chart:—Banjak islands on Chart No. 855: Also, China Sea Directory, vol. I, 1896, page 280.

EASTERN ARCHIPELAGO—Sumatra, north-east coast.

Deli river—New channel to be dredged—Light-vessel and buoys.

No. 127 (first publication).—The British Admiralty has given notice (No. 247 of 1905) that a new channel about 2 cables wide is to be dredged in a N.N.Ely. direction from light-buoy No. 5, at the entrance to Deli river, and that the following alterations will be made in consequence in the position of the light-vessel and in the buoyage in the approach to that river:—

a. The light-vessel will be moved 1$\frac{9}{10}$ miles S. 73° E. from her present position to the centre of the new channel entrance.

Approximate position, lat. 3° 53′ N., long. 98° 45′ E.

b. Black can buoy No. 1, and white conical buoy No. 1, will be moved to the eastward to mark the new channel.

c. Black can buoy No. 2, and white conical buoy No. 2, will be withdrawn.

d. The colour of the light-buoy No. 3 will be changed from black to white.

Further Notice will be given when information has been received that these alterations have been effected.

(Variation 1° Easterly in 1905.)

This Notice affects the following Admiralty Chart:—Plan of Deli river on Chart No. 1353: Also, List of Lights, part VI, 1905, No. 399; and China Sea Directory, vol. I, 1904, page 81.

JAPAN—North-west coast.

Shimonoseki strait—Rock—Buoys established and altered.

No. 128 (first publication).—The British Admiralty has given notice (No. 248 of 1905) of the existence of a rock, with a depth of 2 fathoms over it, situated in a position from which Hane ishi bears N. 61° W., distant 3½ cables, and Ganryu-jima △ S. 33° W.

Approximate position, lat. 35° 56½′ N., long. 130° 55¾′ E.

Also, that the undermentioned buoys have been established off Kokura in the south-western part of the strait:—

a. An iron conical buoy, painted red, has been moored in a position from which Manaita iwa light bears N. 52° E., distant 12 cables, and Daibahana light N. 6° W.

b. A cask buoy, painted red, has been moored in a position from which Manaita light bears N. 88° E., distant 17¾ cables, and Daibahana light N. 13° E.

c. The red conical buoy surmounted by staff and triangle, marking the eastern edge of Ozone, has been moved one cable N. 38° W. from its former position, and is now situated at a distance of 9 cables N. 45° W. from Manaita light.

Approximate position of Manaita light, lat. 33° 54¾′ N., long. 130° 53¾′ E.

d. The red conical buoy surmounted by staff and triangle marking the south-eastern edge of Naka no su in the eastern entrance to the strait, has been moved half a cable N. 8° E. from its former position, and is now situated at a distance of one mile N. 25° E. from Hesaki light.

(Variation 4° Westerly in 1905.)

This Notice affects the following Admiralty Charts:—Shimonoseki strait, Nos. 532 and 1578: Also, China Sea Directory, vol. III, 1904, pages 504, 505, 506, 498.

JAPAN—Naikai (Inland sea).

Shimonoseki strait—Wreck in eastern approach disappeared.

No. 129 (first publication).—With reference to Notice to Mariners No. 89, dated 14th March 1903, issued by this Office, the British Admiralty has given further notice (No. 249 of 1905) that the wreck which sank in the eastern approach to Shimonoseki strait, at a distance of 14 cables N. 34° E. from Hesaki lighthouse, no longer exists; it has therefore been expunged from the Chart.

Approximate position, lat. 33° 58¾′ N., long. 131° 2¼′ E.

(Variation 4° Westerly in 1905.)

This Notice affects the following Admiralty Charts:—Simonoseki strait to Maruyama saki, No. 3225; Shimonoseki strait, Nos. 532, 1578: Also, Sailing Directions for Japan, &c., 1904, page 498.

AFRICA, SOUTH—Cape Colony—St. John.

Cape Hermes light—Original power restored.

No. 130 (first publication).—With reference to Notice to Mariners No. 79, dated 10th March 1905, issued by this Office, the British Admiralty has given further notice (No. 250 of 1905) that the power of cape Hermes light (*white flashing*), St. John or Umzimvubu river, which had been temporarily reduced has been increased to its original strength, viz., 30,000 candles, and consequently it is now visible in clear weather from a distance of 20 miles.

Approximate position, lat. 31° 38′ S., long. 29° 33½′ E.

The characteristics of the light are as given in the Admiralty List of Lights, part V, 1905, No. 24.

This Notice affects the following Admiralty Chart:—St. John or Umzimvubu river, No. 2566: Also, List of Lights, part VI, 1905, No. 24; Africa Pilot, part III, 1897, page 165; and Supplement, 1900, page 10.

PACIFIC OCEAN, SOUTH.—Tuamotu Group.

Ravahere Island.—Rocky patches reported to the eastward.

No. 132 second (publication).—The British Admiralty has given notice (No. 212 of 1905) that two rocky patches, with depths of from 5 to 6 fathoms over them, have been seen at a distance of about 8 miles eastward from Ravahere or Dawahaidi island, Tuamotu group; these two patches are about 1½ cables apart in a north and south direction from each other.

Approximate position, lat. 18° 16′ S., long. 142° 2′ W.

This Notice affects the following Admiralty Charts:—Pacific Ocean, No. 783; Tuamotu archipelago, No. 767: also Pacific Islands, volume III, 1900, page 124; and Supplement, 1903, page 8.

EASTERN ARCHIPELAGO.—Sumatra, North coast.

Jambu Ayer or Diamond point.—Intended light.

No. 133 (second publication).—The British Admiralty has given notice (No. 224 of 1905) that it is intended to establish in a screw pile structure, erected in a depth of 9 feet off Jambu Ayer or Diamond point, a *white flashing* light *every five seconds*. It will be elevated 87 feet above high water, and visible in clear weather from a distance of 15 miles. The light will be of the 4th order, the duration of the flash being under one-tenth of a second.

The work was commenced in February, and it is hoped that the light may be exhibited in May.

Approximate position, Diamond point, on Chart 219, lat. 5° 16′ N., long. 97° 30½′ E.

Further Notice will be given when this light has been established.

This Notice affects the following Admiralty Charts:—Bay of Bengal No. 70; Bassein river to Pulo Penang, No. 830; Acheh head to Tyingkok bay, No. 2760; Acheh head to Diamond point, No. 219; Diamond point to Pulo Berhala, No. 1353: Also List of Lights, part VI, 1905, page 63; and China Sea Directory, Vol. I, 1896, page 65.

BAY OF BENGAL—Burma coast.

Kyouk Phyou harbour—Actual depth of water on the Irrawaddy shoal.

No. 105.—(third publication).—The Master of the S.S. *Pachumba* reports that when passing the Irrawaddy shoal, outside Kyouk Phyou harbour, on the morning of the 24th March, he observed at L. W. S. that rocks were showing 3 feet above water on the shoal. This shoal is marked on the Admiralty Chart as having 2½ fathoms water at L. W. S. Mariners are accordingly warned.

ARABIA, NORTH-EAST—Persian gulf.

Shat-al-Arab—Mooring buoys to be placed at entrance.

No. 106 (third publication).—A telegraphic communication has been received from the Director of the Royal Indian Marine, stating that it is contemplated mooring buoys at the entrance of the Shat-al-Arab river, in positions making deep water channels, about the middle of April. Mariners are accordingly cautioned not to enter or leave the river after the 15th April without ascertaining whether buoys have been moored.

A further notification will be made as soon as new positions have been determined.

AUSTRALIA—Victoria.

Port Phillip entrance—Sweeping and blasting operations.

No. 107 (third publication).—With reference to Notice to Mariners No. 376, dated 4th November 1904, issued by this Office, the British Admiralty has given further notice (No. 165 of 1905 that, on or about 9th January 1905, sweeping and blasting operations for removing the shoal patches obstructing the entrance into Port Phillip would be resumed.

The steam-vessel employed for this purpose will, when sweeping, display the Code signal X. H. C., and when blasting will hoist letter B, at the masthead. Before the charge is exploded this vessel will give prolonged blasts with the steam whistle, and a red flag will be shown from the larger of the attendant boats.

Caution.—When these signals are displayed mariners are warned not to approach the boats engaged in this work nearer than half a mile, and they are specially requested to keep clear of these vessels when sweeping operations are in progress, as the apparatus renders the vessel's movements slow and uncertain.

Approximate position, lat. 38° 18′ S., long. 144° 38′ E.

This Notice affects the following Admiralty Chart :—Port Phillip entrance, No. 2747a: Also, Australia Directory, vol. I, 1897, page 432.

BAY OF BENGAL—Burma coast.

Rangoon river—Shoal in entrance—Buoy moved.

No. 108 (third publication).—The British Admiralty has given notice (No. 169 of 1905) of the existence of a shoal, of small extent, with a depth of 19 feet over it at low water, in the entrance to Rangoon river; it is situated at a distance of 8¼ cables S. 63° W. from the Upper Eastern buoy, or 2$\frac{9}{10}$ miles S. 53° E. from Survey beacon No. 3.

Also, that Lower Spit buoy has been moved 3½ cables N. 23° E. from its former position, and is now moored with Survey beacon No. 3, bearing N. 88° W., distant 2½ miles, and Elephant point obelisk N. 24° W.

Approximate position, lat. 16° 26′ N., long. 96° 21′ E.

(*Variation 1° Easterly in 1905.*)

This Notice affects the following Admiralty Chart :—Rangoon river, No. 833 : Also, Bay of Bengal Pilot, 1901, page 351.

CHINA SEA—Gulf of Siam.

Middle island—Amended position of rock to the southward.

No. 109 (third publication).—With reference to Notice to Mariners No. 179, dated 27th May 1904, issued by this office, the British Admiralty has given further notice (No. 172 of 1905) that, according to the French Government Chart recently received, the two rocky heads, with depths of 8 and 5 feet over them, described in paragraph 6 of the above notice,

are situated at a distance of 7 cables S. 14° W. from the south point of Middle island, and not $1\frac{6}{10}$ cables S. 34° W. as originally stated.

Approximate position on Chart No. 2725, lat. 10° 26′ N., long. 103° 45¼′ E.

(Variation 2° Easterly in 1905.)

NOTE.—A new edition of Chart No. 2725 will shortly be issued.

This Notice affects the following Admiralty Charts:—Bay island to Pulo Obi, No. 2723; Koh Tron, No. 2725; Koh Kut to Bay island, No. 2722: Also, China Sea Directory, vol. II, 1899, page 351.

PACIFIC OCEAN—THE PHILIPPINES—SEBU, EAST COAST.

Capitancillo island—Light established.

No. 110 (third publication).—With reference to Notice to Mariners No. 209, dated 15th June 1903, issued by this Office, the British Admiralty has given further notice (No. 173 of 1905) that the temporary white fixed light exhibited from a tree on Capitancillo island would, on January 1st, 1905, be replaced by a *group flashing* light showing a group of *three white* flashes every *ten seconds* followed by a *red* flash, the eclipses between the white flashes being *one and a half seconds*, and between the groups of white flashes and the red flash *three and a half seconds*; it should be visible in clear weather from a distance of 17 miles, and would be exhibited from a steel tower 80 feet high.

Approximate position, lat. 10° 59′ N., long. 124° 6′ E.

NOTE.—The period of system of the above light must be considered approximate, as the time occupied by the flashes is not included.

This Notice affects the following Admiralty Charts:—Molucca passage to Manila, No. 943; Sulu or Mindoro sea, No. 2578: Also, List of Lights, part VI, 1905, No. 593; and Eastern Archipelago, part I, 1902, page 280.

PACIFIC OCEAN—THE PHILIPPINE ISLANDS—LUZON, MANILA BAY.

Port Kavite—Wreck removed—Buoy withdrawn.

No. 111 (third publication).—With reference to Notice to Mariners No. 434, dated 20th December 1904, issued by this Office, the British Admiralty has given further notice (No 174 of 1905) that the wreck of the *San Juan de Ulloa* in Kañacao bay, port Kavite, having been removed, the buoy marking the position and formerly moored at a distance of 2½ cables S 8° W. from Sangley point light-house has been withdrawn.

Approximate position, lat. 14° 29¾′ N., long. 120° 54¾′ E.

(Variation 1° Easterly in 1905.)

This Notice affects the following Admiralty Chart:—Port Kavite, No. 975: Also, China Sea, vol. II, 1899, page 307; and Eastern Archipelago, part I, 1902, page 61.

PACIFIC OCEAN—THE PHILIPPINE ISLANDS—LUZON.

Manila breakwater—Wreck to the westward—Buoy.

No. 112 (third publication).—The British Admiralty has given notice (No. 176 of 1905) that the wreck of the brigantine *Flores de Maria* lies sunk, with the foremast above water, to the westward of Manila breakwater now under construction; a buoy, painted in red and black horizontal bands, has been moored in a depth of 30 feet about 30 yards south-westward from the wreck, in a position from which the light on the northern mole at the entrance to Pasig river bears N. 20° E., distant 1¼ miles, and Ermita church N. 78° E.

Approximate position, lat. 14° 35′ N., long. 120° 56¼′ E.

(Variation 1° Easterly in 1905.)

This Notice affects the following Admiralty Chart:—Manila bay, No. 976: Also, China Sea, vol. II, 1899, page 310; and Eastern Archipelago, part I, 1902, page 65.

CHINA, SOUTH-EAST COAST.

Cape of Good Hope—Amended position of wreck to the south-eastward.

No. 113 (third publication).—With reference to Notice to Mariners No. 103, dated 1st April 1905, issued by this Office, the British Admiralty has given further notice (No. 177 of 1905) that a wreck, assumed to be that of the S.S *Workfield*, lies sunk with two masts

above water in a position from which Cape of Good Hope bears N. 17° W., distant about 7½ miles.

Approximate position, lat. 23° 7′ N., long 116° 51′ E.

(Variation Nil in 1905.)

This Notice affects the following Admiralty Charts:—Formosa island, &c., No. 1968; Hong-Kong to the Brothers, No. 1962: Also, China Sea Directory, vol. III, 1904, page 147.

PACIFIC OCEAN—Marshall islands.

Arhno Atoll—Amended position of reef reported to the south-eastward.

No. 114 (third publication).—With reference to Notice to Mariners No. 284, dated 19th August 1904, issued by this Office, the British Admiralty has given further notice (No. 178 of 1905) from an examination of the reckoning kept by the Master of the Schooner *Neptun*, the reef he reported that he had seen south-eastward of Arhno Atoll, Marshall islands, is situated approximately in lat. 7° 6′ N., long. 172° 25′ E., and not in lat. 6° 49′ N., long. 172° 20′ E., as before stated. The reef was searched for in the amended position however by H.I.G.M.S. *Condor*, without success; but as the natives of that Atoll state that there is a reef in this locality, it has been placed on the chart with P.D. against it in the amended position.

This Notice affects the following Admiralty Charts:—Atlantic and Indian oceans No. 2483; Pacific ocean, No. 2683; Pacific ocean, north-west, No. 781; Marshall islands No. 983: Also, Pacific Islands, vol. II, 1900, page 274.

CHINA, EAST COAST—Mirs bay.

Tolo channel—Ledge extending from point.

No. 115 (third publication).—The British Admiralty has given notice (No. 179 of 1905) of the existence of a ledge of rocks in Tolo channel, Mirs bay, extending 150 yards in a S. 69° W direction from the point (45 feet) situated at a distance of 7½ cables N. 68° W. from Mount Hallowes. This ledge, which is 15 yards wide, has a depth of 9 feet over it at its outer extremity, and about midway between its extremity and the point there is a rock awash at low-water springs.

Approximate position, lat. 22° 27½′ N., long. 114° 18′ E.

(Variation Nil in 1905.)

This Notice affects the following Admiralty Chart:—Tolo harbour, No. 3329: Also, China Sea Directory, vol. III, 1904, page 131.

NEW ZEALAND—North island—Auckland approach.

Whangaparaoa peninsula—Spit extending from—.

No. 116 (third publication).—The British Admiralty has given notice (No. 180 of 1905) that a sand spit, with a depth of 4 to 5 fathoms over it, extends 7 cables in a south-easterly direction from the south-eastern extremity of Whangaparaoa peninsula; from the end of the spit, where there is a depth of 4 fathoms, Tiri Tiri light bears N. 50° E., distant 3 miles.

Approximate position, lat. 36° 37′ 40″ S., long. 174° 51′ 50″ E.

(Variation 14° Easterly in 1905.)

This Notice affects the following Admiralty Chart:—Tutukaka head to Mayor island No. 3543: Also New Zealand Pilot, 1901, page 48.

CHINA SEA—Formosa (Taiwan).

Ke lung harbour—Area of submarine defence—Regulations for passing through.

No. 117 (third publication).—The British Admiralty has given notice (No. 192 of 1905) that the area of submarine defence of Ke lung harbour is bounded approximately by a line drawn in a N. 6° W. direction from Kokohei kaku to the north extreme of the Ke lung islands (Keiro to), and another line drawn from the north extreme of the Ke lung islands

in a S. 78° W. direction to a point situated about 2¼ miles north-westward from Banjintai Bi lighthouse.

Approximate position, Banjintai light, lat. 25° 9′ N., long. 121° 44¼ E.

The following regulations are to be observed by vessels desiring to enter or leave Ke lung harbour:—

(1) The area, contained within the abovementioned lines and the shore, is under control of the officer in charge of the Ke lung special submarine mine defence, who is empowered, should necessity arise, to prohibit vessels passing through or anchoring in the prescribed area, excepting in the positions assigned to them.

(2) All vessels inward or outward bound, with the exception of regular mail steamers, and vessels belonging to Government departments, must obtain permission of the officer in charge to enter this area.

(3) No vessels, excepting those belonging to the Army and Navy, should enter this area at night time (sunset to sunrise) without permission.

(4) Vessels proceeding through this area must do so at a speed not exceeding 5 knots.

(5) Fishing, except within the limits specially notified, is prohibited over this area.

This Notice affects the following Admiralty Charts:—Ockseu island to Tung yung, No. 1761; Ke lung harbour, No. 2618: Also, China Sea Directory, vol. III, 1904, page 261.

CHINA—Hong Kong approach—Mawan island.

Kap shui mun (Kap sing mun) light—Alteration in—.

No. 118 (third publication).—The British Admiralty has given notice (No. 207 of 1905) that the two white fixed lights at present exhibited from the western point of Mawan island will be replaced by a *red fixed* dioptric light of the 6th order, elevated 50 feet above high water, and visible in clear weather from a distance of 6 miles. It will be shown from a white mast erected in the same position. There is a white hut at the foot of the mast.

Approximate position, lat, 22° 21′ N., long. 114° 3¼′ E.

This Notice affects the following Admiralty Chart:—Approaches to Hong Kong, No. 1180: Also, List of Lights, part VI, 1905, No. 720a; China Sea Directory, vol. III, 1904, page 63.

AUSTRALIA, SOUTH—Spencer gulf—Approach to port Lincoln.

Cape Donnington—Proposed establishment of a white light.

No. 119 (third publication).—The President of the Marine Board, Port Adelaide, has given notice (No. 3 of 1905) that it is proposed to establish, on Cape Donnington, a White Light, showing red sectors over Dangerous Reef and Boston Island.

Further particulars will be published.

This affects Admiralty Chart No. 2389B.

AUSTRALIA, SOUTH—Spencer gulf.

Secret Rock—A pile beacon to be placed.

No 120 (third publication).—The President, Marine Board, Port Adelaide, has given notice (No. 4 of 1905), informing Masters of vessels and others that it is intended on the 10th instant, circumstances permitting, to place a Pile Beacon to mark the position of the Secret Rock.

The Beacon, having a diamond-shaped head and painted black, will be erected in lat. 34° 31′ 15″ S., long 136° 7′ 30″ E. (approximate), and on the eastern edge of the rock in 10ft. L.W.S., with Point Bolingbroke bearing S 42° W., two miles distant, and the centre of Kirkly Island E. 18° S., distant five miles.

This affects Admiralty Chart No. 2389B.

AUSTRALIA, SOUTH—Gulf St. Vincent.

Port Adelaide—Approach to Semaphore anchorage.

No. 121 (third publication).—The President, Marine Board, Port Adelaide, has given notice (No. 6 of 1905) that recent soundings show about 6in. less water on the four (4) fathom shoal than indicated by Admiralty Charts Nos. 1752 and 2389B. Masters of heavy draught vessels should, therefore, when approaching the anchorage (especially near low water), not bring the old Port Adelaide Lighthouse or the light thereon on a bearing north of N.E. by E. until the green light on the Semaphore Jetty bears S.E. or the two red lights are in line. They may then steer in and select an anchorage according to the vessel's draught.

Vessels leaving the anchorage should steer out N.W. until the above-mentioned bearings are on.

The shoal spot referred to bears from the lighthouse on Wonga Shoal N. 33° 30′ W., distant about 1·3 miles, and from the old structure S. 48° W., distant about 1·9 miles.

This affects Admiralty Charts Nos. 1752 and 2389B.

E. J. Beaumont, Comdr., R.I.M.,
Port Officer of Calcutta.

APPENDIX TO

The Calcutta Gazette.

WEDNESDAY, APRIL 26, 1905.

GENERAL JURY LIST.

LIST of Persons liable to serve on Common Juries in the High Court of Judicature at Fort William in Bengal, for the year ensuing from 1st May 1905, pursuant to Act V of 1898.

No.	Names.	Style or Calling.	Residence or place of business.	Religion.	Remarks.
	A				
*** 1	Abbey, F A	... Clerk, Foreign Office	... Esplanade, West	... Christian	Errors in name and description can be corrected on communication to the office of the Clerk of the Crown. Persons claiming exemption should communicate their claims and grounds thereof to the Clerk of the Crown as soon as possible after service of summons, and so also should any person summoned and unable to attend for any cause, stating the cause, so that, if sufficient cause is shown, the Sheriff may be directed to summon another Juryman.
2	Abbey-Yates, R	... Superintendent of Ledgers, office of Reporter on Economic Products to the Government of India.	1 Sudder Street ...	ditto	
3	Abbott, C A	... Assistant, Ralli Brothers	... 1 & 2, Church Lane ...	ditto	
4	Abbott, G F	... Assista^{n}t, *Statesman* Office	... 3, Chowringhee ...	ditto	
5	Abrahams, A S	... Assistant, E D Sassoon & Co	... 2 & 3, Clive Row ...	Hebrew	
6	Acton, Ernest	... Manager, Caledonian Steam Printing Works.	3, Wellesley Place ...	Christian	

No.	Names.	Style or Calling.	Residence or place of business.	Religion	Remarks.
	A				
7	Acton, H T	... Assistant, Balmer, Lawrie and Co. ..	103, Clive Street ...	Christian	
8	Adams, A G	... Assistant, Harold & Co ...	3, Dalhousie Square ...	ditto	
9	Adkins, F E	... Assistant, Morrison and Cottle ...	2, Esplanade Row, East ...	ditto	
10	Adolphus, H V	... Inspector of Vacant Houses, Municipal Office.	Municipal office ...	ditto	
11	Adshed, E E	... Assistant, Arlington & Co ...	5, Dalhousie Square ...	ditto	
12	Advani, B N	... Chief Clerk, Chief Engineer's Office, E I R	E I R House ...	ditto	
13	Agacy, C L	... Measurer, Licensed Measurers' Department, Bengal Chamber of Commerce.	2, Clive Street ...	ditto	
14	Agacy, H O	... Assistant, McLeod & Co ...	31, Dalhousie Square ...	ditto	
15	Ainsley, Capt. J	... Assistant, Macneill & Co ...	2, Clive Ghât Street ...	ditto	
16	Akers, A G	... Caretaker, Hongkong and Shanghai Banking Corporation.	31, Dalhousie Square ...	ditto	
17	Albert, A	... Assistant, Bathgate & Co ...	19, Old Court House Street ...	ditto	
18	Albert, H	... 3rd Grade Accountant, Office of Controller of Military Accounts, E. C.	3, Koila Ghât Street ...	ditto	
*19	Albert, R C	... Clerk, Foreign Office ...	Esplanade, West ...	ditto	
20	Alexander, G F L	... Assistant, Balmer, Lawrie & Co ...	103, Clive Street ...	ditto	
21	Allan, H E	... Accountant, 3rd grade, Military Accounts Department, Ordnance and Clothing Branches.	Military Accounts Department Buildings, Koila Ghât Street.	ditto	
22	Allen, C J	... Assistant, W Leslie & Co ...	2, Chowringhee ...	ditto	
23	Allen, F W	... Assistant, Francis, Harrison, Hathaway & Co.	13, Government Place, East ...	ditto	
24	Allen, F W	... Pipe layer, Municipal Office ...	19, Ram Sanker Roy's Lane	ditto	
25	Allen, J R G	... Assistant Accountant, Bank of Bengal.	Strand ...	ditto	
26	Allen R C	... Sub-Accountant, Hongkong and Shanghai Banking Corporation.	31, Dalhousie Square ...	ditto	
27	Allison, J E	... Measurer, Licensed Measurers' Department, Bengal Chamber of Commerce.	2, Clive Street ...	ditto	
28	Ambrose, T	... Assistant, Mackinnon, Mackenzie & Co.	16, Strand ...	ditto	

29	Anderson, M	...	Boiler Inspector, Office of the Commissioners for the Inspection of Steam-boilers.	309, Bow Bazar Street	...	ditto
30	Anderson, R	...	Assistant, Mackintosh, Burn & Co ...	8, Esplanade, East	...	ditto
31	Anderson, R P	...	Assistant, Shaw, Wallace & Co ...	20, Strand Road	...	ditto
32	Anderson, S G	...	Assistant, Williamson, Magor & Co ...	4, Mangoe Lane	...	ditto
33	Anderson, W	...	Partner, Hall and Anderson ...	31, Chowringhee	...	ditto
34	Andrews, C	...	Assistant Litho Printer, Surveyor-General's Office.	14, Wood Street	...	ditto
35	Andrews, E J	...	Assistant, Francis, Harrison, Hathaway & Co.	13, Government Place, East	...	ditto
36	Andrews, H M	...	ditto ...	ditto	...	ditto
37	Andrews, P T	...	ditto ...	ditto	...	ditto
38	Annan, D Y	...	Assistant, Jessop & Co, Ld ...	93, Clive Street	...	ditto
39	Annett, A H	...	Assistant, Atkinson Brothers, Ld ...	13, Chowringhee	...	ditto
40	Antram, E W	...	Assistant, Poppe, Delius & Co ...	15, Clive Row	...	ditto
41	Apcar, M V	...	M V Apcar & Co ...	11-1, Sukeas' Lane	...	Armenian
42	Archibald, J H G	...	Assistant, Hall and Anderson ..	31, Chowringhee	...	Christian
43	Armitage, C C	...	Assistant, Kettlewell, Bullen & Co ...	21, Strand Road	...	ditto
44	Armstrong, G B	...	Assistant, Hamilton & Co ...	8, Old Court House Street	...	ditto
45	Asser, O	...	Assistant, J C Duffus & Co ...	10, Clive Row	...	ditto
46	Atkins, C G	...	Head Verifier, Audit Department, E I R	E I R House	...	ditto
47	Atkinson, C M	...	Assistant, A & J Main & Co, Ld. ...	31, Dalhousie Square	...	ditto
48	Atkinson, C V	...	Assistant, Atkinson Brothers, Ld ...	13, Chowringhee	...	ditto
49	Atkinson, E C	...	Assistant, Thacker, Spink & Co ...	5, Government Place	...	ditto
50	Atkinson, J H	...	Firm of Atkinson Brothers, Ld ...	13, Chowringhee	...	ditto
51	Atkinson, J J	...	Engineer, Kilburn & Co ...	4, Fairlie Place	...	ditto
52	Audsley, A E MacA	...	Registrar, Geological Survey Office ...	Museum	...	ditto
53	Augier, E G	...	Clerk, Controller of Stores' Office, E I R.	E I R House	...	ditto
54	Augustin, A H	...	Jr. 3rd Class Clerk, Lower Division, Office of Secretary to the Government of India, Military Department.	6, Esplanade, East	...	ditto

No.	Names.		Style or Calling.	Residence or place of business.	Religion.	Remarks
	A					
*.*55	Augustin, E F	...	6th Class Senior Clerk, Upper Division, Office of Secretary to the Government of India, Military Department.	Military Accounts Department Buildings, Koila Ghât.	Christian	
*.*56	Augustin, P J	...	Assistant, Office of Secretary to the Government of India, Legislative Department.	5, Esplanade, West ...	ditto	
57	Avatt, A	...	Assistant, Hall and Anderson ...	31, Chowringhee ...	ditto	
58	Avdell, J	...	Assistant Rate Clerk, Traffic Manager's Office, E I R.	E I R House ...	ditto	
*.*59	Avery, W P	...	Accountant, Accountant-General's Office, P W D.	Imperial Secretariat Buildings	ditto	
60	Aviet, J	...	Assistant, Heatly & Gresham, Ld ...	6, Waterloo Street ...	ditto	
	B					
61	Babson, J	...	Clerk, Office of Comptroller-General and Comptroller, India Treasuries.	The Treasury ...	ditto	
62	Bailey, G E	...	Saddler and Harness Maker ...	8-2, Hastings Street ...	ditto	
63	Baker, A	...	Senior Inspector, Hackney Carriage Department, Calcutta Corporation.	Municipal Office ...	ditto	
64	Baker, E W	...	Assistant, Office of Secretary to the Government of India, Finance and Commerce Department.	Treasury Buildings ...	ditto	
65	Baker, R	...	Assistant, Finlay, Muir & Co ...	1, Clive Street, ...	ditto	
66	Baker, W	...	Assistant Printing Superintendent, E I R.	E I R House ...	ditto	
67	Baldwin, W R	...	Assistant, Ralli Brothers ...	1 & 2, Church Lane ...	ditto	
*.*68	Baldwin, T G	...	Clerk, Foreign Office ...	Esplanade, West ...	ditto	
69	Ballantyne, J G	..	Assistant, J Thomas & Co ...	8, Mission Row ...	ditto	
70	Bampton, C E	...	Assistant Superintendent, Office of the Calcutta Port Commissioners.	Strand Road ...	ditto	
*.*71	Baptist, E	...	6th Class Clerk, Office of Secretary to the Government of India, P W D	Imperial Secretariat Buildings	ditto	
72	Baptist, W C	...	Assistant, George Henderson & Co	100, Clive Street ...	ditto	

73	Barber, Fred B	...	Partner, Sinclair and Eck	...	2, Clive Street	... ditto
74	Barber, H S C	...	Assistant, Whiteaway, Laidlaw & Co		4, 5 & 6, Chowringhee	... ditto
75	Barker, W	...	Assistant, Atkinson Brothers, Ld	...	13, Chowringhee	... ditto
76	Barnes, O J	...	Assistant, Hongkong and Shanghai Banking Corporation.		31, Dalhousie Square	... ditto
77	Barnes, T A	...	Assistant, Jessop & Co, Ld	...	93, Clive Street	... ditto
*78	Barrie, K W	...	Clerk, Foreign Office	...	Esplanade, West	... ditto
79	Barron, J	...	Partner, Francis, Harrison, Hathaway & Co.		13, Government Place	... ditto
80	Bartholomew, C P	...	Assistant, Landale & Morgan	...	5, Mission Row	... ditto
*81	Bartlett, A H	...	Clerk, Home Department	...	Home Department	... ditto
82	Bartlett, E	...	Assistant, Great Eastern Hotel Co, Ld.		1, 2 & 3, Old Court House Street.	ditto
83	Barton, Geo.	...	Assistant, Finlay, Muir & Co	...	1, Clive Street	... ditto
*84	Bason, H C	...	5th Class Clerk, Secretariat, Government of India, Public Works Department.		Imperial Secretariat Buildings	ditto
85	Batchelder, F	...	Assistant, Whiteaway, Laidlaw & Co		4, 5 and 6, Chowringhee	... ditto
86	Batchelor, J W	....	Assistant, J A Dykes & Co	...	102, Clive Street	... ditto
87	Bateman, A S	...	Draftsman, Surveyor-General's Office, Drawing Department.		13, Wood Street	... ditto
88	Bates, R G	...	Assistant, J Thomas & Co	...	8, Mission Row	... ditto
89	Batho, G W H	...	Chief Assistant, Calcutta Landing and Shipping Company, Ld.		24, Strand Road	... ditto
90	Baxter, J B	...	General Assistant, Office of the Calcutta Port Commissioners.		Strand Road	... ditto
91	Baxter, R N	...	Assistant, Apcar & Co	...	19, Radha Bazar Street	... ditto
92	Baylee, C W	...	Assistant, David Sassoon & Co, Ld	...	3, Fairlie Place	... ditto
93	Bayley, E C	...	Assistant, Government Medical Store Department, B. C.		8, Wellesley Place	... ditto
94	Bazeley, J F	...	Assistant, T E Thomson & Co, Ld	...	9, Esplanade, East	... ditto
95	Beachcroft, E A	...	Assistant, Cash Department, Bank of Bengal.		Strand	... ditto
96	Beadel, C F	...	Assistant, Becker, Gray & Co	...	7, Hastings Street	... ditto
97	Beadle, J C	...	Assistant, Harnack & Co	...	10 & 10-1, Old Court House Street.	ditto

No.	Names.	Style or Calling.	Residence or place of business.	Religion.	Remarks.
	B				
98	Beaman, C E H	... Assistant, Shaw, Wallace & Co ...	20, Strand Road ...	Christian	
99	Beath, C T	... Assistant Accountant, Mercantile Bank of India, Ld.	28, Dalhouse Square ...	ditto	
100	Beaumont, W C	... Manager, *Statesman* Office ...	3, Chowringhee ...	ditto	
101	Beaver, Geo H	... Managing Partner, Geo Beaver & Co	8-1, Dalhousie Square, East ...	ditto	
102	Beck, N	... Assistant, F & C Osler ...	12, Old Court House Street ...	ditto	
103	Beddoe, H C	... Deputy Jetty Superintendent, Office of the Calcutta Port Commissioners.	Strand Road ...	ditto	
104	Bedford, M P	... Clerk, Calcutta Mint ...	47, Strand Road, North ...	ditto	
105	Bell, C W	... Assistant, Great Eastern Hotel Co, Ld.	1, 2 & 3, Old Court House Street.	ditto	
106	Bell, E J	... Assistant, Alex. Brault & Co ...	3, Waterloo Street ...	ditto	
107	Bell, E W	... Assistant Accountant, Delhi and London Bank, Ld.	4, Council House Street ...	ditto	
108	Bell, J W A	... Assistant, Mackinnon, Mackenzie & Co	16, Strand ...	ditto	
109	Bell, T A	... Assistant, F W Heilgers & Co ...	136, Canning Street ...	ditto	
110	Bellamy, W A	... 5th Class Senior Clerk, Upper Division, Office of Secretary to the Government of India, Military Department.	6, Esplanade, East ...	ditto	
111	Belletty, J R	... Assistant, Bengal Secretariat, Judicial, Political and Appointment Departments.	Writers' Buildings ...	ditto	
112	Belletty, M C	... Head Clerk, Mathematical Instrument Department, Surveyor-General's Office.	15, Wood Street ...	ditto	
113	Benjamin, B H	... Assistant, David Sassoon & Co, Ld ...	3, Fairlie Place ...	Jew	
114	Bennett, A H	... Assistant, Whiteaway, Laidlaw & Co	4, 5 and 6, Chowringhee ...	Christian	
115	Bennett, H C	... Assistant, Mackintosh, Burn & Co ...	8, Esplanade, East ...	ditto	
116	Benson, J	... Assistant, Ahmuty & Co .	6, Church Lane ...	ditto	
117	Berry, M J	... Assistant, Lovelock & Lewes ...	25, Mangoe Lane ...	ditto	
118	Bibra, E V	... Assistant, Cooke & Kelvey ...	20, Old Court House Street ...	ditto	
119	Bindloss, E H	... Partner, Bindloss & Co ...	2, Commercial Buildings ...	ditto	
120	Binning, F J	... Assistant, J Thomas & Co ...	8, Mission Row ...	ditto	
121	Birch, R W	... Assistant, Kiernander & Co ...	7-1, Lyons Range	ditto	

122	Bird, F H	...	Firm of Frank H Bird & Co ...	167, Canning Street	...	ditto
123	Bird, H L	...	2nd Superintendent, Excise Preventive Establishment, Calcutta Collectorate.	3, Charnock Place	...	ditto
124	Bishop, E M	...	Assistant, Hongkong and Shanghai Banking Corporation	31, Dalhousie Square	...	ditto
125	Bishop, W E	...	Manager, Traill & Co ...	20, British Indian Street	...	ditto
126	Black, E J	..	3rd Grade Accountant, Office of Controller of Military Accounts, E C.	3, Koila Ghât Street	...	ditto
127	Black, J	...	Assistant, Shaw, Wallace & Co ...	20, Strand Road	...	ditto
128	Black, J C	...	Assistant, Martin & Co ...	Jackson House	...	ditto
129	Black, O E	...	Jr. 1st Class Clerk, Lower Division, Office of Secretary to the Government of India, Military Department.	6, Esplanade, East	...	ditto
130	Blackburn, G A	...	Assistant, Grossmann & Co ..	2, Fairlie Place	...	ditto
131	Blackburn, H P	...	Assistant, Mitchell, Bardsley & Co..	5, Clive Ghât Street	...	ditto
132	Blainville, R N	...	Assistant, Shaw, Wallace & Co ...	20, Strand Road	...	ditto
133	Blake, C S	...	Partner, Lemon, Blake & Co ...	3-1, Wellesley Place	...	ditto
134	Blake, J H	...	Electric Engineer, Walter, Locke & Co, Ld.	4, Esplanade	...	ditto
*,*135	Blaker, R H	...	Superintendent, Home Department...	Home Department	...	ditto
*,*136	Blaker, S A	...	Superintendent, Foreign Office ...	Esplanade, West	...	ditto
137	Bland, G E	...	Assistant, Balmer, Lawrie & Co ...	103, Clive Street	...	ditto
*,*138	Blewitt, E W	...	Clerk, Home Department .	Home Department	...	ditto
139	Blick, F	...	Assistant, Martin & Co ...	Jackson House	...	ditto
140	Blond, F	...	Accountant, 3rd grade, Office of Examiner of Ordnance and Clothing Branches.	Military Accounts Department Buildings, Koila Ghât Street.		ditto
141	Blount, N	...	Chief Accountant, Commercial Bank of India, Ld	5, Fairlie Place	...	ditto
142	Blumenthal, F	...	Assistant, Blackwood, Blackwood & Co.	12, Clive Street	...	ditto
143	Blyth, A A	...	Head Clerk, Office of Reporter on Economic Products to the Government of India.	1, Sudder Street	...	ditto
144	Blythe, H J	...	Hackney Carriage Inspector, Calcutta Corporation.	Municipal Office	...	ditto

No.	Names.	Style or Calling.	Residence or place of business.	Religion.	Remarks.
	B				
**145	Bolst, H G	... Assistant, Office of Secretary to the Government of India, Revenue and Agricultural Department, Forest Branch.	Imperial Secretariat Buildings	Christian.	
146	Bolton, C G	... Printer, Mackenzie, Lyall & Co ...	2, Lyons Range ...	ditto	
**147	Bonnaud, E A	... 6th class Clerk, Office of Secretary to the Government of India, P W D.,	Imperial Secretariat Buildings	ditto	
**148	Bonnaud, W A	... Assistant, Bengal Office, Judicial, Political and Appointment Departments.	Writers' Buildings ...	ditto	
149	Booth, C W	... Assistant, Bathgate & Co ...	19, Old Court House Street ...	ditto	
150	Booth, H	... Manager, Struthers & Co, Ld ...	28, Strand Road ...	ditto	
151	Botellho, C W	... Assistant, R S Hart Brothers ...	157, Dhurrumtollah Street ...	ditto	
152	Botten, E E	... Assistant, Macneill & Co ...	2, Clive Ghât Street ...	ditto	
**153	Bowder, F H	... Clerk, Office of Accountant-General, Public Works Department.	Imperial Secretariat Buildings	ditto	
**154	Bowder, J K E	... Superintendent, Office of Secretary to the Government of India, Revenue and Agricultural Department, Emigration Branch.	Imperial Secretariat Buildings	ditto	
155	Bowrey, E W	... Assistant, McLeod & Co ...	31, Dalhousie Square ...	ditto	
156	Bowyer, G F	... Assistant, Grand Hotel ...	16, Chowringhee ...	ditto	
157	Boyd, G D	... Measurer, Licensed Measurers' Department, Bengal Chamber of Commerce.	2, Clive Street ...	ditto	
158	Boyd, H W	... Assistant, O Steel & Co ...	14, Old Court House Street ...	ditto	
159	Boyes, J R	... Sub-Accountant, Hongkong and Shanghai Banking Corporation.	31, Dalhousie Square ...	ditto	
160	Bradey, G W C	... Assistant, Office of Secretary to the Government of India, Finance and Commerce Department.	Treasury Buildings ...	ditto	
161	Braithwaite, W D	... Assistant, Shaw, Wallace & Co ...	20, Strand Road ...	ditto	
162	Brakenridge, D H	... Assistant, J C Duffus & Co ...	10, Clive Row ...	ditto	
163	Brame, Captain A	... Marine Superintendent, I G N & Ry Co.	4, Fairlie Place ...	ditto	
164	Bramham, J	... Assistant, J B Norton & Sons ...	1, Old Court House Corner ...	ditto	
165	Brandon, H	... Assistant, Grand Hotel ...	16, Chowringhee ...	ditto	

166	Bray, E H	...	Assistant, Gillanders, Arbuthnot & Co	8, Clive Street	...	ditto
167	Bremner, W F	...	Assistant, Turner, Morrison & Co ...	6, Lyons Range	...	ditto
168	Bretton, G A	...	Assistant, Macneill & Co ...	2, Clive Ghât Street	...	ditto
169	Brewer, H	...	Assistant, Thos Cook & Son ...	9, Old Court House Street	...	ditto
170	Bridgnell, Chas	...	Assistant, F Kapp & Co ...	3, Humayon Place	...	ditto
**171	Brinkworth, W J	...	5th Class Clerk, Secretariat, Government of India, Public Works Department.	Imperial Secretariat Buildings		ditto
172	Brodie, J S	...	Assistant, Andrew Yule & Co ...	7, Clive Row	...	ditto
173	Brodie, Wm G	...	Assistant, Andrew Yule & Co ...	Ditto	...	ditto
174	Bromley, H T	...	City Architect and Building Surveyor, Municipal Office.	5, Corporation Street	...	ditto
175	Brookes, A S	...	Assistant, Thacker, Spink & Co ...	5, Government Place	...	ditto
176	Brown, A	...	Accountant, Alliance Bank of Simla, Limited.	8, Council House Street	...	ditto
177	Brown, H	...	Assistant, Jessop & Co, Ld ...	93, Clive Street	...	ditto
178	Brown, P H	...	Assistant, Mackinnon, Mackenzie & Co	16, Strand	...	ditto
179	Browne, A A	...	Assistant, Army and Navy Co-operative Society, Ld.	41, Chowringhee	...	ditto
180	Browne, T H L	...	Assistant, O Steel & Co ...	14, Old Court House Street	...	ditto
181	Browne, W H	...	Architect, Martin & Co ...	Jackson House	...	ditto
182	Bruce, A F	...	Assistant, J Thomas & Co ...	8, Mission Row	...	ditto
183	Bruce, A M	...	Accountant, Hongkong and Shanghai Banking Corporation.	31, Dalhousie Square	...	ditto
184	Bruce, W H	...	Assistant, Kilburn & Co ...	4, Fairlie Place	...	ditto
185	Buckland, F M	...	Assistant, Jardine Skinner & Co ...	4, Clive Row	...	ditto
**186	Buckner, F P	...	Clerk, Foreign Office ...	Esplanade, West	...	ditto
**187	Budd, R S	...	Assistant, Bengal Secretariat, Judicial, Political and Appointment Departments.	Writers' Buildings	...	ditto
188	Bull, H F	...	Assistant, Anderson, Wright & Co ...	22, Strand Road	...	ditto
189	Bull, H S	...	Assistant, Bombay Co, Ld ...	7-1, Lyons Range	...	ditto
190	Bulley, W	...	Assistant, Mackintosh, Burn & Co ...	8, Esplanade, East	...	ditto

No.	Names.	Style or Calling.	Residence or place of business.	Religion.	Remarks.
	B				
191	Burbidge, A	... Assistant, Traffic Manager, E I R ...	E I R House ...	Christian	
192	Burbidge, F W	... Assistant, Kilburn & Co ...	4, Fairlie Place ...	ditto	
193	Burbidge, G C	... Assistant, John King & Co, Ld ...	40, Strand ...	ditto	
*.*194	Burbridge, R P D	.. 3rd Class Clerk, Office of Secretary to the Government of India, Public Works Department.	Imperial Secretariat Buildings	ditto	
195	Burgess, A	... Assistant, J Thomas & Co ...	8, Mission Row ...	ditto	
196	Burgess, R	... Assistant, Francis, Harrison, Hathaway & Co	13, Government Place, East ...	ditto	
197	Burke, W S	... Proprietor, *Indian Field* ...	1, Hare Street ...	ditto	
198	Burrell, A St L M	... Assistant Examiner, Office of Controller of Military Accounts, Accounts Branch, E. C.	3, Koila Ghât Street ...	ditto	
199	Burress, W G	... Examiner, Office of Superintendent, Government Printing, India.	8, Hastings Street ...	ditto	
200	Burrows, L B	... Assistant, Office of Secretary to the Government of India, Finance and Commerce Department.	Treasury Buildings ...	ditto	
201	Bury, J	... Manager, Erasmus Jones ...	5, British Indian Street ...	ditto	
202	Bushby, F E	... Assistant, Steuart & Co ...	8, Old Court House Corner ...	ditto	
203	Butchart, J	... Assistant, Shrager Brothers ...	28, Dalhousie Square ...	ditto	
204	Butland, J	... Assistant, Whiteaway, Laidlaw & Co	4, 5 & 6, Chowringhee ...	ditto	
205	Butler, J	... Engineer, Oriental Telephone and Electric Co, Ld.	7, Pollock Street ...	ditto	
206	Butler, J A	... Ditto ...	Ditto ...	ditto	
	C				
207	Caird, G	... Assistant, Jessop & Co, Ld ...	93, Clive Street ...	ditto	
208	Calderwood, D Y	... Cashier, John Dewar & Sons, Ld ...	10, Hare Street ...	ditto	
209	Caldwell, J	... Assistant Auditor, E I R ...	E I R House ...	ditto	
210	Cameron, A P	... Assistant, Manager, James Simpson & Co, Ld.	32-1, Dalhousie Square ...	ditto	

*.*211	Cameron, C A	...	Assistant, Office of Secretary to Government of India, Revenue and Agricultural Department, Revenue Branch.	Imperial Secretariat Buildings	ditto
212	Cameron, D	...	Assistant, Struthers & Co, Ld ...	28, Strand Road ...	ditto
213	Cameron, J B	...	Assistant, Army & Navy Co-operative Society, Ld.	41, Chowringhee ...	ditto
214	Campagnac, W	...	Head Clerk, Mathematical Instrument Department, Surveyor-General's Office.	15, Wood Street ...	ditto
215	Campbell, C G	...	Gate Officer, Office of the Calcutta Port Commissioners.	Strand Road ...	ditto
*.*216	Campbell, H A C	...	4th Class Clerk, Office of Secretary to the Government of India, Public Works Department.	Imperial Secretariat Buildings	ditto
227	Campbell, J	...	Assistant, Mackinnon, Mackenzie & Co.	16, Strand ...	ditto
218	Campbell, J C	...	Assistant, Mackenzie, Lyall & Co ...	2, Lyons Range ...	ditto
219	Campbell, K	...	Assistant, Shaw, Wallace & Co ...	20, Strand Road ...	ditto
220	Campbell, T J	...	Assistant, G E Hotel Co, Ld ...	1, 2 & 3, Old Court House Street.	ditto
221	Cann, A E W	...	Engraver, Surveyor-General's Office, Engraving Department.	13, Wood Street ...	ditto
222	Cantopher, R	...	2nd Assistant to Mint Master ...	Strand ...	ditto
*.*223	Cantopher, R A	...	Examiner and Copyist, Home Department.	Home Department ...	ditto
*.*224	Carey, W C	...	7th Class Clerk, Secretariat, Government of India, P W D.	Imperial Secretariat Buildings	ditto
225	Carr, C A	...	Assistant, P & O S N Co ...	19, Strand Road ...	ditto
226	Carr, H W	...	Assistant, Balmer, Lawrie & Co ...	103, Clive Street ...	ditto
*.*227	Carr, W B	...	Jr. 3rd Class Clerk, Lower Division, Office of Secretary to the Government of India, Military Department.	6, Esplanade, East ...	ditto
228	Carritt, Chas	...	Managing Proprietor, *Indian Planting and Gardening.*	5-1, Council House Street ...	ditto

No.	Names.	Style or Calling.	Residence or place of business.	Religion.	Remarks.
	O				
229	Carroll, A J M ...	Assistant, Public Debt Office, Bank of Bengal.	Strand ...	Christian	
230	Carter, G H ...	Assistant, Andrew Yule & Co ...	7, Clive Row ...	ditto	
231	Carter, R ...	Assistant, Pigott, Chapman & Co ...	1, Mission Row ...	ditto	
232	Carter, R S ...	Assistant, Thacker, Spink & Co ...	5, Government Place ...	ditto	
233	Carter, W J ...	Assistant, G F Kellner & Co ...	32, Chowringhee ...	ditto	
234	Carville, A B ...	Clerk, Photographic and Lithographic Department, Surveyor-General's Office.	14, Wood Street ...	ditto	
235	Cassie, G J ...	Assistant Manager, Marshall Sons & Co, Ld.	99, Clive Street ...	ditto	
*236	Caston, H P ...	Clerk, Foreign Office ...	Esplanade, West ...	ditto	
237	Chalmers, Jas. ...	Assistant, Mackinnon, Mackenzie & Co.	16, Strand ...	ditto	
238	Chambers, James Richard...	Assistant, Bengal Secretariat, Financial Department.	Writers' Buildings ...	ditto	
*239	Chambers, T ...	7th Class Clerk, Secretariat, Government of India, P W D.	Imperial Secretariat Buildings	ditto	
*240	Channon, F ...	Jr. 1st Class Clerk, Lower Division, Office of Secretary to the Government of India, Military Department.	6, Esplanade, East ...	ditto	
241	Chaplin, J ..	Assistant, Thacker, Spink & Co ...	5, Government Place ...	ditto	
242	Chermside, H L ...	Assistant, Turner, Morrison & Co ...	6, Lyons Range ...	ditto	
243	Christensen, J A ...	Assistant, Davis Leech & Co ...	11, Government Place ...	ditto	
244	Christie, A J W ...	Assistant, Hoare, Miller & Co ...	38, Strand Road ...	ditto	
245	Chubb, R W ...	Assistant, Francis, Harrison, Hathaway & Co.	18, Government Place, East ...	ditto	

246	Clark, C S	...	Assistant, Branch Department, Bank of Bengal.	Strand	...	ditto
247	Clark, H J	...	Assistant Controller of Stores, E I R	E I R House	...	ditto
248	Clarke, A L	...	Assistant, Mackenzie, Lyall & Co ...	2, Lyons Range	...	ditto
**249	Clarke, D A	...	Clerk, Foreign Office ...	Esplanade, West	...	ditto
250	Clarke, F G	...	Assistant, O Steel & Co ...	14, Old Court House Street	...	ditto
251	Clarke, H	...	Assistant, Lovelock and Lewes ...	25, Mangoe Lane	...	ditto
252	Clarkson, W B	...	Assistant, R S Hart Brothers ...	157, Dhurrumtollah Street	...	ditto
253	Claudius, J E	...	Assistant, Board of Revenue, L P ...	2, Bankshall Street	...	ditto
254	Cleeve, T G	...	Assessor of Income-tax ...	3, Charnock Place	...	ditto
255	Clifford, W B	...	Engineer, Davidson & Co, Ld ...	2, Lall Bazar	...	ditto
256	Coard, A R	...	Assistant Head Engraver, Surveyor-General's Office, Engraving Department.	13, Wood Street	...	ditto
257	Coard, S M	...	Head Engraver, Surveyor-General's Office, Engraving Department.	13, Wood Street	...	ditto
**258	Coates, G M	...	Clerk, Foreign office ...	Esplanade, West	...	ditto
259	Coates, S H	...	Assistant, Lovelock and Lewes ...	25, Mangoe Lane	...	ditto
260	Cockell, C F	...	Assistant, Allen Brothers & Co ...	1, New China Bazar Street	...	ditto
261	Cockell, N F	...	Assistant, Mackinnon, Mackenzie & Co	16, Strand	...	ditto
262	Cockell, N P	...	Assistant Accountant, Alliance Bank of Simla, Ld.	8, Council House Street	...	ditto
263	Cohen, A A	...	Proprietor, Aaron A Cohen & Co .	219, Old China Bazar Street	...	Jew
264	Cohen, S R S	...	Assistant, E D Sassoon & Co ...	2 & 3, Clive Row	...	Hebrew
265	Colder, R C D	...	3rd grade Accountant, Office of Examiner, P W Accounts, Bengal.	8, Lyons Range	...	Christian
266	Cole, William	...	Manager, Lampard, Clark & Co	1, Lall Bazar	...	ditto
267	Coleman, E	...	Assistant, Davenport & Co ...	101-1, Clive Street	...	ditto
268	Colley, T H	...	Boiler Inspector, Office of the Commissioners for the Inspection of Steam-boilers.	309, Bow Bazar Street	...	ditto
269	Collier F	...	Assistant, British American Tobacco Company, Ld.	95, Clive Street	...	ditto
270	Collier, G B	...	Assistant, Ralli Brothers ...	1 & 2, Church Lane	...	ditto
271	Collingridge, H	...	Assistant, Finlay Muir & Co ...	1, Clive Street	...	ditto

No.	Names.	Style or Calling.	Residence or place of business.	Religion.	Remarks.
	C				
272	Collingwood, A F ...	Assistant, Government Medical Store Department, B. C.	8, Wellesley Place ...	Christian	
273	Collingwood, C H ...	Assistant, Whiteaway, Laidlaw & Co.	300, Bow Bazar Street ...	ditto	
274	Collins, C ...	Senior Assistant Auditor, E I R ...	E I R House ...	ditto	
275	Collins, H ...	Assistant, Whiteaway, Laidlaw & Co	4, 5 & 6, Chowringhee ...	ditto	
276	Collins, H W ...	Audit Inspector, E I R ...	E I R House ...	ditto	
277	Collins, H W S ...	Assistant, Ralli Brothers ...	1 & 2, Church Lane ...	ditto	
278	Collins, P A ...	Clerk, Home Department ...	Home Department ...	ditto	
279	Collins, P W ...	Clerk, Foreign office ...	Esplanade, West ...	ditto	
280	Collins, S A ...	Assistant, Office of Secretary to the Government of India, Legislative Department.	Legislative Department Office, 5, Esplanade, West.	ditto	
281	Collins, W T ...	Head Copper-plate Printer, Engraving Department, Surveyor-General's Office.	13, Wood Street ...	ditto	
282	Colquhoun, J A ...	Mechanical Assistant, Engineering Department, E I R.	E I R House ...	ditto	
283	Colthurst, C L E ...	Accountant, Audit Department, E I R	Ditto ...	ditto	
284	Colthurst, L S ...	Head Accountant, Booking Section, Audit Department, E I R.	E I R House ...	ditto	
285	Colville, G S E ...	Assistant, J Thomas & Co ...	8, Mission Row ...	ditto	
286	Conway, A ...	Assistant, Allen Brothers & Co ...	1, New China Bazar Street ...	ditto	
287	Conway, A P ...	Assistant, Ralli Brothers ...	1 & 2, Church Lane ...	ditto	
288	Cook, H M ...	Assistant, Standard Life Assurance Co.	32, Dalhousie Square ...	ditto	
289	Cooke, A B ...	Assistant Accountant, Delhi & London Bank, Ld.	4, Council House Street ...	ditto	
290	Cooke, L ...	Assistant, New York Life Insurance Co	8, Old Court House Street ...	ditto	

291	Cooper, A J	...	Accountant, Audit Department, E I R	E I R House	... ditto
292	Cooper, C A	...	Clerk, Store Department, E I R ...	Ditto	... ditto
293	Corfield, W W	...	Assistant, Lovelock and Lewes ...	25, Mangoe Lane	... ditto
294	Corneleaz, A E	...	Superintendent, Jetty Collection Department, Office of the Calcutta Port Commissioners.	Strand Road	... ditto
295	Cornelius, K	...	Assistant, Reuter's Telegram Co, Ld	102, Clive Street	... ditto
296	Corrie, T E	...	Assistant, King Brothers ...	102 Clive Street	... ditto
297	Cottle, J	...	Partner, Morrison and Cottle ...	2, Esplanade Row, East	... ditto
298	Coulthard, J B	...	Assistant, Mackenzie, Lyall & Co ...	2, Lyons Range	... ditto
299	Counsell, E	...	Clerk, Office of Consulting Engineer to the Government of India for Railways.	E I R House	... ditto
300	Counsell, Herbert James	...	Assistant, Bengal Secretariat, Financial Department.	Writers' Buildings	... ditto
301	Counsell, S H	...	Assistant, Judicial, Political and Appointment Departments, Bengal Secretariat.	Ditto	... ditto
302	Coutto, J A	...	Assistant, Office of Inspector-General of Police, L. P.	Ditto	... ditto
303	Cowan, W D	...	Assistant, Jardine, Skinner & Co ...	4, Clive Row	... ditto
304	Craddock, W M	...	Assistant Accountant, Dehli and London Bank, Ld.	4, Council House Street	.. ditto
305	Crase, P A	...	Assistant, Royal Insurance Co ...	26-27, Dalhousie Square	... ditto
306	Crawford, Alex	...	Assistant, Birkmyre Brothers ...	6, Clive Row	... ditto
307	Crawford, W	...	Assistant, Balmer, Lawrie & Co ...	103, Clive Street	... ditto
308	Craymer, S B	...	Assistant, Ralli Brothers ...	1 & 2, Church Lane	... ditto
309	Creagh, J R	...	Assistant, Bombay Company, Ld ...	7-1, Lyons Range	... ditto
310	Creed, F C	...	Assistant, Government Medical Store Department, B. C.	8, Wellesley Place	... ditto

No.	Names.	Style or Calling.	Residence or place of business.	Religion.	Remarks.
	C				
311	Creaswell, J ...	Assistant, Harman & Co ...	12, Government Place ...	Christian	
312	Crimmin, C ...	Assistant, Ralli Brothers ...	1 & 2, Church Lane ...	ditto	
313	Critchley, C E B ...	Assistant Secretary to Agent, E I R	E I R House ...	ditto	
314	Cross, W A ...	Manager, W. Newman & Co ...	4, Dalhousie Square ...	ditto	
*.*315	Crosse, C H ...	Superintendent, Foreign office	Esplanade, West ...	ditto	
*.*316	Crow, S E ...	5th Class Clerk, Secretariat, Government of India, Public Works Department.	Imperial Secretariat Buildings	ditto	
317	Crowder, M ...	Manager, W Crowder & Co ...	12, Hare Street ...	ditto	
318	Cruden, D A C ...	Assistant, Gillanders, Arbuthnot & Co.	8, Clive Street ...	ditto	
319	Cruickshank, G ...	Assistant, C Lazarus & Co ...	60, Bentinck Street ...	ditto	
320	Cubitt, J E ...	Assistant, J Thomas & Co ...	8, Mission Row ...	ditto	
321	Culbert, P ...	Assistant, W Leslie & Co ..	2, Chowringhee ...	ditto	
322	Cumberlege, B C ...	Passing Officer, Bank of Bengal ...	Strand ...	ditto	
323	Cunliffe, A E ...	Secretary, Great Eastern Hotel Co, Ld.	1, 2 & 3, Old Court House Street.	ditto	
324	Cunningham, J A ...	Education Service, Presidency College	College Square ...	ditto	
325	Cunningham, W W ...	Assistant, Bird & Co ...	101-1, Clive Street ...	ditto	
326	Currie, F ...	School Master, Armenian College ...	Armenian College ...	ditto	
327	Currie, J H ...	Receipt Inspector, Office of the Calcutta Port Commissioners.	Strand Road ...	ditto	
328	Curtis, H ...	Assistant, Graham & Co ...	9, Clive Street ...	ditto	
329	Curtis, H ...	Shed Officer, Office of the Calcutta Port Commissioners.	Strand Road ...	ditto	

330	Cuthbert, D A	...	Assistant Accountant, National Bank of India, Ld.	104, Clive Street ...	ditto
331	Cutler, P R	...	Assistant, Hall & Anderson ...	31, Chowringhee ...	ditto
332	Cuttriss, C A	...	Assistant, *Statesman* Office ...	3, Chowringhee ...	ditto
333	Cutts, R	...	Assistant, Francis, Harrison, Hathaway & Co.	13, Government Place, East ...	ditto
334	Cuyper, T G	...	Proprietor, T G Cuyper ...	3 & 4, Metcalfe Street ...	ditto
	D				
**335	D'Abreu, W F	...	4th Class Clerk, Secretariat, Government of India, P W Dept.	Imperial Secretariat Buildings	ditto
336	D'Costa, F	...	Assistant, Ernsthausen, Ld ...	9, Clive Row ...	ditto
337	D'Costa, W M	...	Reader, Bengal Secretariat Press ...	Writers' Buildings ...	ditto
338	D'Cruz, H A	...	Junior 4th Class Clerk, Lower Division, Office of Secretary to the Government of India, Military Department.	6, Esplanade, East ...	ditto
339	D'Cruz, H E	...	License Officer, Municipal Office ...	Municipal Office ...	ditto
340	D'Cruz, J A	...	2nd Class Assistant, Office of Controller of Military Accounts, E C, Supply and Transport Branch.	3, Koila Ghât Street ..	ditto
341	D'Cruz, M	...	Clerk, Store Department, E. I. R. ...	E. I. R. House ..	ditto
342	D'Cruz, W W	...	4th grade Clerk, Office of Examiner of Ordnance Factory Accounts in India.	1, Koila Ghât Street ...	ditto
343	D'Cruze, J	...	Accountant, Bengal Central Railway	159, Bow Bazar Street ...	ditto
**344	D'Eca, B A	...	Clerk, Home Department ...	Home Department ...	ditto
345	D'Pyvah, E	...	Assistant, Litho. Printer, Surveyor-General's Office.	14, Wood Street ...	ditto
346	D'Rozario, E	...	Superintendent, Municipal Press ...	Municipal Office ...	ditto
347	D'Rozario, F A	...	Temporary Clerk, Fluctuating Establishment, Surveyor-General's Office.	13, Wood Street ...	ditto
**348	D'Rozario, V	...	Clerk, Foreign Office ...	Esplanade, West ...	ditto
349	D'Santos, A C	...	Measurer, Licensed Measurers' Department, Bengal Chamber of Commerce.	2, Clive Street ...	ditto

No.	Names.	Style or calling.	Residence or place of business.	Religion.	Remarks.
	D				
*.*350	D'Santos, L J	... Superintendent, Home Department	Home Department ...	Christian	
351	D'Silva, A	... Assistant, Office of Inspector-General of Police, L. P.	Writers' Buildings ...	ditto	
*.*352	D'Silva, F L	... Clerk, Foreign Office ...	Esplanade, West ...	ditto	
353	D'Silva, J	... Assistant Litho. Printer, Surveyor-General's Office	14, Wood Street ...	ditto	
354	D'Silva, J A	... Chief Clerk, Port Office ...	15-1, Strand Road ...	ditto	
355	D'Silva J S	... Head Clerk, Imperial Library, Metcalfe Hall.	Hare Street ...	ditto	
356	D'Silva, Walter	... Head Clerk, Office of Inspector of European Schools, Bengal.	12, Dalhousie Square ...	ditto	
*.*357	D'Souza, J R	... 5th Class Clerk, Secretariat, Government of India, P. W. Dept	Imperial Secretariat Buildings	ditto	
358	DaCosta, A G	... Assistant Superintendent, Traffic Department, E I R.	E I R House ...	ditto	
*.*359	DaCosta, E H	... Assistant, Office of Secretary to the Government of India, Revenue and Agricultural Department, Revenue Branch.	Imperial Secretariat Buildings	ditto	
360	DaCosta, E W	... Assistant, South British Fire and Marine Insurance Co.	1, Lall Bazar ...	ditto	
361	Dahne, F C	... Architectural Draftsman, Engineering Department, E I R.	E I R House ...	ditto	
362	Dale, A S	... Manager, West End Watch Co ...	14, Dalhousie Square ...	ditto	
363	Dalglish, R	... Assistant, Anderson, Wright & Co ...	22, Strand ...	ditto	
364	Dalling, D	... Assistant, W. Leslie & Co ...	2, Chowringhee ...	ditto	
365	Dalton, F E	... Assistant, Public Debt Office, Bank of Bengal.	Strand ...	ditto	
366	Dame, J M	... Assistant, Graham & Co ...	9, Clive Street ...	ditto	
367	Damiano, N	... Assistant, Ralli Brothers ...	1 & 2, Church Lane ...	ditto	
368	Daniel, A	... Receipt Inspector, Office of the Calcutta Port Commissioners.	Strand Road ...	ditto	
369	Daniel, J E	... Assistant, Partridge & Co ...	22, Chowringhee ...	ditto	
370	Daniel, W P	... Assistant, Meugens, King and Simson	102, Clive Street ...	ditto	

371	Danks, E A	...	Assistant, King, Hamilton & Co	...	7, Hare Street	... ditto
372	Danks, H A	...	Ditto ditto	...	ditto	... ditto
373	Darby, G S	...	Assistant Engineer, Office of the Calcutta Port Commissioners.		Strand Road	... ditto
374	Daubeny, A C	...	Assistant, Halford, Smith & Co.	...	1, Mission Row	... ditto
375	Davey, G F	...	Assistant, Army and Navy Co-operative Society, Ld.		41, Chowringhee	... ditto
376	Davidson, H	...	Assistant, H. Clark & Co	...	5, Old Court House Street	... ditto
377	Davidson, O E	...	Assistant, R S Hart Brothers	...	157, Dhurrumtollah Street	... ditto
378	Davie, Alexander	...	Assistant, Mackenzie, Lyall & Co	...	2, Lyons Range	... ditto
379	Davies, T C	...	Assistant, Francis, Harrison, Hathaway & Co.		13, Government Place, East	... ditto
380	Davies, W E	...	Accountant, Cutler, Palmer & Co	...	1, Hastings Street	... ditto
**381	Davis, C	...	Accountant, Accountant-General's Office, Public Works Department.		Imperial Secretariat Buildings	ditto
382	Davis, C H	...	Assistant, Army and Navy Co-operative Society, Ld.		41, Chowringhee	... ditto
383	Dawes, S H'O	...	Assistant, W Leslie & Co	...	2, Chowringhee	... ditto
384	Dawson, J W	...	Assistant Accountant, National Bank of India, Ld.		104, Clive Street	... ditto
385	Day, C H	...	Assistant, G F Kellner & Co	...	32, Chowringhee	... ditto
386	Day, F H	...	Assistant, Octavius Steel & Co	...	14, Old Court House Street	... ditto
**387	Day, R A	...	Clerk, Office of Accountant-General, Public Works Department.		Imperial Secretariat Buildings	ditto
388	Deacon, H C	...	Assistant, Hall & Anderson	...	31, Chowringhee	... ditto
389	Deas, D	...	Assistant Litho. Printer, Surveyor-General's Office.		14, Wood Street	... ditto
**390	Debenham, W C	...	6th Class Senior Clerk, Upper Division, Office of Secretary to the Government of India, Military Department.		6, Esplanade, East	... ditto
391	DeBretton, L	...	Assistant, Becker, Gray & Co	...	7, Hastings Street	... ditto
392	Deefholts, J E	...	Pipe-layer, District Engineer's Office, District No. III, Municipal Office.		10, Sudder Street	... ditto

No.	Names.	Style or Calling.	Residence or place of business.	Religion.	Remarks.
	D				
393	Deeks, W G	... Assistant, Cooke and Kelvey ...	20, Old Court House Street ...	Christian	
**394	DeMello, H R	... 1st Class Clerk, Accountant-General's Office, Military Department.	6, Esplanade, East ...	ditto	
395	Demitriadi, C C	... Assistant, Ralli Brothers ...	1 & 2, Church Lane ...	ditto	
396	Demitriadi, S C	... Ditto ...	Ditto ...	ditto	
397	Denton, P N	... Assistant, Hamilton & Co ...	8, Old Court House Street ...	ditto	
398	DeSanges, A	... Head Assistant, H. M's. Department, Office of the Calcutta Port Commissioners.	Strand Road ...	ditto	
399	Desbruslais, C E	... Superintendent, Comptroller-General's Office.	The Treasury ...	ditto	
400	DeSouza, A	... Clerk, Comptroller-General's Office ...	The Treasury ...	ditto	
401	Dessa, W St J	... Assistant, Harold & Co ...	3, Dalhousie Square ...	ditto	
402	DeSt Croix, H	... Assistant, Dykes & Co ...	29, Waterloo Street ...	ditto	
403	Deveria, H A	... Assistant, Mitchell, Bardsley & Co ...	5, Clive Ghât Street ...	ditto	
404	Deverine, H G	... Measurer, Licensed Measurers' Department, Bengal Chamber of Commerce.	2, Clive Street ...	ditto	
**405	Devine, F	... Clerk, Home Department ...	Home Department ...	ditto	
406	Dewing, F G	... Assistant, Lyall, Marshall & Co ...	25, Mangoe Lane ...	ditto	
407	Dias, A M	... Measurer, Licensed Measurers' Department, Bengal Chamber of Commerce.	2, Clive Street ...	ditto	
408	Dias, E	... Assistant, Bengal Secretariat, Public Works Department.	Writers' Buildings ...	ditto	
409	[illegible], P J	... Assistant to the Officer in charge of Records of the Government of India.	Government Place, West ...	ditto	
410	Dick, H W	... Assistant Accountant, National Bank of India, Ld.	104, Clive Street ...	ditto	
411	Dickinson, H W	... Assistant, Finlay, Muir & Co ...	1, Clive Street ...	ditto	
412	Dickson, R	... Assistant, Gladstone, Wyllie & Co	101, Clive Street ...	ditto	

413	Diggory, S L	Assistant, Balmer, Lawrie & Co	103, Clive Street	...	ditto
414	Dighton, J L	Head Assistant, His Majesty's Assay Office.	47-1, Strand	...	ditto
**415	Dinwiddie, A	5th Class Clerk, Secretariat, Government of India, Public Works Department.	Imperial Secretariat Buildings		ditto
416	Dissent, A	Professor, Doveton College	41, Free School Street	...	ditto
417	Dixon, P S	Assistant, W Leslie & Co	2, Chowringhee	...	ditto
**418	Dobson, S H	Clerk, Accountant-General's Office, Public Works Department.	Imperial Secretariat Buildings		ditto
419	Dods, W K	Accountant, Hongkong and Shanghai Banking Corporation.	31, Dalhousie Square	...	ditto
**420	Dodsworth, P T L	Clerk, Foreign Office	Esplanade, West	...	ditto
**421	Dollman, W G	ditto	ditto	...	ditto
422	Donovan, W	Manager, Oriental Telephone and Electric Co, Ld.	7, Pollock Street	...	ditto
423	Doran, H F	Assistant, Mackinnon, Mackensie & Co.	16, Strand	...	ditto
424	Doris, E	Record-keeper, Agent's Office, E I R	E I R House	...	ditto
425	Dover, A H	Measurer, Licensed Measurers' Department, Bengal Chamber of Commerce.	2, Clive Street	...	ditto
426	Dover, E W	Assistant Controller of Military Accounts, E C.	3, Koila Ghât Street	...	ditto
427	Dover, J C	Assistant, Martin & Co	Jackson House	...	ditto
428	Dover, O C	Assistant, Traill & Co	20, British Indian Street	...	ditto
429	Dover, P J	Measurer, Licensed Measurers' Department, Bengal Chamber of Commerce.	2, Clive Street	...	ditto
**430	Dover, R W	Deputy Examiner, 2nd grade, Office of Accountant-General, Military Department.	6, Esplanade Row, East	...	ditto
431	Dovetil, C N	Assistant, Bird & Co	101-1, Clive Street	...	ditto
**432	Dowling, E	Draftsman, 1st class, Office of Secretary to the Government of India, Public Works Department.	Imperial Secretariat Buildings		ditto

No.	Names.	Style or Calling.	Residence or place of business.	Religion.	Remarks.
	D				
433	Downes, E	... Assistant, Army and Navy Co-operative Society, Ld.	41, Chowringhee ...	Christian	
434	Downing, J T	... Incorporated Accountant, A. P. Stockwell & Co.	14-2, Sudder Street ...	ditto	
435	Doxey, F	... Assistant, Barlow & Co ...	37, Strand Road ...	ditto	
436	Doyle, J F	... Assistant, W Newman & Co ...	4, Dalhousie Square ...	ditto	
437	Dozey, C E	... Chief Clerk, Shipping Office ...	15-1, Strand Road ...	ditto	
438	Dozey, E C	... Head Assistant, Office of the Agent for Government Consignments.	5, Strand Road ...	ditto	
439	Dozey, E C	... Superintendent, Accountant-General's Office, Bengal.	The Treasury ...	ditto	
**440	Dracup, R H	... 2nd Class Clerk, Secretariat, Government of India, Public Works Department.	Imperial Secretariat Buildings	ditto	
441	Drew, A T	... Assistant, George Henderson & Co ...	100, Clive Street ...	ditto	
442	Ducat, F G W	... Assistant, Mackinnon, Mackenzie & Co	16, Strand ...	ditto	
443	Ducat, W F	... Assistant, Gillanders, Arbuthnot & Co	8, Clive Street ..	ditto	
**444	DuCroix, C J	... Superintendent, Home Department .	Home Department ...	ditto	
445	Dudrence, W A	... Assistant, Office of Inspector-General of Civil Hospitals and Sanitary Commissioner for Bengal.	Writers' Buildings ...	ditto	
446	Duff, A	... Assistant, Macneill & Co ...	2, Clive Ghat Street ...	ditto	
447	Duff, D S	... Assistant, F & C Osler ...	12, Old Court House Street ...	ditto	
448	Duff, P W	... Assistant, W Newman & Co ..	4, Dalhousie Square ...	ditto	
449	Duff, W D	... Assistant, Mackinnon, Mackenzie & Co	16, Strand ...	ditto	
**450	Duggan, A	... 1st Class Clerk, Secretariat, Government of India, Public Works Department.	Imperial Secretariat Buildings	ditto	
[illegible]	[illegible]an, C A R	... Assistant, Shaw, Wallace & Co ...	20, Strand Road ...	ditto	
368	D[illegible]	... Shed Officer, Office of the Calcutta Port Commissioners.	Strand Road ...	ditto	
369	Daniel, J [illegible]	... Assistant, Ralli Brothers ...	1 & 2, Church Lane ...	ditto	
370	Daniel, W P	... Chief Reporter, *Englishman* ...	9, Hare Street ...	ditto	
		.. Assistant, Phelps & Co ...	15, Old Court House Street ...	ditto	

456	Duncan, M	...	Assistant Manager, Stewart, Mac[redacted]n's Place & Co.	...		ditto
457	Duncan, R D	...	Assistant, Graham & Co	...	9, Clive Street	... ditto
458	Duncan, R N	...	Assistant, Andrew Yule & Co	...	7, Clive Row	... ditto
459	Duncan, T C	...	Assistant, F C Pallachi & Co	...	2, Garstin's Place	... ditto
460	Duncan, W N	...	Manager, Stewart, Mackenzie & Co	...	1, Garstin's Place	... ditto
461	Dundas, H	...	Assistant, Standard Oil Company of New York.		8, Dalhousie Square, East	... ditto
462	Dunlop, C D H	...	Assistant, Turner, Morrison & Co	...	6, Lyons Range	... ditto
463	Dunn, J J	...	Head Assistant, Secretary's Department, Office of the Calcutta Port Commissioners.		Strand Road	... ditto
464	Dunstall, C G	...	Partner, Lemon, Blake & Co	...	3-1, Wellesley Place	... ditto
465	Durham, H A	...	Assistant, Begg, Dunlop & Co	...	12, Mission Row	... ditto
466	Durrant, W J	...	Assistant, Office of Private Secretary to the Viceroy.		Government House	... ditto
467	Duru, A E	...	Measurer, Licensed Measurers' Department, Bengal Chamber of Commerce.		2, Clive Street	... ditto
468	Dutton, S T	...	Signal Engineer, E I R	...	E I R House	... ditto
469	Dyer, R W	...	Assistant, Whiteaway, Laidlaw & Co		300, Bow Bazar Street	... ditto
470	Dyer, W	...	Officiating Claims Clerk, Traffic Manager's Office, E I R.		E I R House	... ditto
471	Dyer, W J	...	Assistant, Sun Life Office	...	7, Council House Street	... ditto
	E					
472	Eagleton, A W	...	Deputy Inspector of Excise, Calcutta Collectorate.		3, Charnock Place	... ditto
473	Earle, E	...	Engraver, Engraving Department, Surveyor-General's Office.		13, Wood Street	... ditto
474	Earle, E J	...	Accountant, Office of Pay Examiner, Military Accounts Department, E C.		3, Koila Ghât Street	... ditto
*,*475	Earle, S A	...	Junior 5th Class Clerk, Lower Division, Office of Secretary to the Government of India, Military Department.		6, Esplanade, East	... ditto
*,*476	Eastment, E J	...	Junior 4th Class Clerk, Lower Division, Office of Secretary to the Government of India, Military Department.		Ditto	... ditto

No.	Names.	Style or Calling.	Residence or place of business.	Religion.	Remarks.
	E				
477	Easton, R S	... Assistant, Jessop & Co, Ld	... 93, Clive Street	... Christian	
478	Eatwell, G	... Assistant, Thacker, Spink & Co	... 5, Government Place	... ditto	
479	Eddis, B E G	... Assistant, Gillanders, Arbuthnot & Co	8, Clive Street	... ditto	
480	Edelston, T D	... Assistant, Allen Brothers & Co	... 1, New China Bazar Street	... ditto	
481	Eden, J R	... Assistant, Mackintosh, Burn & Co	... 8, Esplanade, East	... ditto	
482	Edmondson, H C	... Assistant, Turner, Morrison & Co	... 6, Lyons Range	... ditto	
*.*483	Edmondson, J W	... Clerk, Foreign Office	.. Esplanade, West	... ditto	
484	Edmondston, C B	... Sub-Accountant, Chartered Bank of India, Australia, and China.	5, Council House Street	... ditto	
485	Edmondstone, J W	... Manager, Eastern Landing, Clearing and Forwarding Co.	7, Dalhousie Square	... ditto	
*.*486	Edwards, C	... Assistant, Bengal Secretariat, General and Revenue Departments.	Writers' Buildings	... ditto	
487	Edwards, E	... Partner, Francis, Harrison, Hathaway & Co.	13, Government Place	... ditto	
488	Edwards, G T	... Assistant, Cooke & Kelvey	... 20, Old Court House Street	... ditto	
489	Edwards, H J	... Assistant, McLeod & Co	... 31, Dalhousie Square	... ditto	
490	Edwards, L	... Assistant, Graham & Co	... 9, Clive Street	... ditto	
*.*491	Edwards, S	... Assistant, Government of India, Statistical Department.	7, Koila Ghat Street	... ditto	
*.*492	Eede, J E	... Clerk, Home Department	... Home Department	... ditto	
493	Egerton, W M	... Assistant, Gillanders, Arbuthnot & Co	8, Clive Street	... ditto	
494	Eldert, N L	... Assistant, W Leslie & Co	... 2, Chowringhee	... ditto	
495	Elliott, W T T	... Assistant, Macneill & Co	... 2, Clive Ghat Street	... ditto	
496	Ellis, E E	... Rate Clerk, Traffic Manager's Office, E I R.	E I R House	... ditto	
497	Ellis, J H	... Teacher, La Martinière College	... 11, Loudon Street	... ditto	
498	Ellis, W J	... Partner, Don, Watson & Co	... 5, Commercial Buildings	... ditto	
499	Emerson, E C	... Partner, Francis, Harrison, Hathaway & Co.	13, Government Place, East	... ditto	
500	Emin, J	... Assistant, Bird & Co	... 101-1, Clive Street	... ditto	
*.*501	Emmer, F A	... Clerk, Foreign Office	... Esplanade, West	... ditto	

502	Engel, Charles	...	Assistant Superintendent, Office of the Calcutta Port Commissioners.	Strand Road	...	ditto
503	Esaw, G J	...	Officiating Personal Assistant to the Protector of Emigrants and Superintendent of Emigration.	55, Chowringhee Road	...	ditto
504	Eustace, S	...	Chief Engineer, Calcutta Electric Supply Corporation, Ld.	4, Fairlie Place	...	ditto
505	Evans, H F	...	Assistant, Whiteaway, Laidlaw & Co	4, 5 and 6, Chowringhee	...	ditto
506	Evans, W	...	Assistant, W Leslie & Co ...	2, Chowringhee	...	ditto
507	Evennette, C T	...	District Engineer, District No. III, Municipal Office.	10, Sudder Street	...	ditto
508	Evers, T G	...	Assistant, Shaw, Wallace & Co ...	20, Strand Road	...	ditto
509	Ewart, G	...	Assistant, T E Thomson & Co, Ld...	9, Esplanade, East	...	ditto
510	Ewing, A	...	Measurer, Licensed Measurers' Department, Bengal Chamber of Commerce.	2, Clive Street	...	ditto
511	Ewing, A	...	Extra Assistant Superintendent, Drawing Department, Surveyor-General's Office.	13, Wood Street	...	ditto
512	Ewing, E D	...	Accountant, 3rd grade, Office of Accountant-General, Military Department.	6, Esplanade Row, East	...	ditto
	F					
513	Fabian, W P	...	Pipelayer, Municipal Office Water Works Department. ...	15, Munshi Wooly Woala's Lane.		ditto
514	Fairley, J W	...	Clerk, Foreign Office ...	Esplanade, West	...	ditto
515	Fairweather, S A	...	Assistant, Kilburn & Co ...	4, Fairlie Place	...	ditto
516	Fall, H W	...	Assistant, Hall and Anderson ...	31, Chowringhee	...	ditto
517	Farquhar, A	...	Partner, Manton & Co ...	13, Old Court House Street	...	ditto
518	Farrel, J S	...	Head Assistant, Chief Engineer's Office.	4, Corporation Street	...	ditto
519	Fegredo, J A	...	4th grade Clerk, Office of Controller of Military Accounts, E C.	3, Koila Ghat Street	...	ditto

No.	Names.	Style or Calling.	Residence or place of business.	Religion.	Remarks.
	F				
**520	Fegredo, J S	... Clerk, Office of Accountant-General, Public Works Department.	Imperial Secretariat Buildings	Christian	
521	Fell, E L	... Deputy Superintendent, Government of India, Statistical Department.	7, Koila Ghat Street ...	ditto	
**522	Fellinger, J W	... Accountant, Accountant-General's Office, Public Works Department.	Imperial Secretariat Buildings	ditto	
523	Fenn, J P	... Assistant Auditor, E I R ...	E I R House ...	ditto	
524	Ferguson, J W	... Assistant, J C Duffus & Co ...	10, Clive Row ...	ditto	
525	Fermie, A A	... District Health Officer, District No III, Municipal Office.	7, Sudder Street ...	ditto	
526	Fermie, J A	... Junior 1st Class Clerk, Lower Division, Office of Secretary to the Government of India, Military Department.	6, Esplanade, East ...	ditto	
527	Fernandes, E F	... Assistant, A I Mantacheff & Co ...	12, Dalhousie Square ...	ditto	
528	Ferrier, T A	... Assistant Mathematical Instrument Maker, Surveyor-General's Office.	15, Wood Street ...	ditto	
529	Ferris, W	... Member, Dykes & Co ...	29, Waterloo Street ...	ditto	
530	Ferros, J E	.. Clerk, Royal Insurance Co ...	26-27, Dalhousie Square ...	ditto	
**531	Fink, K	... Clerk, Foreign Office ...	Esplanade, West ...	ditto	
532	Fink, W H M	... Assistant, Office of Secretary to the Government of India, Revenue and Agricultural Department, Patents Branch.	Imperial Secretariat Buildings	ditto	
533	Finlayson, D	... Care-taker, Bank of Bengal ...	Strand ...	ditto	
534	FitzWilliam, J J	... Assistant Master, Calcutta Free School	58, Free School Street ...	ditto	
535	Flanagan, C D	... Assistant, A J Bolton & Co ...	32, Jackson's Ghat Street ...	ditto	
536	Fleming, A	... Assistant, Mackinnon, Mackenzie & Co.	16, Strand ...	ditto	
537	Fleming, C	... Assistant, Jessop & Co, Ld ...	93, Clive Street ...	ditto	
**538	Fleming, H J S	... 7th Class Clerk, Secretariat, Government of India, Public Works Department.	Imperial Secretariat Buildings	ditto	

539	Fleming, S J	... Partner, J [redacted] ...	[redacted], Dhurrumtollah Street	...	ditto
540	Fogarty, R	... Head Assistant, Litho Branch, Surveyor-General's Office.	14, Wood Street	...	ditto
541	Force, A	... Assistant, H Clark & Co ...	5, Old Court House Street	...	ditto
542	Ford, J	... Assistant, J Thomas & Co ...	8, Mission Row	...	ditto
543	Ford, W H Rogers	... Assistant, Lovelock & Lewes ...	25, Mangoe Lane	...	ditto
544	Foster, C W	... Head Clerk, Vehicle Movement Branch, Traffic Department, E I R.	E I R House	...	ditto
**545	Fox, C	... Clerk, Foreign Office ...	Esplanade, West	...	ditto
546	Fox, H W	... Assistant, Turner, Morrison & Co ...	6, Lyons Range	...	ditto
547	Fox, J H M	... Assistant, Andrew Yule & Co ...	7, Clive Row	...	ditto
548	Fox, M H	... Assistant Superintendent, Office of the Calcutta Port Commissioners.	Strand Road	...	ditto
549	Fox, S B	... Assistant, Jessop & Co, Ld ...	93, Clive Street	...	ditto
550	Francis, A	... Assistant Litho Printer, Surveyor-General's Office	14, Wood Street	...	ditto
551	Francis, A R	... Assistant, Francis, Harrison, Hathaway & Co	13, Government Place, East	...	ditto
552	Francis, S S	... Superintendent, Pig Slaughter House, District No. III, Municipal Office.	Municipal Office	...	ditto
553	Francis, W	... Assistant, Ranken & Co ...	4, Old Court House Street	...	ditto
554	Fraser, H	... Assistant, Jardine, Skinner & Co ...	4, Clive Row	...	ditto
555	Fraser, J E	... Examiner, Office of Superintendent, Government Printing, India.	8, Hastings Street	...	ditto
**556	Freitas, H St Clair	... Shorthand-Writer, Home Department.	Home Department	...	ditto
557	French, H H	... Superintendent, Office of Secretary to the Government of India, Revenue and Agricultural Department.	Imperial Secretariat Buildings		ditto
558	French, H L	... Superintendent, Office of Secretary to the Government of India, Finance and Commerce Department.	Treasury Buildings	...	ditto
559	Frood, A D	... Assistant, Ashworth, Taylor & Co ...	134, Canning Street	...	ditto
**560	Frost, J H	... Clerk, Home Department ...	Home Department	...	ditto

No.	Names.	Style or Calling.	Residence or place of business.	Religion.	Remarks.
	F				
561	Fullam, E M	... Assistant Examiner, Office of Pay Examiner, Military Accounts Department, E C.	3, Koila Ghat Street ...	Christian	
562	Fuller, R	... Traveller, Lemon, Blake & Co ...	3-1, Wellesley Place ...	ditto	
563	Futcher, S B W	... Assistant, Depositors' Department, Bank of Bengal.	Strand ...	ditto	
564	Fyfe, J H	... Assistant, Mackinnon, Mackenzie & Co	16, Strand ...	ditto	
565	Fyfe, W E D	... Assistant, Mackenzie, Lyall & Co ...	2, Lyons Range ...	ditto	
	G				
566	Gantzer, H	... Superintendent, Tea Warehouse and P T Railway, Office of the Calcutta Port Commissioners.	Strand Road ...	ditto	
*.*567	Gantzer, N H	... Assistant, Office of Secretary to the Government of India, Finance and Commerce Department.	Treasury Buildings ...	ditto	
568	Gardner, C W	... Assistant, Harman & Co ...	12, Government Place ...	ditto	
569	Garratt, S	... Superintendent, Caxton Steam Printing Works.	1-2, Mission Row ...	ditto	
570	Garrett, H	... Assistant Manager, James Simpson & Co, Ld.	32-1, Dalhousie Square ...	ditto	
571	Garrick, H B D	... Artist, Office of Geological Survey of India.	Museum ...	ditto	
572	Garvin, H F	... Inspector, Collector's Department ...	Municipal Office ...	ditto	
573	Gasper, E H S	... Assistant, Bengal Secretariat, Public Works Department.	Writers' Buildings ...	ditto	
574	Gasper, E S	... Assistant, John Dickinson & Co, Ld	7, New China Bazar Street ...	ditto	
575	Gasper, W S	... Engineer, Office of Superintendent, Government Printing, India.	166, Dhurrumtollah Street ...	ditto	
576	Gass, C P	... Assistant, G F Kellner & Co ...	32, Chowringhee ...	ditto	
577	Gastaud, M	... Extra Assistant Superintendent, Surveyor-General's Office. Drawing Department—	13, Wood Street ...	ditto	

578	Gates, F	...	Assistant, Francis, Harrison, Hathaway & Co.	13, Government Place, East	...	ditto
579	Gearing, H G	...	Assistant, George Henderson & Co	100, Clive Street	...	ditto
580	George, C R	...	Assessor of Income-tax ...	3, Charnock Place	...	ditto
581	George, D	...	Deputy License Officer (Carts) ...	Municipal Office	...	ditto
582	George, F	...	Accountant, Audit Department, E I R	E I R House	...	ditto
583	George, J R	...	Assistant, Ralli Brothers ...	1 and 2, Church Lane	...	ditto
584	George, R G	...	Assistant, George Henderson & Co	100, Clive Street	...	ditto
585	Gethen, S C	...	Superintendent of I V Wharves, Office of the Calcutta Port Commissioners.	Strand Road	...	ditto
586	Giannacopulo, C A	...	Assistant, Gladstone, Wyllie & Co ...	101, Clive Street	...	ditto
587	Gilbert, J A	...	Assistant Accountant, Bank of Bengal	Strand	...	ditto
588	Giles, J G	...	Assistant, Mackintosh, Burn & Co ...	8, Esplanade, East	...	ditto
*,*589	Gill, A B	...	Jr 1st class Clerk, Lower Division, Office of Secretary to the Government of India, Military Department.	6, Esplanade, East	...	ditto
590	Gill, J W	...	Assistant, Atkinson Brothers, Ld ...	13, Chowringhee	...	ditto
*,*591	Gill, R E	..	4th class Clerk, Secretariat, Government of India, Public Works Department.	Imperial Secretariat Buildings		ditto
592	Gillespie, G	...	Assistant, Hoare, Miller & Co ...	38, Strand	...	ditto
593	Girling, R	...	Assistant, Whiteaway, Laidlaw & Co	4, 5 & 6, Chowringhee	...	ditto
594	Gleeson, W C	...	Assistant, Finance and Commerce Department.	Treasury Buildings	...	ditto
595	Glen, W C	...	Assistant, Thacker, Spink & Co ...	5, Government Place	...	ditto
596	Glover, T B	...	Assistant, Balmer, Lawrie & Co ...	103, Clive Street	...	ditto
597	Glover, W M	...	Assistant, Burn & Co ...	7, Hastings Street	...	ditto
598	Goddard, G W	...	Partner, James Monteith & Co ...	21, Old Court House Street	...	ditto
599	Godfrey, C T	...	Assistant, J A Dykes & Co ...	102, Clive Street	...	ditto

No	Names.	Style or Calling.	Residence or place of business.	Religion.	Remarks.
	G				
600	Godfrey, G C	... Assistant, W Newman & Co ...	4, Dalhousie Square ...	Christian	
601	Godwin, R H	... Assistant, George Henderson & Co	100, Clive Street ...	ditto	
602	Gold, G E	... Assistant, Manton & Co ...	13, Old Court House Street ...	ditto	
603	Gomes, N	... 3rd class Assistant, Office of Controller of Military Accounts, E C, Supply and Transport Branch	3, Koila Ghât Street ...	ditto	
604	Gomes, T	... Assistant, Graham & Co ...	9, Clive Street ...	ditto	
605	Gomes, T H	... Assistant, Kilburn & Co ...	4, Fairlie Place ...	ditto	
606	Gomes, W E	... Assistant, Shrager Brothers ...	28, Dalhousie Square ...	ditto	
607	Gomes, W R	... Assistant, Government Medical Store Department, Bengal Command.	8, Wellesley Place ...	ditto	
608	Gomes, G F H	... Assistant, South British Fire and Marine Insurance Co.	1, Lall Bazar ...	ditto	
609	Gonsalves, C	... Assistant, Nash and Andrew ...	14, Government Place ...	ditto	
610	Gonsalves, H	... Receipt Inspector, Office of the Calcutta Port Commissioners.	Strand Road ...	ditto	
611	Gonsalves, N J	.. Assistant Litho Printer, Surveyor-General's Office.	14, Wood Street ...	ditto	
*612	Goodall, F E	... 6th class Clerk, Secretariat, Government of India, P W D	Imperial Secretariat Buildings	ditto	
613	Goodall, P	... Assistant, J Monteith & Co ...	21, Old Court House Street ...	ditto	
614	Goodman, J	... Assistant, Anderson, Wright & Co ...	22, Strand ...	ditto	
615	Goodwin, A E	... Accountant, Martin & Co ...	Jackson House ...	ditto	
616	Goodwin, R N	... Manager, *Englishman* office ...	9, Hare Street ...	ditto	
617	Gordon, A D	... Assistant, Williamson, Magor & Co ...	4, Mangoe Lane ...	ditto	
618	Gordon, C E	... Assistant, Shaw, Wallace & Co ...	20, Strand Road ...	ditto	
619	Gordon, J H	... Assistant, Bathgate & Co ...	19, Old Court House Street ...	ditto	
620	Goss, C H A	... Assistant, Gillanders, Arbuthnot & Co	8, Clive Street ...	ditto	
621	Gould, Franks	... Assistant, Graham & Co ...	9, Clive Street ...	ditto	

622	Govan, P D	...	Assistant, Cook & Co	...	182, Dhurrumtollah Street	... ditto
623	Govan, W	...	Assistant, Kilburn & Co	...	4, Fairlie Place	... ditto
624	Graham, C A	...	Assistant, Grindlay & Co	...	11, Hastings Street	... ditto
625	Graham, R	...	Assistant, Finlay, Muir & Co	..	1, Clive Street	... ditto
626	Grahame, W H H	...	Assistant Accountant, National Bank of India, Ld.		104, Clive Street	... ditto
*.*627	Grant, J	...	Clerk, Foreign Office	...	Esplanade, West	... ditto
628	Grant, J R	...	Supervisor of Jetties, Office of the Calcutta Port Commissioners.		Strand Road	... ditto
629	Gray, A	...	Assistant, Mackintosh, Burn & Co	...	8, Esplanade, East	... ditto
630	Gray, C O	...	Head Assistant, Surveyor-General's Office, Correspondence Branch.		13, Wood Street	... ditto
631	Gray, J C C	...	Accountant, Office of Controller of Military Accounts, E C, Accounts Branch.		Military Account Department, 3, Koila Ghât Street.	ditto
632	Grayburn, L M	...	Assistant Accountant, National Bank of India, Ld.		104, Clive Street	... ditto
633	Green, C L	...	Draftsman, Surveyor-General's Office, Drawing Department.		13, Wood Street	... ditto
634	Green, C V	...	Assistant Accountant, Alliance Bank of Simla, Ld.		8, Council House Street	... ditto
635	Green, H H	...	Engraver, Engraving Department, Surveyor-General's Office.		13, Wood Street	... ditto
*.*636	Green, J H	...	Clerk, Foreign Office	...	Esplanade, West	... ditto
637	Greene, F W	...	Assistant, Graham & Co	...	9, Clive Street	... ditto
638	Greenhill, F F	...	Assistant, Cook & Co	...	182 & 183, Dhurrumtollah Street.	ditto
*.*639	Greenway, F C	...	Assistant, Bengal Secretariat, Judicial, Political and Appointment Departments.		Writers' Buildings	... ditto
640	Gregory, J F	...	Assistant, Ernsthauson, Ld	...	9, Clive Row	... ditto
*.*641	Gregory, T	...	3rd class Clerk, Secretariat, Government of India, Public Works Department.		Imperial Secretariat Buildings	ditto
642	Gregson, S	...	Assistant, Bengal Chamber of Commerce.		2, Clive Street	... ditto

No.	Names.	Style or Calling.	Residence or place of business.	Religion.	Remarks.
	G				
643	Greig, J F	... Assistant, W Leslie & Co	... 2, Chowringhee	...	Christian
644	Greig, W H	... Assistant, Finlay, Muir & Co	... 1, Clive Street	...	ditto
645	Grenon, E	... Assistant, Moran & Co	... 3, Mangoe Lane	...	ditto
646	Gresham, C	... Assistant, W Leslie & Co	... 2, Chowringhee	...	ditto
647	Greve, C	... Assistant, Mackintosh, Burn & Co	... 8, Esplanade, East	...	ditto
648	Griffith, R R	... Assistant, Lovelock & Lewes	... 25, Mangoe Lane	...	ditto
649	Grimaldi, N	... Assistant, Petrocochino Brothers	... 4, Clive Ghât Street	...	ditto
650	Grimson, G R	... Clerk, Office of Pay Examiner, Mili- Accounts Department, E C.	3, Koila Ghât Street	...	ditto
651	Grose, C H	... Assistant, Office of Secretary to the Government of Bengal, Public Works Department.	Writers' Buildings	...	ditto
652	Grossmann, J	... Assistant, J Thomas & Co	... 8, Mission Row	...	ditto
653	Groves, H R M	... Assistant, New York Life Insurance Co	8, Old Court House Street	...	ditto
654	Gubbay, A J	... Assistant, H D Cartwright & Co	... 13, Clive Street	...	Jew
655	Gubboy, J A	... Assistant, Graham & Co	... 9, Clive Street	...	ditto
656	Guest, C W W	... Accountant, Office of Government Examiner of Railway Accounts, Public Works Department.	E I R House	...	Christian
657	Guinness, A R	... Boiler Inspector, Office of the Commissioners for the Inspection of Steam-boilers.	309, Bow Bazar Street	...	ditto
658	Gurney, R M	... Assistant, Martin & Co	... Jackson House	...	ditto
659	Guzman, E	... Examiner, Government Printing Office, India.	8, Hastings Street	...	ditto

H

660	Hailes, A H	...	Assistant, Francis, Harrison, Hathaway & Co.	13, Government Place, East	ditto
661	Hale, E Seymour	...	Secretary, Calcutta School Book Society.	1, Wellington Square ...	ditto
662	Hales, H W	...	Assistant, Meugens, King and Simson.	102, Clive Street ...	ditto
663	Halfhide, R H	...	Assistant, Bengal Secretariat, Public Works Department.	Writers' Buildings ...	ditto
664	Hall, A L	...	Assistant, Turner, Morrison & Co ...	6, Lyons Range ...	ditto
665	Hall, F J	...	Deputy Superintendent, Office of Superintendent, Government Printing, India.	8, Hastings Street ...	ditto
666	Hall, L	...	Assistant, Bathgate & Co ...	19, Old Court House Street ...	ditto
667	Hall, P	...	Assistant, Marshall Sons & Co, Ld ...	99, Clive Street ...	ditto
668	Hall, P N	...	Partner, Hall & Anderson ...	31, Chowringhee ...	ditto
669	Hall, T W	...	Partner, Kinmond & Co ...	5, Garstin's Place ...	ditto
670	Halloran, W M	...	Sub-Engineer, Office of the Executive Engineer, 2nd Calcutta Division.	Writers' Buildings ...	ditto
671	Halpern, E J	...	Assistant, Stein Forbes & Co, Ld ...	12, Dalhousie Square ...	ditto
672	Hamilton, D McK (Jr)	...	Assistant, Mackinnon, Mackenzie & Co	16, Strand ...	ditto
673	Hamilton, G	...	Accountant, Office of Examiner of Ordnance Factory Accounts in India.	1, Koila Ghât Street ...	ditto
674	Hamilton, N	...	Assistant, Lovelock and Lewes ...	25, Mangoe Lane ...	ditto
675	Hampson, J	...	Assistant, Graham & Co ...	9, Clive Street ...	ditto
676	Hanby, H H B	...	Extra Assistant Superintendent, Surveyor-General's Office, Drawing Department.	13, Wood Street ...	ditto
677	Hannah, Captain A S	...	Manager, W H Harton & Co ...	30, Strand Road ...	ditto
678	Hannah, G S	...	Partner, W Haworth & Co ...	1, Mission Row ...	ditto
679	Hannay, W G	...	Assistant Shipping Master, Shipping Office.	15-1, Strand Road ...	ditto
680	Hanning, J C	...	Assistant Accountant, National Bank of India, Ld.	104, Clive Street ...	ditto

No.	Names.	Style or Calling.	Residence or place of business.	Religion.	Remarks.
	H				
681	Hardless, T	... Assistant, Begg, Dunlop & Co ...	12, Mission Row ...	Christian	
682	Hardy, J R	... Assistant, Marshall Sons & Co,|Ld....	99, Clive Street ...	ditto	
683	Hardy, S	... Assistant, Government Medical Store Department, B C.	8, Wellesley Place ...	ditto	
684	Harland, G	... Manager, Cosmopolitan Hotel ...	39, Bentinck Street ...	ditto	
685	Harley, R E D L	... Partner, F Harley & Co ...	10, Lall Bazar Street ...	ditto	
686	Harnack, G H	... Assistant, Harnack & Co ...	10 & 10-1, Old Court House Street.	ditto	
687	Harper, G	... Assistant, Francis, Harrison, Hathaway & Co.	13, Government Place, East ...	ditto	
688	Harrington, F	... Assistant, Walter, Locke & Co, Ld ..	4, Esplanade ...	ditto	
689	Harrington, T	... Inspector, Licensed Measurers' Department, Bengal Chamber of Commerce.	2, Clive Street ...	ditto	
690	Harrison, F H	... Assistant, Manton & Co ...	13, Old Court House Street ...	ditto	
691	Hart, G L	... Deputy Accountant, Calcutta Mint ...	Strand Road, North ...	ditto	
692	Hart, T C	... Assistant, Burk Brothers ...	2 & 4, Peter's Lane ...	ditto	
693	Harvey, C	... Assistant, Army and Navy Co-operative Society, Ld.	41, Chowringhee ...	ditto	
*,*694	Harvey, C H L	... 7th class Clerk, Secretariat, Government of India, P. W. D.	Imperial Secretariat Buildings	ditto	
695	Harvey, G	... Assistant, Bombay Company, Ld ...	7-1, Lyons Range ...	ditto	
696	Harvey, H L	... Assistant, Ralli Brothers ...	1 & 2, Church Lane ...	ditto	
697	Harvey, J	... Assistant, Becker, Gray & Co ...	7, Hastings Street ...	ditto	
698	Harvey, J	... Assistant, Hoare, Miller & Co ...	38, Strand Road ...	ditto	
699	Harvey, V	... Assistant, Shrager Brothers ...	28, Dalhousie Square ...	ditto	
700	Hawes, H	... Assistant, Graham & Co ...	9, Clive Street ...	ditto	
701	Hawkins, F G	... Assistant, Peppe Delius & Co ...	15, Clive Row ...	ditto	
*,*702	Hay, H H	... 5th class Clerk, Secretariat, Government of India, Public Works Department.	Imperial Secretariat Buildings	ditto	

703	Hayes, W	...	Assistant, Phelps & Co	...	15, Old Court House Street ...	ditto
704	Haythorne, E C C	...	Assistant, J Thomas & Co	...	8, Mission Row ...	ditto
705	Haywood, H M	...	Assistant Secretary, Bengal Chamber of Commerce.		2, Clive Street ...	ditto
706	Hefferan, J	...	Assistant Examiner, 1st grade, Office of Ordnance and Army Clothing Branches.		Military Accounts Department Buildings, Koila Ghât Street.	ditto
707	Hefferan, J J	...	Assistant, Jessop & Co, Ld	...	93, Clive Street ...	ditto
708	Heilgers, K A	...	Assistant, F. W. Heilgers & Co		136, Canning Street ...	ditto
709	Heimann, H G	...	Assistant, Great Eastern Hotel Co, Ld.		1, 2 and 3, Old Court House Street.	ditto
**710	Hein, A G	...	Accountant, Accountant-General's Office, Public Works Department.		Imperial Secretariat Buildings	ditto
711	Heins, F N E	...	Draftsman, Bengal Secretariat, Public Works Department.		Writers' Buildings ...	ditto
712	Heins, G H C	...	Assistant, H Heins & Co	...	76, Dhurrumtollah Street ...	ditto
713	Heins, H A O	...	Assistant, H Heins & Co	...	76, Dhurrumtollah Street ...	ditto
714	Henderson, A	...	Assistant, Bird & Co	...	101-1, Clive Street ...	ditto
715	Henderson, W S	...	Assistant, Lemon, Blake & Co	...	3-1, Wellesley Place ...	ditto
716	Hendry, H R	...	Assistant, Ernsthausen, Ld	...	9, Clive Row ...	ditto
717	Henry, E J	...	Reader, Bengal Secretariat Press	...	Writers' Buildings ...	ditto
718	Herbert, L W A	...	Herbert, Parrott & Co	...	4-1, Government Place, North	ditto
719	Hewett, A S	...	Sub-Accountant, Chartered Bank of India, Australia and China.		5, Council House Street ...	ditto
720	Heynemann, K E	...	Merchant	...	4, Lyons Range ...	ditto
**721	Heysham, H S	...	Superintendent, Office of Secretary to the Government of India, Revenue and Agricultural Department, Forest Branch.		Imperial Secretariat Buildings	ditto

No.	Names.	Style or Calling.	Residence or place of business.	Religion.	Remarks.
	H				
*.*722	Heysham, T B	... 5th class Clerk, Secretariat, Government of India, Public Works Department.	Imperial Secretariat Buildings	Christian.	
723	Hickie, W A	... Assistant, Mackinnon, Mackenzie & Co	16, Strand ...	ditto	
724	Higgins, A W	... Assistant, Macfie and Macdonald ...	13-1, Old Court House Street	ditto	
725	Higgins, F R	... Assistant, Harold & Co ...	3, Dalhousie Square ...	ditto	
*.*726	Higgs, B	... Clerk, Foreign Office ...	Esplanade, West ...	ditto	
727	Highton, A D S	... Assistant, Depositors' Department, Bank of Bengal.	Strand ...	ditto	
728	Hilary, H J	... Junior Secretary to Agent, E I R	E I R House ...	ditto	
729	Hill, E P S	... Extra Assistant Superintendent, Surveyor-General's Office, Drawing Department.	13, Wood Street ...	ditto	
*.*730	Hill, H A M	... 3rd grade Accountant, Office of the Accountant-General, Military Department.	6, Esplanade Row, East ...	ditto	
731	Hill, W F	... Partner, Cooke & Kelvey ...	20, Old Court House Street ...	ditto	
732	Hill, W H	... Assistant, Cook & Co ...	182 and 183, Dhurrumtollah Street.	ditto	
733	Hilliard, G H	... Assistant, Carritt, Moran & Co ...	9, Mission Row ...	ditto	
734	Hillier, W E	... Acting Chief Assistant, Controller of Stores' Office, E I R.	E I R House ...	ditto	
735	Hippolite, C E	... Assistant, Graham & Co ...	9, Clive Street ...	ditto	
736	Hoakley, T W	... Assistant, Mackinnon, Mackenzie & Co	16, Strand ...	ditto	
737	Hodder, C	... Assistant, G E Bailey ...	8-2, Hastings Street ...	ditto	
*.*738	Hodgen, G	... Clerk, Foreign Office ...	Esplanade, West ...	ditto	
739	Hodges, A W	... Assistant, R B Rodda & Co ...	2, Wellesley Place ...	ditto	
740	Hodges, J S	... Measurer, Bengal Chamber of Commerce.	2, Clive Street ...	ditto	
741	Hodges, J W	... Assistant, T E Thomson & Co, Ld	9, Esplanade, East ...	ditto	
742	Hodgeton, David	... Partner, Don, Watson & Co ...	5, Commercial Buildings ...	ditto	
743	Hodgkinson, W	... Assistant, Balmer, Lawrie and Co ...	103, Clive Street ...	ditto	

744	Hoffstadt, W N	...	1st Clerk, Department of Land Records and Agriculture, Bengal.	Writers' Buildings	...	ditto
745	Hogan, P	...	Accountant, Office of Controller of Military Accounts, E C, Accounts Branch.	Military Accounts Department, 3, Koila Ghat Street.		ditto
746	Holland, L	...	Assistant, Balmer, Lawrie & Co ...	103, Clive Street	...	ditto
747	Hollis, T R	...	Chief Clerk, Chief Engineer's Office, E I R.	E I R House	...	ditto
748	Holly, W H	...	Assistant, W Leslie & Co ...	2, Chowringhee	...	ditto
749	Holwell, C A	...	Assistant, Thacker, Spink & Co ...	5, Government Place	...	ditto
750	Hooper, C F	...	Assistant, Thacker, Spink & Co ...	5, Government Place	...	ditto
*751	Hooper, J M	...	Accountant, Accountant-General's Office, Public Works Department.	Imperial Secretariat Buildings		ditto
752	Hope, A	...	Assistant, Mackintosh, Burn & Co ...	8, Esplanade, East	...	ditto
753	Hope, W H	...	Assistant, Jessop & Co, Ld ...	93, Clive Street	...	ditto
754	Hoppen, S	...	Assistant, Mason, Hill & Rogers ...	19, Chowringhee	...	ditto
755	Horncastle, E	...	Assistant, Mackenzie, Lyall & Co ...	2, Lyons Range	...	ditto
*756	Horsley, F S	...	Clerk, Foreign Office ...	Esplanade, West	...	ditto
757	Horton, G T	...	Member, Dykes & Co ...	29, Waterloo Street	...	ditto
758	Hottinger, H W	...	Accountant, Office of Government Examiner of Railway Accounts, Public Works Department.	E I R House	...	ditto
759	Houston, W. McA	...	Assistant, Mackinnon, Mackenzie & Co	16, Strand	...	ditto
*760	Howe, C St J	...	Clerk, Foreign Office ...	Esplanade, West	...	ditto
761	Howe, T M	...	Assistant, Bengal Secretariat, Judicial, Political and Appointment Departments.	Writers' Buildings	...	ditto
762	Howse, F W	...	Partner, F W Howse & Co ...	3, Lall Bazar	...	ditto
763	Hughes, D P	...	Clerk, Audit Office, E I R ...	E I R House	...	ditto

No.	Names.	Style or Calling	Residence or place of business	Religion.	Remarks.
	H				
*764	Hughes, E B	... Clerk, Foreign Office	... Esplanade, West	...	Christian
765	Hughes, W F	... Superintendent, Comptroller-General's Office.	The Treasury	...	ditto
766	Humble, C	... Assistant, Nash and Andrew	... 14, Government Place	...	ditto
767	Humphries, W G	... Herbert, Parrott & Co	... 4-1, Government Place, East		ditto
768	Hunt, E	... Assistant, Heatly & Gresham, Ld	... 6, Waterloo Street	...	ditto
769	Hunt, J F	... Produce Broker	... 66, Dhurrumtollah Street	...	ditto
770	Hunter, A H	... Assistant, Mackintosh, Burn & Co	... 8, Esplanade, East	...	ditto
771	Hunter, C M	... Assistant, Andrew Yule & Co	... 7, Clive Row	...	ditto
772	Hurll, P	... Assistant, Finlay, Muir & Co	... 1, Clive Street	...	ditto
773	Hutchinson, R W	... Assistant, Birkmyre Brothers	... 6, Clive Row	...	ditto
774	Hutton, G A K	... Assistant, Walker, Goward & Co	... 32, Jackson's Ghât Street	...	ditto
775	Hyde, E	... Assistant, F & C Osler	... 12, Old Court House Street	...	ditto
776	Hyland, C P	... Assistant, Bindloss & Co	... 2, Commercial Buildings	...	ditto
777	Hynd, G	... Assistant, Perman & Hynd	... 23, Strand Road	...	ditto
778	Hynes, C	... Sub-Engineer, Office of Executive Engineer, Circular and Eastern Canals Division.	Writers' Buildings	...	ditto
*779	Hypher, J A	... 4th class Senior Clerk, Upper Division, Office of Secretary to the Government of India, Military Department.	6, Esplanade, East	...	ditto
*780	Hypher, P P	... Junior 3rd class Clerk, Lower Division, Office of Secretary to the Government of India, Military Department.	6, Esplanade, East	...	ditto

I

781	Imrie, C	...	Assistant, H Clark & Co	...	5, Old Court House Street ...	ditto
782	Incell, W	...	Gas-fitter	...	11, Weston's Lane ...	ditto
783	Inglis, C D	...	Assistant, O Steel & Co .	...	14, Old Court House Street ...	ditto
784	Inglis, F	...	Gate Officer, Office of the Calcutta Port Commissioners.		Strand Road ...	ditto
*.*785	Inglis, J W	...	Clerk, Foreign Office	...	Esplanade, West ...	ditto
786	Ingman, G	...	Engineer, Oriental Telephone and Electric Co, Ld.		7, Pollock Street ...	ditto
787	Ingram, B	...	Assistant, Office of Secretary to the Government of India, Finance and Commerce Department.		Treasury Buildings ...	ditto

J

788	Jackson, G	...	Assistant, Whiteaway, Laidlaw & Co.		4, 5 & 6, Chowringhee ...	ditto
789	Jackson, H G	...	Accident Registrar, Chief Superintendent's Office, Traffic Department, E I R.		E I R House ...	ditto
790	Jackson, J E	...	Assistant Auditor, E I R	...	E I R House ...	ditto
791	Jackson, T	...	Assistant Auditor, E I R .	...	E I R House ...	ditto
792	Jacob, Chas	...	Assistant, Mackinnon, Mackenzie & Co		16, Strand ...	ditto
793	James, A W N	...	Engraver, Engraving Department, Surveyor-General's Office.		13, Wood Street ...	ditto
794	James, H A	...	Assistant, Bengal Secretariat, Public Works Department.		Writers' Buildings ...	ditto
*.*795	James, J D R	...	7th class Clerk, Secretariat, Government of India, Public Works Department.		Imperial Secretariat Buildings	ditto
*.*796	James, L E (Jr)	...	Accountant, Office of Accountant-General, Public Works Department.		Imperial Secretariat Buildings	ditto
*.*797	James, L E (Sr)	...	Clerk, Office of Accountant-General, Public Works Department.		Imperial Secretariat Buildings	ditto
798	James, P	...	Assistant, Dykes & Co	..	29, Waterloo Street ...	ditto
799	James, R Langford	...	Assistant, Finlay, Muir & Co	...	1, Clive Street ...	ditto

No.	Names.	Style or Calling.	Residence or place of business.	Religion.	Remarks.
	J				
800	Jameson, S ...	Assistant, Shaw, Wallace & Co ...	20, Strand Road ...	Christian	
801	Janes, J ...	Assistant, Heatly & Gresham, Ld ...	6, Waterloo Street ...	ditto	
802	Jardine, A ...	Assistant, Macneill & Co ...	2, Clive Ghât Street ...	ditto	
803	Jarey, W ...	Assistant, G. E. Hotel Co, Ld ...	1, 2 and 3, Old Court House Street.	ditto	
804	Jenkins, R A Arnod ...	Chief Assistant, P & O S N Co ...	19, Strand Road ...	ditto	
805	Jennaway, J H ...	Assistant, Martin & Co ...	Jackson House ...	ditto	
806	Jennings, H B ...	Printer, Traill & Co. ...	20, British Indian Street ...	ditto	
807	Jensen, Captain ...	Assistant, Kilburn & Co ...	4, Fairlie Place ...	ditto	
808	Jewell, H A ...	Proprietor, Cones & Co ...	19, Lall Bazar Street ...	ditto	
809	Jewell, W R C ...	Deputy Traffic Manager, Office of the Calcutta Port Commissioners.	Strand Road ...	ditto	
810	Jewett, E W ...	Accountant, Calcutta Mint ...	47, Strand Road, North ...	ditto	
811	Joyce, L D ...	Assistant, Litho Branch, Surveyor-General's Office.	14, Wood Street ...	ditto	
812	Joachim, S E ...	2nd grade Accountant, Office of Examiner, P W Accounts, Bengal.	8, Lyons Range ...	ditto	
813	Joakim, E ...	Accountant, Walter, Locke & Co, Ld	4, Esplanade ...	ditto	
814	Joakim, H J C ...	Assistant, Office of Secretary to the Government of India, Finance and Commerce Department.	Treasury Buildings ...	ditto	
815	Johnson, A ...	Measurer, Licensed Measurers' Department, Bengal Chamber of Commerce.	2, Clive Street ...	ditto	
816	Johnson, E ...	Clerk, Agent's Office, E I R ...	E I R House ...	ditto	
**817	Johnson, E A ...	6th class Clerk, Secretariat, Government of India, Public Works Department.	Imperial Secretariat Buildings	ditto	
818	Johnson, G E ...	Assistant, Bengal Secretariat, P W D	Writers' Buildings ...	ditto	

819	Johnston, J E	...	Boiler Inspector, Office of the Commissioners for the Inspection of Steam-boilers.	309, Bow Bazar Street	...	ditto
820	Johnstone, W	...	Deputy Superintendent, Bengal Secretariat Press.	Writers' Buildings	...	ditto
821	Johnstone, W H	...	District Engineer, District No. I, Municipal Office.	79, Cornwallis Street	...	ditto
822	Jones, E P	...	Superintendent, Accountant-General's Office, Bengal.	The Treasury	...	ditto
823	Jones, J C	...	Assistant, Bengal Secretariat, Public Works Department.	Writers' Buildings	...	ditto
824	Jones, R	...	Assistant, J Monteith & Co	21, Old Court House Street	...	ditto
825	Jones, S T	...	Accountant, Office of Pay Examiner, Military Accounts Department, E C	3, Koila Ghât Street	.	ditto
826	Jones, W F	...	Assistant, Whiteaway, Laidlaw & Co	4-6, Chowringhee	...	ditto
827	Jones, W J	...	Assistant Time Table Clerk, Chief Superintendent's Office, Traffic Department, E I R.	E I R House	...	ditto
828	Jones, W M	...	Market Superintendent ...	Municipal Market	...	ditto
829	Jordan, C F	...	Assistant, Ahmuty & Co ...	6, Church Lane	...	ditto
830	Jordan, S D	...	Electrical Supervisor, Office of Electrical Engineer to the Government of Bengal.	58, Chowringhee	...	Armenian
831	Joseph, Samuel	...	Superintendent, Gowkhana, District No. III, Municipal Office.	10, Sudder Street	...	Christian
832	Joshua, A	...	Assistant, Shrager Brothers ...	28, Dalhousie Square	...	Armenian
833	Josland, R E	...	Partner, Steuart & Co ...	8, Old Court House Corner	...	Christian
834	Jowitt, J E.	...	Assistant, Robinson, Morrison & Co	5, Commercial Buildings	...	ditto
835	Joynt, E W	..	Clerk, Office of Government Examiner of Railway Accounts, P W D.	E I R House	...	ditto
836	Judah, J S	...	Assistant, David Sassoon & Co, Ld	3, Fairlie Place	....	Jew
837	Judge, L C G	...	Assistant Editor, *Indian Gardening and Planting.*	5-1, Council House Street	...	Christian
838	Justice, A	...	Assistant, Bird & Co ...	101-1, Clive Street	...	ditto

No.	Names.	Style or Calling.	Residence or place of business.	Religion.	Remarks.
	K				
839	Kay, G H	... Assistant, F & C Osler	... 12, Old Court House Street ...	Christian	
840	Kee, R	... Assistant, Birkmyre Brothers	... 6, Clive Row ...	ditto	
841	Kelly, P F	... Sub-Assistant Auditor, E I R	... E I R House ...	ditto	
*.*842	Kelly, W	... Accountant, Accountant-General's Office, P W D.	Imperial Secretariat Buildings	ditto	
843	Kelly, W. G.	... Teacher, La Martinière College	... 11, Loudon Street ...	ditto	
844	Kelso, J S	... Assistant, Jardine, Skinner & Co	... 4, Clive Row ...	ditto	
845	Kemp, J	... Assistant, Macneill & Co	... 2, Clive Ghât Street ...	ditto	
*.*846	Kennedy, W A	... Clerk, Foreign Office	... Esplanade, West ...	ditto	
847	Kerr, C J	... Assistant, Mackinnon, Mackenzie & Co.	16, Strand ...	ditto	
848	Kerr, F S	... Assistant, Bombay Company, Ld	... 7-1, Lyons Range ...	ditto	
849	Kershaw, L E	... Assistant, Office of Secretary to the Government of India, Finance and Commerce Department.	Treasury Buildings ...	ditto	
850	Kidd, J O	... Assistant, Macneill & Co	... 2, Clive Ghât Street ...	ditto	
851	Kiernander, O L	... Assistant, Bird & Co	... 101-1, Clive Street ...	ditto	
852	Kiernander, W J	... Assistant, Kilburn & Co	... 4, Fairlie Place ...	ditto	
853	Killick, O	... Assistant Secretary, Office of the Calcutta Port Commissioners.	Strand ...	ditto	
854	King, Jeremia Gerald	... Assistant, James Luke & Sons	... 6, Pollock Street ...	ditto	
855	King, J R	... 2nd grade Assistant Examiner, Office of Controller of Military Accounts, E C.	3, Koila Ghât Street ...	ditto	
856	King, Millar M	... Assistant Manager, J King & Co, Ld	40, Strand Road ...	ditto	
857	Kingcome, C	... Assistant, Ralli Brothers	... 1 & 2, Church Lane ...	ditto	
858	Kingsley, G	... Partner, Shaw, Wallace & Co	... 20, Strand Road ...	ditto	
*.*859	Kirk, J E G	... Junior 5th class Clerk, Lower Division, Office of Secretary to the Government of India, Military Department.	6, Esplanade, East ...	ditto	
*.*860	Kirkpatrick, C W	... Clerk, Foreign Office	... Esplanade, West ...	ditto	
861	Kirkpatrick, S R	... Teacher, La Martinière College	... 11, Loudon Street ...	ditto	

862	Klopp, C	...	Partner, Blacker & Co	...	2, Clive Street	... ditto
863	Knolles, F S	...	Assistant, I R G P T W & Co, Ld	...	1-1, Fairlie Place	... ditto
864	Knox, J	...	Deputy Superintendent, Licensed Measurers' Department, Bengal Chamber of Commerce.		2, Clive Street	... ditto
865	Knox-Ord, J	...	Assistant, Ralli Brothers	...	1 & 2, Church Lane	... ditto
866	Knox-Ord, W	...	Assistant, Ralli Brothers	...	1 & 2, Church Lane	... ditto
867	Kraal, G A	...	Assistant, Moran & Co	...	3, Mangoe Lane	... ditto
**868	Kunning, A B	...	Junior 3rd class Clerk, Lower Division, Office of Secretary to the Government of India, Military Department.		6, Esplanade, East	... ditto
	L					
869	Laing, J M	...	Passing Officer, Bank of Bengal	...	Strand	... ditto
870	Laird, A P	...	Assistant, Bird & Co	...	101-1, Clive Street	... ditto
871	Laird, W K	...	Assistant, Mackinnon, Mackenzie & Co		16, Strand	... ditto
872	Lamb, F H B	...	Assistant, Barry & Co	...	5, Lyons Range	... ditto
873	Lambert, W O	...	Assistant, Ranken & Co	...	4, Old Court House Street	... ditto
874	Landale, H R	...	Assistant, George Henderson & Co	...	100, Clive Street	... ditto
875	Lane, E M	...	Assistant, King, Hamilton & Co	...	7, Hare Street	... ditto
876	Lane, F J	...	Assistant, T E Thomson & Co, Ld	...	9, Esplanade, East	... ditto
877	Lane, V B	...	Assistant, Ralli Brothers	...	1 & 2, Church Lane	... ditto
878	Lang, W C	...	Accountant, Standard Oil Co of New York.		8, Dalhousie Square, East	... ditto
879	Langford, H	..	Passing Officer, Bank of Bengal	...	Strand	... ditto
880	Langham, S C	...	Assistant, Gillanders, Arbuthnot & Co		8, Clive Street	... ditto
881	Lapsley, E J	...	Assistant, Depositors' Department, Bank of Bengal.		Strand	... ditto
882	Lardner, D S	...	Partner, Lardner & Co	...	4, Commercial Buildings	... ditto
883	Last, C P	...	Assistant, Army and Navy Co-operative Society, Ld.		41, Chowringhee	... ditto
884	LaTouche, P	...	Assistant, Grossmann & Co	...	2, Fairlie Place	... ditto
885	Latten, R G	...	Assistant, Whiteaway, Laidlaw & Co		4, 5 and 6, Chowringhee	... ditto

No.	Names.	Style or Calling.	Residence or place or business.	Religion.	Remarks.
886	Laurie, V ..	Assistant, T E Thomson & Co, Ld ...	9, Esplanade, East ...	Christian	
887	LaValette, J A ...	Shorthand Writer, G T M's Office, E I R.	E I R House ...	ditto	
888	Lavalette, W O ...	Assistant, F & C Osler ...	12, Old Court House Street ...	ditto	
889	Laville, B L A ...	Assistant, Finance and Commerce Department.	Treasury Buildings ...	ditto	
*.*890	Law, C H ...	Assistant, Office of Secretary to the Government of India, Legislative Department.	Legislative Department Office, 5, Esplanade, West.	ditto	
891	Law, R O ...	Assistant, Birkmyre Brothers ...	6, Clive Row ...	ditto	
892	Lawrence, H S ...	Assistant, Catholic Orphan Press ...	4, Portuguese Church Street ...	ditto	
893	Lawrence, W F ...	Assistant, C Lazarus & Co ...	60, Bentinck Street ...	ditto	
894	Laws, W W ...	Assistant, Thos. Cook & Son ...	9, Old Court House Street ...	ditto	
895	Lawson, A ..	Assistant, Mackenzie, Lyall & Co ...	2, Lyons Range ...	ditto	
896	Lawton, S ...	Assistant, F & C Osler ...	12, Old Court House Street ...	ditto	
897	Lean, R ...	Assistant, Shaw, Wallace & Co ...	20, Strand Road ...	ditto	
898	Leatham, H H ...	Accountant, 2nd grade, Office of Examiner of Ordnance and Army Clothing Branches.	Military Accounts Department Buildings, Koila Ghât Street.	ditto	
899	LeCocq, J M ...	Assistant, James Nourse, Ld ...	5, Commercial Buildings ...	ditto	
900	Lee, W A ...	Assistant, Hoare, Miller & Co ...	38, Strand Road ...	ditto	
901	Leeson, R G ...	Manager, R B Rodda & Co ...	2, Wellesley Place ...	ditto	
902	LeFaucheur, Robert ...	Typist, North British and Mercantile Insurance Office.	100, Clive Street ...	ditto	
903	LeFranc, E A ...	Assistant Litho. Printer, Surveyor-General's Office.	14, Wood Street ...	ditto	
904	LeFranc, S H ...	General Assistant, Office of Superintendent, Government Printing, India.	166, Dhurrumtollah Street ...	ditto	
905	LeFranc, W E ...	Assistant, Thacker, Spink & Co ...	5, Government Place ...	ditto	
*.*906	Leicester, W ...	6th class Clerk, Secretariat, Government of India, P W D.	Imperial Secretariat Buildings	ditto	
907	Leigh-Hunt, P C C ...	Assistant, Lovelock and Lewes ...	25, Mangoe Lane ...	ditto	
908	Lemon, W S ...	Partner, Lemon, Blake & Co ...	3-1, Wellesley Place ...	ditto	
909	LeRoy, P ...	Assistant, Mackinnon, Mackenzie & Co	16, Strand ...	ditto	
910	Leslie, George ...	Representative, John Dewar and Sons, Ld.	10, Hare Street ...	ditto	
911	Leslie, James A ...	Manager, W Leslie & Co ...	60, Dhurrumtollah Street ...	ditto	

912	Leslie. M	...	Assistant, W Leslie & Co	...	2, Chowringhee	...	ditto
913	Leslie, W	...	Partner, W Leslie & Co	...	2, Chowringhee	...	ditto
914	Leslie, Wm	...	Partner, Don, Watson & Co	...	5, Commercial Buildings	...	ditto
915	Levaro, J B	...	4th grade Clerk, Office of Examiner of Ordnance Factory Accounts in India.		1, Koila Ghât Street	...	ditto
916	Levy, Ezra S	...	Assistant, David Sassoon & Co, Ld	...	3, Fairlie Place	...	Jew
917	Lewes, A H	...	Assistant, Lovelock & Lewes	...	25, Mangoe Lane	...	Christian
918	Lewis, A	...	Draper, Hall and Anderson	...	31, Chowringhee	...	ditto
919	Lewis, G (Sr)	...	Assistant, Reuter's Telegram Co, Ld		102, Clive Street	...	ditto
920	Lewis, T	...	Assistant, Reuter's Telegram Co, Ld		102, Clive Street	...	ditto
921	Lewis, W	...	Assistant, Whiteaway, Laidlaw & Co		4, 5 & 6, Chowringhee	...	ditto
922	Lidderdale, J S	...	Assistant, Bombay Company, Ld	...	7-1, Lyons Range	...	ditto
923	Limpus, A	...	Assistant, Mackintosh, Burn & Co	...	8, Esplanade, East	...	ditto
924	Lindsay, B R C	...	Assistant, Turner, Morrison & Co	...	6, Lyons Range	...	ditto
925	Lindsay, R	...	Assistant, J Davies & Co	...	6, Mangoe Lane	...	ditto
926	Linsell, T P	...	Assistant, Kilburn & Co	...	4, Fairlie Place	...	ditto
927	Linton, P F	...	Assistant, F W Heilgers & Co	...	136, Canning Street	...	ditto
928	Lissant, S H	...	Assistant, G F Kellner & Co	...	32, Chowringhee	...	ditto
929	Lister, I L	...	Assistant, Macfie and Macdonald	...	13-1, Old Court House Street		ditto
930	Little, C G	...	Supervising Officer, Drawing Department, Surveyor-General's Office.		13, Wood Street	...	ditto
931	Little, F C	...	Assistant Traffic Superintendent and Personal Assistant to the Agent and Chief Engineer, B C R.		159-1, Bow Bazar Street	...	ditto
932	Lloyd, E H	...	Assistant, G F Kellner & Co	...	32, Chowringhee	...	ditto
933	Lloyd, J B	...	Partner, Shaw, Wallace & Co	...	20, Strand Road	...	ditto
934	Lodge, A	...	Assistant, Army and Navy Co-operative Society, Ld.		41, Chowringhee	...	ditto
935	Logie, A	...	Assistant, Bird & Co.	...	101-1, Clive Street	...	ditto
936	Long, A D	...	Assistant, W Newman & Co	...	4, Dalhousie Square	...	ditto
937	Longair, J P	...	Assistant, King Brothers	...	102, Clive Street	...	ditto
938	Longley, F A S	...	Assistant, McLeod & Co	...	31, Dalhousie Square	...	ditto
939	Longley, F L	...	Partner, Lemon Brothers	...	3 and 4, Hare Street	...	ditto
940	Lorimer, C E	...	Assistant, Calcutta Trades Association		Dalhousie Institute	...	ditto
941	Lovell, F, Captain	...	Assistant Conservator, Port Commissioners' Office.		Strand	...	ditto
942	Lovett, P	...	Assistant Editor, *Indian Daily News*		19, British Indian Street	...	ditto
943	Lowther, H N	...	Partner, W Haworth & Co	...	1, Mission Row	...	ditto

No.	Names.	Style or Calling.	Residence or place of business.	Religion.	Remarks.
	L				
944	Luckhurst, P J	... Assistant, W Leslie & Co ...	2, Chowringhee ...	Christian	
**945	Lumsden, J R	... Clerk, Foreign Office ...	Esplanade, West ...	ditto	
**946	Lumsden, J S E	... Assistant Examiner, 2nd grade, Office of Accountant-General, Military Department.	6, Esplanade Row, East ...	ditto	
947	Lyon, E A	... Assistant, J Thomas & Co ...	8, Mission Row ...	ditto	
948	Lyon, James	... Firm of Lyon and Lyon ...	Chowringhee ...	ditto	
949	Lyons, E	... Assistant, Government of India, Statistical Department.	7, Koila Ghât Street ...	ditto	
950	Lys, G D	... Assistant, Graham & Co ...	9, Clive Street ...	ditto	
	M				
951	Mabbett, Edward D	... Assistant, Cooke and Kelvey	20, Old Court House Street...	ditto	
952	Macdonald, J	... Sub-Accountant, Chartered Bank of India, Australia and China.	5, Council House Street ...	ditto	
953	Macdonald, K M	... 1st Assistant, Depositors' Department, Bank of Bengal.	Strand ...	ditto	
954	Macdonald, T J	... Traffic Inspector, Bengal Central Railway.	159-1, Bow Bazar Street ...	ditto	
955	MacDowell, N L	... Assistant, MacDowell & Co ...	7-1, Wellesley Place ...	ditto	
956	Macfie, W	... Partner, Macfie and Macdonald ...	13-1, Old Court House Street	ditto	
957	MacJohn, J	... Proprietor, J MacJohn & Co ...	37, Canning Street ...	ditto	
958	Mackellar, G B	... Assistant, Marshall Sons & Co, Ld ...	99, Clive Street ...	ditto	
959	Mackenzie, deC	... Assistant, Carritt, Moran & Co ...	9, Mission Row ...	ditto	
960	Mackenzie, H C	... Assistant Superintendent, Accountant-General's Office, Bengal.	The Treasury ...	ditto	
961	Mackenzie, J	... Assistant, Macneill & Co ...	2, Clive Ghât Street ...	ditto	
962	Mackenzie, J B	... Assistant Litho Printer, Surveyor-General's Office.	14, Wood Street ...	ditto	
963	Mackenzie, T R S	... Assistant Accountant, National Bank of India, Ld.	104, Clive Street ...	ditto	
964	Mackmurdo, E L	... Assistant, Commercial Bank of India, Ld.	5-1, Fairlie Place ...	ditto	

965	MacLaren, J	...	Assistant, Hamilton & Co	...	8, Old Court House Street ...	ditto
966	MacLean, A	...	Assistant Manager, John Dewar & Sons, Ld.		10, Hare Street ...	ditto
967	MacLeod, D Macgregor	...	Partner, D M MacLeod & Co	...	10, Clive Street ...	ditto
968	Macleod, J C	...	Assistant, McLeod & Co	...	31, Dalhousie Square ...	ditto
969	MacMahon, A	...	Clerk, Office of Superintendent, Government Printing, India.		8, Hastings Street ...	ditto
970	Macpherson, A G H	...	Partner, Pigott, Chapman & Co	...	1, Mission Row ...	ditto
971	Macpherson, H R	...	Assistant Accountant, Bank of Bengal		Strand ...	ditto
972	Macrodt, G F	...	Assistant, Graham & Co	...	9, Clive Street ...	ditto
973	MacVicar, R J	...	Assistant, Martin & Co	...	Jackson House ...	ditto
974	Madge, A A	...	Assistant, Macneill & Co	...	2, Clive Ghât Street ...	ditto
975	Madge, D H	...	Assistant, Balmer, Lawrie & Co	...	103, Clive Street ...	ditto
976	Madras, S O	...	Extra Assistant Superintendent, Surveyor-General's Office, Drawing Department.		13, Wood Street ...	ditto
977	Main, J	...	Assistant Accountant, Mercantile Bank of India, Ld.		28, Dalhousie Square ...	ditto
978	Maldin, A H	...	Inspector, Licensed Measurers' Department, Bengal Chamber of Commerce.		2, Clive Street ...	ditto
979	Manasseh, J S	...	Assistant, S Manasseh & Sons	...	7, Mission Row ...	Jew
980	Manders, T C	...	Assistant, Shaw, Wallace & Co	...	20, Strand Road ...	Christian
981	Mann, Jas Y	...	Assistant, Thomas, Duff & Co, Ld	...	15, Clive Row ...	ditto
982	Mansell, R V	...	Assistant, Finlay, Muir & Co	...	1, Clive Street ...	ditto
983	Mansfield, E H	...	Accountant, Office of Pay Examiner, Military Accounts Department, E C.		3, Koila Ghât Street ...	ditto
984	Mansfield, L E A	...	Superintendent, Office of Controller of Military Accounts, E C, Supply and Transport Branch.		3, Koila Ghât Street ...	ditto
985	Manuel, W	...	Superintendent, Foreign Office	...	Esplanade, West ...	ditto
986	Manuk, J M G	...	Partner, J G Bagram & Co	...	14-2, Clive Row ...	ditto

No.	Names.	Style or Calling.	Residence or place of business.	Religion.	Remarks.
	M				
987	Manuk, J T	... Gate Officer, Office of the Calcutta Port Commissioners.	Strand Road ...	Christian	
988	Manuk, M A	... Measurer, Bengal Chamber of Commerce.	2, Clive Street ...	ditto	
989	Mapleston, F N	... Assistant, Barlow & Co ...	37, Strand Road ...	ditto	
990	Marchant, H M L	... 5th class Clerk, Secretariat, Government of India, Public Works Department.	Imperial Secretariat Buildings	ditto	
991	Marinan, C T	... Clerk, Imperial Record Department...	Government Place, West ...	ditto	
992	Marling, A	... Assistant Superintendent, Office of the Calcutta Port Commissioners.	Strand Road ...	ditto	
993	Marriman, W	... Supervisor of Jetties, Office of the Calcutta Port Commissioners.	Strand Road ...	ditto	
994	Marsden, C N	... Assistant, Graham & Co ...	9, Clive Street ...	ditto	
995	Marsden, H C	... Clerk, Home Department ...	Home Department ...	ditto	
996	Marshall, D E	... Assistant, Mackenzie, Lyall & Co ...	2, Lyons Range ...	ditto	
997	Marshall, G	... Assistant Superintendent, Bengal Coal Co, Ld.	5, Fairlie Place ...	ditto	
998	Marshal, J D	... Assistant, Lyall, Marshall & Co ...	25, Mangoe Lane ...	ditto	
999	Martin, A D	... Clerk, Foreign Office ...	Esplanade, West ...	ditto	
1000	Martin, A H	... Assistant, Steuart & Co ...	8, Old Court House Corner ...	ditto	
1001	Martin, C H	... Assistant, Office of Secretary to the Government of India, Revenue and Agricultural Department, Agriculture Branch.	Imperial Secretariat Buildings	ditto	
1002	Martin, C R	... Inspector of Vacant Houses, Municipal Office.	Municipal Office ...	ditto	
1003	Martin, E D	... Assistant, Atkinson Brothers, Ld ...	13, Chowringhee ...	ditto	
1004	Martin, G F	... Assistant, Pigott, Chapman & Co ...	1, Mission Row ...	ditto	
1005	Martin, J G	... Assistant, Ashworth, Taylor & Co ...	134, Canning Street ...	ditto	
1006	Martin, J P	... Measurer, Bengal Chamber of Commerce.	2, Clive Street ...	ditto	
1007	Martin, M H	... Assistant, Bengal Chamber of Commerce.	2, Clive Street ...	ditto	

1008	Martin, O L	...	Clerk, Foreign Office	...	Esplanade, West	...	ditto
1009	Martin, P	...	Shed Officer, Office of the Calcutta Port Commissioners.		Strand Road	...	ditto
1010	Martyr, J P	..	Assistant, Office of Secretary to the Government of Bengal, Public Works Department.		Writers' Buildings	...	ditto
1011	Martyr, E L	...	Assistant to Director of Public Instruction, Bengal.		Writers' Buildings	...	ditto
1012	Marum. J J	...	Examiner, Office of Superintendent, Government Printing, India.		8, Hastings Street	...	ditto
1013	Mason, H W T	...	Assistant, Turner, Morrison & Co	...	6, Lyons Range	...	ditto
1014	Master, A W	...	Assistant, P & O S N Co	...	19, Strand Road	...	ditto
1015	Matheison, A G	...	Assistant, Anderson, Wright & Co	...	22, Strand Road	...	ditto
1016	Mathew, H A W	...	Assistant Auditor, E I R	...	E I R House	...	ditto
1017	Mathews, J W	...	Assistant, Jessop & Co, Ld	...	93, Clive Street	...	ditto
1018	Mathewson, Francis	...	Superintendent, P & O S N Co	...	19, Strand Road	...	ditto
1019	Mathias, J C	..	Accountant, Office of Examiner of Ordnance Factory Accounts in India.		1, Koila Ghât Street	...	ditto
1020	Matlack, H	...	Assistant, Burk Brothers	...	2 & 4, Peter's Lane	...	ditto
1021	Maugey, E A	...	Assistant, Geo Beaver & Co	...	8-1, Dalhousie Square, East	...	ditto
1022	Maugey, J D	...	Jr. 2nd class Clerk, Lower Division, Office of Secretary to the Government of India, Military Department.		6, Esplanade, East	...	ditto
1023	Maunder, R A	...	Assistant, Government Account Department, Bank of Bengal.		Strand	...	ditto
1024	Mayall, E A	...	Assistant, Kilburn & Co	...	4, Fairlie Place	...	ditto
1025	Mayer, C	...	Measurer, Licensed Measurers' Department, Bengal Chamber of Commerce.		2, Clive Street	...	ditto
1026	Mayer, G	...	Assistant, Army and Navy Co-operative Society, Ld.		41, Chowringhee	...	ditto
1027	McAllen, H	...	Clerk of Works, Calcutta Water Works Department.		5, Corporation Street	...	ditto

No.	Names.	Style or Calling.	Residence or place of business.	Religion.	Remarks.
	M				
1028	McCann, T	... Superintendent, Accountant-General's Office, Bengal.	The Treasury ...	Christian	
1029	McCarthy, J	... Assistant, F & C Osler ...	12, Old Court House Street ...	ditto	
1030	McClure, D S	... Head Assistant, Branch Department, Bank of Bengal.	Strand ...	ditto	
1031	McCombie, G S	... Assistant, Finlay, Muir & Co ...	1, Clive Street ...	ditto	
1032	McCulloch, W M	... Sub-Accountant, Chartered Bank of India, Australia and China.	5, Council House Street ...	ditto	
1033	McDonald, Angus	... Manager of Eng. Department, D T Keymer & Co.	1-1, Council House Street ...	ditto	
1034	McDonnell, T	... Assistant, Office of Secretary to the Government of India, Revenue and Agricultural Department, Emigration Branch.	Imperial Secretariat Buildings	ditto	
1035	McEwan, F E	... Assistant, Anderson, Wright & Co ...	22, Strand Road ...	ditto	
1036	McFarlane, A C	... Assistant, Place, Siddons and Gough	1, Commercial Buildings ...	ditto	
1037	McGinn, W G	... Assistant, Shrager Brothers ...	28, Dalhousie Square ...	ditto	
1038	McGlashon, John	... Resident Engineer, Office of the Calcutta Port Commissioners.	Strand Road ...	ditto	
1039	McInerney, J F H	... Accountant, Office of the Calcutta Port Commissioners.	Strand Road ...	ditto	
1040	McInnes, P J	... Assistant, W Leslie & Co ...	2, Chowringhee ...	ditto	
1041	McIntyre, A N	... Laboratory Assistant, Office of Electrical Engineer to the Government of Bengal.	58, Chowringhee ...	ditto	
1042	McIntyre, R L	... Assistant, King Brothers ...	102, Clive Street ...	ditto	
1043	McKechnie, D	... Assistant, Lovelock and Lewes ...	25, Mangoe Lane ...	ditto	
1044	McKenzie, A E	... Assistant, F W Heilgers & Co ...	136, Canning Street ...	ditto	
1045	McLatchie, A L	... Assistant, Balmer, Lawrie & Co ...	103, Clive Street ...	ditto	
1046	McLean, C S	... Assistant, Bengal Secretariat, General and Revenue Departments.	Writers' Buildings ...	ditto	
1047	McLeavy, G E	... Accountant, W H Harton & Co ...	30, Strand Road ...	ditto	

1048	McLeod, D	...	Assistant, Army and Navy Co-operative Society, Ld.	41, Chowringhee ...	ditto
**1049	McMahon, A	...	Assistant, Office of Secretary to the Government of India, Legislative Department.	Legislative Department Office, 5, Esplanade, West.	ditto
1050	McPherson, R	...	Assistant, Thacker, Spink & Co ...	5, Government Place ...	ditto
1051	McVicar, R	...	Assistant, C Lazarus & Co ...	60, Bentinck Street ...	ditto
1052	Mead, G	...	Assistant, Whiteaway, Laidlaw & Co	4, 5 and 6, Chowringhee ...	ditto
1053	Meade, C J	...	Assistant Litho Printer, Surveyor-General's Office.	14, Wood Street ...	ditto
1054	Medland, J W	...	Assistant, Manton & Co ...	13, Old Court House Street ...	ditto
1055	Medley, Lewis	...	Assistant, A & J Main & Co, Ld ...	31, Dalhousie Square ...	ditto
1056	Medlycott, A	...	Assistant, Board of Revenue, L P ...	2, Bankshall Street ...	ditto
1057	Meik, A C	...	Printing Superintendent, E I R ...	E I R House	ditto
1058	Mendes, E L	...	3rd grade Accountant, Office of Examiner, P W Accounts, Bengal.	8, Lyons Range ...	ditto
**1059	Mendes, J M	...	Deputy Examiner, 1st grade, Office of Accountant-General, Military Department.	6, Esplanade Row, East ...	ditto
1060	Mendieta, R J	...	Clerk, Surveyor-General's Office, Correspondence Branch.	13, Wood Street ...	ditto
1061	Merry, G B	...	Assistant, J Thomas & Co ...	8, Mission Row ...	ditto
**1062	Meyer, A	...	4th class Senior Clerk, Upper Division, Office of Secretary to the Government of India, Military Department.	6, Explanade, East ...	ditto
1063	Meyer, R	...	Assistant, Becker, Gray & Co ...	7, Hastings Street ...	Jew.
1064	Michael, J A	...	Clerk, J G Bagram & Co ...	14-2, Clive Row ...	Christian
1065	Michael, P S	...	Assistant, McLeod & Co ...	31, Dalhousie Square ...	ditto
1066	Michie, C	...	Assistant, J Thomas & Co ...	8, Mission Row ...	ditto
1067	Mignon, S C	...	Assistant, Ralli Brothers ...	1 & 2, Church Lane ...	ditto
1068	Milchem, A E	...	Assistant, F & C Osler ...	12, Old, Court House Street ..	ditto
1069	Miller, G S	...	Assistant, Shaw, Wallace & Co ...	20, Strand Road ...	ditto
**1070	Mills, W D	...	Clerk, Office of Accountant-General, P W D.	Imperial Secretariat Buildings	ditto
1071	Milne, A W	...	Assistant, George Henderson & Co ...	100, Clive Street ...	ditto
1072	Milne, T A	...	Registrar, Surveyor-General's Office, Correspondence Branch.	13, Wood Street ...	ditto

No.	Names.	Style or Calling	Residence or place of business.	Religion.	Remarks.
	M				
1073	Milne, W J	... Assistant, Williamson, Magor & Co...	4, Mangoe Lane ...	Christian	
1074	Milsted, W P S	... Principal, Armenian College ...	Armenian College ...	ditto	
1075	Minstrell, G	... Assistant, Jas Monteith & Co ...	21, Old Court House Street	ditto	
1076	Mitchell, A S	... Partner, Mitchell & Co ...	17, Chowringhee ...	ditto	
1077	Mitchell, D	... Assistant, Stein, Forbes & Co, Ld ...	12, Dalhousie Square ...	ditto	
1078	Mitchell, E A	... Assistant, W S Cresswell & Co ...	10, Hare Street ...	ditto	
1079	Mitchell, J	... Assistant Accountant, National Bank of India, Ld.	104, Clive Street ...	ditto	
*1080	Molinero, H	... Assistant, Office of Secretary to the Government of India, Legislative Department.	Legislative Department Office, 5, Esplanade, West,	ditto	
1081	Monnier, C E	... Measurer, Licensed Measurers' Department, Bengal Chamber of Commerce.	2, Clive Street ...	ditto	
1082	Monnier G A	... Measurer, Licensed Measurers' Department, Bengal Chamber of Commerce.	2, Clive Street ...	ditto	
1083	Monro J	... Assistant, Becker, Gray & Co ...	7, Hastings Street ...	ditto	
1084	Monteath, A M	... Assistant, Mackinnon, Mackenzie & Co	16, Strand ...	ditto	
1085	Montgomery, C R	... Agent, I R G P T W & Co, Ld ...	1-1, Fairlie Place ...	ditto	
1086	Moore, E A	... Assistant, Army and Navy Co-operative Society, Ld.	41, Chowringhee ...	ditto	
1087	Morby, W E A	.. Engineer, Kilburn & Co ...	4, Fairlie Place ...	ditto	
1088	More, J	... Assistant Accountant, National Bank of India, Ld.	104, Clive Street ...	ditto	
1089	Morgan, C	... Assistant, Great Eastern Hotel Co, Ld.	1, 2 & 3, Old Court House Street.	ditto	
1090	Morgan, F	... Assistant, Balmer, Lawrie & Co ...	103, Clive Street ...	ditto	
1091	Morgan, W	... Hackney Carriage Inspector, Calcutta Corporation	Municipal Office ...	ditto	
1092	Morley, M H A	... Assistant, Office of Secretary to the Government of India, Revenue and Agricultural Department, Patents Branch.	Imperial Secretariat Buildings	ditto	
1093	Morrison, D	... Assistant, Hall & Anderson ...	31, Chowringhee ...	ditto	
1094	Morrison, E J	... Partner, Morrison and Cottle ...	2, Esplanade Row, East ...	ditto	

1095	Morrison, H St J	...	Assistant, Office of Inspector-General of Police, L P.	Writers' Buildings	...	ditto
1096	Morrison, M	...	Assistant, W Haworth & Co ...	1, Mission Row	...	ditto
1097	Morrison, R M	...	Assistant, F W Heilgers & Co ...	136, Canning Street	...	ditto
1098	Morse, R W	...	Assistant, Bird & Co ...	101-1, Clive Street	...	ditto
**1099	Moses, O	...	Assistant, Office of Secretary to the Government of India, Legislative Dept.	Legislative Department Office, 5, Esplanade, West.		ditto
1100	Moses, P C	...	Overseer, Bengal Secretariat Press ...	Writers' Buildings	...	ditto
1101	Mudge, C R	...	Assistant, *Statesman* Office ...	3, Chowringhee	...	ditto
1102	Muir, J	...	Assistant, Macfie & Macdonald ...	13-1, Old Court House Street		ditto
1103	Muirhead, James	...	Assistant, Graham & Co ...	9, Clive Street	...	ditto
1104	Munjee, F M	...	Partner, J Fleming & Co ...	173, Dhurrumtollah Street	..	ditto
1105	Munn, H R D	...	Assistant Local Secretary, North British and Mercantile Insurance Office.	100, Clive Street	...	ditto
1106	Munro, C	...	Assistant, Graham & Co ...	9, Clive Street	...	ditto
1107	Murch, W H	...	Assistant, Lawrence & Mayo ...	16, Old Court House Street	...	ditto
1108	Murphy, F N	...	Assistant Litho Printer, Surveyor-General's Office.	14, Wood Street	...	ditto
**1109	Murphy, S K	...	Superintendent, Home Department	Home Department	...	ditto
1110	Murphy, W J	...	Assistant, Mackintosh, Burn & Co ...	8, Esplanade, East	...	ditto
1111	Murray, Alex R	...	Assistant, Thomas Duff & Co, Ld ...	15, Clive Row	...	ditto
1112	Murray, H B	...	Accountant, British American Tobacco Co, Ld.	95, Clive Street	...	ditto
1113	Musgrove, A J	...	Draftsman, Surveyor-General's Office, Drawing Department.	13, Wood Street	...	ditto
1114	Musgrove, L H	...	Engraver, Engraving Department, Surveyor-General's Office.	13, Wood Street	...	ditto
1115	Mylne, A R	...	Official Reporter, Municipal Office ...	Municipal Office	...	ditto
1116	Mytton, H F	...	Assistant, James Arbuthnot & Co ...	3, Mangoe Lane	...	ditto
	N					
**1117	Nathaniel, H D	...	Clerk, Office of Accountant-General, P W D.	Imperial Secretariat Buildings		ditto
1118	Neathan, A P	...	Assistant, Francis, Harrison, Hathaway & Co.	13, Government Place, East ...		ditto
1119	Nehemiah, T K	...	Assistant, Mackinnon, Mackenzie & Co	16, Strand	..	ditto

No	Names.	Style or Calling.	Residence or place of business.	Religion.	Remarks.
	N				
1120	Nelson, G P	... Partner, Meugens, King and Simson	102, Clive Street ...	Christian	
1121	Nelson, A S	... Draftsman, Surveyor-General's Office, Drawing Department.	13, Wood Street ...	ditto	
1122	Nesbitt, H K	... Assistant, Kilburn & Co ...	4, Fairlie Place ...	ditto	
1123	Newell, A F	... Assistant, John King & Co ...	40, Strand ...	ditto	
1124	Newland, W J	... Extra Assistant Superintendent, Drawing Department, Surveyor-General's Office.	13, Wood Street ...	ditto	
1125	Newman, H	... Assistant Editor, *Englishman* ...	9, Hare Street ...	ditto	
1126	Newman, J G	... Assistant, Ralli Brothers ...	1 & 2, Church Lane ...	ditto	
1127	Niccachi, M P	... Assistant, Ralli Brothers ..	1 & 2, Church Lane ...	ditto	
1128	Nickels, E J	... Measurer, Bengal Chamber of Commerce.	2, Clive Street ...	ditto	
1129	Nickels, H G	... Measurer, Bengal Chamber of Commerce.	2, Clive Street ...	ditto	
1130	Nicol, R	... Assistant, Mackintosh, Burn & Co	8, Esplanade, East ...	ditto	
1131	Nicoll, T	... Partner, King Brothers ...	102, Clive Street ...	ditto	
1132	Nicoll, T	... Manager, City Press ...	12, Bentinck Street ...	ditto	
*1133	Nile, E L	... Clerk, Foreign Office ...	Esplanade, West ...	ditto	
1134	Noad, P K	... Assistant, Jessop & Co, Ld ...	93, Clive Street ...	ditto	
1135	Noble, V A	... Assistant, Turner, Morrison & Co ...	6, Lyons Range ...	ditto	
1136	Nollar, A	... Assistant, G E Hotel Co, Ld ...	1, 2 & 3, Old Court House Street.	ditto	
1137	Noney, E A	... Assistant, Ernsthausen, Ld ...	9, Clive Row ...	ditto	
1138	Norman, F	... Assistant, J B Norton & Sons ...	1 & 2, Old Court House Corner	ditto	
1139	Norman, H N	... Assistant, George Henderson & Co ...	100, Clive Street ...	ditto	
1140	Norman, S F	... Sub-Assistant Superintendent, Drawing Department, Surveyor-General's Office.	13, Wood Street ...	ditto	
1141	Norton, H	... Assistant, Ralli Brothers ...	1 & 2, Church Lane ...	ditto	
1142	Norton, H B	... Partner, J B Norton and Sons ...	1-2, Old Court House Corner	ditto	
*1143	Nyss, C D	... 3rd class Senior Clerk, Upper Division, Office of Secretary to the Government of India, Military Department.	6, Esplanade, East ...	ditto	

O

1144	Oakley, E J	...	Assistant, Kilburn & Co	...	4, Fairlie Place	... ditto
1145	O'Brien, S C	...	Assistant, Hamilton & Co	...	8, Old Court House Street	... ditto
1146	O'Connell, G	...	Assistant Superintendent, Accountant-General's Office, Bengal.		The Treasury	... ditto
1147	Odgers, L	...	Assistant, H Clark & Co	...	5, Old Court House Street	.. ditto
1148	O'Donoghue, J H	...	Assistant, Barry & Co	...	5, Lyons Range	... ditto
1149	Ogg, Jas D	...	Assistant, Thomas Duff & Co, Ld	...	15, Clive Row	... ditto
1150	Ogilvy, L W	...	Assistant, Gillanders, Arbuthnot & Co		8, Clive Street	... ditto
1151	Ollenbach, E C	...	Engraver, Engraving Department, Surveyor-General's Office.		13, Wood Street	... ditto
1152	Olphert, H E	...	Assistant, Blacker & Co	...	2, Clive Street	... ditto
1153	O'Malley, C R	...	Assistant, Allen Brothers & Co	...	1, New China Bazar Street	... ditto
1154	Ord, Knox G	...	Assistant, Petrocochino Brothers	...	4, Clive Ghât Street	... ditto
*.*1155	O'Reilly, J	...	3rd class Clerk, Secretariat, Government of India, Public Works Department.		Imperial Secretariat Buildings	ditto
1156	Orr, D	...	Assistant, Jessop & Co, Ld	..	93, Clive Street	... ditto
1157	Osgerby, W	...	Assistant Accountant, Bank of Calcutta, Ld.		7, Clive Row	... ditto
*.*1158	O'Sullivan, D	...	Junior 4th class Clerk, Lower Division, Office of Secretary to the Government of India, Military Department.		6, Esplanade, East	... ditto
1159	Ottewill, J	...	Manager, Harold & Co	...	3, Dalhousie Square	... ditto
1160	Otto, E C	...	4th class Assistant, Office of Controller of Military Accounts, E C, Supply and Transport Branch.		3, Koila Ghât Street	... ditto
*.*1161	Owen, E B	...	Accountant, Accountant-General's Office, P W D.		Imperial Secretariat Buildings	ditto
1162	Owen, M M	...	Assistant, W Newman & Co	...	4, Dalhousie Square	... ditto
	P					
1163	Page, C Percy	...	Assistant, British American Tobacco Co, Ld.		95, Clive Street	... ditto
1164	Paige, R H	...	Assistant, Whiteaway Laidlaw & Co		4, 5 & 6, Chowringhee	... ditto
*.*1165	Painter, J	...	Clerk, Foreign Office	...	Esplanade, West	... ditto
1166	Palmer, E W	...	Measurer, Licensed Measurers' Department, Bengal Chamber of Commerce.		2, Clive Street	... ditto

No.	Names.	Style or Calling.	Residence or place of business.	Religion.	Remarks.
	P				
1167	Plamer, H	... Managing Assistant, Rutledge & Co	1, Sandel Street ...	Christian	
1168	Palmer, H P	... Measurer, Licensed Measurers' Department, Bengal Chamber of Commerce.	2, Clive Street ...	ditto	
1169	Panioty, N	... Assistant, Ralli Brothers ...	1 & 2, Church Lane ...	ditto	
1170	Papagheeka, M	... Assistant, Macfie and Macdonald ...	13-1, Old Court House Street	ditto	
1171	Parker, J F	... Assistant, Thacker, Spink & Co ...	5, Government Place ...	ditto	
1172	Parkinson, R	... Sub-Editor, *Englishman* Office ...	9, Hare Street ...	ditto	
1173	Parkman, A E	... Partner, H Clark & Co ...	5, Old Court House Street ...	ditto	
1174	Parr, G	... Assistant, Francis, Harrison, Hathaway & Co.	13, Government Place, East...	ditto	
1175	Parrott, P	... Assistant, Kilburn & Co ...	4, Fairlie Place ...	ditto	
1176	Parry, T D	... Engineer, Kilburn & Co ...	4, Fairlie Place ...	ditto	
1177	Parsons, D	... Assistant, J Thomas & Co ...	8, Mission Row ...	ditto	
1178	Parsons, D J	... Assistant, Moran & Co ...	3, Mangoe Lane ..	ditto	
1179	Parsons, R	... Assistant, Office of Secretary to the Government of India, Finance and Commerce Department.	Treasury Buildings ...	ditto	
1180	Parton, H H	... Assistant, Army & Navy Co-operative Society, Ld.	41, Chowringhee ...	ditto	
1181	Parton, H H	... Assistant, Hall & Anderson ...	31, Chowringhee ...	ditto	
1182	Pascal, Edward Howard	... Head Assistant, Bengal Secretariat, Municipal Department.	Writers' Buildings ...	ditto	
1183	Patrick, J	... Assistant, O Steel & Co ...	14, Old Court House Street...	ditto	
1184	Patterson, C C	... Assistant, Becker, Gray & Co ...	7, Hastings Street ...	ditto	
1185	Pattinson, J H	... Assistant, The Arracan Co, Ld ...	28, Dalhousie Square ...	ditto	
1186	Paul, H M	.. Inspector, Licensed Measurers' Department, Bengal Chamber of Commerce.	2, Clive Street ...	ditto	
*1187	Paul, J C	... Clerk, Office of Accountant-General, Public Works Department.	Imperial Secretariat Buildings	ditto	
*1188	Paxton, P E	... Clerk, Foreign Office ...	Esplanade, West ...	ditto	
1189	Pearce, A W	... Assistant, W Leslie & Co ...	2, Chowringhee ...	ditto	
1190	Pearce, C M	... Coal Manager, Traffic Department, E I R.	E I R House ...	ditto	
1191	Peat, H M	... Assistant, Bird & Co ...	101-1, Clive Street ...	ditto	
1192	Pegler, E H	... Assistant Manager, Eastern Landing, Clearing and Forwarding Co.	7, Dalhousie Square ...	ditto	

1193	Peirce, A	...	Assistant Engineer, Water-Works. Municipal Office.	5, Corporation Street ...	ditto
1194	Peirson, H N	...	Assistant, Kettlewell, Bullen & Co ...	21, Strand ...	ditto
1195	Pell, T O	...	Deputy Accountant, Calcutta Mint ...	47, Strand Road, North ...	ditto
1196	Pennycuick, R J	...	Assistant, Whiteaway, Laidlaw & Co	4, 5 & 6, Chowringhee Road	ditto
1197	Penrose, W H	...	Extra Assistant Superintendent, Surveyor-General's Office, Drawing Department.	13, Wood Street ...	ditto
1198	Penstone, G W	...	Assistant, Ralli Brothers ...	1 & 2, Church Lane ...	ditto
1199	Pereira, A E	...	Pipe layer, District Engineer's Office, District No. I, Municipal Office.	79, Cornwallis Street ...	ditto
1200	Pereira, C	...	Assistant Superintendent, Office of the Calcutta Port Commissioners.	Strand Road ...	ditto
1201	Pereira, E J H	...	Jr. 4th class Clerk, Lower Division, Office of Secretary to the Government of India, Military Department.	6, Esplanade, East ...	ditto
1202	Pereira, O S	...	Superintendent, Comptroller-Genelras' Office.	The Treasury ...	ditto
1203	Pereira, S	...	Assistant, Office of Secretary to the Government of India, Finance and Commerce Departments.	Treasury Buildings ...	ditto
1204	Pereira, W A	...	Measurer, Licensed Measurers' Department, Bengal Chamber of Commerce.	2, Clive Street ...	ditto
1205	Perris, S A	...	Assistant, E D Sassoon & Co ...	2 & 3, Clive Row ...	Hebrew
1206	Petrocochino, E S	...	Assistant, Petrocochino Brothers ...	4, Clive Ghât Street ...	Christian
1207	Phelps, S G	...	Assistant, Phelps & Co ...	15, Old Court House Street ...	ditto
1208	Phillipowsky, C E	...	Assistant, Ralli Brothers ...	1 & 2, Church Lane ...	ditto
1209	Phillips, A W	...	Assistant, Thos. Cook & Son ...	9, Old Court House Street ...	ditto
1210	Phillips, F E	...	Assistant, Turner, Morrison & Co ...	6, Lyons Range ...	ditto
1211	Phillips, H	...	Assistant, Francis, Harrison, Hathaway & Co.	13, Government Place, East ...	ditto
1212	Phillips, H A	...	Assistant Secretary, G E Hotel Co, Ld.	1, 2 & 3, Old Court House Street.	ditto
1213	Phillips, R A	...	Assistant, G E Hotel Co, Ld ...	1, 2 & 3, Old Court House Street.	ditto

No.	Names.	Style or Calling.	Residence or place of business.	Religion.	Remarks.
	P				
1214	Picachy, D	... Assistant Superintendent, Accountant-General's Office, Bengal.	The Treasury ...	Christian.	
1215	Picachy, J	... Accountant, Office of Protector of Emigrants and Superintendent of Emigration.	55, Chowringhee Road ...	ditto	
1216	Pickford, C E	... Assistant, Barlow & Co ...	37, Strand Road ...	ditto	
1217	Pickford, G	... Assistant, Begg, Dunlop & Co ...	12, Mission Row ...	ditto	
*1218	Pigott, W C	... 4th class Clerk, Secretariat, Government of India, P W Dept.	Imperial Secretariat Buildings	ditto	
1219	Pike, H B	... Sub-Accountant, Hongkong & Shanghai Banking Corporation.	31 Dalhousie Square ...	ditto	
1220	Pilley, A E	... Assistant Copperplate Printer & Store-keeper, Engraving Department, Surveyor-General's Office.	13, Wood Street ...	ditto	
*1221	Piner, J	... Clerk, Foreign Office ...	Esplanade, West ...	ditto	
1222	Piree, W	... Assistant, James Murray & Co ...	12, Government Place ...	ditto	
*1223	Pittar, A H	... Assistant, Office of Secretary to the Government of India, Revenue and Agricultural Department, Revenue Branch.	Imperial Secretariat Buildings	ditto	
1224	Pittar, H C W	... Assistant, Ernsthausen, Ld ...	9, Olive Row ...	ditto	
1225	Platnauer, S L	... Partner, Simpson and Platnauer ...	29, Bentinck Street ...	Jew	
1226	Playfair, G F	... Assistant, Grindlay & Co ...	11, Hastings Street ...	Christian	
1227	Plummer, E T	... Assistant, George Henderson & Co ...	100, Clive Street ...	ditto	
1228	Plummer, H L	... Assistant, George Henderson & Co ...	100, Clive Street ...	ditto	
1229	Pogose, P M	.. Travelling Auditor, Office of the Calcutta Port Commissioners.	Strand Road ...	ditto	
1230	Ponting, H	... Assistant, Phelps & Co ...	15, Old Court House Street ...	ditto	
1231	Pooler, H G	... Assistant, F & C Osler ...	12, Old Court House Street	ditto	
1232	Pope, C M	... Assistant, Shaw, Wallace & Co ...	20, Strand Road ...	ditto	
*1233	Pope, E J	... 2nd class Clerk, Secretariat, Government of India, P W D.	Imperial Secretariat Buildings	ditto	

1234	Popham, G A	...	Head Assistant, Office of the Superintending Engineer, Central Circle.	Writers' Buildings	...	ditto
1235	Porter, W T	...	Accountant, P W D, Office of Government Examiner of Railway Accounts.	E I R House	...	ditto
*.*1236	Potenger, G E	...	Clerk, Foreign Office ...	Esplanade, West	...	ditto
1237	Potnoy, S	..	Proprietor, Cosmopolitan Hotel ...	39, Bentinck Street	...	Jew
1238	Potter, L R	...	Teacher, LaMartiniére College ...	11, Loudon Street	...	Christian
1239	Powell, E	...	Measurer, Licensed Measurers' Department, Bengal Chamber of Commerce.	2, Clive Street	...	ditto
*.*1240	Powell, T	...	Clerk, Foreign Office ...	Esplanade, West	...	ditto
1241	Powell, W H	...	Assistant, Jessop & Co, Ld. ...	93, Clive Street	...	ditto
1242	Pratt, C H	..	Assistant, Hamilton & Co ...	8, Old Court House Street	...	ditto
1243	Pratt, T R	...	Manager, Davidson & Co, Ld ...	2, Lall Bazar	..	ditto
1244	Preaswell, H E	...	Claims Clerk, Traffic Department, E I R.	E I R House	...	ditto
1245	Preaswell, T G	...	Offg. Chief Clerk, Traffic Manager's Office, E I R.	E I R House	...	ditto
1246	Price, A A	..	Personal Assistant to the Inspector-General of Civil Hospitals and Sanitary Commissioner for Bengal.	Writers' Buildings	...	ditto
1247	Price, C F	...	Assistant, Turner, Morrison & Co. ...	6, Lyons Range	...	ditto
1248	Price, F G	...	Assistant, A and J Main & Co, Ld ...	31, Dalhousie Square	...	ditto
*.*1249	Price, J H	...	Assistant, Bengal Secretariat, Judicial, Political and Appointment Departments.	Writers' Buildings	...	ditto
1250	Pritchard, P H	...	Accountant, Delhi and London Bank, Ld.	4, Council House Street	...	ditto
1251	Proctor, A	...	Assistant, Whiteaway, Laidlaw & Co	4, 5 and 6, Chowringhee	...	ditto
1252	Prowling, A	...	Assistant, W Leslie & Co ...	2, Chowringhee	...	ditto
1253	Pryce, O H D	...	Time-Table Clerk, Chief Superintendent's Office, E I R.	E I R House	...	ditto
1254	Pryce, W A	...	Assistant, Mackintosh, Burn & Co...	8, Esplanade, East	...	ditto
1255	Pugh, R A C	...	Assistant, Norman Brothers ...	1/1, Vansittart Row	...	ditto

No	Name	Style or Calling.	Residence or place of business.	Religion.	Remarks.
	P				
1256	Pym, D	... Assistant, Williamson, Magor & Co ...	4, Mangoe Lane ...	Christian	
**1257	Pyster, C E	... Superintendent, Foreign Office ...	Esplanade, West ...	ditto	
1258	Pyne, C A B	... Assistant, Balmer, Lawrie & Co ...	103, Clive Street ...	ditto	
	Q				
1259	Quantin, D J	... Measurer, Licensed Measurers' Department, Bengal Chamber of Commerce.	2, Clive Street ...	ditto	
1260	Quarmby, T W T	... Assistant, Balmer, Lawrie & Co ...	103, Clive Street ...	ditto	
	R				
1261	Rackham, J E	... Draper, Hall and Anderson ...	31, Chowringhee ...	ditto	
1262	Rae, H P M	... Assistant, Bombay Company, Ld ...	7—1, Lyons Range ...	ditto	
**1263	Raeburn, H C	... Accountant, Accountant-General's Office, P W D.	Imperial Secretariat Buildings	ditto	
1264	Ralli, A C	... Assistant, Ralli Brothers ...	1 & 2, Church Lane ...	ditto	
**1265	Ramsay, J	... 6th class Clerk, Secretariat, Government of India, P W D.	Imperial Secretariat Buildings	ditto	
1266	Rance, J	... Assistant, Jessop & Co, Ld ...	93, Clive Street ...	ditto	
1267	Raphael, J H	... Sub-Manager, *Statesman* Office ...	3, Chowringhee ...	ditto	
1268	Ravenscroft, S U	... Assistant, Litho. Branch, Surveyor-General's Office.	14, Wood Street ...	ditto	
1269	Rayner, F S	... Assistant, Turner, Morrison & Co ...	6, Lyons Range ...	ditto	
**1270	Reaks, R R	... Clerk, Home Department ...	Home Department ...	ditto	
1271	Rean, H	... Assistant, Balmer, Lawrie & Co ...	103, Clive Street ...	ditto	
1272	Rebeiro, E J	... Assistant Superintendent, Accountant-General's Office, Bengal.	The Treasury ...	ditto	

1273	Rebeiro, G	...	Examiner, Office of Superintendent, Government Printing, India.	8, Hastings Street ...	ditto
1274	Rebello, G V	...	Accountant, Office of Controller of Military Accounts, E C, Accounts Branch.	Military Accounts Department Buildings, 3, Koila Ghat Street.	ditto
1275	Rees, W S	...	Assistant, Traill & Co ...	20, British Indian Street ...	ditto
1276	Reid, J	...	Sub-Accountant, Chartered Bank of India, Australia and China.	5, Council House Street ...	ditto
1277	Remedios, H	...	Examiner, Govt. Printing, India ...	8, Hastings Street ...	ditto
1278	Rennison, C	...	Assistant, Williamson, Magor & Co...	4, Mangoe Lane ...	ditto
1279	Renton, J D	...	Assistant, Ralli Brothers ..	1 & 2, Church Lane ...	ditto
1280	Reynell, B	...	Assistant, Graham & Co ...	9, Clive Street ...	ditto
1281	Reynolds, W F	...	Assistant, Macneill & Co ...	2, Clive Ghat Street ...	ditto
1282	Reynolds, W J	...	Assistant, G E Hotel Co, Ld ...	1, 2 & 3, Old Court House Street.	ditto
1283	Rhodes, C W	...	Assistant, Hoare, Miller & Co ...	38, Strand ...	ditto
1284	Ribeiro, T W	...	Assistant, Mackintosh, Burn & Co ...	8, Esplanade, East ...	ditto
1285	Rich, E B (Jr.)	...	General Assistant, Standard Oil Company of New York.	8, Dalhousie Square, East ...	ditto
1286	Richards, R A	...	Assistant Accountant, Bank of Bengal	Strand ...	ditto
1287	Richardson, R G	...	Superintendent, Office of Secretary to the Government of India, Revenue and Agricultural Department, Patents Branch.	Imperial Secretariat Buildings	ditto
*1288	Ridge, G R	...	Assistant, Office of Secretary to the Government of India, Legislative Department.	Legislative Department Office, 5, Esplanade, West.	ditto
1289	Ridley, H B	...	Assistant, South British Fire and Marine Insurance Co.	1, Lall Bazar Street ...	ditto
1290	Rigordy, Carlisle	...	Assistant, Ernsthausen, Ld ...	9, Clive Row ...	ditto
1291	Rivaz, C W	...	Assistant, Anderson, Wright & Co...	22, Strand Road ...	ditto
1292	Roberts, B O	...	Assistant, Becker, Gray & Co ...	7, Hastings Street ...	ditto
1293	Roberts, J E	...	Joint Railway Foreman, Office of the Calcutta Port Commissioners.	Strand Road ...	ditto
1294	Robertson, E J		Check Officer, Office of the Calcutta Port Commissioners.	Strand Road ...	ditto
1295	Robeon, F E	...	Assistant Superintendent, Traffic Department, E I R.	E I R House ...	ditto
1296	Robertson, Jas	...	Assistant, Thomas Duff & Co, Ld ...	15, Clive Row ...	ditto

No.	Names.	Style or Calling.	Residence or place of business.		Remarks
	R				
1297	Robertson, J A	... Superintendent, Government of India, Statistical Department.	7, Koila Ghat Street	...	Christian
1298	Robertson, J R	... Acting Accountant, National Bank of India, Ld.	104, Clive Street	...	ditto
1299	Robertson, T	... Assistant, Lardner & Co ...	4, Commercial Buildings	...	ditto
1300	Robins, F J	... Passing Officer, Bank of Bengal ...	Strand	...	ditto
1301	Robinson, E S	... Hackney Carriage Inspector, Calcutta Corporation.	Municipal Office	...	ditto
1302	Robinson, J E	... Head Reader, Caledonian Steam Printing Works.	3, Wellesley Place	...	ditto
1303	Robson, J	... Engineer, Presidency Jail Press ...	Presidency Jail Press	...	ditto
1304	Robson, Herbert	... General Manager, D T Keymer & Co	1-1, Council House Street	...	ditto
1305	Robson, W	... Assistant, Reuter's Telegram Co, Ld	102, Clive Street	...	ditto
1306	Rodgers, J R	... Assistant, Jessop & Co, Ld ...	93, Clive Street	...	ditto
*1307	Rodgers, J R	... Clerk, Foreign Office ...	Esplanade, West	...	ditto
1308	Rodrigues, A J	... Assistant Litho. Printer, Surveyor-General's Office.	14, Wood Street	...	ditto
*1309	Rodrigues, C A	... 6th class Senior Clerk, Upper Division, Office of Secretary to the Government of India, Military Department.	6, Esplanade, East	...	ditto
1310	Rodrigues, J A	... 2nd class Assistant, Office of Controller of Military Accounts, E C, Supply and Transport Branch.	3, Koila Ghât Street	...	ditto
1311	Rodrigues, J C	... Assistant, Manton & Co ...	13, Old Court House Street	...	ditto
1312	Rodrigues, M P	... Type-writer, Grindlay & Co ...	11, Hastings Street	...	ditto
1313	Rodrigues, N J	... Assistant, Catholic Orphan Press ...	4, Portuguese Church Street	...	ditto
1314	Rogers, A D	... Inspector, Licensed Measurers' Department, Bengal Chamber of Commerce.	2, Clive Street	...	ditto
1315	Rogers, C B	... Assistant, Government of India, Statistical Department.	7, Koila Ghât Street	...	ditto
*1316	Rogers, H	... Clerk, Foreign Office ...	Esplanade, West,	...	ditto
*1317	Rogers, H J	... 5th class Clerk, Secretariat, Government of India, Public Works Department.	Imperial Secretariat Buildings		ditto

1318	Ronald, P	...	Assistant, Lovelock and Lewes	...	25, Mangoe Lane	... ditto
1319	Rondeau, E C	...	Clerk, Foreign Office	...	Esplanade, West	... ditto
1320	Rope, E E	...	Assistant, Kilburn & Co	...	4, Fairlie Place	... ditto
1321	Rose, B A	...	Assistant, Thacker, Spink & Co	...	5, Government Place	... ditto
1322	Roseboom, G J	...	Assistant, G E Hotel Co, Ld	...	1, 2 & 3, Old Court House Street	ditto
1323	Ross, C	...	5th class Senior Clerk, Upper Division, Office of Secretary to the Government of India, Military Department.		6, Esplanade, East	... ditto
1324	Ross, G Hunt	...	Temporary Engineer, 1st Calcutta Division, P W D.		Writers' Buildings	... ditto
1325	Ross, J	...	Assistant, Mason, Hill & Rogers	...	19, Chowringhee	... ditto
1326	Ross, N M	...	Assistant, McLeod & Co	...	31, Dalhousie Square	... ditto
1327	Ross, T A	...	Manager, W H Harton & Co	...	30, Strand Road	... ditto
1328	Ross, W	...	Assistant, Whiteaway, Laidlaw & Co		4, 5 & 6, Chowringhee	... ditto
1329	Rostan, C	...	Clerk, Comptroller-General's Office	...	The Treasury	... ditto
1330	Rothera, G H	...	Chartered Accountant, Martin & Co		Jackson House	... ditto
1331	Roubaud, C E	...	Assistant, Marshall, Sons & Co, Ld	...	99, Clive Street	... ditto
1332	Rourke, G	...	Proprietor, A Hartman & Co	...	159 & 160, Dhurrumtollah Street.	ditto
1333	Rowcliffe, R H	...	Chief Accountant, Municipal Office	...	Municipal Office	... ditto
1334	Rowe, E A	...	Assistant, Morrison and Cottle	...	2, Esplanade Row, East	... ditto
1335	Roxby, H M	...	Assistant, Barlow & Co	...	37, Strand Road	... ditto
1336	Rozario, W S D	...	Examiner, Government Printing, India.		166, Dhurrumtollah Street	... ditto
1337	Rundlett, E A	...	Head Clerk, Surveyor-General's Office, Correspondence Branch.		13, Wood Street	... ditto
1338	Rundlett, J H	...	Assistant to General Traffic Manager, E I R.		E I R House	... ditto
1339	Rushton, G O	...	Assistant, Ralli Brothers	...	1 & 2, Church Lane	... ditto
1340	Rutherford, A	...	Assistant, Mason, Hill & Rogers	...	19, Chowringhee	... ditto
1341	Rutledge, D B	...	2nd class Senior Clerk, Upper Division, Office of Secretary to the Government of India, Military Department.		6, Esplanade, East	... ditto
1342	Ryan, M	...	Assistant Traffic Manager, E I R	...	E I R House	... ditto

No.	Name.	Style or Calling.	Residence or place of business.	Religion.	Remarks.
	R				
1343	Rymer, C O W	... Accountant, Bank of Calcutta, Ld ...	7, Clive Row ...	Christian	
1344	Rymer, L F	... Assistant Accountant, Alliance Bank of Simla, Ld.	8, Council House Street ...	ditto	
	S				
1345	Sampson, W	... Assistant, W Leslie & Co ...	2, Chowringhee ...	ditto	
*.*1346	Sanderson, R W	... Superintendent, Foreign Department	Esplanade, West ...	ditto	
*.*1347	Sanderson, W E K	... 4th class Senior Clerk, Upper Division, Office of Secretary to the Government of India, Military Department.	6, Esplanade, East ...	ditto	
1348	Sandford, C W	... Chief Superintendent, Accountant-General's Office, Bengal.	The Treasury ...	ditto	
1349	Sandwell, W R	... Chief Clerk, Chief Superintendent's Office, Traffic Department, E I R.	E I R House ...	ditto	
1350	Saner, E J	... Engineer, Kilburn & Co ...	4, Fairlie Place ...	ditto	
1351	Sansoni, G L	... Assistant, Cosmopolitan Hotel ...	39, Bentinck Street ...	ditto	
1352	Sarkies, W A	... 3rd class Assistant, Office of Controller of Military Accounts, E C, Supply and Transport Branch.	3, Koila Ghat Street ...	ditto	
1353	Sassoon, A N	... Assistant, E D Sassoon & Co ...	2 & 3, Clive Row ...	Hebrew	
1354	Saubolle, L V	... Assistant, Balmer, Lawrie & Co ...	103, Clive Street ...	Christian	
1355	Saul, I S	... Assistant, David Sassoon & Co, Ld ...	3, Fairlie Place ...	Jew	
1356	Saunders, C	... Assistant, Ralli Brothers ...	1 & 2, Church Lane ...	Christian	
1357	Saunders, E J	... Assistant, Martin & Co ...	Jackson House . .	ditto	
1358	Saunders, W	... Assistant, Mason, Hill & Rogers ...	19, Chowringhee ...	ditto	
1359	Sawyer, E J	... Assistant, Hall & Anderson ...	31, Chowringhee ...	ditto	
1360	Scallan, F R C	... Engraver, Engraving Department, Surveyor-General's Office.	13, Wood Street ...	ditto	
1361	Scaramanga, P A	... Assistant, Ralli Brothers ...	1 & 2, Church Lane ...	ditto	
1362	Schaumburg, J L	... Assistant, Pelican and British Empire Life Office.	12, Dalhousie Square ...	ditto	

1363	Schiller, F	...	Assistant, Hall & Anderson ...	31, Chowringhee	...	ditto
**1364	Schofield, F W	...	Clerk, Home Department ...	Home Department	...	ditto
1365	Schumacher, G A	...	Assistant, Bird & Co ...	101-1, Clive Street	...	ditto
1366	Scotney, F J	...	Assistant, Army and Navy Co-Operative Society, Ld.	41, Chowringhee	...	ditto
1367	Scott, A	...	Assistant, Mackinnon, Mackenzie & Co	16, Strand	...	ditto
1368	Scott, F	...	Assistant Accountant, National Bank of India, Ld.	104, Clive Street	...	ditto
1369	Scott, J	...	District Traffic Manager, Office of the Calcutta Port Commissioners.	Strand Road	...	ditto
**1370	Scott, R C	...	Assistant, Office of Secretary to the Government of India, Revenue and Agricultural Department, Forest Branch.	Imperial Secretariat Buildings		ditto
1371	Scutt, G P S	...	Personal Assistant to Secretary, Bank of Bengal.	Strand	...	ditto
1372	Seaman, W C	...	Assistant, Standard Life Assurance Co.	32, Dalhousie Square	...	ditto
1373	Sebright, C	...	Assistant, Dykes & Co ...	29, Waterloo Street	...	ditto
1374	Selfe, P A	...	Superintendent, Government Account Department, Bank of Bengal.	Strand	...	ditto
1375	Selkirk, A	...	Assistant Accountant, Alliance Bank of Simla, Ld.	8, Council House Street	...	ditto
1376	Severs, B	...	Assistant Auditor, E I R ...	E I R House	...	ditto
**1377	Shapcott, J D	...	Superintendent, Office of Secretary to the Government of India, Department of Revenue and Agriculture, Agriculture Branch.	Imperial Secretariat Buildings		ditto
1378	Sharp, W	...	Assistant, A and J Main & Co, Ld ...	31, Dalhousie Square	...	ditto
1379	Sharpe, F J	...	Assistant, J Monteith & Co ...	21, Old Court House Street ..		ditto
1380	Sharpe, W R	...	Assistant, Grindlay & Co ...	11, Hastings Street	...	ditto
1381	Shavier, C	...	Assistant Master, Calcutta Free School.	58, Free School Street	...	ditto
1382	Shea, W	...	Reader, Bengal Secretariat Press ...	Writers' Buildings	...	ditto

No.	Names.	Style or Calling.	Residence or place of business.	Religion.	Remarks.
	S.				
1383	Shepherd, W S W	... 2nd grade Assistant Examiner, Office of Controller of Military Accounts, E C.	3, Koila Ghat Street ...	Christian	
1384	Sherman, H M	... Assistant, Turner, Morrison & Co ...	6, Lyons Range ...	ditto	
1385	Sherman, V	... Assistant, Bank of Calcutta, Ld. ...	7, Clive Row ...	ditto	
1386	Shields, H F	... Assistant, Office of Secretary to the Government of India, Finance and Commerce Department.	Treasury Buildings ...	ditto	
1387	Shields, J	... Assistant, James Murray & Co ...	12, Government Place ...	ditto	
1388	Shilstone, W A	... 3rd Class Clerk, Secretariat, Government of India, P. W. D.	Imperial Secretariat Buildings	ditto	
1389	Short, F M	... Assistant, Balmer, Lawrie & Co ...	103, Clive Street ...	ditto	
1390	Siddle, C J R	... Establishment Clerk to T M, Office of the Calcutta Port Commissioners.	Strand Road ...	ditto	
1391	Siddons, G	... Engineer, Walter, Locke & Co, Ld...	4, Esplanade ...	ditto	
1392	Siddons, J B	... Chief Superintendent, Excise Preventive Establishment, Calcutta Collectorate.	3, Charnock Place ...	ditto	
1393	Sidey, G L	... Assistant, O Steel & Co ...	14, Old Court House Street ...	ditto	
1394	Sim, J D Keith	.. Assistant, Commercial Union Assurance Co, Ld.	29, Dalhousie Square ...	ditto	
1395	Simmons, J F	... Assistant, F W Heilgers & Co ...	136, Canning Street ...	ditto	
1396	Simpson, A B	... Assistant, Graham & Co ...	9, Clive Street ...	ditto	
1397	Simpson, H J	... Assistant, Shaw, Wallace & Co ...	20, Strand Road ...	ditto	
1398	Simpson, J W A	... Assistant, F W Heilgers & Co ...	136, Canning Street ...	ditto	
1399	Simpson, R	... Assistant, Board of Revenue, L. P....	2, Bankshall Street ...	ditto	
1400	Simpson, W N	.. Assistant Turner, Morrison & Co ...	6, Lyons Range ...	ditto	
1401	Sinaes, M J	... Assistant Examiner, Accountant-General's Office, Public Works Department.	Imperial Secretariat Buildings	ditto	

1402	Sinclair, W L	...	Assistant, Davis Leech & Co	...	11, Government Place	... ditto
1403	Sinclair, W T	...	Assistant, Bathgate & Co	...	19, Old Court House Street	... ditto
1404	Siret, E R	...	Assistant, Bengal Secretariat, Public Works Department.		Writers' Buildings	... ditto
1405	Skinner, H E	...	Assistant, Jessop & Co, Ld	...	93, Clive Street	... ditto
1406	Skippers, J	...	Assistant Manager, Walter, Locke & Co, Ld.		4, Esplanade	... ditto
1407	Skipwith, A R	...	Assistant Manager, Brooke, Bond & Co., Ld.		5-1, Council House Street	... ditto
1408	Slator, E J	...	Assistant, Francis, Harrison, Hathaway & Co.		13, Government Place, East	ditto
1409	Small, Geo	...	Assistant, Graham & Co	...	9, Clive Street	... ditto
1410	Smallwood, C L	...	Partner, W Haworth & Co	...	1, Mission Row	... ditto
1411	Smallwood, E	...	Assistant, Landale and Morgan	...	5, Mission Row	... ditto
1412	Smart, A B	...	Extra Assistant Superintendent, Surveyor-General's Office, Drawing Department.		13, Wood Street	... ditto
1413	Smiles, J T	...	Assistant, Mackinnon, Mackenzie & Co.		16, Strand	... ditto
1414	Smith, A	...	Assistant, Dykes & Co	...	29, Waterloo Street	... ditto
1415	Smith, A E	...	Assistant, Macneill & Co	...	2, Clive Ghat Street	... ditto
1416	Smith, A J	...	Assistant, Whiteaway, Laidlaw & Co		4, 5 & 6, Chowringhee	... ditto
1417	Smith, A V	...	Stationery Store Examiner, Stamp and Stationery Office.		4 & 5, Church Lane	... ditto
1418	Smith, F	...	Assistant Superintendent, Office of the Calcutta Port Commissioners.		Strand Road	... ditto
1419	Smith, Fred. B	...	Principal, Calcutta Boys' School	...	72, Corporation Street	... ditto
1420	Smith, F B	...	Draper, Hall & Anderson	...	31, Chowringhee	... ditto
1421	Smith, F S	...	Draper, Hall & Anderson	...	31, Chowringhee	... ditto
1422	Smith, H E	...	Sub-Accountant, Chartered Bank of India, Australia & China.		5, Council House Street	... ditto
1423	Smith, H J T	...	Assistant Engineer, Calcutta Water-Works, Municipal Office.		5, Corporation Street	... ditto
1424	Smith, J	...	Assistant, Macneill & Co	...	2, Clive Ghat Street	... ditto

No.	Name	Style or Calling.	Residence or place of business	Religion.	Remarks.
	S				
1425	Smith, J B	... Assistant, Fraser & Co	... 4, Commercial Buildings	... Christian	
1426	Smith, L W	... Assistant, Mackinnon, Mackenzie & Co	16, Strand	... ditto	
**1427	Smith, M	... Clerk, Foreign Office	... Esplanade, West	... ditto	
1428	Smith, N	... Assistant, Standard Oil Co of New York.	8, Dalhousie Square, East	... ditto	
1429	Smith, R	... Assistant, Jessop & Co, Ld	... 93, Clive Street	... ditto	
1430	Smith, R N	... Assistant, Ahmuty & Co	... 6, Church Lane	... ditto	
1431	Smith, S B	... Assistant Accountant, Mercantile Bank of India, Ld.	28, Dalhousie Square	... ditto	
1432	Smith, T G	... Manager, Jhon Dewar & Sons, Ld	... 10, Hare Street	... ditto	
**1433	Smith, T M	... Clerk, Home Department	... Home Department	... ditto	
1434	Smith, William	... Managing Partner, Hamilton & Co...	8, Old Court House Street	... ditto	
1435	Smith, W R	... Assistant, Bird & Co	.. 101-1, Clive Street	... ditto	
1436	Smyth, E P	... Assistant, Atkinson Brothers, Ld	... 13, Chowringhee	... ditto	
1437	Smyth, R M W	... Assistant, Turner, Morrison & Co	... 6, Lyons Range	... ditto	
1438	Snaith, J F	... Assistant, Hamilton & Co	... 8, Old Court House Street	... ditto	
1439	Solomon, H E	... Partner, Hilali Brothers & Co	... 18, China Bazar Lane	... Jew	
1440	Solomon, J F	... Measurer, Licensed Measurers' Department, Bengal Chamber of Commerce.	2, Clive Street	... Christian	
1441	Solomon, M E	... Partner, Hilali Brothers & Co	... 18, China Bazar Lane	... Jew	
1442	Solomon, S E	... Ditto	... Ditto	... ditto	
1443	Somers, F K	... Stock Broker, Windram & Co	... 106, New China Bazar Street	Christian	
1444	Somerville, Percy	... Teacher, Calcutta Boys' School	... 72, Corporation Street	... ditto	
1445	Sowerby, W C	... Assistant, Turner, Morrison & Co	.. 6, Lyons Range	... ditto	

1446	Spalding, C L	...	Assistant Accountant, International Banking Corporation.	27, Dalhousie Square	...	ditto
1447	Spalding, W	...	Assistant, Whiteaway, Laidlaw & Co	4, 5 & 6, Chowringhee	...	ditto
1448	Spearing, R	...	Traveller, Lemon, Blake & Co ...	3-1, Wellesley Place	...	ditto
1449	Spencer, J G	...	Head Conductor, Office of the Agent for Government Consignments.	5, Strand Road	...	ditto
1450	Spooner, H B	...	Assistant, Cook & Co ..	Dhurrumtollah Street	...	ditto
1451	Stafford Jas	...	Assistant, A Milton & Co ...	156, Dhurrumtollah Street	...	ditto
1452	Stansbury, V	...	Assistant, J Mackillican & Co ...	7, Church Lane	...	ditto
1453	Staples, W	...	Assistant, Ralli Brothers ...	1 & 2, Church Lane	...	ditto
**1454	Stapleton, A	...	Superintendent, Foreign Office ...	Esplanade, West	...	ditto
**1455	Stark, J T R	...	2nd Class Clerk, Secretariat, Government of India, Public Works Department.	Imperial Secretariat Buildings		ditto
**1456	Stark, W E	...	Junior 1st Class Clerk, Lower Division, Office of Secretary to the Government of India, Military Department.	6, Esplanade, East	...	ditto
1457	Statham, I	...	Assistant, Great Eastern Hotel Co, Ld	1, 2 & 3, Old Court House Street.		ditto
1458	Stavride, C J	...	Assistant, Ralli Brothers ...	1 & 2, Church Lane	...	ditto
1459	Steadman, W	...	Assistant, Marshall Sons & Co, Ld	99, Clive Street	...	ditto
1460	Steenstrand, G	...	Assistant Secretary, Royal Insurance Co.	26-7, Dalhousie Square	...	ditto
1461	Stephen, S P	...	Assistant, Shaw, Wallace & Co ...	20, Strand Road	...	ditto
1462	Stephens, J	...	Assistant, Apcar & Co ...	19, Radha Bazar Street	...	ditto
1463	Sterling, E	...	Accountant, 1st grade, Military Accounts Department, Ordnance and Clothing Branches	Military Accounts Department Buildings, Koila Ghat Street.		ditto
1464	Steuart, C W	...	Measurer, Licensed Measurers' Department, Bengal Chamber of Commerce.	2, Clive Street	...	ditto
1465	Stevenson, H L	...	Assistant, J Thomas & Co ...	8, Mission Row	...	ditto
1466	Stevenson, W G	...	ditto ...	ditto	...	ditto

No.	Name.	Style or Calling.	Residence or place of business.	Religion.	Remarks.
	S				
1467	Stewart, A H	... Partner, Halford, Smith & Co	... 1, Mission Row	...	Christian
1468	Stewart, A M	... Manager, B Rigold & Bergmann	... 142, Radha Bazar Street	...	ditto
1469	Stewart, A P	... Assistant, Graham & Co	... 9, Clive Street	...	ditto
1470	Stewart, D M	... Assistant, Ranken & Co	... 4, Old Court House Street	...	ditto
1471	Stewart, F H	... Assistant, Gladstone, Wyllie & Co	... 101, Clive Street	...	ditto
1472	Stewart, J	... Assistant, Atkinson Brothers, Ld	... 13, Chowringhee	...	ditto
1473	Stewart, J C	... Assistant, Finlay, Muir & Co	... 1½ Clive Street	...	ditto
1474	Stewart, R	... Draper, Hall and Anderson	... 31, Chowringhee	...	ditto
1475	Stimson, W H	... Assistant, Whiteaway, Laidlaw & Co	4, 5 & 6, Chowringhee	...	ditto
1476	Stokes, A B	.. Teacher, La Martinière College	... 11, Loudon Street	...	ditto
1477	Stoner, C	... Assistant, G E Hotel Co, Ld	... 1, 2 & 3, Old Court House Street		ditto
1478	Stranack, F D	... Inspector of Branches, Commercial Bank of India, Ld.	5-1, Fairlie Place	...	ditto
1479	Stratton, J G	... Mechanic Typewriter, A P Stockwell & Co.	14-2, Sudder Street	...	ditto
1480	Street, H S	.. Assistant, F & C Osler	... 12, Old Court House Street...		ditto
1481	Stride, W	... Assistant, Harman & Co	... 12, Government Place	...	ditto
1482	Stuart, C H	... Assistant Accountant, Delhi and London Bank, Ld.	4, Council House Street	...	ditto
1483	Stuart, F	... Assistant, Turner, Morrison & Co	... 6, Lyons Range	...	ditto
1484	Stuart, H A	... Assistant, Francis, Harrison, Hathaway & Co.	13, Government Place, East		ditto
1485	Stuart, U	... Assistant Master, Doveton College	... 41, Free School Street	...	ditto
1486	Stuart, W	... Assistant, Mackenzie, Lyall & Co	... 2, Lyons Range	...	ditto
1487	Stubbs, H B	... Assistant, Depositors' Department, Bank of Bengal.	Strand	...	ditto
1488	Studwell, F	... Assistant, J B Norton & Sons	... 1 & 2, Old Court House Corner		ditto
1489	Sudlow, H	... Architect, Martin & Co.	... Jackson House	...	ditto
1490	Sullivan, T J	... Proprietor, James Sullivan & Co	... 5-1, Council House Street	...	ditto
1491	Sultana, W F	... Travelling Inspector of Accounts, Bengal Central Railway.	159, Bow Bazar Street	...	ditto

1492	Summers, A H	...	Assistant, Mackinnon, Mackenzie & Co.	16, Strand ...	ditto
1493	Sutton, R L	...	Assistant, Commercial Bank of India, Ld.	5-1, Fairlie Place ..	ditto
1494	Swan, G A	...	Assistant, Bengal Coal Co, Ld ...	5, Fairlie Place ...	ditto
1495	Swan, T S	...	Partner, King Brothers ...	102, Clive Street ...	ditto
1496	Swaries, J L	..	Assistant, Whiteaway, Laidlaw & Co.	4, 5 & 6, Chowringhee ...	ditto
1497	Swaris, A	...	Measurer, Licensed Measurers' Department, Bengal Chamber of Commerce.	2, Clive Street ...	ditto
1498	Swaris, E O	...	ditto	ditto ...	ditto
**1499	Syers, J D	...	Assistant, Office of Secretary to the Government of India, Legislative Department.	Legislative Department Office, 5, Esplanade, West.	ditto

T

1500	Talbot, J M	...	Proprietor, J M Talbot ...	2, Bentinck Street ...	ditto
1501	Tallack, C M	...	1st Assistant, Public Debt Office, Bank of Bengal.	Strand ...	ditto
**1502	Tanner, P A	...	1st Class Senior Clerk, Upper Division, Office of Secretary to the Government of India, Military Department.	6, Esplanade, East ...	ditto
1503	Tanner, W R	...	Assistant, Lovelock and Lewes ...	25, Mangoe Lane ...	ditto
1504	Tassie, J A	...	Assistant, Finlay Muir & Co ...	1, Clive Street ...	ditto
1505	Tatam, A C	...	Personal Assistant to Secretary, office of the Calcutta Port Commissioners.	Strand ...	ditto
1506	Tavares, D J	...	Assistant, Lawrence and Mayo ...	16, Old Court House Street ...	ditto
1507	Taylor, A H	...	Assistant, Office of Secretary to the Government of India, Finance and Commerce Department.	Treasury Buildings ...	ditto
1508	Taylor, A M	...	Assistant, Whiteaway, Laidlaw & Co	4, 5 & 6, Chowringhee ...	ditto
1509	Taylor, J	...	Assistant, Mackinnon, Mackenzie & Co	16, Strand ...	ditto
1510	Taylor, S H	...	Assistant, Allen Brothers & Co ...	1, New China Bazar Street ...	ditto
1511	Tayler, W H	...	Assistant, G E Hotel Co, Ld ...	1, 2 & 3, Old Court House Street.	ditto

No.	Names.	Style or Calling.	Residence or place of business.	Religion.	Remarks.
	T				
**1512	Teesdale, F E	... 5th Class Clerk, Secretariat, Government of India, P W D.	Imperial Secretariat Buildings	Christian	
**1513	Teeling, C O'H	... Clerk, Foreign Office ...	Esplanade, West ...	ditto	
1514	Temple, A	... Assistant, J B Norton & Sons ...	1 & 2, Old Court House Corner	ditto	
1515	Templeton, A E	.. Assistant Superintendent, Office of the Calcutta Port Commissioners.	Strand Road ...	ditto	
1516	Templeton, C W	... Assistant, British American Tobacco Co, Ld.	95, Clive Street ...	ditto	
1517	Templeton, E D	... Assistant, Ralli Brothers ..	1 & 2, Church Lane ...	ditto	
**1518	Ten-Broeke, J A	... 3rd Class Clerk, Secretariat, Government of India, P W D.	Imperial Secretariat Buildings	ditto	
1519	Tester, C	... Assistant, Francis, Harrison, Hathaway & Co.	13, Government Place, East...	ditto	
1520	Theobald, G O	... Chartered Accountant, Martin & Co	Jackson House ...	ditto	
1521	Thomaides, P J	... Assistant, Petrococchino Brothers ...	4, Clive Ghat Street ...	ditto	
1522	Thomas, A E	... Assistant Superintendent, Accountant-General's Office, Bengal.	The Treasury ...	ditto	
1523	Thomas, E F	... Assistant, Whiteaway, Laidlaw & Co	4, 5 & 6, Chowringhee ...	ditto	
1524	Thomas, F J	... Assistant, George Henderson & Co ...	100, Clive Street ...	ditto	
1525	Thomas, R G D	... Assistant, J Thomas & Co ...	8, Mission Row ...	ditto	
1526	Thomas, T E	... ditto ...	ditto ...	ditto	
1527	Thomas, W	... Assistant, H Clark & Co ...	5, Old Court House Street ...	ditto	
**1528	Thompson, G L	... Clerk, Foreign Office ...	Esplanade, West ...	ditto	
1529	Thompson, N	... Assistant, Steuart & Co ...	8, Old Court House Corner ...	ditto	
**1530	Thomson, A B E	... 6th Class Clerk, Office of Secretary to the Government of India, P W D.	Imperial Secretariat Buildings	ditto	
1531	Thomson, J	... Assistant, F W Heilgers & Co ...	136, Canning Street ...	ditto	
1532	Thomson, J	... Assistant, Whiteaway, Laidlaw & Co	4, 5 & 6, Chowringhee. ...	ditto	

1533	Thomson, W	...	Shed Officer, Office of the Calcutta Port Commissioners.	Strand Road ...	ditto
*1534	Thorpe, T	...	Assistant, Office of Secretary to the Government of India, Revenue and Agricultural Department, Forest Branch.	Imperial Secretariat Buildings	ditto
*1535	Threlfall, W A	...	Superintendent, Office of Secretary to the Government of India, Revenue and Agricultural Department, General Branch.	Imperial Secretariat Buildings	ditto
1536	Thurston, W J	...	Assistant, Meugens, King and Simson	102, Clive Street ...	ditto
1537	Tinson, Jno	...	Partner, J B Norton & Sons ...	1 & 2, Old Court House Corner.	ditto
1538	Tissendi, W S	...	Clerk, Foreign Office ...	Esplanade, West ...	ditto
1539	Tobias, A J	...	Superintendent of Printing and Records, Bank of Bengal.	Strand ...	ditto
1540	Todd, A E	...	Sub-Accountant, Chartered Bank of India, Australia and China.	5, Council House Street ...	ditto
1541	Tosh, A	...	Assistant, J Thomas & Co ...	8, Mission Row ...	ditto
1542	Totton, H J	...	Assistant, South British Fire and Marine Insurance Co.	1, Lall Bazar ...	ditto
1543	Traill, A M	...	Assistant, Bathgate & Co ...	19, Old Court House Street ...	ditto
1544	Traise, W J	...	Sub-Engineer, Office of Executive Engineer, 1st Calcutta Division.	Writers' Buildings ...	ditto
1545	Treglown, S	...	Assistant, Harman & Co ...	12, Government Place, East ...	ditto
1546	Treherne, F H	...	Manager, Grand Hotel ...	16, Chowringhee ...	ditto
1547	Tremble, H G	...	Assistant, G E Hotel Co, Ld ...	1, 2 & 3, Old Court House Street.	ditto
1548	Tringham, A	...	Assistant, Francis, Harrison, Hathaway & Co.	13, Government Place, East ...	ditto
1549	Tuck, A Newal	...	Partner, Ranken & Co ...	4, Old Court House Street ...	ditto
1550	Tulloch, W R	...	Clerk, Mathematical Instrument Department, Surveyor-General's Office.	15, Wood Street ...	ditto
1551	Turnage, F	...	Assistant, J B Norton & Sons ...	1 & 2, Old Court House Corner	ditto
1552	Turnbull, D R G	...	Sub-Engineer, Office of Executive Engineer, 1st Calcutta Division.	Writers' Buildings ...	ditto
1553	Turnbull, J	...	Assistant Accountant, Mercantile Bank of India, Ld.	28, Dalhousie Square ...	ditto

No	Names.	Style or Calling.	Residence or place of business.	Religion.	Remarks.
	T				
1554	Turner, A W	... Photo Engraver, Surveyor-General's Office.	14, Wood Street ...	Christian	
1555	Turner, J M	... Partner, Poppe, Delius & Co ...	15, Clive Row ...	ditto	
1556	Turton, G H	... Assistant, King Brothers ...	102, Clive Street ...	ditto	
1557	Tydeman, E R	... Assistant, Francis, Harrison, Hathaway & Co.	13, Government Place, East	ditto	
1558	Tyrer, S M	... Acting Manager, G Atherton & Co.	14, Clive Street ...	ditto	
	U				
1559	Urmson, W B	... Assistant, Kilburn & Co ...	4, Fairlie Place ...	ditto	
1560	Urquhart, D Mc N	... Jetty Superintendent, Office of the Calcutta Port Commissioners.	Strand Road ...	ditto	
1561	Urquhart, R D	... Warder, Calcutta Mint ...	47, Strand Road, North ...	ditto	
	V				
1562	Vallance, J E	... Accountant, Grindlay & Co ...	11, Hastings Street ...	ditto	
1563	Vallis, P W	... Assistant, Nicholson & Co ...	14, Old Court House Lane ...	ditto	
1564	Vandyke, F R	... Foreman, Litho Printer, Surveyor-General's Office.	14, Wood Street ...	ditto	
1565	Vanqulin, A H E	... Assistant, Bird & Co ...	101-1, Clive Street ...	ditto	
1566	Vardon, A	... Joint Railway Foreman, Office of the Calcutta Port Commissioners.	Strand Road ...	ditto	
1567	Vaughan, H C	... Engineer, Martin & Co ...	Jackson House ...	ditto	
1568	Vaz, F A	... Manager, A Vaz & Co ...	20, Metcalfe Street ...	ditto	
1569	Veare, H	... Assistant, Cook & Co ...	182, Dhurrumtollah ...	ditto	
1570	Vernieux, D S	... Clerk, Store Department, E I R ...	E I R House ...	ditto	
1571	Vernon, J	... Assistant, Army and Navy Co-Operative Society, Ld.	41, Chowringhee ...	ditto	
1572	Vick, A W	... Sub-Accountant, Chartered Bank of India, Australia and China.	5, Council House Street ...	ditto	
1573	Vickers, E	... Electric Engineer, Walter, Locke & Co., Ld.	4, Esplanade ...	ditto	
1574	Vieux, T A	... Engraver, Engraving Department, Surveyor-General's Office.	13, Wood Street ...	ditto	
1575	Vieux, J	... Assistant Litho Printer, Surveyor-General's Office.	14, Wood Street ...	ditto	
1576	Villani, F C	... Assistant, Lawrence & Mayo ...	16, Old Court House Street ...	ditto	

1577	Vinay, Alex	...	Assistant, Ullmann, Hirschhorn & Co	14, Radha Bazar Lane	...	ditto
1578	Viney E W	...	Assistant, Meugens, King & Simson	102, Clive Street	...	ditto
1579	Vincent, S B	...	Clerk, Home Department ...	Home Department	...	ditto
1580	Voice, T A	...	Assistant, Branch Department, Bank of Bengal.	Strand	...	ditto
1581	Voss, A E	...	Drafting Assistant, Calcutta Municipal Corporation.	Municipal Office	...	ditto
1582	Vyse, John C W	...	Teacher, Calcutta Boys' School ..	72, Corporation Street	...	ditto
1583	Wachsel, H	...	Assistant, G F Kellner & Co ...	32, Chowringhee	...	ditto
1584	Waddle, J	...	Assistant, G E Hotel Co, Ld ...	1, 2 & 3, Old Court House Street.		ditto
1585	Waghorn, W J	...	Architectural Assistant, Chief Engineer's Office, E I R.	E I R House	...	ditto
1586	Wakefield, S B	...	Assistant, Thacker, Spink & Co ...	5, Government Place	...	ditto
1587	Wakefield, T A	...	Assistant, Whiteaway, Laidlaw & Co	4, 5 & 6, Chowringhee	...	ditto
1588	Walker, A W	...	Assistant, Bathgate & Co ...	19, Old Court House Street	...	ditto
1589	Walker, C	...	Assistant, Martin & Co ...	Jackson House	...	ditto
1590	Walker, E	...	Foundry Foreman, Office of Superintendent, Government Printing, India.	166, Dhurrumtollah Street	...	ditto
1591	Walker, G C	...	Head Clerk, Surveyor-General's Office, Correspondence Branch.	13, Wood Street	...	ditto
1592	Walker, H	...	Electric Engineer, Walter, Locke & Co, Ld.	4, Esplanade	...	ditto
1593	Wall, W W	...	2nd Assistant, Litho Branch, Surveyor-General's Office.	14, Wood Street	...	ditto
1594	Wallace, A.	...	Deputy Superintendent, Office of Consulting Engineer to the Government of India for Railways.	E I R House	...	ditto
1595	Wallace, E	...	Assistant, Hoare, Miller & Co ...	38, Strand	...	ditto
1596	Wallace, Gordon	...	Assistant, Landale & Clark ...	12, Clive Row	...	ditto
1597	Wallace, G D	...	Assistant, Graham & Co ...	9, Clive Street	...	ditto
1598	Waller, L G	...	Assistant, W S Cresswell & Co ...	10, Hare Street	...	ditto
1599	Walling, C O	...	Assistant, D T Keymer & Co ...	1-1, Council House Street	...	ditto
1600	Walsh, C P	...	Assistant, Walker, Goward & Co ...	32, Jackson's Ghat Street	...	ditto
1601	Walsh, J	...	Manager, Ullmann, Hirschhorn & Co	14, Radha Bazar Lane	...	ditto

No.	Names.	Style or Calling	Residence or place of business.	Religion.	Remarks.
	W				
1602	Walsh, T N	... Assistant, Martin & Co	Jackson House ...	Christian	
1603	Walters, E B	... Clerk, Office of Pay Examiner, Military Accounts Department, E C.	3, Koila Ghat Street ...	ditto	
1604	Ward, A H	... Superintendent, Gowkhana, District No. I, Calcutta Corporation.	Grey Street ...	ditto	
1605	Ware, F H	... Assistant, Gillanders, Arbuthnot & Co	8, Clive Street ...	ditto	
1606	Warmington, H W	... Office Superintendent, Office of Consulting Engineer to the Government of India for Railways.	E I R House ...	ditto	
1607	Warwick, J B	... Assistant, Mackenzie, Lyall & Co ...	2, Lyons Range ...	ditto	
1608	Watling, J B	... Head Assistant, Bengal Legislative Department.	Writers' Buildings ...	ditto	
1609	Watson, E	... Local Manager, James Nourse, Ld ...	5, Commercial Buildings ...	ditto	
1610	Watson, E A	... Assistant, McLeod & Co ..	31, Dalhousie Square ...	ditto	
1611	Watson, F L	... Partner, H Clark & Co ...	5, Old Court House Street ...	ditto	
1612	Watson, G	... Assistant, Gillanders, Arbuthnot & Co	8, Clive Street ...	ditto	
1613	Watson, J D	... Assistant Master, Doveton College ...	41, Free School Street ...	ditto	
1614	Watson, N A R	... Assistant, Jessop & Co, Ld ...	93, Clive Street ...	ditto	
1615	Watts, F G	... Assistant, F and C Osler ...	12, Old Court House Street ...	ditto	
1616	Wayles, W	... Assistant, Barlow & Co ...	37, Strand ...	ditto	
1617	Webb, C	... Assistant, Davenport & Co ...	101-1, Clive Street ...	ditto	
1618	Webb, G H	... Firm of J Boseck & Co ..	7, Wellesley Place ...	ditto	
1619	Webb, T L	... Partner, Harnack & Co ...	10 & 10-1, Old Court House Street.	ditto	
1620	Webb, W H	... Assistant, Turner, Morrison & Co ...	6, Lyons Range ...	ditto	
1621	Webster, H M	... Assistant, Becker, Gray & Co ...	7, Hastings Street ...	ditto	
1622	Webster, Norman	... Assistant, Bird & Co ...	101-1, Clive Street ...	ditto	
1623	Weir, A T S	... Clerk, Foreign Office ...	Esplanade, West ...	ditto	
1624	Wells, W G	... District Building Surveyor, District No. IV.	Municipal Office ...	ditto	
1625	Westerhout, A B	... Assistant, Anderson, Wright & Co ...	22, Strand ...	ditto	

1626	Wheeler, T H	...	Assistant, Andrew, Yule & Co	...	7, Clive Row	...	ditto
1627	Wheldon, J W	...	Assistant, Great Eastern Hotel Co, Ld		1, 2 & 3, Old Court House Street.		ditto
1628	Whitby, H B	...	Assistant, Kilburn & Co	...	4, Fairlie Place	...	ditto
**1629	White, A H	...	Junior 5th Class Clerk, Lower Division, Office of Secretary to the Government of India, Military Department.		6, Esplanade, East	...	ditto
1630	White, B A	...	Assistant, Bird & Co	...	101-1, Clive Street	...	ditto
1631	White, C H	...	Assistant, Government Medical Store Department, B C.		8, Wellesley Place	...	ditto
1632	White, T A	...	Controller of Stores, E I R	...	E I R House	...	ditto
1633	Whittmore, W	...	Assistant, Cook & Co	...	182 and 183, Dhurrumtollah Street.		ditto
1634	Whyte, A N	...	Assistant, Gladstone, Wyllie & Co	...	101, Clive Street	...	ditto
1635	Whyte, E	...	Assistant, Bathgate & Co	...	19, Old Court House Street	...	ditto
1636	Whyte, J	...	4th grade Accountant, Office of Examiner, Public Works Accounts, Bengal.		8, Lyons Range	...	ditto
1637	Wickham, W G	...	Assistant, Gillanders, Arbuthnot & Co		8, Clive Street	...	ditto
1638	Wighton, A	...	Assistant, Thomas, Duff & Co, Ld	...	15, Clive Row	...	ditto
1639	Wild, C A	....	Assistant, Anderson, Wright & Co	...	22, Strand Road	...	ditto
1640	Williams, H	...	Assistant, Heatly and Gresham, Ld		6, Waterloo Street	...	ditto
1641	Williams, L	...	Assistant, Government Medical Store Department, B C.		8, Wellesley Place	...	ditto
1642	Williams, P	...	Extra Assistant Superintendent, Surveyor-General's Office, Drawing Department.		13, Wood Street	...	ditto
1643	Williams, S C	...	Deputy Secretary to Agent, E I R	...	E I R House	...	ditto
1644	Williamson, C J	...	Assistant, Thacker, Spink & Co	...	5, Government Place	...	ditto

No.	Names.	Style or Calling.	Residence or place of business.	Religion.	Remarks
	W				
1645	Williamson, O E	... Assistant, Balmer, Lawrie & Co ...	103, Clive Street ...	Christian	
1646	Willis, Ed'A	... Assistant, Poppe, Delius & Co ...	15, Clive Row ...	ditto	
1647	Willis, W H	... Assistant, A P Stockwell & Co ...	2, Pollock Street ...	ditto	
1648	Wills, D A	... Assistant, F W Heilgers & Co ...	136, Canning Street ...	ditto	
1649	Wills, G R	... Assistant, Williamson, Magor & Co	4, Mangoe Lane ...	ditto	
1650	Wilson, A C	... Junior 5th class Clerk, Lower Division, Office of Secretary to the Government of India, Military Department.	6, Esplanade, East ...	ditto	
1651	Wilson, D R	... Measurer, Licensed Measurers' Department, Bengal Chamber of Commerce.	2, Clive Street ...	ditto	
1652	Wilson, G E	... Assistant, Office of Private Secretary to the Viceroy.	6, Council House Street ...	ditto	
1653	Wilson, H F	... Assistant, Shaw, Wallace & Co ...	20, Strand Road ...	ditto	
1654	Wilson, J	... Assistant, Begg, Dunlop & Co ...	12, Mission Row ...	ditto	
1655	Wilson, J B	... Personal Assistant to T M, Office of the Calcutta Port Commissioners.	Strand Road ...	ditto	
1656	Wilson S	... Firm of S Wilson & Co ...	10A, Hare Street ...	ditto	
1657	Wilson, T C	... Assistant, Bank of Calcutta, Ld. ...	7, Clive Row ...	ditto	
*.*1658	Wilsone, A H	... 5th class Senior Clerk, Upper Division, Office of Secretary to the Government of India, Military Department.	6, Esplanade, East ...	ditto	
1659	Wince, W G	... Personal Assistant to Health Officer, Municipal Office.	Municipal Office ...	ditto	
1660	Wingrove, A C	... Manager, G F Playfair & Co ...	6, Old Post Office Street ...	ditto	
1661	Winkfield, R E	... 2nd Engineer, Calcutta Electric Supply Corporation, Ld.	4, Fairlie Place ...	ditto	
*.*1662	Winn, G F	... Superintendent, Home Department ...	Home Department ...	ditto	
1663	Wittet, R	... Assistant, Mackintosh, Burn & Co ...	8, Esplanade, East ...	ditto	
1664	Wollen, C	... Assistant, Great Eastern Hotel Co, Ld.	1, 2 and 3, Old Court House Street.	ditto	

1665	Wood, J M	...	Assistant, Mackintosh, Burn & Co		8, Esplanade, East	...	ditto
1666	Wood, T D	...	Assistant, Begg, Dunlop & Co	...	12, Mission Row	...	ditto
*1667	Wood, W S	...	6th class Clerk, Secretariat, Government of India, P W D.		Imperial Secretariat Buildings		ditto
1668	Woodhead, H	...	Assistant, Dykes & Co	...	29, Waterloo Street	...	ditto
1669	Woods, J	...	Assistant, Ranken & Co	...	4, Old Court House Street	..	ditto
1670	Woods, J	...	Assistant, Davis, Leech & Co	...	11, Government Place	...	ditto
1671	Woods, R M	...	Assistant, J A Dykes & Co	...	102, Clive Street	...	ditto
1672	Woodward, H	...	Assistant, W Newman & Co	...	4, Dalhousie Square	...	ditto
1673	Wordsworth, H	...	Assistant, Ernsthausen, Ld	...	9, Clive Row	...	ditto
1674	Wordsworth, H H.	...	Assistant, Bird & Co	...	101-1, Clive Street	...	ditto
1675	Wright, A	...	Assistant, Harold & Co	...	2, Dalhousie Square	...	ditto
1676	Wright, A S	...	Assistant, Traill & Co	...	20, British Indian Street	...	ditto
1677	Wright, F A	...	Deputy Chief Engineer, E I R	...	E I R House	...	ditto
1678	Wright, W R	...	Assistant, Turner, Morrison & Co	...	6, Lyons Range	...	ditto
	Y						
1679	Yakchee, A	...	Assistant, Board of Revenue, L P	..	2, Bankshall Street	...	ditto
1680	Yakchee, L R	...	Head Assistant to Jetty Supdt., Office of the Calcutta Port Commissioners.		Strand Road	...	ditto
1681	Yapp, G F	...	Assistant, John Dickinson & Co, Ld		7, New China Bazar Street	...	ditto
1682	Yelland, F W	...	Assistant, T E Thomson & Co, Ld	...	9, Esplanade, East	...	ditto
1683	Yeoman, C L	...	Assistant, Gillanders, Arbuthnot & Co		8, Clive Street	...	ditto
1684	Youd, S	...	Assistant, Youd & Co	...	7-2, Wellesley Place	...	ditto
*1685	Young, D J	...	Assistant, Bengal Secretariat, Judicial, Political and Appointment Departments.		Writers' Buildings	...	ditto
1686	Young, J J B	...	Assistant, Barry & Co	...	5, Lyons Range	...	ditto
1687	Young, R	...	Assistant, Andrew, Yule & Co	...	7, Clive Row	...	ditto

No.	Names.	Style or Calling.	Residence or place of business.	Religion.	Remarks.
	Y				
1688	Youngson, D	... Assistant, Macneill & Co	... 2, Clive Ghat Street	...	Christian
1689	Yule, W R	... Assistant, Jardine, Skinner & Co	... 4, Clive Row	...	ditto
	Z				
1690	Zemin, J S	... Principal, Doveton College	... 41, Free School Street	...	ditto
1691	Zimmermann, E	... Assistant, Anderson, Wright & Co	... 22, Strand	...	ditto
	A				
1692	Abbad Abul Makarem	... Assistant, Office of Private Secretary to the Viceroy.	6, Council House Street	...	Muhammadan
1693	Abdul, Karim Khan	... Accountant, Office of Government Examiner of Railway Accounts, E I R.	E I R House	...	ditto
1694	Abdur Razak, Munshi	... Draftsman, Surveyor-General's Office, Drawing Department.	13, Wood Street	...	ditto
1695	Acharya, Hari Pado	... Inspector, Collector's Department	... Municipal Office	...	Hindu
1696	Acharya, Tiruvenkut K	... Superintendent, Accountant-General's Office, Bengal.	The Treasury	...	ditto
1697	Addy, Asutosh	... Partner, Oriental Type Foundry	... 16, Lower Chitpur Road	...	ditto
1698	Addy, Bonomally	... Assistant, George Henderson & Co	... 100, Clive Street	...	ditto
1699	Addy, Gosta Behary	... Assistant, Office of Superintending Engineer, P W D, Bengal, South-Western Circle.	Writers' Buildings	...	ditto
1700	Addy, Grindra Nath	... Partner, Oriental Type Foundry	... 16, Lower Chitpur Road	...	ditto
1701	Addy, Khetter Nath	... Clerk, Gillanders, Arbuthnot & Co	... 8, Clive Street	...	ditto
1702	Addy, P N	... Assistant, Board of Revenue, L P	... 2, Bankshall Street	...	Christian
1703	Aditya, Satyendra Nath	... Accountant, Office of Pay Examiner, Military Accounts Department, E C.	3, Koila Ghat Street	...	Hindu
1704	Ahmad, Istesam Rasul	... Assistant, Board of Revenue, L P	... 2, Bankshall Street	...	Muhammadan
1705	Ahmad, Munshi Masih-ud-din.	Assistant, Office of Secretary to the Government of India, Legislative Department.	Legislative Department Office, 5, Esplanade, West.		ditto
1706	Ahmad, Maulvi Sayed-ud-din.	Assistant, Office of Secretary to the Government of India, Legislative Department.	Legislative Department Office, 5, Esplanade, West.		ditto
1707	Aich, Jogendra Chandra	... Assistant Engineer, Suburban Survey	4, Corporation Street	...	Hindu

1708	Askari, Maulvi Mohamed ...	Assistant, Office of Secretary to the Government of India, Legislative Department.	Legislative Department Office, 5, Esplanade, West.	Muhammadan
1709	Ash, Mutty Lall ...	Superintendent, Calcutta Waterworks.	5, Corporation Street ...	Hindu
	B			
1710	Bagchi, Debendra Nath ...	Sub-Assistant Auditor, E I R ...	E I R House ...	ditto
1711	Bagchi, Kartick Chunder ...	Assistant, George Henderson & Co ...	100, Clive Street ...	ditto
1712	Bagchi, Kristo Lal ...	License Inspector ...	Municipal Office ...	ditto
*1713	Bajpayee, Mukta Prasad ...	7th class Clerk, Secretariat, Government of India, P W D.	Imperial Secretariat Buildings	ditto
*1714	Balak Nath ...	5th class Clerk, Secretariat, Government of India, Public Works Department.	Imperial Secretariat Buildings	ditto
1715	Banerjee, A. C. ...	2nd Clerk, Port Office ...	15-1, Strand Road ...	ditto
1716	Banerjee, A D ...	Assistant, Mackinnon, Mackenzie & Co	16, Strand ...	Christian
1717	Banerjee, Aghor Nath, M.A.	Assistant to Director of Public Instruction, Bengal.	Writers' Buildings ...	Hindu
1718	Banerjee, Akhoy Kumar ...	Cashier, Office of Examiner, Public Works Accounts, Bengal.	8, Lyons Range ...	ditto
1719	Banerjee, Apar Nath ...	Clerk, Jessop & Co, Ld ...	93, Clive Street ...	ditto
1720	Banerjee, Arun Chunder ...	Assistant, Financial Department, Bengal Secretariat.	Writers' Buildings ...	ditto
1721	Banerjee, Ashootosh ...	Superintendent, Accountant-General's Office, Bengal.	The Treasury ...	ditto
*1722	Banerjee, Atul Krishna ...	3rd class Assistant, Office of Accountant-General, Military Department.	6, Esplanade Row, East ...	ditto
1723	Banerjee, Aunnoda Prosad	Clerk, Audit Department, E I R ...	E I R House ...	ditto
1724	Banerjee, Bacharam ...	Draftsman, Surveyor General's Office, Drawing Department.	13, Wood Street ...	ditto
1725	Banerjee, Basanta Kumar ...	Clerk, Comptroller-General's Office...	The Treasury ...	ditto
1726	Banerjee, Behary Lall ...	Clerk, Office of Pay Examiner, Military Accounts Department, E C.	3, Koila Ghat Street ...	ditto
1727	Banerjee, Bepin Behary ...	Assistant, Bengal Secretariat, Financial Department.	Writers' Buildings ...	ditto

No.	Names.	Style or Calling.	Residence or place of business.	Religion.	Remarks.
	B				
1728.	Banerjee, Bepin Behary ...	Assistant, Office of Secretary to the Government of India, Finance and Commerce Department.	Treasury Buildings ...	Hindu	
**1729	Banerjee, Bepin Behary ...	6th class Clerk, Office of Secretary to the Government of India, P W D.	Imperial Secretariat Buildings	ditto	
1730	Banerjee, Bhola Nath ...	Accountant, Audit Office, E I R ...	E I R House ...	ditto	
1731	Banerjee, Bhoopoty Churn...	Assistant, Office of Examiner of Ordnance and Army Clothing Branches.	Military Accounts Department Buildings, Koila Ghat Street.	ditto	
**1732	Banerjee, Bhudeb ...	Clerk, Office of Accountant-General, P W D.	Imperial Secretariat Buildings	ditto	
**1733	Banerjee, Bijoy Kissen ...	Junior 1st class Clerk, Lower Division, Office of Secretary to the Government of India, Military Department.	6, Esplanade, East ...	ditto	
**1734	Banerjee, Biseo Behary ...	7th class Clerk, Secretariat, Government of India, Public Works Department.	Imperial Secretariat Buildings	ditto	
1735	Banerjee, Bunkim Chunder	Assistant, Office of Examiner of Ordnance and Army Clothing Branches.	Military Accounts Department Buildings, Koila Ghat Street.	ditto	
1736	Banerjee, Bunko Behary ...	Inhabitant ...	81, Baranussee Ghose's Street	ditto	
1737	Banerjee, Chunder Kumar ...	Assessor, Income-tax ...	3, Charnock Place ...	ditto	
1738	Banerjee, Chunder Nath ...	Assistant, Office of Secretary to the Government of India, Finance and Commerce Department.	Treasury Buildings ...	ditto	
1739	Banerjee, Denonath ...	Accountant, Pelican and British Empire Life Office.	12, Dalhousie Square ...	ditto	
1740	Banerjee, Devendro Nath ..	1st Assistant to Librarian, Bengal Library.	Writers' Buildings ...	ditto	
1741	Banerjee, Devendro Nath ...	Assistant, Office of Examiner of Ordnance and Army Clothing Branches.	Military Accounts Department Buildings, Koila Ghat Street.	ditto	
1742	Banerjee, Doorga Churn ...	Assistant, Mackinnon, Mackenzie & Co	16, Strand ...	ditto	
1743	Banerjee, Gopal Chunder ...	Assistant, Grossmann & Co ...	2, Fairlie Place ...	ditto	

1744	Banerjee, Gopal Chunder ...	Accountant, Office of Controller of Military Accounts, E C, Accounts Branch.	3, Koila Ghat Street	...	ditto
1745	Banerjee, Gunamani ...	Assistant Superintendent, Accountant-General's Office, Bengal.	The Treasury	...	ditto
1746	Banerjee, Hara Kumar ...	Hackney Carriage Inspector, Calcutta Corporation.	Municipal Office	..	ditto
1747	Banerjee, Hara Lal ...	Clerk, Comptroller-General's Office ...	The Treasury	...	ditto
**1748	Banerjee, Haridas ...	Assistant, Bengal Office, Judicial, Political and Appointment Departments.	Writers' Buildings	...	ditto
1749	Banerjee, Haridas, M A. ...	Head Assistant to the Director of Public Instruction, Bengal.	Writers' Buildings	...	ditto
1750	Banerjee, Hem Chandra ...	Traffic Canvasser, B C R ...	159-1, Bow Bazar Street	...	ditto
1751	Banerjee, Hem Chunder ...	Assistant, Office of Inspector-General of Civil Hospitals and Sanitary Commissioner for Bengal.	Writers' Buildings	...	ditto
1752	Banerjee, Jadoo Nath ...	Assistant, Octavius Steel & Co ...	14, Old Court House Street	...	ditto
1753	Banerjee, Jogendra Nath ...	Cashier, Martin & Co ...	Jackson House	...	ditto
1754	Banerjee, Jogendra Nath ...	Assistant, Mackinnon, Mackenzie & Co	16, Strand	...	ditto
1755	Banerjee, Kalidas ...	Assistant, R B Rodda & Co ...	2, Wellesley Place	...	ditto
**1756	Banerjee, Kalidas ...	Jr. 4th class Clerk, Lower Division, Office of Secretary to the Government of India, Military Department.	6, Esplanade, East	...	ditto
1757	Banerjee, Kaliprasana ...	Accountant, Office of Executive Engineer, 1st Calcutta Division.	Writers' Buildings	...	ditto
1758	Banerjee, Kartic Chunder...	Assistant, Mackinnon, Mackenzie & Co	16, Strand	...	ditto
1759	Banerjee, Kala Chand ...	Cashier, R Scott Thomson & Co, Ld	15, Government Place, East	...	ditto
1760	Banerjee, Kedar Nath ...	Assistant, Apcar & Co ...	19, Radha Bazar	...	ditto
1761	Banerjee, Kedar Nath ...	Partner, Kedar Nath Banerjee & Co	82, Clive Street	...	ditto
1762	Banerjee, Khetter Mohan...	1st class Assistant, Office of Controller of Military Accounts, E C, Supply and Transport Branch.	3, Koila Ghat Street	...	ditto
1763	Banerjee, Khetter Mohun...	Assistant, General and Revenue Departments, Bengal Secretariat.	Writers' Buildings	...	ditto

No.	Names.	Style or Calling.	Residence or place of business.	Religion.	Remarks.
	B				
1764	Banerjee, Khetter Mohan ..	Clerk, Comptroller-General's Office ...	The Treasury ...	Hindu	
1765	Banerjee, Khetter Nath ...	Clerk, Chief Engineer's Office, E I R	E I R House ...	ditto	
1766	Banerjee, Kissori Mohun ...	Assistant, Mackinnon, Mackenzie & Co	16, Strand ...	ditto	
1767	Banerjee, Kshetra Mohan, M.A.	Professor, Ripon College ...	60, Mirzapore Street ...	ditto	
1768	Banerjee, Kshetra Mohon ...	Assistant Master, Hare School ...	College Square ...	ditto	
1769	Banerjee, Lalit Kumar ...	Professor, Bangabashi College ...	Bowbazar ...	ditto	
1770	Banerjee, Mohendra Nath	Assistant, Bengal Secretariat, Financial Department.	Writers' Buildings ...	ditto	
1771	Banerjee, Monindra Nath ...	Assistant, Kedar Nath Banerjee & Co	82, Clive Street ...	ditto	
1772	Banerjee, Monmohun ..	Clerk, National Bank of India, Ld ...	104, Clive Street ...	ditto	
1773	Banerjee, Murulidhar, M A.	Professor, Sanskrit College ...	College Square ...	ditto	
1774	Banerjee, Naudo Lal ...	Assistant, Turner, Morrison & Co ...	6, Lyons Range ...	ditto	
1775	Banerjee, Narayan Chunder	Stationery-keeper, Office of Superintendent, Government Printing, India.	8, Hastings Street ...	ditto	
1776	Banerjee, Narendra Nath ...	Assistant, Bengal Secretariat, Financial Department.	Writers' Buildings ...	ditto	
1777	Banerjee, Nil Kanto ...	Head Clerk, Military Works, Office of Commanding Royal Engineer, Presidency District.	Fort William ...	ditto	
1778	Banerjee, Nilmony ...	Clerk, Audit Branch, G T M's Office, E I R.	E I R House ...	ditto	
1779	Banerjee, Nirmal Chandra, M.A.	1st Assistant to Registrar, Calcutta University.	Senate House ...	Christian	
1780	Banerjee, Nivaran Chunder	Cashier, North British and Mercantile Insurance Office.	100, Clive Street ...	Hindu	
1781	Banerjee, Nogendra Nath ..	Accountant, Office of Government Examiner of Railway Accounts, P W D.	B C R House ...	ditto	
1782	Banerjee, Probodh Chunder	Assistant, Moran & Co ...	3, Mangoe Lane ...	ditto	

*.*1783	Banerjee, P N ...	Assistant, Office of Secretary to the Government of India, Revenue and Agricultural Department, Agriculture Branch.	Imperial Secretariat Buildings		ditto
1784	Banerjee, Ram Chunder ...	Clerk, North British & Mercantile Insurance Office.	100, Clive Street	...	ditto
1785	Banerjee, Sarat Chunder ...	Assistant, Office of Inspector-General of Police, L P.	Writers' Buildings	...	ditto
1786	Banerjee, Sarat Chunder ...	Clerk, Comptroller-General's Office...	The Treasury	...	ditto
1787	Banerjee, Sashadhar ...	Assistant, Army and Navy Co-Operative Society, Ld.	41, Chowringhee	...	ditto
1788	Banerjee, Satya Sharan ...	Clerk, Office of Pay Examiner, Military Accounts Department, E C.	3, Koila Ghat Street	...	ditto
1789	Banerjee, Satyendra Nath...	Clerk, Office of Pay Examiner, Military Accounts Department, E C.	3, Koila Ghat Street	...	ditto
1790	Banerjee, Seetal Chandra ...	Proprietor, Standard Press ...	81 and 84, Radha Bazar Street		ditto
*.*1791	Banerjee, Shangsar Chunder	Accountant, Accountant-General's Office, P W D.	Imperial Secretariat Buildings		ditto
1792	Banerjee, Shoorendra Chunder.	1st Assistant, Legal Remembrancer's Office.	High Court	...	ditto
1793	Banerjee, Soshi Bhusan ...	Clerk, Audit Office, E I R ...	E I R House	...	ditto
1794	Banerjee, Surendra Nath ...	Professor, Metropolitan Institution ...	Sunker Ghose's Lane, Bar Simla.		ditto
*.*1795	Banerjee, Tincowry, B.L. ...	Assistant, Bengal Office, Judicial, Political and Appointment Departments.	Writers' Buildings	...	ditto
1796	Banerjee, Troylooko Nath	Assistant, Graham & Co ...	9, Clive Street	...	ditto
1797	Banerjee, Umbica Churn ...	Clerk, Office of Government Examiner of Railway Accounts, Public Works Department.	E I R House	...	ditto
1798	Banerjee, Upendro Chunder	Superintendent, Comptroller-General's Office.	The Treasury	...	ditto
1799	Banerjee, Upendro Lal ...	Superintendent, Accountant-General's Office, Bengal.	The Treasury	...	ditto

No.	Names.	Style or Calling.	Residence or place of business.	Religion.	Remarks.
	B				
1800	Banerjee, Upendro Nath ...	Clerk, G F Kellner & Co ...	32, Chowringhee ...	Hindu	
**1801	Barman, Lakshminarayan...	1st class Senior Clerk, Upper Division, Office of Secretary to the Government of India, Military Department.	6, Esplanade, East ...	ditto	
**1802	Bhadoory, Hira Lall ...	Accountant, Accountant-General's Office, Public Works Department.	Imperial Secretariat Buildings	ditto	
1803	Bhadoory, Nirmal Chunder	Accountant, Office of Government Examiner of Railway Accounts, Public Works Department.	E I R House ...	ditto	
1804	Bhandary, K N ...	Drafting Assistant, Calcutta Municipal Corporation.	Municipal Office ...	ditto	
1805	Bhonjo, Nobin Chunder ...	Inhabitant ...	Rugoonath Chatterjee's Street, Bar Simla.	ditto	
1806	Bhur, Girish Chunder ...	Assistant, Barry & Co ...	5, Lyons Range ...	ditto	
1807	Bhur, Okhoy Kumar ...	Assistant, Bathgate & Co ...	19, Old Court House Street ...	ditto	
1808	Bhuttacharjee, Brojo Kishore	Assistant, Office of Inspector-General of Police, L P.	Writers' Buildings ...	ditto	
**1809	Bhuttacharjee, Haridass ...	Clerk, Office of Accountant-General, Public Works Department.	Imperial Secretariat Buildings	ditto	
1810	Bhuttacharjee, Hem Chunder	Inspector, Suburban Drainage Department, Municipal Office.	4, Corporation Street ...	ditto	
1811	Bhuttacharjee, Hemadrish Chunder.	Accountant, 4th grade, Office of Examiner, Public Works Accounts, Bengal.	8, Lyons Range ...	ditto	
1812	Bhuttacharjee, Jadu Nath	Head Assistant, Office of Inspector-General of Prisons, Bengal.	Writers' Buildings ...	ditto	
1813	Bhuttacharjee, Jnanesh Ch.	Assistant Engineer, Office of Executive Engineer, 2nd Calcutta Division.	Writers' Buildings ..	ditto	
1814	Bhuttacharjee, Kali Krishna	Professor, Metropolitan Institution	Sunker Ghose's Lane, Bar Simla.	ditto	
1815	Bhuttacharjee, Kshettra Nath	Clerk, Comptroller-General's Office...	The Treasury ...	ditto	

1816	Bhuttacharjee, Mohendra Nath.	Assistant, Office of Inspector-General of Civil Hospitals, and Sanitary Commissioner, Bengal.	Writers' Buildings ...		ditto
1817	Bhuttacharjee, Probodh Chunder.	3rd class Assistant, Office of Controller of Military Accounts E C, Supply and Transport Branch.	8, Koila Ghat Street ...		ditto
1818	Bhuttacharjee, Probodh Chunder.	Foreman, Office of Superintendent, Government Printing, India.	8, Hastings Street ...		ditto
1819	Bhuttacharjee, Rajani Kanta	Assistant Assessor, Municipal Office	Municipal Office ...		ditto
1820	Bhuttacharjee, Rajendro Nath.	Head Clerk, Ripon College ...	60, Mirzapore Street ...		ditto
1821	Bhuttacharjee, Ram Chunder.	Assistant Superintendent, Accountant-General's Office, Bengal.	The Treasury ...		ditto
1822	Bhuttacharjee, Ram Das (Rai Bahadur).	Honorary Assistant Engineer, Office of Executive Engineer, 1st Calcutta Division.	Writers' Buildings ...		ditto
1823	Bhuttacharjee, Ram Jadu ...	Assistant, Board of Revenue, L P ...	2, Bankshall Street ...		ditto
1824	Bhuttacharjee, Sarat Kumar	License Inspector ...	Municipal Office ...		ditto
1825	Bhuttacharjee, Sham Lall	Stationery Ledger-keeper and Chief Accountant, Stamp and Stationery Office.	4 and 5, Church Lane ...		ditto
**1826	Bhuttacharjee, Surendra Nath.	Junior 5th Class Clerk, Lower Division, Office of Secretary to the Government of India, Military Department.	6, Esplanade, East ...		ditto
1827	Bhuttacharjee, Upendra Narayan.	Municipal Head Clerk, Presidency Commissioner's Office.	3, Charnock Place ...		ditto
1828	Bhuttacharjee, Upendra Nath.	Estimator, Office of Superintending Engineer, Central Circle.	Writers' Buildings ...		ditto
**1829	Biswas, A C ...	Assistant, Office of Secretary to the Government of India, Revenue and Agricultural Department, Forest Branch.	Imperial Secretariat Buildings		ditto
**1830	Biswas, Atul Krishna ...	Clerk, Home Department ...	Home Department ...		Brahmo
1831	Biswas, Bhupati Nath ...	Cashier, Commercial Bank of India, Ld.	5-1, Fairlie Place ...		Hindu

No.	Names.	Style or Calling.	Residence or place of business.	Religion.	Remarks.
	B				
1832	Biswas, Chunder Kanto ..	Assistant, Octavius, Steel & Co. ...	14, Old Court House Street ...	Hindu	
1833	Biswas, Gobind Chunder ...	Clerk, Commercial Union Assurance Co, Ld.	29, Dalhousie Square ...	ditto	
1834	Biswas, Gopal Chunder ...	Clerk, Mackenzie, Lyall & Co ...	2, Lyons Range ...	ditto	
1835	Biswas, K N ...	Assistant, Landale and Morgan. ...	5, Mission Row ...	ditto	
1836	Biswas, Paul Chunder Mohun.	Clerk, Office of Pay Examiner, Military Accounts Department, E. C.	3, Koila Ghat Street ...	Christian	
1837	Biswas, Preo Krishna ...	Sub-Engineer, Office of Executive Engineer, 1st Calcutta Division.	Writers' Buildings ...	Hindu	
*1838	Biswas, Sarat Chunder ...	Jr. 3rd class Clerk, Lower Division, Office of Secy. to the Government of India, Military Department.	6, Esplanade, East ...	ditto	
1839	Bose, Abinash Chunder ...	Supervisor, District Engineer's Office, District No. 2, Municipal Office.	Municipal Office ...	ditto	
1840	Bose, Abinash Chunder ...	Assistant Superintendent, Accountant-General's Office, Bengal.	The Treasury ...	ditto	
*1841	Bose, Amrito Lall ...	6th class Clerk, Secretariat, Government of India, P W D.	Imperial Secretariat Buildings	ditto	
1842	Bose, Ashu Tosh ...	Clerk, Comptroller-General's Office ...	The Treasury ...	ditto	
1843	Bose, Bama Churn ...	Assistant, Government of India, Statistical Department.	7, Koila Ghat Street ...	ditto	
1844	Bose, Behari Lal ...	Assistant, J H Elliott & Co, Ld ...	29, Strand ...	ditto	
1845	Bose, Bejoy Chunder ...	Assistant, General and Revenue Departments, Bengal Secretariat.	Writers' Buildings ...	ditto	
1846	Bose, Bepin Behari ...	Assistant, W N Bhose & Co ...	63, Ezra Street ...	ditto	
1847	Bose, Bishnoo Churn ...	Sub-Assessor ...	Municipal Office ...	ditto	
1848	Bose, Boroda Kanto ...	Clerk, Office of Controller of Military Accounts, Accounts Branch, E C.	3, Koila Ghat Street ...	ditto	
1849	Bose, Boroda Kanto ...	3rd grade Accountant, Office of Controller of Military Accounts, E C.	3, Koila Ghat Street ...	ditto	

1850	Bose, Chunder Nath	...	Assistant, Williamson, Magor & Co	4, Mangoe Lane	...	ditto
*.*1851	Bose, Debendra Nath	...	Assistant, Bengal Office, Judicial, Political and Appointment Departments.	Writers' Buildings	...	ditto
1852	Bose, Doorga Dass	...	Clerk, National Bank of India, Ld...	104, Clive Street	...	ditto
1853	Bose, Durga Pada	...	Inspector, Corporation of Calcutta, Suburban Drainage Department.	4, Corporation Street	...	ditto
1854	Bose, Fakir Chand	...	Assistant, Board of Revenue, L. P....	2, Bankshall Street	...	ditto
1855	Bose, Ghonesham	...	Assistant, Graham & Co ...	9, Clive Street	...	ditto
1856	Bose, Girindra Nath	...	Clerk, Audit Office, E I R ...	E I R House	...	ditto
*.*1857	Bose, Haradhone	...	Assistant, Bengal Secretariat, General and Revenue Departments.	Writers' Buildings	...	ditto
1858	Bose, Haran Chandra	...	Assistant, Office of Secretary to the Government of India, Finance and Commerce Departments.	Treasury Buildings	...	ditto
1859	Bose, Hari Das	...	Clerk, Office of Pay Examiner, Military Accounts Department, E C.	3, Koila Ghat Street	...	ditto
*.*1860	Bose, Jnanendra Nath	...	Assistant, Bengal Office, Judicial, Political and Appointment Departments.	Writers' Buildings	...	ditto
1861	Bose, J C	...	Inspector, Collector's Department, Municipal Office.	Municipal Office	...	ditto
*.*1862	Bose, Jeebundhone	...	Clerk, Home Department ...	Home Department	...	Christian
1863	Bose, Jogendro Chunder	...	Dy. License Officer, Municipal Office	Municipal Office	...	Hindu
1864	Bose, Jogendro Krishna	...	License Inspector, Municipal Office	Municipal Office	...	ditto
1865	Bose, Jogendro Lal	...	Storekeeper, Burn & Co ...	7, Hastings Street	...	ditto
1866	Bose, Jogendro Nath	...	4th class Assistant, Controller of Military Accounts, E C, Supply and Transport Branch.	3, Koila Ghat Street	...	ditto
1867	Bose, Joogal Kishore	...	Clerk, G. F. Kellner & Co ...	32, Chowringhee	...	ditto
1868	Bose, K C	...	Supervisor, District Engineer's Office, District No. I, Municipal Office.	79, Cornwallis Street	...	ditto
1869	Bose, Khagendra Nath	...	Assistant, Bengal Office, Judicial, Political and Appointment Departments.	Writers' Buildings	...	ditto

No.	Names.	Style or Calling.	Residence or place of business.	Religion.	Remarks.
	B				
1870	Bose, Khetter Mohun ...	Head Clerk, Agent and Chief Engineer's Office, B C Railway.	159-1, Bowbazar Street ...	Hindu	
1871	Bose, Lolit Mohun ...	Financier, Ezakiel Cohen & Co ...	85, Grey Street ...	ditto	
1872	Bose, Lokenath ...	Senior 6th class Clerk, Upper Division, Office of Secretary to the Government of India, Military Department.	6, Esplanade, East ...	ditto	
1873	Bose, Manmatha Mohan ...	Head Master and Lecturer, General Assembly's Institution.	Cornwallis Square ...	ditto	
1874	Bose, Manmatha Nath ...	Clerk, Comptroller-General's Office ...	The Treasury ...	ditto	
1875	Bose, Manmatha Nath ...	Clerk, J G Bagram & Co ...	14-2, Clive Row ...	ditto	
1876	Bose, Mon Mohun ...	Assistant, Office of Private Secretary to the Viceroy.	6, Council House Street ...	ditto	
1877	Bose, Nanda Lal ...	Junior 5th class Clerk, Lower Division, Office of Secretary to the Government of India, Military Department.	6, Esplanade, East ...	ditto	
1878	Bose, Narain Chunder ...	Head Clerk, Chief Supply and Transport Office, Presidency District.	5, Strand ...	ditto	
1879	Bose, Nares Chunder ...	District Building Surveyor, Municipal Office.	Municipal Office ...	ditto	
1880	Bose, Poorna Chunder ...	Assistant, Petrocochino Brothers ...	4, Clive Ghat Street ...	ditto	
1881	Bose, Prasanna Kumar ...	Clerk, Home Department ...	Home Department ...	ditto	
1882	Bose, Priya Nath ...	Accountant, Office of Examiner of Ordnance Factory Accounts in India.	1, Koila Ghat Street ...	ditto	
1883	Bose, Probod Chunder ...	Cashier, Grindlay & Co ...	11, Hastings Street ...	ditto	
1884	Bose, Probodh Chunder ...	Assistant, Shaw, Wallace & Co ...	20, Strand Road ...	ditto	
1885	Bose, Purna Chandro ...	2nd grade Accountant, Office of Examiner, P. W. Accounts, Bengal.	8, Lyons Range ...	ditto	
1886	Bose, Rajkrishna ...	Assistant to Director of Public Instruction, Bengal.	Writers' Buildings ...	ditto	
1887	Bose, Rhedoy Krishna ...	Assistant, Massey & Co ...	5, Clive Row ...	ditto	
1888	Bose, Russicklal ...	Clerk, Office of Accountant-General, Public Works Department.	Imperial Secretariat Buildings	ditto	

1889	Bose, S	... Proprietor, F. Kapp & Co	... 3, Humayon Place	...	ditto
1890	Bose, Sarrat Chunder	... Clerk, Kinmond & Co	... 5, Garstin's Place	...	ditto
*1891	Bose, Satish Chunder	... Assistant, Bengal Secretariat, Judicial, Political and Appointment Departments.	Writers' Buildings	...	ditto
1892	Bose, Satish Chunder	... Assistant, Office of Inspector-General of Police, L. P.	Writers' Buildings	...	ditto
1893	Bose, Satish Chunder	... Clerk, Walter, Locke & Co, Ld	... 4, Esplanade	...	ditto
1894	Bose, S C	... Sanitary Inspector, District No. I, Municipal Office.	79, Cornwallis Street	...	ditto
1895	Bose, Siddesur	... Accountant, Military Works, Office of Commanding Royal Engineer, Presidency District.	Fort William	...	ditto
1896	Bose, Siddesur	... Accountant, Office of Government Examiner of Railway Accounts, E I R	E I R House	...	ditto
1897	Bose, Sreeram Chunder	... Assistant, Government of India, Statistical Department.	7, Koila Ghat Street	...	ditto
1898	Bose, Sris Chandra	... Overseer, 1st grade, Office of Electrical Engineer to the Government of Bengal.	58, Chowringhee Road	...	ditto
1899	Bose, Upendra Nath	... Assistant, Bengal Secretariat, Financial Department.	Writers' Buildings	...	ditto
1900	Bose, Upendra Nath	... Assistant, Turner, Morrison & Co	... 6, Lyons Range	...	ditto
1901	Burkatulla, Munshi	... Assistant, Bengal Secretariat, Judicial, Political and Appointment Departments.	Writers' Buildings	...	Muhammadan
1902	Burral, Hari Charan	... Bill and Stock Broker	... 28, Ram Mohun Ghose's Lane		Hindu
1903	Burral, Goburdhone	... Clerk, National Bank of India, Ld.	104, Clive Street	...	ditto
*1904	Burral, Manick Lal	... Junior 2nd class Clerk, Lower Division, Office of Secretary to the Government of India, Military Department.	6, Esplanade, East	...	ditto
1905	Buxy, Prosunno Coomar	... Assistant, Board of Revenue, L P	... 2, Bankshall Street	...	ditto
1906	Byaack, Bharat Chunder	... Clerk, Office of Pay Examiner, Military Accounts Department, E C.	3, Koila Ghat Street	...	ditto
1907	Byaack, Hurry Mohan	... Treasurer, Office of the Calcutta Port Commissioners.	Strand Road	...	ditto

No.	Names.	Style or Calling.	Residence or place of business.	Religion.	Remarks.
	B				
1908	Bysack, Jogodanund ...	Assistant, Board of Revenue, L P ...	2, Bankshall Street ...	Hindu	
1909	Bysack, Lal Behari ...	Clerk, Office of Pay Examiner, Military Accounts Department, E C.	3, Koila Ghat Street ...	ditto	
1910	Bysack, Nando Lal ...	Assistant, Groesmann & Co ...	2, Fairlie Place ...	ditto	
1911	Bysack, Nanda Lal ...	Assistant, McLeod & Co ...	31, Dalhousie Square ...	ditto	
1912	Bysack, Nobin Chunder ...	Superintendent, Comptroller-General's Office.	The Treasury ...	ditto	
1913	Bysack, Nritya Kissore ...	1st class Clerk, Office of Accountant-General, Military Department.	6, Esplanade Row, East ...	ditto	
	C				
1914	Chatterjee, A C ...	Assistant, F W Howse & Co ...	3, Lall Bazar ...	ditto	
1915	Chatterjee, Akshaya Kumar, M.A.	Professor, Ripon College ...	60, Mirzapore Street ...	ditto	
1916	Chatterjee, Ashutosh, M.A.	Professor, Sanskrit College ...	College Square ...	ditto	
1917	Chatterjee, Atal Bihary ...	Assistant, Bengal Secretariat, Municipal Department.	Writers' Buildings ...	ditto	
1918	Chatterjee, Atul Chandra ...	6th class Clerk, Secretariat, Government of India, Public Works Department.	Imperial Secretariat Buildings	ditto	
1919	Chatterjee, Aukhoy Coomar	Clerk, Chartered Bank of India, Australia and China.	5, Council House Street ...	ditto	
1920	Chatterjee, Behari Lal ...	Assistant, McLeod & Co ...	31, Dalhousie Square ...	ditto	
1921	Chatterjee, Bhola Nath ...	2nd Assistant, Office of Military Secretary to the Viceroy.	Government House ...	ditto	
1922	Chatterjee, Bhusan Chunder	Assistant, Office of Secretary to the Government of India, Legislative Department.	Legislative Department Office, 5, Esplanade, West.	ditto	
1923	Chatterjee, Bhut Nath ...	2nd class Assistant, Office of Controller of Military Accounts, E C, Supply and Transport Branch.	3, Koila Ghat Street ...	ditto	
1924	Chatterjee, Dasu Kumar ...	Assistant, Office of Secretary to the Government of India, Department of Finance and Commerce.	Treasury Buildings ...	ditto	

1925	Chatterjee, Debendra Nath	Est. Clerk, Agent's Office, E I R.	E I R House ...	ditto
1926	Chatterjee, Doorga Churn ...	Assistant, Office of Calcutta Trades Association.	Dalhousie Institute ...	ditto
1927	Chatterjee, Doorga Dass ...	Assistant, Landale and Morgan ...	5, Mission Row ...	ditto
1928	Chatterjee, Gopal Chunder	Assistant, Anderson, Wright & Co ...	22, Strand ...	ditto
1929	Chatterjee, Gopal Chunder	Clerk, Audit Office, E I R ...	E I R House ...	ditto
1930	Chatterjee, Gopal Lal ...	Head Assistant, Bengal Office, Judicial, Political and Appointment Departments.	Writers' Buildings ...	ditto
1931	Chatterjee, Haran Chunder	Assistant, Office of Secretary to the Government of India, Department of Finance and Commerce.	Treasury Buildings ...	ditto
1932	Chatterjee, Hari Narain ...	Assistant, Harman & Co ...	12, Government Place ...	ditto
1933	Chatterjee, Hari Pada ...	License Inspector ...	Municipal Office ...	ditto
1934	Chatterjee, Heeralal ...	2nd grade Accountant, Office of Examiner of Ordnance and Clothing Branches.	Military Accounts Department Buildings, Koila Ghat Street.	ditto
1935	Chatterjee, Huri Dass ...	Cloth shop-keeper ...	Jugul Kissore Dass's Lane, Shooripara.	ditto
1936	Chatterjee, Jagodanand ...	2nd Clerk, Agent's Office, E I R ...	E I R House ...	ditto
1937	Chatterjee, Kali Nath ...	Assistant, O. Steel & Co ...	14, Old Court House Street ...	ditto
1938	Chatterjee, Kedar Nath ...	Clerk, Office of Chief Superintendent, Traffic Department, E I R.	E I R House ...	ditto
1939	Chatterjee, Krishnadhan ...	Assistant, Bengal Office, Judicial, Political and Appointment Departments.	Writers' Buildings ...	ditto
1940	Chatterjee, Kristo Lal ...	Assistant Master, Hare School ...	College Square ...	ditto
1941	Chatterjee, M N ...	Assistant, Birkmyre Brothers ...	6, Clive Row ...	ditto
1942	Chatterjee, Mohendra Chunder.	Head Assistant, Legal Remembrancer's Office.	High Court ...	ditto
1943	Chatterjee, Mohendro Lal	Clerk, Comptroller-General's Office...	The Treasury ...	ditto
1944	Chatterjee, Mohendro Lal	Assistant, George Henderson & Co ...	100, Clive Street ...	ditto
1945	Chatterjee, Monmotho Mohan.	Assistant, Board of Revenue, L P.	2, Bankshall Street ...	ditto

No.	Names	Style or Calling	Residence or place of business.	Religion.	Remarks.
	C				
1946	Chatterjee, Nanda Lal ...	Assistant, Board of Revenue, L P ...	2, Bankshall Street ...	Hindu	
1947	Chatterjee, Narain Chunder	Assistant, Turner, Morrison & Co ...	6, Lyons Range ...	ditto	
1948	Chatterjee, Narayan Chandra, B.A.	Head Master, S V S Vidyalaya ...	153, Harrison Road ..	ditto	
1949	Chatterjee, Narayan Das ...	Clerk, North British and Mercantile Insurance Office.	100, Clive Street ...	ditto	
1950	Chatterjee, Nibaran Chunder.	Head Assistant, Office of Inspector-General of Civil Hospitals and Sanitary Commissioner for Bengal.	Writers' Buildings ...	ditto	
1951	Chatterjee, Nogendro Chunder.	Assistant, Municipal Department, Bengal Secretariat.	Writers' Buildings ...	ditto	
1952	Chatterjee, Norendro Nath, B.A.	Assistant, Office of Secretary to the Government of Bengal, Public Works Department.	Writers' Buildings ...	ditto	
1953	Chatterjee, Noresh Chunder	Assistant, Macneill & Co ...	2, Clive Ghat Street ...	ditto	
1954	Chatterjee, Promoda Churn	Accountant, Chief Supply and Transport Office, Presidency District.	5, Strand ...	ditto	
1955	Chatterjee, P C ...	Supervisor, District No. III, District Engineer's Office, Calcutta Corporation.	10, Sudder Street ...	ditto	
1956	Chatterjee, Poorna Chandra	Inhabitant	Sukea's Street, Bar Simla ...	ditto	
1957	Chatterjee, Priya Nath, ...	Clerk, Comptroller-General's Office ..	The Treasury ...	ditto	
1958	Chatterjee, Probodh Chandra.	Assistant Accountant, Office of the Calcutta Port Commissioners.	Strand Road ...	ditto	
1959	Chatterjee, Radhica Nath	Clerk, Office of Pay Examiner, Military Accounts Department, E C.	3, Koila Ghat Street ...	ditto	
1960	Chatterjee Raja Ram ...	4th class Assistant, Office of Controller of Military Accounts, E C, Supply and Transport Branch.	3, Koila Ghat Street ...	ditto	
1961	Chatterjee, Rakhal Dass ...	Assistant, Bengal Secretariat, Municipal Department.	Writers' Buildings ...	ditto	

1962	Chatterjee, Sarat Chunder ...	Assistant, Bengal Office, Judicial, Political and Appointment Departments.	Writers' Buildings	...	ditto
1963	Chatterjee, Sarat Chunder ...	Building Surveyor, District No. II ...	Municipal Office	...	ditto
1964	Chatterjee, Saroda Charan...	Assistant, Government of India, Statistical Department	7, Koila Ghat Street	...	ditto
1965	Chatterjee, Saroda Prosad...	Inhabitant	Sukea's Street	...	ditto
1966	Chatterjee, S C ...	Accountant, Accounts Department ...	Municipal Office	...	Christian
**1967	Chatterjee, Shama Churn ...	1st class Clerk, Office of Accountant-General, Military Department.	6, Esplanade Row, East	...	Hindu
1968	Chatterjee, Tara Prosonno	Assistant, Bengal Secretariat, Public Works Department.	Writers' Buildings	...	ditto
1969	Chatterjee, Tara Prosonno	Assistant, Turner, Morrison & Co ...	6, Lyons Range	...	ditto
1970	Chatterjee, Upendra Chandra.	Junior 4th Class Clerk, Lower Division, Office of Secretary to the Government of India, Military Department.	6, Esplanade, East	...	ditto
**1971	Chatterjee, Upendra Nath	Assistant, Legislative Department, Government of India.	5, Esplanade, West	...	ditto
1972	Chatterjee, Woomesh Chandra.	Education Department, Presidency College.	College Square	...	ditto
1973	Chattoraj, Kali Prosanno, M.A.	Professor, City College ...	13, Mirzapore Street	...	ditto
**1974	Chiranji Lall ...	Assistant, Office of Secretary to the Government of India, Revenue and Agricultural Department, General Branch.	Imperial Secretariat Buildings		ditto
1975	Chowdhry, A C ...	Assistant, Landale and Morgan ...	5, Mission Row	...	ditto
**1976	Chowdhry, Gyan Chunder...	Head Assistant, Bengal Office, Judicial, Political and Appointment Departments.	Writers' Buildings	...	ditto
1977	Chowdhry, J ...	Sanitary Inspector, District No. II, Municipal Office.	Municipal Office	...	ditto
1978	Chowdhry, Kirti Chunder	Cloth shop-keeper	204, Cornwallis Street	...	ditto
1979	Chowdhry, Nibaran Chunder.	Clerk, Office of Controller of Military Accounts, E C, Accounts Branch.	3, Koila Ghat Street	...	ditto

No.	Names.	Style or Calling.	Residence or place of business.	Religion.	Remarks.
	C				
1980	Chowdhry, Prosonno Coomar	Inspector, Contractors' Accounts, Office of Superintendent, Government Printing, India.	8, Hastings Street ...	Hindu	
**1981	Chowdhry, Surjya Kumar (Rai Bahadur).	Superintendent, Office of Secretary to the Government of India, Finance and Commerce Department.	Treasury Buildings ...	ditto	
1982	Chuckerbutty, A C ...	Accountant, W Newman & Co ...	4, Dalhousie Square ...	ditto	
1983	Chuckerbutty, Ashutosh ...	Assistant, J Thomas & Co ...	8, Mission Row ...	ditto	
1984	Chuckerbutty, B C ...	Head Clerk, John Dewar & Sons, Ld	10, Hare Street ...	ditto	
1985	Chuckerbutty, Bhut Nath ...	2nd Superintendent of Works, Office of the Calcutta Port Commissioners.	Strand Road ...	ditto	
1986	Chuckerbutty, Debendro Nath.	1st grade Accountant, Office of Examiner, P. W. Accounts, Bengal.	8, Lyons Range ...	ditto	
1987	Chuckerbutty, Gogan Ch.	Assistant, Baptist Mission Press ...	41, Lower Circular Road ...	ditto	
1988	Chuckerbutty, J ...	Sanitary Inspector, District, No. III, Municipal Office.	Municipal Office ...	ditto	
1989	Chuckerbutty, Jogendra Nath.	Book-keeper, Burn & Co ...	7, Hastings Street ...	ditto	
1990	Chuckerbutty, Jadub Chunder.	Teacher, Government School of Art	28, Chowringhee Road ...	ditto	
1991	Chuckerbutty, Kali Prosunno.	Assistant, Board of Revenue, L. P.	2, Bankshall Street ...	ditto	
1992	Chuckerbutty, Kally Dass ...	Assistant, Mackinnon, Mackenzie & Co	16, Strand ...	ditto	
1993	Chuckerbutty, Lal Gopal, M.A.	Professor, Ripon College ...	60, Mirzapore Street ...	ditto	
**1994	Chuckerbutty, Manmatha Nath.	Clerk, Home Department ...	Home Department ...	ditto	
1995	Chuckerbutty, Manmohan	Assistant Superintendent, Accountant-General's Office, Bengal	The Treasury ...	ditto	
1996	Chuckerbutty, Mohendra Nath.	District Building Surveyor, District No. I, Municipal Office.	Municipal Office ...	ditto	

1997	Chuckerbutty, Nishakanta ...	Assistant, Bengal Secretariat, Municipal Department.	Writers' Buildings	...	ditto
1998	Chuckerbutty, N L ...	Assistant, F W Howse & Co ...	3, Lall Bazar	...	ditto
1999	Chuckerbutty, Panchcowry	Head Clerk, Doveton College ...	41, Free School Street	...	ditto
2000	Chuckerbutty, R C ...	Sanitary Inspector, District No. I, Municipal Office.	79, Cornwallis Street	...	ditto
2001	Chuckerbutty, Rakhaldas	Education Department, Presidency College.	College Square	...	ditto
2002	Chuckerbutty, Sita Nath ...	Assistant, Begg, Dunlop & Co ...	12, Mission Row	...	ditto
2003	Chuckerbutty, Syama Charan.	Assistant, Bengal Secretariat, General and Revenue Departments.	Writers' Buildings	...	ditto
2004	Chuckerbutty, Upendra Nath.	P W Inspector, Office of the Calcutta Port Commissioners.	Strand Road	...	ditto
2005	Chuckerbutty, Vanamali, M.A.	Lecturer, Sanskrit College ...	College Square	...	ditto
2006	Chunder, Girish Chunder ...	Treasurer, Calcutta Collectorate ...	3, Charnock Place	...	ditto
2007	Chunder, Gobinda Lall ...	Clerk, Comptroller-General's Office	The Treasury	...	ditto
2008	Chunder, Nundolall ...	Assistant, Finlay, Muir & Co ...	1, Clive Street	...	ditto
2009	Chunder, N N ...	Book-keeper, Marshall, Sons & Co, Ld	99, Clive Street	...	ditto
2010	Chunder, Upendra Nath ...	Assistant, Office of Commissioner of Excise and Salt, Bengal.	2, Bankshall Street	...	ditto
2011	Cowar, A P ...	Sanitary Inspector, Municipal Office	26, Cornwallis Street	...	ditto
2012	Cowasji, Edulji Bharucha	Proprietor, C Ardesher & Co ...	178, Dhurumtolla Street	...	Parsee
2013	Cowasji, K ...	Chief Draftsman, Chief Engineer's Office.	4, Corporation Street	...	Zoroastrian
2014	Cowasji, M ...	Assistant, Shaw, Wallace & Co	20, Strand Road	...	ditto
	D				
2015	Dalal, Madan Mohan ...	Assistant Accountant, Jessop & Co, Ld	93, Clive Street	...	Hindu
2016	Dass, Ambica Churn ...	Clerk, Office of Pay Examiner, Military Accounts Department, E C.	3, Koila Ghat Street	...	ditto
2017	Dass, Annada Prosad ...	Assistant, Shaw, Wallace & Co ...	20, Strand Road	...	ditto
2018	Dass, Basanto Kumar ...	Deputy Inspector of Excise, Calcutta Collectorate.	3, Charnock Place	...	ditto
2019	Dass, Behary Lall ...	Inhabitant ...	Kopaleetollah	...	ditto

No.	Names.	Style or Calling.	Residence or place of business.	Religion.	Remarks
	D				
2020	Dass, Benode Behary ...	Inhabitant ...	16, Sunker Ghose's Lane ...	Hindu	
2021	Dass, Bhoyrub Chunder ...	Clerk, Commercial Union Assurance Co, Ld	29, Dalhousie Square ...	ditto	
*2022	Dass, Fatic Chunder ...	Clerk, Office of Accountant-General, Public Works Department.	Imperial Secretariat Buildings	ditto	
2023	Dass, Girish Chunder, B.A. ..	Assistant, Office of Secretary to the Government of Bengal, Public Works Department.	Writers' Buildings ...	ditto	
2024	Dass, Gopal Chunder, I ...	Clerk, Correspondance Branch, Surveyor-General's Office.	13, Wood Street ...	ditto	
2025	Dass, Gopaul Chunder ...	Clerk, Home Department ...	Home Department ...	ditto	
2026	Dass, Gopi Chand ...	Assistant, Board of Revenue, L P ...	2. Bankshall Street ...	ditto	
2027	Dass, Guru Prosad ...	Assistant, Mackintosh, Burn & Co	8, Esplanade, East ...	ditto	
*2028	Dass, Hari Nath ...	5th class Clerk, Secretariat, Government of India, Public Works Department.	Imperial Secretariat Buildings	ditto	
2029	Dass, Hari Pada ...	Assistant, *Indian Planting and Gardening.*	5-1, Council House Street ...	ditto	
2030	Dass, Jugger Nath ..	Firm of Jugger Nath Dass & Co ...	97, Mooktaram Babu's Street	ditto	
2031	Dass, Kailas Chunder ...	Accountant, Office of Superintendent, Government Printing, India.	8, Hastings Street ...	ditto	
2032	Dass, Kailas Chunder ...	Superintendent, Office of Accountant-General, Bengal.	The Treasury ...	ditto	
2033	Dass, Kali Prosanno, B.A.	Lecturer, Bethune College ...	181, Cornwallis Street ...	Brahmo	
2034	Dass, Kristo Mohun ...	Inhabitant ...	Kopalectollah ...	Hindu	
2035	Dass, Lukhi Narain ...	Clerk, Mercantile Bank of India, Ld	28, Dalhousie Square ...	ditto	
2036	Dass, Mohindra Nath ...	Cashier, Watson and Summers ...	3-1, Wellesley Place ...	ditto	
2037	Dass, Nobo Coomar ...	Accountant, Alex. Brault ...	3, Waterloo Street ...	ditto	
2038	Dass, Nritya Lall ...	License Inspector, Municipal Office...	Municipal Office ...	ditto	
2039	Dass, Nund Lal	Managing Proprietor, K Dasch & Co	54, Wellington Street ...	ditto	

2040	Dass, Peary Mohan ...	Hackney Carriage Inspector, Calcutta Corporation.	Municipal Office ...		ditto
2041	Dass, Prasanna Kumar ...	Assistant, Bengal Secretariat, General and Revenue Departments.	Writers' Buildings ...		ditto
2042	Dass, Radha Ballub ...	Assistant, Manton & Co ...	13, Old Court House Street ...		ditto
2043	Dass, Radha Ballub ...	Clerk, Controller of Stores' Office, E I R.	E I R House ...		ditto
2044	Dass, Rakhal Chunder ...	License Inspector ...	Municipal Office ...		ditto
2045	Dass, Roma Nath ...	Assistant, Walker, Goward & Co ...	32, Jackson's Ghat Street ...		ditto
2046	Dass, Shib Chunder ...	Junior 3rd class Clerk, Lower Division, Office of Secretary to the Government of India, Military Department.	6, Esplanade, East ...		ditto
2047	Dass, S L ...	Supervisor, District No. III, District Engineer's Office, Calcutta Corporation.	10, Sudder Street ...		Christian
2048	Dass, Soshi Bhusan ...	Assistant, Bengal Secretariat, Judicial, Political and Appointment Departments.	Writers' Buildings ...		Hindu
2049	Dass, Sreenath ...	Overseer, Bengal Secretariat Press ...	Writers' Buildings ...		ditto
2050	Dass, Surendra Chunder ...	License Inspector ...	Municipal Office ...		ditto
2051	Dass, Suval Krishna ...	Assistant Master, Hindu School ...	College Square ...		ditto
2052	Dass, Tarini Charan ...	Junior 2nd Class Clerk, Lower Division, Office of Secretary to the Government of India, Military Department.	6, Esplanade, East ...		ditto
2053	Dass Gupta, Hem Chandra	Education Department, Presidency College.	College Square ...		ditto
2054	Datta Sharma, Pandeya Umapati, B.A.	Principal, S. V. S. Vidyalaya ...	153, Harrison Road ...		ditto
2055	Daw, Girish Chunder ...	Assistant, Bengal Secretariat, Public Works Department.	Writers' Buildings ...		ditto
2056	Daw, Sarat Chunder ...	Inspector, Suburban Drainage Department, Municipal Office.	4, Corporation Street ...		ditto
2057	Deb, Ashu Tosh ...	License Inspector ...	Municipal Office ...		ditto

No	Names.	Style or Calling.	Residence or place of business.	Religion.	Remarks.
	D				
2058	Deb, Samarendra Krishna...	License Inspector	Municipal Office ...	Hindu	
2059	Deb, Satya Priya ...	Assistant, Board of Revenue, L. P. ...	2, Bankshall Street ...	ditto	
*2060	Dewan Chand ...	Clerk, Home Department ...	Home Department ...	ditto	
2061	Dey, Aubinash Chunder ...	Assistant Treasurer, E I R ...	E I R House ...	ditto	
2062	Dey, Audhor Chunder ...	Assistant Accountant, Jessop & Co, Ld	93, Clive Street ...	ditto	
2063	Dey, Bepin Behari ...	Accountant, Office of Executive Engineer, 2nd Calcutta Division.	Writers' Buildings ...	ditto	
2064	Dey, Bireswar ...	Assistant, Office of Inspector-General of Civil Hospitals and Sanitary Commissioner for Bengal.	Writers' Buildings ...	ditto	
2065	Dey, Braja Nath ...	Superintendent, Metropolitan Institution.	22, Sunkur Ghose's Lane, Bar Simla.	ditto	
2066	Dey, Chuni Lall ...	Head Clerk, Surveyor-General's Office, Correspondence Branch.	13, Wood Street ...	ditto	
*2067	Dey, Gajendra Nath, B.A....	Assistant, Bengal Secretariat, General and Revenue Departments.	Writers' Buildings ...	ditto	
2068	Dey, Girish Chunder ...	Assistant Assessor, Municipal Office	Municipal Office ...	ditto	
2069	Dey, Gour Gopal ...	Head Clerk, Office of Examiner, Public Works Accounts, Bengal.	8, Lyons Range ...	ditto	
2070	Dey, Jogesh Chunder ...	Assistant, Finlay, Muir & Co ...	1, Clive Street ...	ditto	
2071	Dey, Kasipati ...	Accountant, 3rd grade, Office of Accountant-General, Military Department.	6, Esplanade Row, East ...	ditto	
2072	Dey, Mohendra Lal ...	Clerk, Office of Comptroller-General and Comptroller, India Treasuries.	The Treasury ...	ditto	
2073	Dey, Manik Lal ...	Cashier, Sun Life Office ...	7, Council House Street ...	ditto	
*2074	Dey, Matilal ...	Jr. 2nd Class Clerk, Lower Division, Office of Secretary to the Government of India, Military Department.	6, Esplanade, East ...	ditto	
2075	Dey, M L ...	Proprietor, M S Dey & Co ...	46, Radha Bazar Street ...	ditto	

2076	Dey, Nando Lal	...	Overseer, Office of Executive Engineer, 1st Calcutta Division.	Writers' Buildings ...	ditto
*2077	Dey, N N	...	Assistant, Office of Secretary to the Government of India, Revenue and Agricultural Department, Forest Branch.	Imperial Secretariat Buildings	ditto
2078	Dey, Parbutty Churn	...	Assistant, Finlay, Muir & Co ...	1, Clive Street ...	ditto
2079	Dey, Pran Kissen	...	Rent Collector, Office of the Calcutta Port Commissioners.	Strand Road ...	ditto
2080	Dey, Purna Chunder	...	Assistant, Balmer, Lawrie & Co ...	103, Clive Street ...	ditto
2081	Dey, Purna Chunder	...	Partner, G C Dey & Co ...	128, Lower Circular Road ...	ditto
2082	Dey, Shyam Kumar	...	Assistant, Arlington & Co ...	5, Dalhousie Square ...	ditto
2083	Dey, Siddheswar	...	2nd Clerk, Presidency Commissioner's Office.	3, Charnock Place ...	ditto
*2084	Dey, Soobul Chunder	...	6th Class Clerk, Secretariat, Government of India, P W D.	Imperial Secretariat Buildings	ditto
2085	Dey, Soorendra Mohun	...	Proprietor, Soorendra Mohun Dey & Co.	18, Rajah Woodmunt's Street	ditto
2086	Dey, Suresh Chunder	...	Assistant, Office of Commissioner of Excise and Salt, Bengal	2, Bankshall Street ...	ditto
2087	Dey, Syama Churn	...	Supervisor, Office of Executive Engineer, 2nd Calcutta Division.	Writers' Buildings ...	ditto
2088	Dey, Troylucko Nath	...	Clerk, Comptroller-General's Office ...	The Treasury ...	ditto
*2089	Dey, Upendra Nath	...	Assistant, Bengal Secretariat, Judicial, Political and Appointment Departments.	Writers' Buildings ...	ditto
2090	Dhur, A T	...	Assistant, Shrager Brothers ...	28, Dalhousie Square ...	ditto
2091	Dhur, Bepin Vehary	...	Treasurer, Alliance Bank of Simla, Ld	8, Council House Street ...	ditto
2092	Dhur, Chundi Churn	...	Cashier, Licensed Measurers' Department, Bengal Chamber of Commerce.	2, Clive Street ...	ditto
2093	Dhur, Jogendro Nath	...	Assistant, Graham & Co ...	9, Clive Street ...	ditto
*2094	Dhur, Kangalee Churn	...	7th Class Clerk, Office of Secretary to the Government of India, Public Works Department.	Imperial Secretariat Buildings	ditto
2095	Dhur, Keshub Lall	...	Sole Proprietor, Kanye Lall Dhur & Son.	40, Old China Bazar Street ...	ditto

No.	Names.	Style or Calling.	Residence or place of business.	Religion.	Remarks.
	D				
2096	Dhur, Nitra Lal ...	Accountant, Office of Pay Examiner, Military Accounts Department, E C.	3, Koila Ghat Street ...	Hindu	
2097	Dhur, Nritto Lall ...	Accountant, Office of Controller of Military Accounts, E C. Accounts Branch.	3, Koila Ghat Street ...	ditto	
2098	Dhur, Parvati Churn ...	Assistant, Government of India, Statistical Department.	7, Koila Ghat Street ...	ditto	
2099	Dhur, Upendra Nath ...	Assistant, Board of Revenue, L P ...	2, Bankshall Street ...	ditto	
2100	Dutt, Ambika Churn ...	Junior 3rd Class Clerk, Lower Division, Office of Secretary to the Government of India, Military Department.	6, Esplanade, East ...	ditto	
2101	Dutt, Amirto Lall ...	Assistant, Board of Revenue, L P ...	2, Bankshall Street ...	ditto	
2102	Dutt, Barun Chandra ...	Professor, General Assembly's Institution.	Cornwallis Square ...	Christian	
2103	Dutt, Chundi Churn ...	Clerk, Office of Comptroller-General and Comptroller, India Treasuries.	The Treasury ...	Hindu	
2104	Dutt, Chundi Churn ...	Assistant, Kettlewell, Bullen & Co ...	21, Strand Road ...	ditto	
2105	Dutt, D B ...	Assistant, British American Tobacco Company, Ld.	95, Clive Street ...	ditto	
2106	Dutt, Debendra Nath ...	Assistant, Office of Secretary to the Government of India, Finance and Commerce Department.	Treasury Buildings ...	ditto	
2107	Dutt, Dino Nath ...	Superintendent, Comptroller-General's Office.	The Treasury ...	ditto	
2108	Dutt, Dwarka Nath ...	Merchant ...	Colootollah ...	ditto	
2109	Dutt, Dwijan Chunder ...	Suit Superintendent, Collector's Department.	Municipal Office ...	Christian	
2110	Dutt, Ganesh Chunder ...	Assistant, W. Leslie & Co. ...	2, Chowringhee ...	Hindu	
2111	Dutt, Gopi Chand ...	3rd grade Accountant, Office of Controller of Military Accounts, E C.	3, Koila Ghat Street ...	ditto	
2112	Dutt, Grish Chunder ...	Assistant, W N Bhose & Co ...	63, Ezra Street ...	ditto	
2113	Dutt, Hari Das ...	Clerk, Chartered Bank of India, Australia and China.	5, Council House Street ...	ditto	

		Merchant	...	22, Ghose's Lane	... ditto
2115	Dutt, Hem Nath	... Clerk, Surveyor-General's Office, Correspondence Branch.		13, Wood Street	... ditto
*2116	Dutt, Hurry Churn	... Junior 3rd class Clerk, Lower Division, Office of Secretary to the Government of India, Military Department.		6, Esplanade, East	... ditto
2117	Dutt, Jadu Nath	... Assistant, Mackintosh, Burn & Co	...	8, Esplanade, East	... ditto
2118	Dutt, J N	... Analyst, Municipal Office	...	7, Sudder Street	... ditto
2119	Dutt, Jogendra Chunder	... Inhabitant	...	Ramjan Ostagar's Lane, Nimtolla.	ditto
2120	Dutt, Jogendra Nath	... Head Clerk, James Simpson & Co, Ld.		32-1, Dalhousie Square	... ditto
2121	Dutt, Jotish Chunder	... License Inspector	...	Municipal Office	... ditto
2122	Dutt, K	... Superintendent, Office of Accountant-General, Bengal.		The Treasury	... ditto
2123	Dutt, K B	... Assistant, Framjee & Sons	...	11, Bentinck Street	... ditto
2124	Dutt, Kali Churn	... Assistant, McLeod & Co	...	31, Dalhousie Square	... ditto
*2125	Dutt, Kanai Lall	... Assistant, Office of Secretary to the Government of India, Finance and Commerce Departments.		Treasury Buildings	... ditto
2126	Dutt, Kush Chandra	... Assistant, G. F. Kellner & Co	...	32, Chowringhee	... ditto
2127	Dutt, Nafur Chunder	... Assistant, Office of Secretary to the Government of India, Finance and Commerce Department.		Treasury Buildings	... ditto
2128	Dutt, Nagendra Nath	... Clerk, J. G. Bagram & Co	...	14-2, Clive Row	... ditto
2129	Dutt, Narayan Chunder	... Assistant, G. Atherton & Co	...	14, Clive Street	... ditto
2130	Dutt, Nemye Chand	... Assistant, George Henderson & Co	...	100, Clive Street	... ditto
* 2131	Dutt, Netailal	... Assistant, Board of Revenue, L P	...	2, Bankshall Street	... ditto
2132	Dutt, Nibaran Chunder	... Merchant	...	Chorebagan	... ditto
2133	Dutt, Poolin Behary	... Assistant, Moran & Co	...	3, Mangoe Lane	... ditto
2134	Dutt, Roma Nath	... Assistant, Balmer, Lawrie & Co	...	103, Clive Street	... ditto
*2135	Dutt, Satish Chunder	... Assistant, Bengal Office, Municipal Department.		Writers' Buildings	... ditto

No.	Names.	Style or Calling.	Residence or place of business.	Religion.	Remarks.
	D				
2136	Dutt, Sham Chand ...	Despatcher, Bengal Coal Co, Ld ...	5, Fairlie Place ...	Hindu	
2137	Dutt, Shoshi Bhushan ...	Record-keeper, Audit Office, E I R	E I R House ...	ditto	
2138	Dutt, Surendro Nath ...	Clerk, Chartered Bank of India, Australia and China.	5, Council House Street ...	ditto	
2139	Dutt, Suree Chandra ...	Assistant, Apear & Co ...	19, Radha Bazar Street ...	ditto	
2140	Dutt, Suresh Chunder ...	Assistant, Board of Revenue, L P ...	2, Bankshall Street ...	ditto	
2141	Dutt, Toolsee Dass ...	Merchant ...	Colootolla ...	ditto	
2142	Dutt, Upendra Nath ...	Building Surveyor, District No. III	Municipal Office ...	ditto	
2143	Dwarka Pershad (Rai Sahib)	Supervisor, Military Works, Office of Commanding Royal Engineer, Presidency District.	Fort William ...	ditto	
	F				
*2144	Fateh Din ...	Clerk, Secretariat; Government of India, P W D.	Imperial Secretariat Buildings	Muhammadan	
2145	Framjee, R ...	Assistant, Framjee and Sons ...	11, Bentinck Street ...	Parsee	
*2146	Fazlul Kurim, Maulvi ...	Assistant, Bengal Office, Judicial, Political and Appointment Departments.	Writers' Buildings ...	Muhammadan	
	G				
2147	Gangooly, Amar Nath ...	3rd grade Accountant, Office of Examiner, Public Works Accounts, Bengal.	8, Lyons Range ...	Hindu	
2148	Gangooly, Aukhoy Kumar	4th Class Assistant, Office of Controller of Military Accounts, E. C., Supply and Transport Branch.	3, Koila Ghat Street ...	ditto	
2149	Gangooly, Bhagabutty Churn.	Sub-Engineer, Office of Executive Engineer, 2nd Calcutta Division.	Writers' Buildings ...	ditto	
2150	Gangooly, Dayamay ...	Assistant, Office of Secretary to the Government of India, Finance and Commerce Department.	Treasury Buildings ...	ditto	

2151	Gangooly, Debendro Nath...	Head Clerk, Meugens, King and Simson.	102, Clive Street	...	ditto
2152	Gangooly, Jogendranath ...	Clerk, Chartered Bank of India, Australia and China.	5, Council House Street	...	ditto
2153	Gangooly, Kali Kumar ...	Assistant to Director of Public Instruction, Bengal	Writers' Buildings	...	ditto
2154	Gangooly, Makhan Lall ...	Sub-Assessor, Municipal Office ...	Municipal Office	...	ditto
2155	Gangooly, Mohendro Nath	Clerk, Commercial Union Assurance Co, Ld.	29, Dalhousie Square	...	ditto
**2156	Gangooly, M L ...	Clerk, Foreign Office ...	Esplanade, West	...	ditto
2157	Gangooly, Nagendra Nath...	Sub-Assessor, Municipal Office ...	Municipal Office	...	ditto
2158	Gangooly, Priya Lal, B.A ...	1st Assistant, Office of Military Secretary to the Viceroy.	Government House	...	ditto
2159	Gangooly, Prosash Chunder	Gate Officer, Office of the Calcutta Port Commissioners.	Strand Road	...	ditto
**2160	Gangooly, Ramani Mohun	Clerk, Home Department ...	Home Department	...	ditto
2161	Gangooly, Sarat Chunder ..	Clerk, Gillanders, Arbuthnot & Co ...	8, Clive Street	..	ditto
2162	Gangooly, Surendra Nath...	4th class Assistant, Office of Controller of Military Accounts, E C, Supply and Transport Branch.	3, Koila Ghat Street	...	ditto
2163	Gholam Rahman, Shaikh ...	Supervisor, Office of Executive Engineer, 1st Calcutta Division.	Writers' Buildings	...	Muhammadan
2164	Ghosal, Nocool Chunder ...	4th class Assistant, Office of Controller of Military Accounts, E C, Supply and Transport Branch.	3, Koila Ghat Street	...	Hindu
2165	Ghosal, Radhikapodo ...	Assistant Accountant, Audit Department, E I R.	E I R House	...	ditto
* 2166	Ghosal, Raghunath ...	Clerk, Pelican and British Empire Life Office.	12, Dalhousie Square	...	ditto
2167	Ghosal, Sarat Kumar ...	Assistant Examiner, Office of Pay Examiner, Military Accounts Department, E C.	3, Koila Ghât Street	...	ditto
2168	Ghosal, Sat Cori ...	Clerk, Walter, Locke & Co, Ld ...	4, Esplanade	...	ditto
2169	Ghose, Abinash Chunder ...	Deputy Examiner, Office of Controller of Military Accounts, E C.	3, Koila Ghât Street	...	ditto

No.	Names.	Style or Calling.	Residence or place of business.	Religion.	Remarks.
	G				
2170	Ghose, Apoorva Krisno, M.A.	Head Assistant, Bengal Secretariat, Revenue Department.	Writers' Buildings ...	Hindu	
2171	Ghose, Ashutosh ...	Assistant, Nicholson & Co ...	14, Old Court House Lane ...	ditto	
2172	Ghose, Atul Krishna ...	Assistant, Board of Revenue, L P ...	2, Bankshall Street ...	ditto	
2173	Ghose, Avinash Chunder ...	Jeweller ...	169, Cornwallis Street ...	ditto	
2174	Ghose, Bama Charan ...	Treasurer, E I R ...	E I R House ...	ditto	
2175	Ghose, Bepin Behary ...	Assistant, Office of Inspector-General of Police, L P.	Writers' Buildings ...	ditto	
2176	Ghose, Charu Chunder ...	Assistant, Bengal Secretariat, Municipal Department.	Ditto ...	ditto	
2177	Ghose, Charu Chunder ...	Head Clerk, Registry Office ...	Ditto ...	ditto	
2178	Ghose, Chundy Churn ...	Assistant, Mackinnon, Mackenzie & Co	16, Strand ...	ditto	
2179	Ghose, Debendronath ...	Bullion Superintendent, Calcutta Mint	47, Strand Road, North ...	ditto	
2180	Ghose, Debendro Nath ...	Assistant, Government of India, Statistical Department.	7, Koila Ghat Street ...	ditto	
2181	Ghose, Gopal Chunder ...	Assistant, Bengal Secretariat, Public Works Department.	Writers' Buildings ...	ditto	
2182	Ghose, Gopal Chunder ...	Superintendent, Comptroller-General's Office.	The Treasury ...	ditto	
2183	Ghose, Gopeenath ...	Assistant Cashier and Cash-keeper, Bank of Bengal.	Strand ...	ditto	
2184	Ghose, Gynendra Nath ...	Head Clerk, Alliance Bank of Simla, Limited.	8, Council House Street ...	ditto	
2185	Ghose, Hari Churn ...	Clerk, Chief Engineer's Office, E I R	E I R House ...	ditto	
2186	Ghose, Haridas ...	Assistant, Harman & Co ...	12, Government Place ...	ditto	
2187	Ghose, Haridas ...	2nd Clerk, Arsenal Office ...	Fort William ...	ditto	
2188	Ghose, Heera Lall ...	Assistant, Mackinnon, Mackenzie & Co.	16, Strand ...	ditto	
2189	Ghose, Hem Chunder ...	Assistant, McLeod & Co ...	31, Dalhousie Square ...	ditto	
2190	Ghose, Hira Lall ...	Accountant, Martin & Co. ...	Jackson House ...	ditto	

2191	Ghose, Jogendro Narayan	Clerk, Ernsthausen, Ld ...	9, Clive Row	...	ditto
**2192	Ghose, Jyotish Chandra ...	Jr 4th Class Clerk, Lower Division, Office of Secretary to the Government of India, Military Department.	6, Esplanade, East	...	ditto
2193	Ghose, Kedar Nath ...	Cashier, Grand Hotel ...	16, Chowringhee	...	ditto
2194	Ghose, Khirode Chunder ...	Clerk, Audit Office, E I R ...	E I R House	...	ditto
2195	Ghose, Kiran Chunder ...	Partner, Dwarkin and Son ...	267, Bowbazar Street	...	ditto
**2196	Ghose, K L ...	Clerk, Foreign Office ...	Esplanade, West	...	ditto
2197	Ghose, Lall Behary ...	Assistant, Mackinnon, Mackenzie & Co.	16, Strand	...	ditto
**2198	Ghose, M L ...	Clerk, Foreign Office ...	Esplanade, West	...	ditto
2199	Ghose, Monmotho Nath ...	Assistant, Office of Private Secretary to the Viceroy.	6, Council House Street	...	ditto
2200	Ghose, Narain Chander ...	Assistant, Mackinnon, Mackenzie & Co	16, Strand	...	ditto
2201	Ghose, Nava Krishna, B.A.	Head Clerk, Office of Protector of Emigrants and Superintendent of Emigration.	55, Chowringhee Road	...	ditto
2202	Ghose, Nibaran Chunder ...	Head Clerk, Department of Land Records and Agriculture, Bengal.	Writers' Buildings	...	ditto
2203	Ghose, Nilprasanna ...	Accountant, Office of Government Examiner of Railway Accounts, P W D.	E I R House	...	ditto
2204	Ghose, Nogendro Kissen ...	Bullion Superintendent, Calcutta Mint.	47, Strand Road, North	..	ditto
2205	Ghose, Nogendra Nath ...	Accountant, James Simpson & Co, Ld	32-1, Dalhousie Square	...	ditto
2206	Ghose, Panchkari ...	Accountant, Office of Government Examiner of Railway Accounts, P W D.	E I R House	...	ditto
2207	Ghose, Priya Nath ...	Assistant, Office of Secretary to the Government of India, Finance and Commerce Department.	Treasury Buildings	...	ditto
2208	Ghose, Probode Chunder ...	Assistant, Finlay, Muir & Co ..	1, Clive Street	...	ditto
2209	Ghose, Prosunno Kali ...	Assistant, Board of Revenue, L P	2, Bankshall Street	...	ditto
2210	Ghose, Radhanath ...	Draftsman, Jessop & Co, Ld ...	93, Clive Street	...	ditto

No.	Names	Style or Calling.	Residence or place of business.	Religion	Remarks.
	G				
2211	Ghose, Rajendra Nath ...	Assistant, Board of Revenue, L P	2, Bankshall Street ...	Hindu	
2212	Ghose, Rajendro Lall ...	Clerk, Calcutta Mint ...	47, Strand Road, North ...	ditto	
2213	Ghose, Ramoni Mohun ...	Head Clerk, Office of Inspector-General of Registration, Bengal.	Writers' Buildings ..	ditto	
2214	Ghose, Ram Taran ...	Clerk, Gillanders, Arbuthnot & Co	8, Clive Street ...	ditto	
2215	Ghose, Roma Prosunno ...	Superintendent, Comptroller-General's Office.	The Treasury ...	ditto	
2216	Ghose, Rusick Lall ...	Assistant, Bengal Secretariat, P W D	Writers' Buildings ...	ditto	
2217	Ghose, Sadanunda ...	Head Examiner, Audit Office, E I R	E I R House ...	ditto	
2218	Ghose, Sasi Bhushon ...	Assistant Superintendent, Accountant-General's Office, Bengal.	The Treasury ...	ditto	
2219	Ghose, S B ...	Assistant Analyst, Municipal Office ..	7, Sudder Street ...	ditto	
2220	Ghose, S C ...	Assistant Traffic Manager, E I R ...	E I R House ...	ditto	
2221	Ghose, Shoshee Bhoosan ...	Assistant, Blackwood, Blackwood & Co.	12, Clive Street ...	ditto	
2222	Ghose, Soshi Bhoosan ...	Head Clerk, Standard Oil Company of New York.	8, Dalhousie Square, East ...	ditto	
2223	Ghose, Shyma Churn ...	Assistant Superintendent, Accountant-General's Office, Bengal.	The Treasury ...	ditto	
2224	Ghose, Sita Nath	Cashier and Book-keeper, Geo Beaver & Co.	8-1, Dalhousie Square, East ...	ditto	
2225	Ghose, Siva Nath ...	Merchant ...	85, Beohu Chatterjee's Street	ditto	
2226	Ghose, S N ...	Assistant, Sailessur & Co ...	132, Canning Street ...	ditto	
2227	Ghose, Srikali ...	Partner, Ghosh, Mitter & Co ...	2-4, Radha Bazar Lane ...	ditto	
2228	Ghose, Sris Chunder ...	Assistant Superintendent, Accountant-General's Office, Bengal.	The Treasury ...	ditto	
2229	Ghose, Surendra Nath, B A.	Assistant, Bengal Secretariat, General and Revenue Departments	Writers' Buildings ...	ditto	

2230	Ghose, Surendra Nath ...	Assistant, British American Tobacco Company, Ld	95, Clive Street ...		ditto
2231	Ghose, Suresh Chunder ...	Clerk, Ullmann, Hirschhorn & Co ...	14, Radha Bazar Lane ...		ditto
2232	Ghose, Suttya Kumar ...	Assistant, Office of Secretary to the Government of Bengal, P W D	Writers' Buildings ...		ditto
2233	Ghose, Tarapado ...	Assistant, Office of Secretary to the Government of India, Finance and Commerce Department.	Treasury Buildings ...		ditto
*2234	Ghose, Taraprasad ...	Jr. 4th class Clerk, Lower Division, Office of Secretary to the Government of India, Military Department.	6, Esplanade, East ...		ditto
2235	Ghose, T K ...	Sanitary Inspector, District No. III, Municipal Office.	Municipal Office ...		ditto
2236	Ghose, Umes Chunder ...	Clerk, Office of Comptroller-General and Comptroller, India Treasuries.	The Treasury ...		ditto
2237	Ghose, Upendra Nath ..	Accounts Clerk, Agent and Chief Engineer's Office, B C R.	159-1, Bow Bazar Street ...		ditto
2238	Ghose, Upendra Nath ...	Assistant, Macneill & Co ...	2, Clive Ghat Street ...		ditto
2239	Ghose, Wooma Charan ...	Assistant, David Sassoon & Co, Ld ...	3, Fairlie Place ...		ditto
2240	Ghose, Woomesh Chunder	Clerk, Office of Pay Examiner, Military Accounts Department, E C.	3, Koila Ghat Street ...		ditto
*2241	Girdhari Lall ...	Clerk, Office of Accountant-General, P W D.	Imperial Secretariat Buildings		ditto
2242	Gorgori, Ram Das ...	Assistant, Bengal Secretariat, Municipal Department.	Writers' Buildings ...		ditto
2243	Gosamy, Purna Chandra, M.A.	Professor, Ripon College ...	60, Mirzapore Street ...		ditto
2244	Guha, N B ...	Cashier, W Leslie & Co ...	2, Chowringhee ...		ditto
2245	Gupté, B A ...	Personal Assistant to the Director of Ethnography for India.	Home Department ...		ditto
*2246	Gupto, Amulya Nath ...	7th Class Clerk, Secretariat, Government of India, P W D.	Imperial Secretariat Buildings		ditto

No.	Names.	Style or Calling.	Residence or place of business.	Religion.	Remarks.
	G.				
2247	Gupto, Bata Krishna ...	Book-keeper, Calcutta Landing and Shipping Company, Ld.	24, Strand ...	Hindu	
2248	Gupto, Bepin Behary ...	Assistant, Government of India, Statistical Department.	7, Koila Ghat Street ...	ditto	
2249	Gupto, Bepin Behary ...	Clerk, Office of Pay Examiner, Military Accounts Department, E C	3, Koila Ghat Street ...	ditto	
*2250	Gupto, Brojendro Mohun, B.A.	Head Assistant, Bengal Office, Judicial, Political and Appointment Departments.	Writers' Buildings ...	ditto	
2251	Gupto, Gopal Chunder ...	Clerk, National Bank of India, Ld ...	104, Clive Street ...	ditto	
2252	Gupto, Hari Charan ...	Head Assistant and Cashier, Board of Examiner's Office.	26, Mangoe Lane ...	ditto	
*2253	Gupto, Hari Das ...	Accountant, 1st grade, Office of Accountant-General, Military Department.	6, Esplanade Row, East ...	ditto	
2254	Gupto, Hari Pado ...	Chief Clerk, Assistant Traffic Superintendent's office, B C R.	159-1, Bow Bazar Street ...	ditto	
2255	Gupto, Jogendra Nath ...	Head Assistant, Bengal Office, Judicial, Political and Appointment Departments.	Writers' Buildings ...	ditto	
2256	Gupto, Khagendra Nath ...	Assistant, Army and Navy Co-Operative Society, Ld.	41, Chowringhee ...	ditto	
*2257	Gupto, Narain Chunder ...	1st class Clerk, Office of Accountant-General, Military Department.	6, Esplanade Row, East ...	ditto	
2258	Gupto, Pulin Behari ...	Clerk, Chief Engineer's Office, E I R	E I R House ...	ditto	
2259	Gupto, Sita Nath ...	Assistant, R C Gupta & Sons ...	81, Clive Street ...	ditto	
2260	Gupto, Surendra Nath ...	License Inspector ...	Municipal Office ...	ditto	
2261	Gupto, Syama Churn, B.A. ...	Head Master, Bethune Collegiate School.	181, Cornwallis Street ...	Brahmo	
*2262	Gupto, Uma Churn ...	3rd Class Assistant, Office of Accountant-General, Military Department.	6, Esplanade Row, East ...	Hindu	
2263	Halder, Girija Bhusan ...	Inspector, Collector's Department ...	Municipal Office ...	ditto	
2264	Halder, Gour Chunder ...	Clerk, Comptroller-General's Office ...	The Treasury ...	ditto	

2265	Halder, Peary Mohan ...	Head Clerk, Assessor's Department ..	Municipal Office	...	ditto
2266	Halder, Priya Nath ...	Assistant, Board of Revenue, L P ...	2, Bankshall Street	...	ditto
2267	Halder, Wooma Churn ...	Head Assistant, Account Department, Office of the Calcutta Port Commissioners.	Strand Road	...	ditto
*2268	Hari Sankar ...	Junior 5th Class Clerk, Lower Division, Office of Secretary to the Government of India, Military Department.	6, Esplanade, East	...	ditto
	I				
2269	Islam, Maulvi Mahomed ...	License Inspector ...	Municipal Office	...	Muhammadan
2270	Ismut Ali, Munshi ...	Offg. Deputy Superintendent, Presidency Jail Press.	Presidency Jail Press	...	ditto
	J				
2271	Jafari, Maulvi Mahamud Yusuf.	Head Maulvi, Board of Examiner's Office.	26, Mangoe Lane	...	ditto
2272	Jha, Pandit Basti Ram ...	Accountant, Allahabad Bank, Ld ...	101-1, Clive Street	...	Hindu
	K				
*2273	Kaisth, Hari Sankar ...	Junior 5th class Clerk, Lower Division, Office of Secretary to the Government of India, Military Department.	6, Esplanade, East	...	ditto
*2274	Kanhya Lall (I) ...	7th Class Clerk, Secretariat, Government of India, P W D.	Imperial Secretariat Buildings		ditto
2275	Karadkar, Mahadeo Rudrappa.	Accountant, Office of Examiner of Ordnance Factory Accounts in India.	1, Koila Ghat Street	...	ditto
2276	Karmokar, Prolad Chunder	Assistant Master, Calcutta Institution	198, Bow Bazar Street	...	ditto
2277	Ker, Preo Nath ...	Assistant, Government of India, Statistical Department.	7, Koila Ghat Street	...	ditto
2278	Kerr, Koylash Nath ...	Assistant, Office of Secretary to the Government of Bengal, P W D.	Writers' Buildings	...	ditto
2279	Kessowjee, Jeena ...	Assistant, British-American Tobacco Company, Ld.	95, Clive Street	...	ditto
*2280	Khan, Mahammad Hasan	Assistant, Office of Secretary to the Government of India, Finance and Commerce Department.	Treasury Buildings	...	Muhammadan

No	Names.	Style or Calling.	Residence or place of business.	Religion.	Remarks.
	H				
*2281	Koar, Abinash Chunder ...	Clerk, Home Department ...	Home Department ...	Hindu	
2282	Koar, Kailas Chunder ...	Assistant, Bengal Secretariat, Accounts Department.	Writers' Buildings ...	ditto	
2283	Komar, A P ...	Sanitary Inspector, District No. I, Municipal Office.	79, Cornwallis Street ...	ditto	
2284	Kumar, Ashu Tosh ...	Manager, Jail Depôt ...	5, Hastings Street ...	ditto	
2285	Kundu, Abinash Chandra ...	Dealer in Firearms and Medicines ...	10, Chandney Choke Street ...	ditto	
2286	Kundu, J ...	Sanitary Inspector, District No. I, Municipal Office.	79, Cornwallis Street ...	ditto	
2287	Kundu, Peary Bhusan ...	Draftsman, Chief Engineer's Office, E I R	E I R House ...	ditto	
2288	Kur, Ashu Tosh ...	Clerk, Surveyor-General's Office, Correspondence Branch.	13, Wood Street ...	ditto	
2289	Kur, Gopal Krishna ...	Accountant, Office of Controller of Military Accounts, E C, Accounts Branch.	3, Koila Ghat Street ...	ditto	
	L				
2290	Laha, Harry Dass ...	Assistant, Allen Brothers & Co ...	1, New China Bazar Street ...	ditto	
2291	Laha, Kenai Lall ...	Assistant, F W Heilgers & Co ...	136, Canning Street ...	ditto	
2292	Lahoory, Hem Chunder ...	Assistant, Mackinnon, Mackenzie & Co.	16, Strand ...	ditto	
2293	Lahoory, Janendra Bhusan	Assistant, Board of Revenue, L P ...	2, Bankshall Street ...	ditto	
2294	Lahoory, P C ...	Food Inspector, District Health Officer's Department, District No. I.	79, Cornwallis Street ...	ditto	
2295	Lahoory, Kedar Nath ...	Assistant, Begg, Dunlop & Co ...	12, Mission Row ...	ditto	
*2296	Lahoory, Srish Chunder ...	4th class Clerk, Secretariat, Government of India, P W D.	Imperial Secretariat Buildings	ditto	
2297	Lohia, Budridas ...	Under-broker, Anderson, Wright & Co.	90, Cross Street ...	ditto	

2298	Madho Prasad	...	Bill Examiner, Bank of Bengal	...	Strand	... ditto
2299	Mahamed Amjad	...	Assistant, Board of Revenue, L P	...	2, Bankshall Street	... Muhammadan
*2300	Mahamed Hossein	...	6th class clerk, Secretariat, Government of India, P W D.		Imperial Secretariat Buildings	ditto
*2301	Maharaj	...	7th class clerk, Secretariat, Government of India, P W D.		Ditto	... Hindu
2302	Mahmud		Officiating Head Master, Calcutta Madrassa.		Calcutta Madrassa	... Muhammadan
2303	Maneckjee, Byramjee	...	Manager, Framjee & Sons	...	11, Bentinck Street	... Parsee
2304	Mauhk, Kali Chand	...	Junior 5th class clerk, Lower Division, Office of Secretary to the Government of India, Military Department.		6, Esplanade, East	... Hindu
2305	Mehta, D H	...	Assistant, K E Heynemann	...	4, Lyons Range	... Zoroastrian
2306	Mehta, D R	...	Assistant, Commercial Bank of India, Ld.		5-1, Fairlie Place	... Parsee
2307	Misser, Gopee Nath	...	Gopee Nath Misser & Co	...	132, Cotton Street	... Hindu
2308	Misra, Bata Krishna	...	2nd clerk, Agent and Chief Engineer's Office, B C R.		159-1, Bow Bazar Street	... ditto
2309	Mitter, Akhoi Kumar	...	3rd class Assistant, Office of Controller of Military Accounts, E C, Supply and Transport Branch.		3, Koila Ghât Street	... ditto
2310	Mitter, Akhoi Kumar	...	3rd class Assistant, Office of Controller of Military Accounts, E C, Supply and Transport Branch.		1, 2 & 3, Koila Ghât Street	... ditto
2311	Mitter, Amrita Lal	...	Inspector, Collector's Department, Municipal Office.		Municipal Office	... ditto
2312	Mitter, Ashutosh	...	Professor, Metropolitan Institution	...	Sunker Ghose's Lane, Bar Simla.	ditto
2313	Mitter, Ashutosh	...	Clerk, Office of Pay Examiner, Military Accounts Department, E C.		3, Koila Ghât Street	... ditto
2314	Mitter, Ashutosh	...	Assistant, Board of Revenue, L. P.		2, Bankshall Street	... ditto
2315	Mitter, Bepin Behary	...	Assistant, Bengal Secretariat, Municipal Department.		Writers' Buildings	... ditto
2316	Mitter, Bepin Behary	...	Assistant, Burk Brothers	...	2 & 4, Petter's Lane	... ditto
2317	Mitter, Bepin Behary	...	Landholder	...	Shambazar	... ditto
2318	Mitter, Bhola Nath	...	Assistant, J Thomas & Co	...	8, Mission Row	... ditto

No.	Names	Style or Calling.	Residence or place of business.	Religion.	Remarks.
	M				
2319	Mitter, Bhupendra Nath ...	Superintendent, Comptroller-General's Office.	The Treasury ...	Hindu.	
2320	Mitter, Brojendra Chandra	Head Assistant, Stamp Department Calcutta Collectorate.	3, Charnock Place ...	ditto	
2321	Mitter, C C (Rai Sahib) ...	Clerk, Foreign Office ...	Esplanade, West ...	ditto	
2322	Mitter, Charu Chunder ...	License Inspector ...	Municipal Office ...	ditto	
2323	Mitter, Chuni Lall ...	Inspector, Suburban Drainage Department, Municipal Office.	4, Corporation Street ...	ditto	
2324	Mitter, Doorga Das ...	Inhabitant ...	20, Ghose's Lane, Simla ...	ditto	
2325	Mitter, Geereendro Nath ...	Accountant, North British and Mercantile Insurance Office.	100, Clive Street ...	ditto	
2326	Mitter, Girish Chunder ...	Assistant, Graham & Co ...	9, Clive Street ...	ditto	
2327	Mitter, Hira Lal ...	Partner, J & N Bhuttacharjee & Co	77, Harrison Road ...	ditto	
2328	Mitter, Hira Lal ...	Clerk, Office of Comptroller-General and Comptroller, India Treasuries.	The Treasury ...	ditto	
2329	Mitter, Horo Nath ...	Clerk, Office of Controller of Military Accounts, Accounts Branch, E C.	3, Koila Ghât Street ...	ditto	
2330	Mitter, Hurree Madhub ...	Assistant Accountant, Chief Supply and Transport Office, Presidency District.	5, Strand ...	ditto	
2331	Mitter, Hurry Churn ...	Superintendent, Training Academy	Simla Street ...	ditto	
2332	Mitter, J C ...	Partner, Sailessur & Co ...	132, Canning Street ...	ditto	
2333	Mitter, Jnanendra Nath ...	Assistant, Bengal Secretariat, Financial Department.	Writers' Buildings ...	ditto	
2334	Mitter, Kally Charan ...	Clerk, Walter, Locke & Co, Ld ...	4, Esplanade ...	ditto	
2335	Mitter, Kally Charan ...	Clerk, Ullmann, Hirschhorn & Co. ...	14, Radha Bazar Lane ...	ditto	
2336	Mitter, Kally Nath ...	Assistant, G E Hotel Co, Ld ...	1, 2 & 3, Old Court House Street.	ditto	
2337	Mitter, Kissory Lal ...	4th class Assistant, Office of Controller of Military Accounts, E C, Supply and Transport Branch.	3, Koila Ghât Street ...	ditto	
2338	Mitter, Kissorimohun ...	Assistant, Board of Revenue, L P ...	2, Bankshall Street ...	ditto	
2339	Mitter, Koylash Chunder ...	Assistant, Graham & Co ...	9, Clive Street ...	ditto	
2340	Mitter, Krishna Kumar ...	Inhabitant ...	Rajendranath Sen's Lane, Kassaripara.	ditto	

2341	Mitter, Lolit Chunder ...	License Inspector, Municipal Office ...	Municipal Office ...	ditto
2342	Mitter, Moti Lall ...	Partner, Abbott, Mitter & Co ...	14, Old Court House Lane ...	ditto
2343	Mitter Moty Lall ...	Assistant, O. Steel & Co ...	14, Old Court House Street ..	ditto
**2344	Mitter, Narasingha Prosad	Assistant, Office of Secretary to the Government of India, Department of Finance and Commerce.	Treasury Buildings ...	ditto
**2345	Mitter, Narendra Krishna	Clerk, Office of Accountant-General, Military Department.	6, Esplanade Row, East ...	ditto
2346	Mitter, Narendra Krishna...	Accountant, Bengal Chamber of Commerce.	2, Clive Street ...	ditto
**2347	Mitter, Opendro Kissen ...	Assistant Examiner, 1st grade, Office of Accountant-General, Military Department.	6, Esplanade Row, East ...	ditto
2348	Mitter, Panna Lal ...	Assistant, O. Steel & Co ...	14, Old Court House Street ...	ditto
2349	Mitter, P C ...	Sanitary Inspector, District No. I, Municipal Office.	79, Cornwallis Street ...	ditto
2350	Mitter, Raj Coomar ...	Assistant, Cutler, Palmer & Co ...	1, Hastings Street ...	ditto
2351	Mitter, Raj Rajessur ...	Partner, Ghosh, Mitter & Co ...	2-4, Radha Bazar Lane ...	ditto
**2352	Mitter, Ram Chunder ...	Clerk, Home Department ...	Home Department ...	ditto
2353	Mitter, Rasamoy ...	Head Master, Hindu School ...	College Square ...	ditto
2354	Mitter, Sarat Chunder ..	Accountant, Office of Government Examiner of Railway Accounts, P W D.	E I R House ...	ditto
2355	Mitter, Sarat Chunder ...	Assistant, Bengal Office, Judicial, Political and Appointment Departments.	Writers' Buildings ...	ditto
2356	Mitter, Sarat Chunder ...	4th grade clerk, Office of Examiner of Ordnance Factory Accounts in India.	1, Koila Ghât Street ...	ditto
2357	Mitter, Saroda Churn ...	Supervisor, Office of Executive Engineer, 1st Calcutta Division.	Writers' Buildings ...	ditto
2358	Mitter, Saroda Prosad ...	Store-keeper, Grand Hotel ...	16, Chowringhee ...	ditto
2359	Mitter, Satindra Nath ...	Inspector, Collector's Department ...	Municipal Office ...	ditto

No.	Name	Style or Calling.	Residence or place of business.	Religion.	Remarks.
	M				
2360	Mitter, S C ...	Supervisor, District Engineer's Office, District No 1.	79, Cornwallis Street ...	Hindu	
**2361	Mitter, Srish Chandra ..	2nd class Senior clerk, Upper Division, Office of Secretary to the Government of India, Military Department.	6, Esplanade, East ...	ditto	
2362	Mitter, Srish Chandra ...	Bustee Assessor ...	Municipal Office ...	ditto	
2363	Mitter, Srish Chandra ...	Superintendent, Comptroller-General's Office.	The Treasury ...	ditto	
2364	Mitter, Uma Charan ...	Head Clerk, Book Section, Account Department.	Municipal Office ...	ditto	
2365	Mitter, U N ...	Food Inspector, District No. II, Municipal Office.	ditto ...	ditto	
**2366	Mitter, Upendra Mohan, B.A.	Assistant, Bengal Secretariat, Judicial, Political and Appointment Departments.	Writers' Buildings ...	ditto	
2367	Mitty, N L ...	Assistant, F W Howse & Co ...	3, Lall Bazar	ditto	
2368	Mughal Jan, Munshi ...	Engraver, Engraving Department, Surveyor-General's Office.	13, Wood Street ...	Muhammadan	
2369	Moghe, Ram Chundra Daji	Accountant, Office of Examiner of Ordnance Factory Accounts in India.	1, Koila Ghât Street ...	Hindu	
**2370	Mookerjee, Abhoy Churn ...	Superintendent, Office of Secretary to the Government of India, Finance and Commerce Departments.	Treasury Buildings ...	ditto	
**2371	Mookerjee, Aghorenath ...	Clerk, Home Department ...	Home Department ...	ditto	
2372	Mookerjee, Akhoy Coomar	Assistant, Mackinnon, Mackenzie & Co	16, Strand ...	ditto	
2373	Mookerjee, Amrita Lall ...	3rd clerk, Arsenal Office ...	Fort William ...	ditto	
2374	Mookerjee, Annoda Churn	Assistant, Bengal Secretariat, General and Revenue Departments.	Writers' Buildings ...	ditto	
2375	Mookerjee, A T ..	Sanitary Inspector, District No. II, Municipal Office.	Municipal Office ...	ditto	

2376	Mookerjee, Ausotosh ...	Assistant, David Sassoon & Co, Ld ...	3, Fairlie Place ...	ditto
2377	Mookerjee, Bamapodo ...	Assistant, Williamson, Magor & Co	4, Mangoe Lane ...	ditto
2378	Mookerjee, Benode Behary	Accountant, Office of Controller of Military Accounts, Accounts Branch, E C.	3, Koila Ghât Street ...	ditto
2379	Mookerjee, Bepin Behary...	Assistant, Board of Revenue, L P ...	2, Bankshall Street ...	ditto
2380	Mookerjee, Bepin Behary...	Assistant, Halford, Smith & Co ...	1, Mission Row ...	ditto
2381	Mookerjee, Bepin Behary...	Storekeeper of Stationery, Office of the Superintendent of Stamps and Stationery.	4 & 5, Church Lane ...	ditto
2382	Mookerjee, Bhoot Nath ...	Firm of T C Mookerjee & Co ...	33-1, Beadon Street ...	ditto
2383	Mookerjee, Bhupati ...	Clerk, Walter, Locke & Co, Ld ...	4, Esplanade ...	ditto
2384	Mookerjee, Bidhu Bhushan	First Assistant to Bengali Translator to the Government of Bengal.	Writers' Buildings ...	ditto
2385	Mookerjee, Boidya Nath ...	Proprietor, B N Mookerjee & Co ...	7, Swallow Lane ...	ditto
2386	Mookerjee, Brindabun Chunder.	Assistant, Office of Examiner of Ordnance and Army Clothing Branches.	Military Accounts Department Buildings, Koila Ghât.	ditto
2387	Mookerjee, Dakhina Ranjan	Assistant Engineer, Circular and Eastern Canals Division.	Writers' Buildings ...	ditto
2388	Mookerjee, Debendro Nath	7th class clerk, Secretariat, Government of India, P W D.	Imperial Secretariat Buildings	ditto
2389	Mookerjee, Debendra Nath	Assistant, Office of Secretary to the Government of India, Finance and Commerce Department.	Treasury Buildings ...	ditto
2390	Mookerjee, Denonath ...	Assistant, Office of Commissioner of Excise & Salt, Bengal.	2, Bankshall Street ...	ditto
2391	Mookerjee, Din Doyal ...	Assistant, Harman & Co ...	12, Government Place ...	ditto
2392	Mookerjee, Doyal Kissen ...	Assistant, F Harley & Co ...	10, Lall Bazar ...	ditto
2393	Mookerjee, Gooroo Prosanna	Assistant, Carritt, Moran & Co ...	9, Mission Row ...	ditto
2394	Mookerjee, Gopal Chunder	Assistant Superintendent, Accountant-General's Office, Bengal.	The Treasury ...	ditto
2395	Mookerjee, Haran Chunder	Clerk, Royal Insurance Co ...	26-27, Dalhousie Square ...	ditto
2396	Mookerjee, Hari Dass ...	Clerk, Chartered Bank of India, Australia & China.	5, Council House Street ...	ditto

No.	Names.	Style or Calling.	Residence or place of business.	Religion.	Remarks.
	M				
2397	Mookerjee, Haridhan ...	Estimator, Office of Executive Engineer, 1st Calcutta Division.	Writers' Buildings ...	Hindu	
2398	Mookerjee, Hari Nath ...	Assistant, H D Cartwright & Co ...	13, Clive Street ...	ditto	
2399	Mookerjee, Hari Prasanna, B.A.	Assistant, Bengal Secretariat, General and Revenue Departments.	Writers' Buildings ...	ditto	
2400	Mookerjee, Hari Sadhan ...	Assistant Superintendent, Accountant-General's Office, Bengal.	The Treasury ...	ditto	
2401	Mookerjee, Hem Chunder ...	Assistant, James Murray & Co ...	12, Government Place ...	ditto	
*2402	Mookerjee, Hem Chunder, B.A.	Assistant, Bengal Office, Judicial, Political and Appointment Departments.	Writers' Buildings ...	ditto	
*2403	Mookerjee, Hira Lal ...	7th class clerk, Secretariat, Government of India, P W D	Imperial Secretariat Buildings	ditto	
2404	Mookerjee, Hira Lal ...	Assistant to Director of Public Instruction, Bengal.	Writers' Buildings ...	ditto	
2405	Mookerjee, Hurry Dass ...	Assistant, Shaw, Wallace & Co ...	20, Strand Road ...	ditto	
2406	Mookerjee, Hurry Hur ...	3rd grade Accountant, Office of Controller of Military Accounts, E C.	3, Koila Ghât Street ...	ditto	
2407	Mookerjee, H M ...	General Record Assistant, Office of Secretary to the Government of India, Revenue and Agricultural Department.	Imperial Secretariat Buildings	ditto	
*2408	Mookerjee, Iswara Chandra	Clerk, Office of Accountant-General, P W D.	Ditto ...	ditto	
2409	Mookerjee, Jamini Kanto ...	Assistant, Board of Revenue, L P ...	2, Bankshall Street ...	ditto	
2410	Mookerjee, Janoki Nath ...	Draftsman, Chief Engineer's Office, E I R.	E I R House ...	ditto	
2411	Mookerjee, Jogendra Nath	Clerk, Ullmann, Hirschhorn & Co ...	14, Radha Bazar Lane ...	ditto	
2412	Mookerjee, Jogendra Nath	Head Clerk, Wards Department, Presidency Commissioner's Office.	3, Charnock Place ...	ditto	
2413	Mookerjee, Jogesh Chunder	Sub-Assistant Auditor, E I R ...	E I R House ...	ditto	

2414	Mookerjee, Jotindra Nath ...	Assistant, Bengal Secretariat, Financial Department.	Writers' Buildings ...	ditto
2415	Mookerjee, K ...	Sanitary Inspector, District No. III, Municipal Office.	7, Sudder Street ...	Theist
2416	Mookerjee, Kally Gopal ...	3rd grade Accountant, Office of Examiner, Public Works Accounts, Bengal.	8, Lyons Range ...	Hindu
2417	Mookerjee, Kedarnath ...	Accountant, 1st grade, Office of Examiner of Ordnance and Army Clothing Branches.	Military Accounts Department Buildings, Koila Ghât Street.	ditto
2418	Mookerjee, Kedar Nath ...	4th class Assistant, Office of Controller of Military Accounts, E C, Supply and Transport Branch.	3, Koila Ghât Street ...	ditto
2419	Mookerjee, Kedar Nath ...	Clerk, Office of Comptroller-General and Comptroller, India Treasuries.	The Treasury ...	ditto
2420	Mookerjee, Keerty Chunder	Clerk, Chartered Bank of India, Australia & China.	5, Council House Street ...	ditto
2421	Mookerjee, Kisto Nath ...	Assistant, Macneill & Co ...	2, Clive Ghât Street ...	ditto
2422	Mookerjee, K K ...	Assistant, David Sassoon & Co, Ld ...	3, Fairlie Place ...	ditto
2423	Mookerjee, Koylash Chunder	Assistant, Macneill & Co ...	2, Clive Ghât Street ...	ditto
2424	Mookerjee, Kristodhone ...	Assistant, Office of Inspector-General of Police, L P.	Writers' Buildings ...	ditto
2425	Mookerjee, Kumud Bundhoo	Assistant, Bengal Secretariat, P W D	Ditto ...	ditto
*2426	Mookerjee, Kumud Chunder	6th class clerk, Office of Secretary to the Government of India, Public Works Department.	Imperial Secretariat Buildings	ditto
2427	Mookerjee, Lal Mohun ...	Cashier, Royal Insurance Co ...	26-27, Dalhousie Square ...	ditto
*2428	Mookerjee, Mahendra Nath	Junior 4th class clerk, Lower Division, Office of Secretary to the Government of India, Military Department.	6, Esplanade, East ...	ditto
2429	Mookerjee, Mohendra Nath	Clerk, Comptroller-General's Office ...	The Treasury ...	ditto
2430	Mookerjee, Makhun Lall ...	Deputy Stamp Store-keeper, Office of Superintendent of Stamps and Stationery.	4 and 5, Church Lane ...	ditto
2431	Mookerjee, Makhun Lall ...	Store-keeper, Grindlay & Co ...	11, Hastings Street ...	ditto

No	Names.	Style or Calling.	Residence or place of business.	Religion.	Remarks.
	M				
2432	Mookerjee, Mohun Lall ...	Accountant, Bengal Secretariat, Financial, Municipal and Accounts Departments.	Writers' Buildings ...	Hindu	
2433	Mookerjee, Monmotho Nath	Partner, A J Bolton & Co ...	32, Jackson Ghât Street ...	ditto	
2434	Mookerjee, Monomohun ...	Head Clerk, Arsenal Office ...	Fort William ...	ditto	
2435	Mookerjee, Narayan Chunder, B.A.	Assistant Head Master, Hare School	College Square ...	ditto	
2436	Mookerjee, Nebaran Chunder.	4th grade Clerk, Office of Examiner of Ordnance Factory Accounts in India.	1, Koila Ghât Street ...	ditto	
2437	Mookerjee, Nikhil Ranjan...	Assessor of Income-tax ...	3, Charnock Place ...	ditto	
2438	Mookerjee, Norendra Nath	Clerk, Surveyor-General's Office, Correspondence Branch.	13, Wood Street ...	ditto	
2439	Mookerjee, Okhil Nath ...	Assistant Statistical Supervisor, General Traffic Manager's Office, E I R.	E I R House ...	ditto	
2440	Mookerjee, Onookul Chunder	Cashier, Office of Superintendent, Government Printing, India.	8, Hastings Street ...	ditto	
2441	Mookerjee, Panchoowrie ...	Assistant Accountant, B C R ...	159, Bow Bazar Street ...	ditto	
2442	Mookerjee, P K ...	Treasurer, Municipal Office ...	Municipal Office ...	ditto	
2443	Mookerjee, P N ...	Sanitary Inspector, District No II, Municipal Office.	Municipal Office ...	ditto	
2444	Mookerjee, Prankissen ...	Clerk, Office of Controller of Military Accounts, Accounts Branch, E C.	3, Koila Ghât Street ...	ditto	
2445	Mookerjee, Punchanon ...	Assistant, Mackinnon, Mackenzie & Co.	16, Strand ...	ditto	
2446	Mookerjee, Rajendra Chunder.	Clerk, Comptroller-General's Office ...	The Treasury ...	ditto	
2447	Mookerjee, Rajendro Nath	Jr. 3rd class clerk, Lower Division, Office of Secretary to the Government of India, Military Department.	6, Esplanade, East ...	ditto	

2448	Mookerjee, Rajkumar ...	Assistant, Barry & Co. ...	5, Lyons Range ...	ditto
2449	Mookerjee, Rakhal Chunder	License Inspector, Municipal Office ...	Municipal Office ...	ditto
**2450	Mookerjee, Ram Chunder...	Accountant, Accountant-General's Office, P W D.	Imperial Secretariat Buildings	ditto
2451	Mookerjee, Ram Chunder...	Partner, A J Bolton & Co ...	32, Jackson Ghât Street ...	ditto
2452	Mookerjee, Rameshur ...	Assistant, Board of Revenue, L P ...	2, Bankshall Street ...	ditto
**2453	Mookerjee, R N ...	Assistant, Office of Secretary to the Government of India, Revenue and Agricultural Department, General Branch.	Imperial Secretariat Buildings	ditto
2454	Mookerjee, Sagor Lal ...	Clerk, Office of Comptroller-General and Comptroller, India Treasuries.	The Treasury ...	ditto
2455	Mookerjee, Sarat Chunder	General Assistant to Secretary, Municipal Office.	Municipal Office ...	ditto
2456	Mookerjee, Sasadhar ...	Assistant, R C Gupta & sons ...	81, Clive Street ...	ditto
2457	Mookerjee, Sasanka Mohan	Assistant, Office of Commissioner of Excise and Salt, Bengal.	2, Bankshall Street ...	ditto
2458	Mookerjee, Sati Ranjan ...	License Inspector ...	Municipal Office ...	ditto
2459	Mookerjee, Shoshebhooson	Inhabitant ...	Jorasanko ...	ditto
2460	Mookerjee, Sree Nath ...	Assistant, Mackinnon, Mackenzie & Co.	16, Strand ...	ditto
2461	Mookerjee, Sre Narain ...	Diary-keeper, Government Printing Office, India.	8, Hastings Street ...	ditto
2462	Mookerjee, Srish Chunder ...	Assistant, Moll, Schutte & Co ...	1, Lall Bazar Street ...	ditto
2463	Mookerjee, Tarapodo ...	Assistant, Bengal Secretariat, General and Revenue Departments.	Writers' Buildings ...	ditto
2464	Mookerjee, Thacoor Das ...	Assistant, Mackinnon, Mackenzie & Co.	16, Strand ...	ditto
2465	Mookerjee, Umbica Churn...	Assistant Litho. Printer, Surveyor-General's Office.	14, Wood Street ...	ditto
2466	Mookerjee, Upendra Nath...	Assistant, Office of Secretary to the Government of India, Finance and Commerce Department.	Treasury Buildings ...	ditto

No.	Names.	Style or Calling.	Residence or place of business.	Religion	Remarks.
	M				
2467	Moytro, Banamali ...	Clerk, Medical College ...	College Street ...	Hindu	
2468	Moytro, Hari Das ...	Inspector, Collector's Department ...	Municipal Office ...	ditto	
2469	Moytro, Jadu Nath ...	Accountant, Andrew Yule & Co ...	7, Clive Row ...	ditto	
2470	Mozoomdar, Anooja Churn	Clerk, Office of Examiner, Public Works Accounts, Bengal.	8, Lyons Range ...	ditto	
2471	Mozoomdar, Ashootosh ...	Assistant, Board of Revenue, L P ...	2, Bankshall Street ...	ditto	
2472	Mozoomdar, Behary Lall ...	Clerk, Grindlay & Co ...	11, Hastings Street ...	ditto	
2473	Mozoomdar, Broja Syam ...	Assistant to Director of Public Instruction, Bengal.	Writers' Buildings ...	ditto	
2474	Mozumdar, Hem Chunder...	4th class clerk, Secretariat, Government of India, P W D.	Imperial Secretariat Buildings	ditto	
2475	Mozoomdar, Hemendra Nath	Clerk, Accountant-General's Office, P W D.	Ditto ...	ditto	
2476	Mozoomdar, Jnanendra Lal	3rd Assistant to Bengali Translator to the Government of Bengal.	Writers' Buildings ...	ditto	
2477	Mozoomdar, Khogandra Nath	Clerk, Audit Office, E I R ...	E I R House ...	ditto	
2478	Mozoomdar, Norendra Krishna	Clerk, Audit Office, E I R ...	Ditto ...	ditto	
2479	Mozoomdar, Radhica Prasanna.	Clerk, Office of Government Examiner of Railway Accounts, P W D.	Ditto ...	ditto	
2480	Mozoomdar, Rakhal Das ...	Assistant, Office of Secretary to the Government of India, Finance and Commerce Departments.	Treasury Buildings ...	ditto	
2481	Mozoomdar, Saret Chandra	Professor, General Assembly's Institution.	Cornwallis Square ...	ditto	
2482	Mozoomdar, Sashi Bhusan...	2nd clerk, Department of Land Records and Agriculture, Bengal.	Writers' Buildings ...	ditto	
2483	Mozoomdar, Shama Churn	Jr. 5th class clerk, Lower Division, Office of Secretary to the Government of India, Military Department.	6, Esplanade, East ...	ditto	

2484	Mozoomdar, T N ...	Food Inspector, District No II, Municipal Office.	Municipal Office ...		ditto
2485	Mullick, Aghore Nath ...	Assistant, Bengal Office, Judicial, Political and Appointment Departments.	Writers' Buildings ...		ditto
2486	Mullick, Akshya Kumar ...	Assistant, Board of Revenue, L P ...	2, Bankshall Street ...		ditto
2487	Mullick, Aptap Chunder ...	Inhabitant ...	Beadon Street, Simla ...		ditto
2488	Mullick, Batto Kristo ...	Clerk, Gillanders, Arbuthnot & Co ...	8, Clive Street ...		ditto
2489	Mullick, Gopi Nath ...	Head Clerk, Delhi and London Bank, Ld.	4, Council House Street ...		ditto
2490	Mullick, Gora Chand ...	Assistant, Struthers & Co, Ld ...	28, Strand Road ...		ditto
2491	Mullick, Jadu Nath ...	4th class Assistant, Office of Controller of Military Accounts, E C, Supply and Transport Branch.	3, Koila Ghât Street ...		ditto
2492	Mullick, Kapil Chunder ...	Head Draftsman, Chief Engineer's Office, E I R.	E I R House ...		ditto
2493	Mullick, Saroda Churn ...	Clerk, National Bank of India, Ld ...	104, Clive Street ...		ditto
2494	Mullick Chaudhiri, Banka Behary.	Professor, C M S College ...	18, Simla Street ...		ditto
2495	Mundle, Brindaban ...	Estimator, Military Works, Office of Commanding Royal Engineer, Presidency District.	Fort William ...		ditto
2496	Mundle, Upendro Lall ...	6th class clerk, Secretariat, Government of India, P W D.	Imperial Secretariat Buildings		Christian
2497	Murigiah Chetty, S ...	Accountant, Office of Government Examiner of Railway Accounts, E I R.	E I R House ...		Hindu
	N				
2498	Nadirshaw, D ...	Stenographer, A P Stockwell & Co ...	2, Pollock Street ...		Zoroastrian
2499	Nag, Chandra Kanta ...	Assistant, Office of Commissioner of Excise and Salt, Bengal.	2, Bankshall Street ...		Hindu
2500	Nag, Hem Chunder ...	Assistant, Office of Inspector-General of Police, L P.	Writers' Buildings ...		ditto

No.	Names.	Style or Calling.	Residence or place of business.	Religion.	Remarks.
	N				
2501	Naik, Mehir Lall ...	Assistant, Massey & Co ...	5, Clive Row ...	Hindu	
2502	Nand Sing ...	Draftsman, Chief Engineer's Office, E I R.	E I R House ...	ditto	
2503	Nandan, Ranjan Mohan ...	Inspector, Collector's Department ...	Municipal Office ...	ditto	
2504	Nath, Rajat Chandra ...	Assistant, Board of Revenue, L P ...	2, Bankshall Street ...	Christian	
**2505	Nazem-uddin, Maulvi ...	Clerk, Home Department ...	Home Department ...	Muhammadan	
2506	Nundy, Hurry Dass ...	Assistant, Finlay, Muir & Co ...	1, Clive Street ...	Hindu	
2507	Nundy, Jogendro Nath ...	Assistant, Macneill & Co ...	2, Clive Ghât Street ...	ditto	
2508	Nundy, Rakhal Das ...	Assistant, Military Accounts Department, Ordnance and Clothing Branches.	Military Accounts Department Buildings, Koila Ghât Street.	ditto	
2509	Nundy, Sidessur ...	Assistant, Finlay, Muir & Co. ...	1, Clive Street ...	ditto	
2510	Nundy, Srish Chandra ...	Assistant, Board of Revenue, L P ...	2, Bankshall Street ...	ditto	
2511	Nundy, Tincoree ...	Firm of T C Nundy & Co ...	70, Old China Bazar Street ...	ditto	
	O				
2512	Oonvala, Manchershaw Framjee	Head Assistant, Bengal Secretariat, Financial Department.	Writers' Buildings ...	Parsee	
2513	Osman Ally, M ...	Hackney Carriage Inspector, Calcutta Corporation.	Municipal Office ...	Muhammadan	
	P				
2514	Palit, Anath Nath ...	Professor, Metropolitan Institution ...	Sunkur Ghose's Lane, Bar Simla.	Hindu	
2515	Pandit, Akshoya Kumar ...	Assistant, Office of Secretary to the Government of India, Finance and Commerce Departments.	Treasury Buildings ...	ditto	
2516	Patuck, Akhoy C ...	Assistant, David Sassoon & Co, Ld...	3, Fairlie Place ...	ditto	
2517	Patuck, Nemy Churn ...	Assistant, Finlay, Muir & Co ...	1, Clive Street ...	ditto	
2518	Paul, Atul Bihary ...	Assistant, Board of Revenue, L P ..	2, Bankshall Street ...	ditto	
2519	Paul, Brojo Nath ...	Pipe-laying Overseer, Corporation of Calcutta.	11-2, Peary Dass' Lane ...	ditto	

2520	Paul, Chandra Sekhur	...	Assistant, Mackintosh, Burn & Co ...	8, Esplanade, East ...	ditto
2521	Paul, Gugan Chunder	...	Assistant, Stationery Department, Office of Superintendent of Stamps and Stationery.	4 & 5, Church Lane ...	ditto
2522	Paul, Haran Chunder	...	3rd class Assistant, Office of Controller of Military Accounts, E C, Supply and Transport Branch.	3, Koila Ghât Street ...	ditto
2523	Paul, Hari Churn	...	Inhabitant ...	Nundo Coomar Chowdhuri's Lane, Bar Simla.	ditto
2524	Paul, Hari Das	...	Assistant, James Murray & Co ...	12, Government Place ...	ditto
2525	Paul, Obhoy Churn	...	Assistant, Turner, Morrison & Co ...	6, Lyons Range ...	ditto
2526	Paul, Purna Chunder	...	Inspector of Lightning Conductors, Office of Executive Engineer, 1st Calcutta Division.	Writers' Buildings ...	ditto
2527	Paul, Radhamadhub	...	Accountant, Andrew Yule & Co ...	7, Clive Row ...	ditto
2528	Paul, Shoya Chand	...	Assistant, Turner, Morrison & Co ...	6, Lyons Range ...	ditto
2529	Paul, Shyma Churn	...	1st grade Accountant, Office of Controller of Military Accounts, E C.	3, Koila Ghât Street ...	ditto
2530	Paul, Sobharam	...	Firm of Paul, Paul & Co ...	18, British Indian Street ...	ditto
2531	Pirosbaw, Dorabji Gorwalla		Manager, Temple Bar Hotel ...	177, Dhurrumtollah Street ...	Parsee
2532	Pramanik, Joytish Chandra		Education Head Clerk, Presidency Commissioner's Office.	3, Charnock Place ...	Hindu
2533	Pyne, Brojo Nath	...	Assistant, Mackinnon, Mackenzie & Co	16, Strand ...	ditto
*2534	Pyne, J N	...	6th class clerk, Secretariat, Government of India, Public Works Department.	Imperial Secretariat Buildings	Christian

R

2535	Rae, H B	...	Education Department, Bengal, Presidency College.	College Square ...	ditto
*2536	Ragho Ram	...	5th class clerk, Secretariat, Government of India, Public Works Department.	Imperial Secretariat Buildings	Hindu
2537	Rana, B C	...	Resident Engineer, Calcutta Corporation.	4, Corporation Street ...	ditto

No.	Names.	Style or Calling.	Residence or place of business.	Religion.	Remarks.
	R				
2538	Roy, Ashutosh ...	Clerk, Office of Government Examiner of Railway Accounts, P W D.	E I R House ...	Hindu	
2539	Roy, Bhobokally ...	Cashier, B C R ...	159, Bow Bazar Street ...	ditto	
2540	Roy, Bonomaly ...	Clerk, Robinson, Morrison & Co ...	5, Commercial Buildings ...	ditto	
2541	Roy, Choonee Lal ...	2nd grade Accountant, Office of Controller of Military Accounts, E C.	3, Koila Ghât Street ...	ditto	
2542	Roy, Devendra Nath, M.A.	Professor, Ripon College ...	60, Mirzapore Street ...	ditto	
2543	Roy, Gosto Behary ...	Assistant, Kettlewell, Bullen & Co. ...	21, Strand Road ...	ditto	
*2544	Roy, Gouri Kanto ...	Clerk, Home Department ...	Home Department ...	Brahmo	
2545	Roy, Haradhan ...	Professor, Albert College ...	15, College Square ...	Hindu	
*2546	Roy, Hem Chunder ...	Clerk, Office of Accountant-General, P W D.	Imperial Secretariat Buildings	Christian	
2547	Roy, H K ...	Sanitary Inspector, District No. I, Municipal Office.	79, Cornwallis Street ...	Hindu	
2548	Roy, H M ..	Clerk, Agent's Office, E I R ...	E I R House ...	Christian	
2549	Roy, Hurry Narain ...	Assistant, Lyall, Marshall & Co ...	25, Mangoe Lane ...	Hindu	
2550	Roy, Jitendra Nath ...	License Inspector ...	Municipal Office ...	ditto	
*2551	Roy, Jogendranath, B.A. ...	Assistant, Bengal Office, General and Revenue Departments.	Writers' Buildings ...	ditto	
2552	Roy, Kali Prosonno ...	Head Assistant, Office of Inspector-General of Police, L P.	Writers' Buildings ...	ditto	
2553	Roy, Khirode Nath ...	Assistant, Williamson, Magor & Co...	4, Mangoe Lane ...	ditto	
2554	Roy, Kiran Chunder ...	Assistant, Office of Inspector-General of Civil Hospitals and Sanitary Commissioner for Bengal.	Writers' Buildings ...	ditto	
2555	Roy, Lal Behary ...	Assistant, Great Eastern Hotel Co, Ld.	1, 2 & 3, Old Court House Street.	ditto	
2556	Roy, Muktidaranjan ...	Professor, Metropolitan Institution...	Sunker Ghose's Lane, Bar Simla.	ditto	
2557	Roy, Mutty Lall ...	Inhabitant ...	Colootollah ...	ditto	

2558	Roy, Nato Behari	...	Cashier, Standard Oil Co of New York.	8, Dalhousie Square, East	...	ditto
2559	Roy, Nogendra Nath	...	Clerk, F W Heilgers & Co ...	136, Canning Street	...	ditto
2560	Roy, Norendra Nath	...	Assistant, Shaw, Wallace & Co ...	20, Strand Road	...	ditto
2561	Roy, P K	...	Health Officer, District No. II, Municipal Office.	Municipal Office	...	Brahmo
2562	Roy, Polin Chunder	...	Broker ..	Commercial Buildings	...	Hindu
*2563	Roy, P N	...	Clerk, Foreign Office ...	Esplanade, West	...	ditto
2564	Roy, Priya Nath	...	Deputy Inspector of Schools, Calcutta	12, Dalhousie Square	...	ditto
2565	Radha Kanta	...	Head Assistant, Pre Audit Section ...	Municipal Office	...	ditto
2566	Roy, Radha Nath	...	Sub-Registrar of Calcutta ...	Writers' Buildings	...	ditto
2567	Roy, Radhika Nath	...	Clerk, Office of Controller of Military Accounts, Accounts Branch, E C.	3, Koila Ghât Street	..	ditto
2568	Roy, Rajkumar	..	Establishment Clerk, General Traffic Manager's Office, E I R.	E I R House	...	ditto
2569	Roy, R P	...	Resident Engineer, Municipal Office	4, Corporation Street	...	ditto
2570	Roy, Sarat Chunder	...	Assistant, Finlay, Muir & Co ...	1, Clive Street	...	ditto
2571	Roy, Saroda Prosad	..	Assistant, Board of Revenue, L P ...	2, Bankshall Street	...	ditto
2572	Roy, Saroda Prosad	...	Assistant, Williamson, Magor & Co...	4, Mangoe Lane	...	ditto
2573	Roy, Satis Chunder	...	Dy. License Officer, Municipal Office	Municipal Office	...	ditto
2574	Roy, Satyendra Nath	...	Assistant, Board of Revenue, L P ...	2, Bankshall Street	...	ditto
*2575	Roy, Shama Churn	...	Junior 2nd class clerk, Lower Division, Office of Secretary to the Government of India, Military Department.	6, Esplanade, East	...	ditto
2576	Roy, Shoshi Sikhar	...	Assistant, Bengal Secretariat, Financial Department.	Writers' Buildings	...	ditto
2577	Roy, Sita Nath	..	Assistant, Shaw, Wallace & Co. ...	20, Strand Road	...	ditto
*2578	Roy, S. K.	..	Assistant, Office of Secretary to the Government of India, Revenue and Agricultural Department, Revenue Branch.	Imperial Secretariat Buildings		ditto
*2579	Roy, S N	...	Clerk, Foreign Office ...	Esplanade, West	...	ditto

No.	Names.	Style or Calling.	Residence or place of business.	Religion.	Remarks.
	R				
2580	Roy, Surendra Nath ...	Assistant, Board of Revenue, L P ...	2, Bankshall Street ...	Hindu	
2581	Roy, Tarak Nath ...	Reader, Bengal Secretariat Press ...	Writers' Buildings ...	ditto	
2582	Roy Chowdhury, Bepindra Kumara.	Superintendent, Office of Comptroller-General and Comptroller, India Treasuries.	The Treasury ...	ditto	
2583	Roy Chowdhury, Jogendra Chandra.	Head Clerk, Office of Inspector-General of Prisons, Bengal.	Writers' Buildings ...	ditto	
2584	Roy Chowdhury, Nalini Nath.	Assistant, Statistical Department, Government of India.	7, Koila Ghât Street ...	ditto	
2585	Roy Chowdhury, Priya Nath	Assistant, F. Harley & Co ...	10, Lall Bazar Street ...	ditto	
2586	Rudra, Atal Behary ...	Clerk, Grindlay & Co ...	11, Hastings Street ...	ditto	
2587	Rudra, Manmatha Nath ...	Second Assistant to Bengali Translator to the Government of Bengal.	Writers' Buildings ...	ditto	
2588	Rustomjee, C M ...	Assistant, F W Heilgers & Co ...	136, Canning Street ...	Parsee	
	S				
2589	Saha, Bidhu Bhusan ...	Assistant, Finance and Commerce Departments	Treasury Buildings ...	Hindu	
*2590	Saha, S B ...	Assistant, Office of Secretary to the Government of India, Revenue and Agricultural Department, Revenue Branch.	Imperial Secretariat Buildings	ditto	
2591	Said Uddin Ahmad ...	Assistant, Office of Private Secretary to the Viceroy.	6, Council House Street ...	Muhammadan.	
2592	Sanyal, Jogendro Nath ...	Assistant Superintendent, Accountant-General's Office, Bengal.	The Treasury ...	Hindu	
2593	Sanyal, M P ...	Sanitary Inspector, District No. II, Municipal Office.	Municipal Office ...	ditto	
2594	Sanyal, Suresh Chunder ...	Supervisor, District Engineer's Office District No. 2.	ditto ...	ditto	
2595	Sanyal, Shama Churn ...	Assistant, Mackinnon, Mackenzie & Co.	16, Strand ...	ditto	
*2596	Sarvan Lall ...	6th class clerk, Secretariat, Government of India, Public Works Department.	Imperial Secretariat Buildings	ditto	
2597	Seal, Basanta Kumar ...	Clerk, Comptroller-General's Office ..	The Treasury ...	ditto	
2598	Seal, Behary Lall ...	Clerk, Harnack & Co ...	10 & 10-A. Old Court House Street	ditto	

2599	Seal, Benode Behari	...	Assistant Superintendent, Accountant-General's Office, Bengal.	The Treasury	... ditto
2600	Seal, Debendra Nath	...	Assistant, David Sassoon & Co, Ld	3, Fairlie Place	... ditto
2601	Seal, Doorga Das	...	Partner, Ram Chand Seal & Co ...	41, Strand, North	... ditto
2602	Seal, Gobordhone	...	Cashier, Chartered Bank of India, Australia and China.	5, Council House Street	... ditto
2603	Seal, H D	...	Assistant, Framjee & Sons ...	11, Bentinck Street	... ditto
2604	Seal, Nittanundo	...	Assistant, J. Thomas & Co ...	8, Mission Row	... ditto
2605	Seal, Norendro Nath	...	Assistant, Board of Revenue, L P ...	2, Bankshall Street	... ditto
2606	Seal, Nundo Lall	...	Assistant Cashier, National Bank of India, Ld.	104, Clive Street	... ditto
2607	Seal, Nundo Lall	...	Assistant, David Sassoon & Co, Ld ...	3, Fairlie Place	... ditto
2608	Seal, Sasi Bhushan	...	Assistant, Pigott, Chapman & Co ...	1, Mission Row	... ditto
2609	Seal, Sham Lall	...	Head Clerk and Sarishtadar, Presidency Commissioner's Office.	3, Charnock Place	... ditto
2610	Seal, Sarat Chunder	...	Head Packer, Office of Superintendent of Stamps and Stationery.	4-5, Church Lane	... ditto
2611	Seal, Upendra Nath	...	Head Clerk, Mitchell & Co ...	17, Chowringhee	... ditto
2612	Sen, Annada Churn	...	Assistant, Board of Revenue, L P ...	2, Bankshall Street	... ditto
2613	Sen, Benode Bihari	...	Assistant to Director of Public Instruction, Bengal.	Writers' Buildings	... ditto
2614	Sen, Bepin Behary	...	Assistant, Bissonath Law & Co ...	2, Larkins' Lane	... ditto
2615	Sen, Bhobanee Coomar	...	Clerk, National Bank of India, Ld ...	104, Clive Street	... ditto
2616	Sen, Chandi Churn, B.A.		Assistant, Bengal Secretariat, General and Revenue Departments.	Writers' Buildings	... ditto
2617	Sen, Chandra Bhusan	...	Superintendent, Comptroller-General's Office.	The Treasury	... ditto
2618	Sen, C L	...	Food Inspector, District No. III, Municipal Office.	Municipal Office	... ditto
2619	Sen, Dinesh Chunder	...	Assistant, Birkmyre Brothers ...	6, Clive Row	... ditto
2620	Sen, Girish Chunder	...	Assistant Mackinnon, Mackenzie & Co.	16, Strand	... ditto
2621	Sen, Gooroopada	...	Clerk, Chartered Bank of India, Australia and China.	5, Council House Street	... ditto
2622	Sen, Hem Nath	...	Assessor of Income-tax ...	3, Charnock Place	... ditto
2623	Sen, Hem Nath	...	Assistant, Great Eastern Hotel Co, Ld	1, 2 and 3, Old Court House Street.	ditto

No.	Name	Style or Calling.	Residence or place of business.	Religion.	Remarks.
	R				
2624	Sen, Hira Lall ...	Clerk, Comptroller-General's Office...	The Treasury ...	Hindu.	
2625	Sen, Jamini Kanta ...	Accountant, Office of Examiner of Ordnance Factory Accounts in India.	1, Koila Ghât Street ...	ditto	
2626	Sen, Jeebon Krisna ...	Clerk, G. F. Kellner & Co ...	32, Chowringhee ...	ditto	
2627	Sen, Jnanendra Mohun ...	Assistant, Board of Revenue, L P	2, Bankshall Street ...	ditto	
2628	Sen, Jogendra Nath ...	Clerk, Audit Office, E I R ...	E I R House ...	ditto	
2629	Sen, Kanny Lall ...	Head Clerk, Photographic and Lithographic Department, Surveyor-General's Office.	14, Wood Street ...	ditto	
2630	Sen, Kanti Chunder ...	Clerk, Correspondence Branch, Surveyor-General's Office.	13, Wood Street ...	ditto	
2631	Sen, Mahit Chandra ...	Professor, City College ...	18, Mirzapore Street ...	ditto	
2632	Sen, Modhu Sudon ...	Assessor, Income-tax ...	3, Charnock Place ...	ditto	
2633	Sen, Norendra Nath ...	Assistant, Mackinnon, Mackenzie & Co	16, Strand ...	ditto	
2634	Sen, Opoorba Kissen ...	Cashier, Bengal Chamber of Commerce.	2, Clive Street ...	ditto	
2635	Sen, Paresh Nath ...	Assistant, Barlow & Co ...	37, Strand Road ...	ditto	
2636	Sen, Potit Pabun ...	Cashier, *Statesman* Office ...	3, Chowringhee ...	ditto	
2637	Sen, Pramatha Nath ...	Clerk, Home Department ...	Home Department ...	ditto	
2638	Sen, Preonath ...	5th class Senior clerk, Upper Division, Office of Secretary to the Government of India, Military Department.	6, Esplanade, East ..	ditto	
2639	Sen, R ...	District Health Officer, District No. I, Municipal Office.	79, Cornwallis Street ...	ditto	
[illegible]	Sen, Ramesh Chunder ...	Assessor, Income-tax ...	3, Charnock Place ...	ditto	
2641	Sen, S ...	Assistant, Shrager Brothers ...	26, Dalhousie Square ...	ditto	
2642	Sen, Sarat Chunder ...	Sub-Assessor, Municipal Office ...	Municipal Office ...	ditto	
2643	Sen, Saroda Persad ...	Personal Assistant to Inspector-General of Prisons, Bengal.	Writers' Buildings ...	ditto	
2644	Sen, Satis Chunder ...	License Inspector ...	Municipal Office ...	ditto	
2645	Sen, Surut Chunder ...	Cashier, Standard Life Assurance Co	32, Dalhousie Square ...	ditto	
2646	Sen Gupta, Purna Chunder	1st class clerk, Office of the Accountant-General, Military Department	6, Esplanade Row, East ...	ditto	

2647	Sett, Baishnab Churn	... Assistant, James Murray & Co	...	12, Government Place	... ditto
2648	Sett, Dhan Ballav	... Principal, Albert College	...	15, College Square	... ditto
2649	Sett, Dino Nath	... Clerk, Bird & Co	...	101-1, Clive Street	... ditto
2650	Sett, Hari Das	... 1st clerk, Office of Superintending Engineer, Central Circle.		Writers' Buildings	... ditto
2651	Sett, R N	... Tailor and Milliner	...	29-2, Cornwallis Street	... ditto
2652	Shaik, Meera Buksh	... Clerk, Office of Pay Examiner, Military Accounts Department, E C.		3, Koila Ghât Street	... Muhammadan
2653	Shastri, Ashutosh, M.A.	... Lecturer, Sanskrit College	...	College Square	... Hindu
2654	Shaw, Joy Kristo	... Engraver, Engraving Department, Surveyor-General's Office.		13, Wood Street	... ditto
2655	Shaw, Kali Kumar	... Clerk, Printing Department, E I R		E I R House	... ditto
2656	Shaw, Pran Kissen	... Sree Kissen Shaw & Brothers	...	219, Old China Bazar Street	... ditto
2657	Shome, H D	... Partner, Tevor & Co	...	14, Old Court House Lane	... ditto
2658	Shome, Poresh Chunder	... Assistant, Bengal Secretariat, P W D		Writers' Buildings	... ditto
2659	Shome, Sarat Soshi	... Overseer, Municipal Office	...	61, Simla Street	... ditto
2660	Shome, Sri Lal	... Assistant Head Master, Hindu School.		College Square	... ditto
2661	Showkat Ali	... Trader	...	Upper Circular Road	... Muhammadan
2662	Sil, Goocool Nath	... Assistant, Bengal Secretariat, P W D		Writers' Buildings	... Hindu
2663	Sing, Doorga Dass	... Cashier, I R G P T W & Co, Ld	...	1-1, Fairlie Place	... ditto
2664	Sing, H L	... Assistant, Mackinnon, Mackenzie & Co.		16, Strand	... Christian
*2665	Singh, Kesar	... Clerk, Home Department	...	Home Department	... Hindu
2666	Singh, Khetter Mohun	... Inhabitant	...	15, Rajendro Nath Sen's Lane, Kassaripara.	ditto
*2667	Singh, Lutchman	... 7th class clerk, Secretariat, Government of India, P W D.		Imperial Secretariat Buildings	ditto
2668	Singh, Priya Nath	... 4th class Assistant, Office of Controller of Military Accounts, E C, Supply and Transport Branch.		3, Koila Ghât Street	... ditto
2669	Singha, Benode Behary	.. Assistant, Bengal Office, Judicial, Political and Appointment Departments.		Writers' Buildings	... ditto
2670	Singha, Benode Behary	... Assistant to Director of Public Instruction, Bengal.		Writers' Buildings	... ditto

No.	Name	Style or Calling.	Residence or place of business.	Religion.	REMARKS.
	S				
*2671	Singha, Devendra Nath ...	Jr. 2nd class clerk, Lower Division, Office of Secretary to the Government of India, Military Department.	6, Esplanade, East ...	Hindu	
2672	Singha, Jogendra Lal ...	Education Department, Presidency College.	College Square	ditto	
2673	Singha, Nava Gopal ...	Accountant, Office of Government Examiner of Railway Accounts. P W D.	E I R House ...	ditto	
*2674	Singha, Purushottom ...	Clerk, Home Department .	Home Department ...	ditto	
2675	Singha Roy, Bidhu Bhusan	Assistant, Office of Inspector-General of Civil Hospitals and Sanitary Commissioner for Bengal.	Writers' Buildings ...	ditto	
*2676	Sircar, A K ...	Assistant, Office of Secretary to the Government of India, Revenue and Agricultural Department, Emigration Branch.	Imperial Secretariat Buildings	ditto	
*2677	Sircar, Charoo Chunder ..	Superintendent, Home Department ...	Home Department ...	ditto	
2678	Sircar, Davendra Nath ...	Clerk, Standard Life Assurance Co	32, Dalhousie Square ...	ditto	
2679	Sircar, Dheer Kristo ...	Deputy Treasurer, Government House, Office of Private Secretary to the Viceroy.	6, Council House Street ...	ditto	
2680	Sircar, Heera Laul ...	Assistant, Harold & Co ...	3, Dalhousie Square ...	ditto	
2681	Sircar, Hem Chander (Rai Bahadur).	Treasurer, Government House, Office of Private Secretary to the Viceroy.	6, Council House Street ...	ditto	
2682	Sircar, Hurrish Chandra ...	Clerk, Office of Consulting Engineer to the Government of India for Railways.	E I R House ...	ditto	
2683	Sircar, Nani Lall ...	Bustee Assessor, Municipal Office ...	Municipal Office ...	ditto	
2684	Sircar, Nitto Gopal ...	Shed Officer, Office of the Calcutta Port Commissioners.	[illegible] Road ...	ditto	
2685	Sircar, Paresh Nath ...	2nd Clerk of Works, Office of the Calcutta Port Commissioners.	[illegible] Road ...	ditto	

2686	Sircar, Ram Dass	...	Superintendent, Comptroller General's Office.	The Treasury	...	ditto
2687	Sircar, Sristidhur	...	Head Clerk, Martin & Co	...	Jackson House	...	ditto
*2688	Soondar Lall	...	7th class clerk, Secretariat, Government of India, Public Works Department.	Imperial Secretariat Buildings		ditto
2689	Superiwalla, N S	...	Assistant, E D Sassoon & Co	...	2 & 3, Clive Row	...	Parsee
2690	Sur, Jogendra Nath	...	Assistant, Finlay, Muir & Co	...	1, Clive Street	...	Hindu
2691	Sur, K N	...	Assistant, K C Biswas & Co	...	1, Chowringhee	...	ditto
	T						
2692	Tarafdar, Panchanon	...	Overseer, Calcutta Waterworks, Municipal Office.	5, Corporation Street	...	ditto
	V						
2693	Vasvani, T L	...	Professor, Metropolitan Institution...	Sunker Ghose's Lane, Bar Simla.		ditto
2694	Venkataram Aiyar, A V	...	Clerk, Comptroller-General's Office...	The Treasury	...	ditto
2695	Vidyasagura, Jibananda	...	Free Sanskrit College	...	2, Romanath Mozumdar's Street.	ditto
	W						
*2696	Wahid Hussein, Saiyad	...	Clerk, Foreign Office	...	Esplanade, West	...	Muhammadan

NOTE.- The Jurymen whose names are marked with asterisks are available only during the months of December, January, February, and March.

W. R. FINK,

Registrar and Clerk of the Crown.

SPECIAL JURY LIST.

List of Persons liable to serve on Special Juries in the High Court of Judicature at Fort William in Bengal for the year ensuing from 1st May 1905, pursuant to Act V of 1898.

No.	Names.	Style or Calling.	Residence or place of business.	Religion.	Remarks.
	A				Errors in name and description can be corrected on communication to the office of the Clerk of the Crown. Persons claiming exemption should communicate their claims and grounds thereof to the Clerk of the Crown as soon as possible after service of summons, and so also should any person summoned and unable to attend for any cause, stating the cause, so that, if sufficient cause is shown, the Sheriff may be directed to summon another juryman.
1	Ackland, W F	... Traffic Manager, E I R	... E I R House	... Christian	
2	Adams, A C	... Manager, The Arracan Co, Ld	... 28, Dalhousie Square	... ditto	
3	Aitken, W R T	... Partner, Kettlewell, Bullen & Co	... 21, Strand Road	... ditto	
4	Aldam, W C	... Partner, W S Cresswell & Co	... 10, Hare Street	... ditto	
5	Anderson, Geo. Lane	... Resident Manager, New York Life Insurance Co	8, Old Court House Street ...	ditto	
6	Apcar, G	... Assistant, Apcar & Co	... 19, Radha Bazar	... ditto	
7	Ashton, H S	... Partner, Shaw, Wallace & Co	... 20, Strand Road	... ditto	
	B				
8	Bailey, W L	... Partner, Baleh, Bailey & Co	... 15, Hare Street	... Christian	
9	Baker, J W	... Partner, Barry & Co	... 5, Lyons Range	... ditto	
10	Bathford, T B St John	... Chief Auditor, E I R	... E I R House	... ditto	
11	Bateson, H	... Partner, Gillanders, Arbuthnot & Co	8, Clive Street	... ditto	
12	Bayley, W E	... Partner, Perman and Hynd	... 23, Strand Road	... ditto	
13	Begg, H C	... Partner, Begg, Dunlop & Co	... 12, Mission Row	... ditto	
14	Benthal, H E	... Chief Auditor and Accountant, B C R	159, Bow Bazar Street	... ditto	
15	Bertram, J R	... Partner, Gladstone, Wyllie & Co	... 101, Clive Street	... ditto	
16	Blair, A J F	... Editor, *Englishman*	... 9, Hare Street	... ditto	
17	Blair, D C	... Signs the firm of Finlay, Muir & Co	1, Clive Street	... ditto	
18	Boyd, L	... Partner, Blacker & Co	... 2, Clive Street	... ditto	

19	Bradshaw, W J	...	Director, Walter, Locke & Co, Ld. ...	4, Esplanade	...	ditto
20	Brown, W	...	Signs the firm of Finlay, Muir & Co	1, Clive Street	...	ditto
21	Bruce, T W L	...	Offg. Superintendent, Depositors' Department, Bank of Bengal.	Strand	...	ditto
22	Bushby, W	...	Proprietor, Steuart & Co ...	8, Old Court House Corner	...	ditto
	C					
23	Calvocoressi, M J	...	Manager, Ralli Brothers ...	1 and 2, Church Lane	...	Christian
24	Cameron, P E	...	Agent, Hong Kong and Shanghai Banking Corporation.	31, Dalhousie Square	...	ditto
25	Campbell, D A	...	Partner, Begg, Dunlop & Co ...	12, Mission Row	...	ditto
26	Caw, R C	...	Partner, Shaw, Wallace & Co ...	20, Strand Road	...	ditto
27	Chettle, E A	...	Partner, Shaw, Wallace & Co ...	20, Strand Road	...	ditto
28	Clark, J B	...	Partner, Landale and Clark ...	12, Clive Row	...	ditto
29	Coates, C H	...	Partner, Lovelock and Lewes ...	25, Mangoe Lane	...	ditto
30	Cohen, R M	...	Manager, David, Sassoon & Co, Ld ..	3, Fairlie Place	...	Jew
31	Cnak, W R	...	Manager Import Department, George Henderson & Co.	100, Clive Street	...	Christian
32	Cresswell, W N	..	Managing Agent, Sir Jacob Behrens & Sons.	3, Commercial Buildings	...	ditto
33	Currie, Dan	...	Partner, Macneill & Co ...	2, Clive Ghat Street	...	ditto
34	Curtis-Hayward, T	...	Assistant, George Henderson & Co ...	100, Clive Street	...	ditto
	D					
35	Danby, C J	...	Partner, C & A Danby ...	14, Radha Bazar	...	Christian.
36	Davies, Walter	...	Partner, Hamilton & Co ...	8, Old Court House Street	...	ditto
37	Davis, G A	...	Superintendent, Jail Manufactures ...	Writers' Buildings	...	ditto
38	Dean, J G	...	Partner, Anderson, Wright & Co ...	22, Strand	...	ditto
39	Deane, E M	...	Depôt Manager, Army and Navy Co-operative Society, Ld.	41, Chowringhee	...	ditto
40	Dent, Arthur J	...	Partner, Gladstone, Wyllie & Co ...	101, Clive Street	...	ditto
41	deSchmid, C G H	...	Assistant, Commercial Union Assurance Co, Ld.	29, Dalhousie Square	...	ditto
42	Dickson, J G	...	Partner, Gladstone, Wyllie & Co ...	101, Clive Street	...	ditto
43	Dickson, W E G C	...	Assistant, Jardine, Skinner & Co. ...	4, Clive Row	...	ditto
44	Dolton, J A	...	Manager, Thos. Cook & Son ...	9, Old Court House Street	...	ditto

No.	Names.	Style or Calling.	Residence or place of business.	Religion.	Remarks.
	D				
45	Dott, Alexander, S	... Partner, MacDowell & Co	... 7-1, Wellesley Place	...	Christian
46	Dowding, W K	... Partner, Turner, Morrison & Co	... 6, Lyons Range	...	ditto
47	Dring, W A	... General Traffic Manager, E I R	... E I R House	...	ditto
48	Dykes, J A	... Partner, J A Dykes & Co	... 102, Clive Street	...	ditto
	E				
49	Eden, E B	... Proprietor, W Newman & Co	... 4, Dalhousie Square	...	Christian
50	Edie, D C D	... Agent, Allahabad Bank, Ld	... 101-1, Clive Street	...	ditto
51	Eilee, E H	... Partner, Pigott, Chapman & Co	... 1, Mission Row	...	ditto
52	Ellis, C W	... Assistant, A Agelasto & Co	... 8, Clive Row	...	ditto
53	Elton, C J	... Assistant, Kilburn & Co	... 4, Fairlie Place	...	ditto
54	Ewing G	... Assistant Examiner, Office of Examiner, P W Accounts, Bengal.	Writers' Buildings	...	ditto
	F				
55	Forsyth, Alexander	... Partner, Graham & Co	... 9, Clive Street	...	Christian
56	Fraser, T	... Agent, Chartered Bank of India, Australia and China.	5, Council House Street	...	ditto
57	Froom, F	... Offg. Chief Superintendent, Traffic Department, E I R.	E I R House	...	ditto
58	Fyffe, Chas L	... Manager and Under-writer, Commercial Union Assurance Co, Ld.	29, Dalhousie Square	...	ditto
	G				
59	Gall, R L B	... Partner, Landale and Clark	... 12, Clive Row	...	Christian
60	Girard, W	... Partner, Bird & Co	... 101-1, Clive Street	...	ditto
61	Giro, C G	... Manager, Ralli Brothers	... 1 & 2, Church Lane	...	ditto
62	Glen, Andrew	... Assistant, Gladstone, Wyllie & Co	... 101, Clive Street	...	ditto
63	Goward, E A	... Partner, Walker, Goward & Co	... 32, Jackson Ghât Street	...	ditto
64	Graham, C W N	... Partner, Graham & Co	... 9, Clive Street	...	ditto

65	Grazebrooke, W O	...	Assistant, Gillanders, Arbuthnot & Co	8, Clive Street	...	ditto
66	Greenway, C	...	Partner, Shaw, Wallace & Co ...	20, Strand Road	...	ditto
67	Greig, D S K	...	Signs the firm of Finlay, Muir & Co	1, Clive Street	...	ditto
68	Gresson, R H A	...	Partner, Jardine, Skinner & Co ...	4, Clive Row	...	ditto
69	Gros, E F	...	Manager, International Banking Corporation.	27, Dalhousie Square	...	ditto
70	Grossmann, James	...	Partner, Grossmann & Co ...	2, Fairlie Place	...	ditto
71	Gubbay, E Sassoon	...	Manager, David Sassoon & Co, Ld ...	3, Fairlie Place	...	Jew
72	Gwyther, W B	...	Superintending Engineer, Central Circle. ...	Writers' Buildings	...	Christian
	H					
73	Haarbleicher, O G	...	Manager, Allen Brothers & Co ...	1, New China Bazar Street	...	Christian
74	Hadwen, J W	...	Partner, Perman and Hynd ...	23, Strand Road	...	ditto
75	Hamilton, D M	...	Member, Mackinnon, Mackenzie, & Co	16, Strand	...	ditto
76	Hamilton, Latham	...	Partner, Blacker & Co ...	2, Clive Street	...	ditto
77	Harper, J	...	General Manager, Marshall Sons & Co, Ld.	99, Clive Street	...	ditto
78	Harris, Geo P	...	Partner, Blacker & Co ...	2, Clive Street	...	ditto
79	Harris, H	...	Acting Accountant, Chartered Bank of India, Australia and China.	5, Council House Street	...	ditto
80	Hawke, Hon'ble E J	...	Managing Director, Bombay Company. Ld.	7-1, Lyons Range	...	ditto
81	Henderson, G	...	Partner, Octavius Steel & Co ...	14, Old Court House Street	...	ditto
82	Henson, A E	...	Partner, Andrew Yule & Co ...	7, Clive Row	...	ditto
83	Hickie, E G	...	Secretary, Trades' Association ...	Dalhousie Institute	...	ditto
84	Hill, W E	...	Assistant Secretary, Standard Life Assurance Co	32, Dalhousie Square	...	ditto
85	Holmes, A C S	...	Partner, Carritt, Moran & Co ...	9, Mission Row	...	ditto
86	Hynd, D	...	Partner, Perman and Hynd ...	23, Strand Road	...	ditto
	J					
87	Jenkins, C	...	Partner, Hoare, Miller & Co ...	38, Strand Road	...	Christian
88	Johnston, J C R	...	Partner, Grindlay & Co ...	11, Hastings Street	...	ditto
89	Johnston, W C	...	Partner, Poppe, Delius & Co ...	15, Clive Row	...	ditto

No.	Names.	Style or Calling.	Residence or place of business.	Religion.	Remarks.
	J				
90	Jordan, A S	... Partner, J G Bagram & Co	... 14-2, Clive Row	...	Christian
91	Joshua, A R	... Partner, Perman & Hynd	... 23, Strand Road	...	Jew
	K				
92	Kempthorne, H E	... Manager, New Zealand Insurance Co	5-1, Council House Street	...	Christian
93	Ker, A J	... Manager, King, Hamilton & Co	... 7, Hare Street	...	ditto
94	King, D	... Managing Director, Bank of Calcutta, Limited.	7, Clive Row	...	ditto
95	Knight, Paul	... Proprietor, *Statesman*	... 3, Chowringhee	...	ditto
96	Knight, R	... Ditto	... Ditto	...	ditto
	L				
97	Langdon, W A	... Agent, Alliance Bank of Simla, Ld...	8, Council House Street	...	Christian
98	Larmour, F A	... Partner, C Lazarus & Co	... 60, Bentinck Street	...	ditto
99	Lawrie, P B	... Partner, Balmer, Lawrie & Co	... 103, Clive Street	...	ditto
100	Lewes, J H	... Partner, Lovelock and Lewes	... 25, Mangoe Lane	...	ditto
101	Lindsay, D	... Secretary, Royal Insuran e Co	... 26-27, Dalhousie Square	...	ditto
102	Lomax, C P	... Partner, Lyall, Marshall & Co	... 25, Mangoe Lane	...	ditto
	M				
103	MacCabe, W B	... Chief Engineer, Municipal Office	... Municipal Office	...	Christian
104	Mackenzie, W L	... Partner, Kettlewell, Bullen & Co	... 21, Strand Road	...	ditto
105	Macleod, H	... Superintendent, Bengal Coal Co, Ld	5, Fairlie Place	...	ditto
106	Macpherson, D W	... Partner, Perman and Hynd	... 23, Strand Road	...	ditto
107	Magnus, T A	... Assistant, Davenport & Co	... 101-1, Clive Street	...	ditto

108	Main, J A	...	Director, A & J Main & Co, Ld	...	31, Dalhousie Square	...	ditto
109	Malcolm, W S	...	Assistant, George Henderson & Co	...	100, Clive Street	...	ditto
110	Martin, H P	...	Partner, Martin & Co	...	Jackson House	...	ditto
111	Massey, Montague	...	Partner, Massey & Co	...	5, Clive Row	...	ditto
112	Mathews, C D	...	Partner, Barry & Co	...	5, Lyons Range	...	ditto
113	Mawdsley, R C	...	Partner, Norman Brothers	...	1/1, Vansittart Row	...	ditto
114	Maxwell, J T	...	Personal Assistant to Chief Engineer, E I R.		E I R House	...	ditto
115	McCabe, J E	...	Partner, Bird & Co	...	101-1, Clive Street	...	ditto
116	McDonald, J S	...	Partner, Mackintosh, Burn & Co	...	8, Esplanade, East	...	ditto
117	McGregor, James	...	Partner, Bathgate & Co	...	19, Old Court House Street	...	ditto
118	McKay, J R F	...	Manager, Brooke, Bond & Co, Ld	...	5-1, Council House Street	...	ditto
119	McLeod, N	...	Partner, McLeod & Co	...	31, Dalhousie Square	...	ditto
120	Meugens, E E	...	Partner, Meugens, King and Simson		102, Clive Street	...	ditto
121	Meugens, Marc	...	Partner, Meugens, King and Simson		102, Clive Street	...	ditto
122	Miles, W H	...	Manager, James Mackillican & Co	...	7, Church Lane	...	ditto
123	Moran, S	...	Partner, Carritt, Moran & Co	...	9, Mission Row	...	ditto
124	Morrison, W	...	Partner, Robinson, Morrison & Co		5, Commercial Buildings	...	ditto
125	Muir, M W	...	Signs the firm of Finlay, Muir & Co		1, Clive Street	...	ditto
126	Munro, J A C	...	Assistant, Gillanders, Arbuthnot & Co		8, Clive Street	...	ditto
127	Murray, G A	...	General Manager, Planters' Stores and Agency Company, Ld.		3, Mission Row	...	ditto
128	Murray, Reg	...	Chief Manager, Commercial Bank of India, Ld.		5-1, Fairlie Place	...	ditto
129	Myers, D B	...	Partner, J Thomas & Co	...	8, Mission Row	...	ditto
	N						
130	Nicoll, C	...	Manager, National Bank of India, Ld		104, Clive Street	...	Christian
131	Nicoll, John	...	General Manager, Thomas Duff & Co		15, Clive Row	...	ditto

No.	Names.	Style or Calling.	Residence or place of business.	Religion.	Remarks.
	N				
132	Nimmo, J D	... Partner, Duncan Brothers	... 14, Clive Street ...	Christian	
133	Norman, A	... Partner, Norman Brothers	... 1/1, Vansittart Row ...	ditto	
	O				
134	Ormiston, G A	... Partner, Balmer, Lawrie & Co	... 103, Clive Street ...	Christian	
135	Oswald, W W	... Manager, Standard Oil Co of New York.	8, Dalhousie Square ...	ditto	
136	Overend, T B G	... Partner, Place, Siddons and Gough...	1, Commercial Buildings ...	ditto	
	P				
137	Paterson, A S	... Assistant, Blackwood, Blackwood & Co.	12, Clive Street ...	Christian	
138	Paterson, R Jardine	... Assistant, Jardine, Skinner & Co ...	4, Clive Row ...	ditto	
139	Patterson, A C	... Partner, Becker, Gray & Co	... 7, Hastings Street ...	ditto	
140	Patton, L P	... Partner, Patton & Co	... 2, Mangoe Lane ...	ditto	
141	Percival, H M	... Education Department, Presidency College.	College Square ...	ditto	
142	Petrocochino, S D	... Partner, Petrocochino Brothers	... 4, Clive Street ...	ditto	
143	Pettit, M H	... Assistant, George Henderson & Co ...	100, Clive Street ...	ditto	
144	Phelps, W H	... Partner, Phelps & Co	... 15, Old Court House Street ...	ditto	
145	Pointon, A	... In charge of I G N & Ry Co's affairs, Kilburn & Co.	4, Fairlie Place ...	ditto	
146	Power, Fred E H	... Assistant, Blackwood, Blackwood & Co	12, Clive Street ...	ditto	
147	Preston, A	... Partner, Balmer, Lawrie & Co	... 103, Clive Street ...	ditto	
148	Prophit, J M G	... Partner, Turner, Morrison & Co	... 6, Lyons Range ...	ditto	
149	Prothero, M	... Education Department, Presidency College.	College Square ...	ditto	
	R				
150	Ralli, T D	... Manager, Ralli Brothers	... 1 & 2, Church Lane ...	Christian	
151	Ratcliffe, S K	... Editor, *Statesman*	... 3, Chowringhee ...	ditto	

152	Rodocanachi, J M	...	Partner, N J Valetta & Co	...	98, Clive Street	... ditto
153	Rose, L E D	...	Partner, Mackenzie, Lyall & Co	...	2, Lyons Range	... ditto
154	Ross, G F	...	Assistant Manager, South British Fire and Marine Insurance Co.		1, Lall Bazar Street	... ditto
155	Russell, E W S	...	Partner, Lovelock and Lewes	...	25, Mangoe Lane	... ditto
	S					
156	Scott, J W	...	Partner, J H Elliott & Co, Ld	...	29, Strand	... Christian
157	Shallow, A W	...	Partner, Mackenzie, Lyall & Co	...	2, Lyons Range	... ditto
158	Shorrock, Guy	...	Partner, Place, Siddons and Gough	...	1, Commercial Buildings	... ditto
159	Shorrock, J C	...	Partner, George Henderson & Co	...	100, Clive Street	... ditto
160	Shrager, James	...	Partner, Shrager Brothers	...	28, Dalhousie Square	... ditto
161	Siddons, F B	...	Partner, Place, Siddons & Gough	...	1, Commercial Buildings	... ditto
162	Sinclair, James	...	Firm of Sinclair, Murray & Co	...	1, Clive Row	... ditto
163	Sinclair, John	...	Broker	...	2, Clive Street	... ditto
164	Smith, Lockhart	...	Partner, Williamson, Magor & Co	...	4, Mangoe Lane	... ditto
165	Smith, O S	...	Executive Engineer, 1st Calcutta Division.		Writers' Buildings	... ditto
166	Smith, T	...	Assistant Controller of Military Accounts, in charge Accounts Branch, E.C.		3, Koila Ghât Street	... ditto
167	Smyth, F W	...	Assistant, Kettlewell, Bullen & Co	...	21, Strand Road	... ditto
168	Speirs, J C	...	Agent, Bank of Calcutta, Ld	...	7, Clive Row	... ditto
169	Staples, E W H	...	Agent & Chief Engineer, Bengal Central Railway.		159-1, Bow Bazar Street	... ditto
170	Stephen, Henry, MA	...	Principal, Duff College	...	74, Nimtollah Ghat Street	... ditto
171	Strain, J B	...	Partner, Bird & Co	...	101-1, Clive Street	... ditto
172	Stuart, J	...	Manager, Mercantile Bank of India, Ld		28, Dalhousie Square	... ditto
173	Sutcliffe, H W	...	Manager, Barlow & Co	...	37, Strand Road	... ditto
174	Swan, Peter	...	Partner, Landale & Clark	...	12, Clive Row	... ditto
	T					
175	Taylor, W H	...	Assistant Manager, King, Hamilton & Co.		7, Hare Street	... Christian

No.	Names.	Style or Calling.	Residence or place of business.	Religion.	Remarks.
	T				
176	Thomas, R A C	... Manager for India, Pelican and British Empire Life Office.	12, Dalhousie Square ...	Christian	
177	Thomas, R J P	... Partner, J Thomas & Co ...	8, Mission Row ...	ditto	
178	Thornton, E	... Architect, Martin & Co ...	Jackson House ...	ditto	
179	Topping, A	... Assistant, Macneill & Co ...	2, Clive Ghât Street ...	ditto	
180	Toynbee, R R	... Assistant, Kilburn & Co ...	4, Fairlie Place ...	ditto	
181	Traill, T	... Partner, O. Steel & Co ...	14, Old Court House Street ...	ditto	
182	Treble, H A T	... Superintendent, Loans and Discount, Bank of Bengal.	Strand ...	ditto	
183	Tremearne, S	... Proprietor and Editor, *Capital* ...	98, Clive Street ...	ditto	
184	Trevor, M	... Partner, Carritt, Moran & Co ...	9, Mission Row ...	ditto	
185	Turner, J	... Partner, Hoare, Miller & Co ...	38, Strand ...	ditto	
	W				
186	Walker, G W	... Partner, H D Cartwright & Co ...	13, Clive Street ...	Christian	
187	Wallis-Whiddett, F G	... General Manager, Cutler, Palmer & Co.	1, Hastings Street ...	ditto	
188	Walmsley, W H	... Firm of Kellner & Co ...	32, Chowringhee Road ...	ditto	
189	Warrington, W	... Signs the firm of Finlay, Muir & Co	1, Clive Street ...	ditto	
190	West, J D	... Partner, J Thomas & Co ...	8, Mission Row ...	ditto	
191	Wibley, C T	... Partner, Cooke & Kelvey ...	20, Old Court House Street ...	ditto	
192	Williamson, R L	... Partner, Williamson, Magor & Co ...	4, Mangoe Lane ...	ditto	
193	Wilson, A D	... Assistant, George Henderson & Co ...	100, Clive Street ...	ditto	
194	Wilson, J C	... Managing Editor, *Indian Daily News*	19, British Indian Street ...	ditto	
195	Wood, H	... Secretary to Agent, E I R ...	E I R House ...	ditto	
196	Wood, Herbert D	... Sub-Manager, The Arracan Co, Ld ...	28, Dalhousie Square ...	ditto	
197	Woodhouse, E A	... Partner, W. S. Cresswell & Co ...	10, Hare Street ...	ditto	
198	Wright, E J	... Manager, Delhi and London Bank, Limited.	4, Council House Street ...	ditto	
	Y				
199	Yule, Andrew	... Partner, Andrew Yule & Co ...	7, Clive Row ...	Christian	
200	Yule, David	... Ditto ...	Ditto ...	ditto	

	A			
201	Acharya, Satish Chandra ...	Professor, Presidency College ...	College Square ...	Hindu
202	Addy, Behary Lall (Rai Sahib).	Head Assistant, Office of Superintending Engineer, Public Works Department, Bengal, South-Western Circle.	Writers' Buildings ...	ditto
203	Agarwalla, Chotoorbhooj ...	Merchant ...	18, Armenian Street ...	ditto
204	Agurwalla, Luchmeechand	Ditto ...	4, Muddon Mohun Chatterjee's Lane.	ditto
205	Ahmad Shams-ul-Ulama ...	Head Maulvi, Calcutta Madrassa ...	Calcutta Madrassa ...	Muhammadan
206	Ariff, Gholam Hossain ...	Merchant ...	Amratolla Lane ...	ditto
	B			
207	Bagchee, Annada Prosad ...	Head Master, Government School of Art.	Chowringhee ...	Hindu
208	Banerjee, Gungadhur, MA	Proprietor, New Indian School ...	159 & 160, Cornwallis Street	ditto
209	Banerjee, Hridya Chandra	Education Department, Presidency College.	College Square ...	ditto
210	Banerjee, Jamini Nath ...	Principal, Calcutta Deaf and Dumb School.	4, College Square ...	ditto
211	Banerjee, Kherode Gopal ...	Merchant ...	13, Fordyce's Lane ...	ditto
212	Bhattacharjee, Kali Prasanna.	Professor, Presidency College ...	College Square ...	ditto
213	Bhattacharjee, Narayan Chunder.	Bengali Translator to Government ...	Writers' Buildings ...	ditto
214	Bose, Atul Krishna ...	Inspector, Standard Oil Co of New York.	Sukea's Street ...	ditto
215	Bose, Benode Behary ...	Zamindar ...	Bag Bazar ...	ditto
216	Bose, Bolye Chunder ...	Inhabitant ...	7, Gopal Chunder's Lane, Colootollah.	ditto
217	Bose, Boykanto Nath (Rai Bahadur).	Bullion-keeper, Mint ...	Strand ...	ditto
218	Bose, Girindra Nath ...	Zamindar ...	Harrison Road ...	ditto
219	Bose, Girish Chunder ...	Proprietor and Principal, Bangabashi College.	Bow Bazar ...	ditto
220	Bose, Gopal Chunder ...	Merchant ...	Bose's Lane, Colootollah ...	ditto
221	Bose, Dr. Jagadis Chandra, CIE	Education Department, Presidency College.	College Square ...	Theist

No.	Name	Style or Calling.	Residence or place of business.	Religion.	Remarks.
	B				
222	Bose, Khogendro Nath ...	Assistant, Kettlewell, Bullen & Co ...	21, Strand Road ...	Hindu	
223	Bose, Khudiram ...	Proprietor and Principal, Central College.	71-2, Cornwallis Street ...	ditto	
224	Bose, Kunja Behari ...	Personal Assistant to Director of Public Instruction, Bengal.	Writers' Buildings ...	ditto	
225	Bose, Poshoopoti Nath ...	Zamindar ...	Bag Bazar ...	ditto	
226	Bysack, Lall Behary ...	Landholder ...	3 & 3-1, Bysack's Lane ...	ditto	
	C				
227	Chatterjee, Pramatha Nath, MA.	Professor, Duff College ...	74, Nimtollah Ghât Street ...	Hindu	
228	Chatterjee, Preonath ...	Landholder ...	6, Mudon Mohan Chatterjee's Lane.	ditto	
229	Chatterjee, Ramani Mohon, MA.	Collector, Municipal Office ...	Municipal Office ...	Brahmo	
230	Chatterjee, Shashendra Bhushan.	Landholder ...	34-1, Beadon Street ...	Hindu	
231	Chowdhry, Bunwari Lall, BA, BSC. (Edin).	Zamindar ...	282, Upper Chitpur Road ...	ditto	
232	Chowdhry, Chandi Charan	Ditto ...	18-1, Jaun Bazar Street ...	ditto	
233	Chowdhry, Prosonno Coomar	Ditto ...	Ditto ...	ditto	
234	Chowkhany, Ramdeo ...	Banian and Merchant ...	Harrison Road ...	ditto	
235	Chunder, Soobul Chand ...	Firm of S C Chunder & Co ...	2, Radha Bazar Lane ...	ditto	
	D				
236	Das, Amarnath ...	Assistant Engineer, Circular and Eastern Canals Division.	Writers' Buildings ...	ditto	
237	Das, Amrita Nath ...	Zamindar ...	Jaun Bazar Street ...	ditto	
238	Dass, Saroda Prasanna ...	Professor, Presidency College ...	College Square ...	ditto	
239	Dass Gupta, Jogendro Nath	Education Department, Presidency College.	Ditto ...	ditto	
240	De, H N ...	Ditto ...	Ditto ...	ditto	
241	Deb, Kumar Roopendra Krishna.	Landholder ...	Raja Nobokissen's Street ...	ditto	

242	Dey, Gouri Sunkur, MA.	...	Professor, General Assembly's Institution.		Cornwallis Square	...	ditto
243	Dey, Hem Chunder, MA.	...	Professor, Bethune College	...	181, Cornwallis Street	...	ditto
244	Dey, Preo Lall	...	Landholder	...	4, Beadon Street	...	ditto
245	Dutt, Bejoy Kissen	...	Zamindar	...	Hatkhola	...	ditto
246	Dutt, Dhirendro Nath	...	Banian, Ralli Brothers	...	Cornwallis Street	...	ditto
247	Dutt, Hurry Dhone	...	Merchant	..	3, Shib Kristo Daw's Lane	...	ditto
248	Dutt, Jogesh Chunder	...	Landholder	...	Wellington Square	...	ditto
249	Dutt, Khetter Chunder	...	Deputy Bullion-keeper, Calcutta Mint		Strand	...	ditto
	G						
250	Ganguli, Kumode Prokash		Zamindar	...	12, Prasanna Coomar Tagore's Street.		Hindu
251	Ganguli, Nalin Prakash	...	Ditto	...	Ditto		ditto
252	Ganguli, Satya Persad	...	Ditto	...	6, Dwarka Nath Tagore's Street.		ditto
253	Ganguli, Sesh Prokash	...	Ditto	...	12, Prasanna Coomar Tagore's Street.		ditto
254	Ghatak, M K	...	Assistant Comptroller-General	...	The Treasury	...	ditto
255	Ghose, Aukshoy Coomar	...	Zamindar	...	3, Jorabagan Street	...	ditto
256	Ghose, Baroda Prosad	...	Education Department, Presidency College.		College Square	...	ditto
257	Ghose, Ganendra Chunder		Landholder	...	1, Simla Street	...	Christian
258	Ghose, Hurro Cally	...	Assistant, Kettlewell, Bullen & Co	...	21, Strand	...	Hindu
259	Ghose, Isan Chunder	...	Head Master, Hare School	...	College Square	...	ditto
260	Ghose, Jnan Chandra, MA.		Professor, Duff College	...	74, Nimtollah Ghat Street	...	ditto
261	Ghose, Kali Prosono	...	Landholder	...	Jorabagan Street	...	ditto
262	Ghose, Kali Prosono	...	Ditto	...	75, Beadon Street	...	ditto
263	Ghose, Monmohan	...	Education Department, Presidency College.		College Square	...	Theist
264	Ghose, Motilal	...	Editor, *Amrita Bazar Patrika*	...	2, Ananda Chunder Chatterjee's Lane, Bagbazar.		Hindu

No.	Names.	Style or Calling.	Residence or place of business.	Religion.	Remarks.
	G				
265	Ghose, Saroda Prosad, MA,	Head Master, Metropolitan Institution	Sanker Ghose's Lane ...	Hindu	
266	Ghose, Sarut Chunder	Landholder ...	Baranussy Ghose's Street, Jorasanko.	ditto	
267	Goenka, Mooralydhar ...	Inhabitant ..	Banstolla Street ...	ditto	
268	Goenka, Ram Kumar ...	Zamindar and Merchant ...	4, Sovaram Bysak's Lane ...	ditto	
269	Goho, Hari Charan ..	Zamindar ...	Musjeedbaree Street ...	ditto	
270	Goho, Khetter Churn .	Banian ...	85, Cornwallis Street ...	ditto	
271	Gosain, Hem Chundra ...	Landholder ...	Park Street ...	ditto	
272	Gupta, Balmookund ...	Editor, *Bharat Mihir* ..	Mooktaram Babu's Street ...	ditto	
273	Gupta, Gopal Chunder ...	Landholder and Merchant ...	5, Middleton Street ...	ditto	
274	Gupta, Nanda Lall ...	Ditto ...	Gupta's Lane, Jorasanko ...	ditto	
	J				
275	Jalan, Joylall .	Partner, Ramnarayan Joylall ...	Cotton Street ...	Hindu	
	K				
276	Kar, Radharaman ...	Landholder ...	107, Sham Bazar Street ...	Hindu	
277	Karforma, Surja Kumar, MA.	Professor, Duff College ...	74, Nimtollah Ghat Street ...	ditto	
278	Khan, Kanailal ...	Merchant and Landholder ...	81, Durmahatta Street, Hatkhola.	ditto	
	L				
279	Laik, Mukunda Lal ...	Partner, M. L. Laik & Banerjee & Banerjee & Co.	7, Swallow Lane ..	Hindu	
280	Law, Ambica Churn ...	Merchant ...	Sukea's Street ...	ditto	
281	Law, Chandi Churn ...	Ditto ...	Cornwallis Street, Tuntunia ...	ditto	
282	Law, Gaur Mohan ...	Ditto ...	Sukea's Street ...	ditto	
283	Law, Goocoi Chandra ...	Ditto ...	Tuntunia ...	ditto	
284	Law, Hari Mohan ...	Landholder ...	92, Mooktaram Babu's Street	ditto	
285	Law, Maharaj Kumar Kristo Das.	Merchant ...	Tuntunia ...	ditto	
286	Law, Maharaj Kumar Resheekesh.	Ditto ...	ditto ...	ditto	

287	Maitra, Herumbo Chunder, MA	Professor, City College	...	13, Mirzapore Street	...	Brahmo
288	Mehta, R D, CIE ...	Partner, D B Mehta & Co	...	55, Canning Street	...	Parsee
289	Mirza, Shajaut Ali, Khan Bahadur.	Landholder	...	7, Rawdon Street	...	Muhammadan
290	Mitter, Amrito Nath (Rai Bahadur).	Zamindar	...	33, Mooktaram Babu's Street		Hindu
291	Mitter, J C ...	Deputy Comptroller, India Treasuries		The Treasury	...	ditto
292	Mitter, Kumar Monmotho Nath.	Landholder	..	Jhamapukur Lane	...	ditto
293	Mitter, Kumar Norendro Nath.	Ditto	...	ditto	...	ditto
294	Mitter, N G ...	Partner, J A Dykes & Co	...	102, Clive Street	...	ditto
295	Mitter, Protap Chand ...	Zamindar	...	7-4, Beadon Street	...	ditto
296	Mitter, P N ...	Ditto	...	Ashcroft Hall, Raj Bullub's Street		ditto
297	Mitter, Roy Bepin Behary	Landholder	...	226, Upper Circular Road	...	ditto
298	Mitter, Roy Promotho Nath	Ditto	...	ditto	...	ditto
299	Mitter, Sarat Chunder ...	Zamindar	...	12, Shib Narain Dass' Lane		ditto
300	Mitter, Sharat Chunder ...	Ditto	...	98, Machua Bazar Street	...	ditto
301	Mitter, Shotish Chunder ..	Inhabitant	...	20, Raja's Lane	...	ditto
302	Mohalanobis, Subodh Chandra.	Professor, Presidency College	...	College Square		Theist
303	Mookerjee, Adhar Chandra	Education Department, Presidency College.		ditto	...	ditto
304	Mookerjee, Adhar Chunder	Professor, General Assembly's Institution.		Cornwallis Square	...	Hindu
305	Mookerjee, Aditya Nath ...	Professor, Presidency College	...	College Square	...	ditto
306	Mookerjee, Annoda Prosonno	Landholder	...	Ripon Street	...	ditto
307	Mookerjee, Bejoy Gopal, MA	Professor, Bethune College	...	181, Cornwallis Street	...	ditto
308	Mookerjee, Girish Chandra, MA	Assistant Registrar, Calcutta University.		Senate House	...	ditto

No.	Names.	Style or Calling.	Residence or place of business.	Religion	Remarks.
	M				
309	Mookerjee, Jaladhi Chandra	Zamindar	... 12, Prasanna Coomar Tagore's Street.	Hindu	
310	Mookerjee, Jnanendra Chandra, MA	Professor, Duff College	... 74, Nimtollah Ghât Street ...	ditto	
311	Mookerjee, Nara Nath ...	Assistant, Graham & Co	... 9, Clive Street ...	ditto	
312	Mookerjee, Rajendra Nath	Partner, Martin & Co	... 20, Beadon Street ...	ditto	
313	Mookerjee, Syama Das ...	Professor, Presidency College	... College Square ...	ditto	
314	Mullick, Charoo Chunder ...	Landholder	... Putuldanga ..	ditto	
315	Mullick, Narendro Nath ...	Assistant, Kerr, Tarruck & Co	... 11, Clive Street	ditto	
316	Mullick, N ...	Landholder	... Dhurrumtollah ...	ditto	
317	Mullick, Promotho Nath ...	Ditto	... Pathuriaghatta Street ...	ditto	
	N				
318	Neyogi, Hariah Chandra ...	Landholder	... Bag Bazar ...	Hindu	
	P				
319	Paul, Radha Churn ...	Landholder	... Baranushee Ghose's Street ...	Hindu	
320	Paul, Srinath (Rai Bahadur)	Sole Proprietor, Y. Artin & Co	... 43, Radha Bazar Street ...	ditto	
	R				
321	Roy Chowdhury, Manmatha Nath.	Zamindar	... 35-2, Beadon Street ...	Hindu	
322	Roy Chowdhury, Promotho Nath.	Ditto	... 35-2, Beadon Street ...	ditto	
323	Roy Chowdhry, Soorja Kanto	Ditto	... 112, Amherst Street ...	ditto	
324	Roy, Kali Narain ...	Manager to Paikpara Raj Estate	... 19-4, Mudden Mitter's Lane ...	Brahmo	
325	Roy, Khogendra Nath ...	Inhabitant	... Jagadish Nath Roy's Lane, Simla.	Hindu	
326	Roy, Kumar Denendra Narain.	Ditto	... 1, Gupta's Lane, Jorasanko ...	ditto	

327	Roy, Muralidhur	...	Inhabitant	...	Hatkhola	...	ditto
328	Roy, Parbutty Sanker	...	Zamindar	...	44, European Asylum Lane	...	ditto
329	Roy, Peary Mohun	...	Ditto	...	Amherst Street	...	ditto
330	Roy, P K	...	Offg. Principal, Presidency College	...	College Square	...	Theist
331	Roy, Sita Nath (Rai Bahadur).		Merchant	...	68, Sova Bazar Street	...	Hindu

S

332	Seal, Dunialall	...	Zamindar	...	83, Upper Chitpur Road	...	Hindu
333	Seal, Guru Dass	...	Banian	...	17, Muktaram Babu's Street		ditto
334	Seal, Kundun Lall	...	Zamindar	...	19-1, Muktaram Babu's Street.		ditto
335	Seal, Mohun Lal	...	Banian, Gladstone, Wyllie & Co	...	101, Clive Street	...	ditto
336	Seal, Sham Lall	...	Zamindar	...	19-1, Muktaram Babu's Street.		ditto
337	Seal, Sreedam Chunder	...	Firm of Gosto Behary Seal	...	28-1, Serpentine Lane	...	ditto
338	Sein, Wooma Kanto	...	Partner, Tacoor Dass Sein and Raj Narain Dhur.		6, New China Bazar Street	...	ditto
339	Sen, Atal Coomar	...	Landholder	...	10, Rajender Nath Sen's Lane		ditto
340	Sen, Benoyendra Nath	...	Education Department, Presidency College.		College Square	...	Brahmo
341	Sen, Gopi Bhusan	...	Demonstrator, Presidency College	...	College Square	...	Hindu
342	Sen, Pareah Nath, BA	...	Professor, Bethune College	...	181, Cornwallis Street	...	ditto
343	Sen, Sunut Coomar	...	Banian, Bengal Bonded Warehouse Association.		102, Clive Street	...	ditto
344	Sett, Ram Lal	...	Zamindar	...	Bara Bazar	...	ditto
345	Shastri, Hara Prosad	...	Principal, Sanskrit College	...	College Square	...	ditto
346	Shastri, Rajendra Chandra (Rai Bahadur).		Librarian, Bengal Library	...	Writers' Buildings	...	ditto
347	Siddiq, Abul Khair Mahomed (Shams-ul-ulama).		Education Department, Presidency College.		College Square	...	Muhammadan

No.	Names.	Style or Calling.	Residence or place of business.	Religion.	Remarks.
	S				
348	Singh, Bijoy Chunder ...	Landholder ...	147, Baranussy Ghose's Street	Hindu	
349	Singh, Hem Chunder ...	Zamindar ...	145, ditto ...	ditto	
350	Singh, Jogesh Chunder ...	Landholder ...	85, Upper Circular Road ...	ditto	
351	Sircar, Annoda Prosad (Rai Sahib).	Executive Engineer, 2nd Calcutta Division.	Writers' Buildings ...	ditto	
352	Sircar, Birendra Nath ...	Assistant, Kerr, Tarruck & Co ...	11, Clive Street ...	ditto	
	T				
353	Tagore, Abanindra Nath ...	Zamindar ...	6, Dwarkanath Tagore's Street	Hindu	
354	Tagore, Gayanendra Nath...	Ditto ...	6, ditto ...	ditto	
355	Tagore, Hitendra Nath ...	Ditto ...	6, ditto ...	ditto	
356	Tagore, Joytirindra Nath ...	Ditto ...	6, ditto ...	ditto	
357	Tagore, Khiteendra Nath ...	Ditto ...	6, ditto ...	ditto	
358	Tagore, Ranendra Mohan ...	Ditto ...	11, Pathuriaghatta Street ...	ditto	
359	Tagore, Robindro Nath ...	Ditto ...	6, Dwarkanath Tagore's Street	ditto	
360	Tagore, Samarendra Nath...	Ditto ...	6, ditto ...	ditto	
361	Tagore, Surendra Nath ...	Merchant and Landholder ...	6, ditto ...	ditto	
362	Trivedi, Ramendra Sunder, MA	Principal, Ripon College ...	60, Mirzapore Street ...	ditto	
	V				
363	Vidyaratna, Narayan Chandra.	Landholder ...	25, Sukea's Street ...	Hindu	

W. R. FINK,

Registrar and Clerk of the Crown.

REGISTERED No. C209.]

No. 17 of 1905.

SUPPLEMENT TO

The Calcutta Gazette.

WEDNESDAY, APRIL 26, 1905.

OFFICIAL PAPERS.

[Non-Subscribers to the GAZETTE *may receive the* SUPPLEMENT *separately on payment of five rupees per annum if delivered in Calcutta, or seven rupees and eight annas if sent by post.]*

CONTENTS.

	Page.
RESOLUTION on the Howrah Bridge Budget Estimate for the year 1905-1906	613
Weather and Crop Report for the week ending the 26th April 1905	615
Prices-current (retail and wholesale) of food-grains and salt in the head-quarters station bazars of the districts of Bengal on the 15th April 1905	620
Circular and Eastern Canals for the week ending Saturday the 22nd April 1905	626
Area leased for Irrigation up to end of February 1905 ...	627
Irrigation Operations of Fasl Kharif, 1904-1905	629
Vital Statistics of Districts and Towns in Bengal for the month of January 1905	630
RESULTS of the Meteorological Observations taken at the Alipore Observatory from 16th to 22nd April 1905	632
East Indian Railway during the four weeks ending 28th January 1905	633
Eastern Bengal State Railway during the month of January 1905	635
Bengal-Nagpur Railway during the month of January 1905	637
Bengal and North-Western Railway for the month of January 1905	639
Weekly Return of Traffic Receipts on Indian Railways ...	641

RESOLUTION ON THE HOWRAH BRIDGE BUDGET ESTIMATE FOR THE YEAR 1905-1906.

No. 741Marine.

Government of Bengal.

MARINE DEPARTMENT.

Dated Calcutta, the 25th April 1905.

RESOLUTION.

Howrah Bridge Budget Estimate for the year 1905-06.

READ—

Letter No. 8263 of 30th March 1905, from the Vice-Chairman of the Commissioners of the Port of Calcutta, forwarding the Budget Estimate of the Howrah Bridge for the year 1905-06.

RECEIPTS.

The total receipts for the year 1905-06 have been estimated at Rs. 1,88,594 as against Rs. 1,64,125 of the previous year, showing an increase of Rs. 24,469.

The increase in income is principally in the item of receipts from Railway traffic which has been fixed at Rs. 1,70,000 as against Rs. 1,47,500 in the estimate for 1904-05, and an appropriation of Rs. 2,000 from the Port Trust Revenues to the Bridge for the use of the steamer *Helvetia*, as this vessel is often employed for Port Trust purposes.

EXPENDITURE.

2. The expenditure has been estimated at Rs. 1,87,409 against Rs. 1,72,625 for 1904-05. The increase is chiefly under the heads "Maintenance and Repairs" and "Stores." Under "Maintenance and Repairs" there is an increase of Rs. 13,000, of which Rs. 9,800 is in respect of the upkeep of the Bridge proper and Rs. 2,000 for the ferry steamers, this item having been underestimated last year when provision for repairs to the vessels was made for the first time. The increase under the head "Stores" is in respect of three items and being small does not call for any special remarks.

3. As the net result, there is an estimated surplus of Rs. 1,185 against a deficit of Rs. 8,500 in the preceding year.

4. The Lieutenant-Governor sanctions the estimate under section 21 of Act IX (B.C.) of 1871.

By order of the Lieutenant-Governor of Bengal,

W. A. INGLIS,

Secretary.

WEATHER AND CROP REPORT.

For the week ending the 24th April 1905.

Burdwan.—Rainfall at Sadar 0·27, Kalna 0·15, Katwa 1·95, Raniganj nil. Ploughing going on. Weather seasonable. Fodder and water sufficient. Cattle-disease still reported from Kalna and Raniganj. Common rice sells as follows :—

	Srs.	ch.	
Sadar	14	4	per rupee.
Kalna	12	13	
Katwa	14	10	
Raniganj	16	0	

Birbhum.—Rainfall at Sadar nil, Rampur Hât report not received. Weather seasonable. Sugarcane-pressing continues. Fodder and water sufficient. Common rice sells as follows :—

	Srs.	ch.	
Sadar	15	0	per rupee.
Rampur Hât	16	0	

Bankura.—Rainfall at Sadar 0·16, Vishnupur nil. Sugarcane cultivation going on. Grounds being made ready for paddy. No cattle-disease. Fodder and water sufficient. Common rice sells as follows :—

	Srs.	ch.	
Sadar	16	0	per rupee.
Vishnupur	16	0	

Midnapore.—Rainfall at Contai 0·11. Land being prepared for early rice. Wheat being harvested. Summer rice and spring crops thriving. Fodder and water sufficient. Cattle-disease reported from Tamluk and Heria police-stations. Common rice sells as follows :—

	Srs.	ch.	
Sadar	15	0	per rupee.
Contai	18	0	
Tamluk	14	0	
Ghatal	14	0	

Hooghly.—Rainfall at Sadar 0·10, Serampore 0·02, Arambagh nil. Weather seasonable. Lands being ploughed for jute and paddy. No cattle-disease. Fodder and water sufficient. Common rice sells as follows :—

	Srs.	ch.	
Sadar	12	0	per rupee.
Serampore	11	3	
Arambagh	13	8	

Howrah.—Rainfall at Sadar 0·26. Cultivation of sugarcane is going on. Jute seeds have been sown in some places. Preparation of soil for paddy on the increase. Fodder and water for cattle sufficient. Coarse rice sells at 13 seers per rupee both at Sadar and Uluberia.

24-Parganas.—Rainfall at Sadar 0·38, Barasat nil, Barrackpore 0·09, Basirhat nil, Diamond Harbour 0·24. Weather seasonable. State and prospects of standing crops fair. Preparation of lands for early rice and jute still continues. Common rice sells at 11¼ seers per rupee. Condition of cattle good Supply of fodder and water sufficient.

Nadia.—Rainfall at Sadar 0·83, Meherpur 0·10, Ranaghat 0·35, Chuadanga and Kushtia nil. Weather cloudy and variable; hailstorm on the 21st. No standing crops. Sowing of early paddy has commenced in Sadar, Kushtia and Ranaghat subdivisions and parts of Chuadanga. The recent rain has facilitated ploughing operations. Fodder and water sufficient. No cattle-disease reported. Common rice sells as follows :—

	Srs.	ch.	
Sadar	13	0	per rupee.
Kushtia	14	8	
Meherpur	11	0	
Chuadanga	13	0	
Ranaghat	13	0	

Murshidabad.—Rainfall at Lalbagh nil, Kandi 0·25, Jangipur nil, Sadar report not received. Weather seasonable. Harvesting of spring crops finished. Sowing of early rice continues. Lands being prepared for winter rice. No cattle-disease. No want of fodder and water. Common rice sells as follows:—

	Srs.	ch.	
Sadar	13	0	per rupee
Kandi	15	0	per rupee
Jangipur	15	0	per rupee
Lalbagh	13	0	per rupee

Jessore.—Rainfall at Sadar 0·33, Jhenida 0·02, Magura 1·87, Narail 0·10. Weather seasonable. Ploughing going on. Fodder and water sufficient. Common rice sells as follows:—

	Srs.	ch.	
Sadar	15	0	per rupee.
Jhenida	13	8	per rupee.
Magura	13	0	per rupee.
Narail	13	12	per rupee.
Bangaon	Not reported.		

Khulna.—Rainfall at Sadar 0·27, Bagerhat 0·08, Satkhira nil. Weather warmer. Lands are being prepared for autumn rice. State of summer rice favourable. Jute-sowing estimated at 25 per cent. No cattle-disease. Fodder and water sufficient. The outturn of tobacco is estimated to be 92 per cent. and that of linseed 100. Common rice sells as follows:—

	Srs.	ch.	
Sadar	16	0	per rupee.
Bagerhat	16	0	per rupee.
Satkhira	13	0	per rupee.

Rajshahi.—Rainfall at Sadar ·42, Nator ·21, Naugaon ·26. Weather close and cloudy with occasional storms. Harvesting of spring crops finished. Outturn nine annas. Paddy, sugarcane and jute promising. No cattle-disease. Fodder and water sufficient. Common rice sells as follows:—

	Srs.	ch.	
Sadar	14	0	per rupee.
Nator	13	0	per rupee.
Naogaon	15	0	per rupee.

Dinajpur.—Rainfall at Sadar 0·71, Balurghat ·75, Thakurgaon ·19, slight at other stations. Weather seasonable. State of standing crops fair. Sowing of jute and autumn crops commenced. Fodder and drinking-water sufficient. No cattle-disease. Common rice sells as follows:—

	Srs.	ch.	
Sadar	14	8	per rupee.
Balurghat	14	0	per rupee.
Thakurgaon	13	0	per rupee.

Jalpaiguri.—Rainfall at Sadar 2·26. Weather seasonable. Harvesting of tobacco finished. Sowing of autumn paddy and jute going on. Fodder and water sufficient. Common rice sells at 14½ seers per rupee.

Darjeeling.—Rainfall at Sadar 1·40. Weather seasonable. *Hills*—Wheat and barley being harvested. Maize and potato doing well. *Terai*—Ploughing for jute and autumn crops going on. Coarse rice sells as follows:—

	Srs.	ch.	
Hills	9	0	per rupee.
Terai	14	0	per rupee.

Maize sells at Darjeeling at 13 and at Kalimpong at 14 seers per rupee.

Rangpur.—Rainfall at Sadar ·84, Nilphamari 1·29, Kurigram 1·02, Gaibanda 1·20. Weather seasonable. Sowing of jute going on. Prospect of standing crops fair. Common rice sells as follows:—

	Srs.	ch.	
Sadar	13	0	per rupee.
Gaibanda	13	0	per rupee.
Kurigram	15	0	per rupee.
Nilphamari	14	8	per rupee.

Bogra.—Rainfall at Sadar 0·20. Slight fall everywhere. Weather occassionally cloudy. Harvesting of sugarcane finished; outturn 90 per cent. Cultivation of lands for early rice and jute continues and sowing going on in places. Fodder and water sufficient. Common rice sells at 14½ seers per rupee.

Pabna.—Rainfall at Sadar nil, Sirajganj 2·0. Weather partially cloudy. Prospects of standing crops good. Paddy and jute being sown. No cattle-disease. Common rice sells at 12½ seers per rupee.

Dacca.—Rainfall at Sadar 2·10. Fall general. Prospects of crops good. Weather seasonable. Fodder available. No cattle-disease. Common rice sells as follows:—

	Srs. ch.	
Sadar	15 0	per rupee.
Manikganj	13 0	
Munshiganj	14 0	
Narayanganj	14 0	

Mymensingh.—Rainfall at Sadar 0·49, Jamalpur 1·27, Kishorganj 1·31, Netrakona 0·72, Tangail 2·62. Weather seasonable. Condition of rice fair. Sowings of autumn and winter rice and jute continue. Fodder and water sufficient. No cattle-disease. Common rice sells as follows:—

	Srs. ch.	
Sadar	15 0	per rupee.
Jamalpur	16 0	
Kishorganj	14 12	
Netrakona	17 0	
Tangail	15 0	

Faridpur.—Rainfall at Sadar 1·51, Goalundo 0·75, Madaripur 0·70. Weather seasonable. Sowing of jute and early rice continues. Prospects of jute favourable. No cattle-disease. Water and fodder sufficient. Common rice sells at 12½ seers a rupee.

Backergunge.—Rainfall at Sadar 0·53. Fall general. Weather cloudy with occasional showers. Sowing of autumn rice continues. No cattle-disease. Fodder sufficient. Common rice sells at 13½ seers per rupee

Tippera.—Rainfall at Sadar 0·71, Brahmanbaria 2·00, and Chandpur 1·76. Weather seasonable. Prospects good. Sowing of *aman* and *aus* going on. Sowing of jute at Sadar and Brahmanbaria still continues. Rain has done slight damage to *til*, chilies and jute at Chandpur. No cattle-disease. Fodder and water sufficient. Common rice sells as follows:—

	Srs. ch.	
Sadar	13 0	per rupee.
Brahmanbaria	16 13	
Chandpur	14 0	

Noakhali.—Rainfall at Sadar 0·80, Feni 0·89. Weather seasonable. Prospects not good in Sadar subdivision Cultivation of lands for *aus* continues. Fodder and water sufficient. Cattle-disease reported. Common rice sells as follows:—

	Srs. ch.	
Sadar	14 0	per rupee.
Feni	16 0	

Chittagong.—Rainfall at Sadar 0·15. Weather seasonable. Lands being ploughed for *aus* crop. No cattle-disease. Fodder and water sufficient. Common rice sells at 14 seers per rupee at Sadar.

Chittagong Hill Tracts.—Rainfall at Sadar 0·36. Weather seasonable. *Jum* burning nearly finished. Cattle-disease continues. Common rice sells at 14 seers per rupee at Sadar.

Patna.—Rainfall at Sadar 0·13, Bihar 0·05, Hilsa 0·20. Weather getting hot. Threshing and winnowing of *rabi* going on. *Cheena* doing well. Fodder and water sufficient. No cattle-disease. Common rice sells as follows:—

	Srs. ch.	
Sadar	14 0	per rupee.
Bihar	14 0	
Barh		Not reported.
Dinapore		

Gaya.—Rainfall at Sadar 0·32. Weather hot, occasionally cloudy. Sugarcane and *china* (millet) doing well. Fodder and water sufficient. Common rice sells at 12½ seers per rupee.

Shahabad.—Rainfall at Sadar 0·17. Harvesting of *rabi* finished. Sugarcane being irrigated. Fodder and water abundant. Common rice sells at 14 seers per rupee at Sadar.

Saran.—Rainfall at Sadar 0·79, Sewan 0·77, Gopalganj 0·09. Weather unsettled. Threshing of *rabi* and weighment of opium going on. *Dhaena* is being sown. No cattle-disease. Fodder and water sufficient. Common rice and maize sell at 13½ and 19 seers per rupee respectively at Sadar.

Champaran.—Rainfall at Sadar 0·06, Bettiah 0·19. Harvesting of *rabi* continues. Paddy and *china* being sown in places. Lands being prepared for *bhadoi*. Prospects good. No cattle-disease. Fodder and water sufficient. Common rice and maize sell at 14½ and 21 seers per rupee respectively at Sadar.

Muzaffarpur.—Rainfall at Sadar 0·01, Hajipur 0·33, Sitamarhi 0·19. Weather seasonable but sometimes cloudy. Prospects of crops good. Fodder and water sufficient. No cattle-disease. Common rice and maize sell at 13 and 19 seers per rupee respectively at Sadar.

Darbhanga.—Rainfall at Sadar 0·03, Samastipur 0·2, Madhubani 0·10. Weather seasonable. Threshing of *rabi* crops in progress. Fodder and water sufficient. No cattle-disease Common rice sells as follows:—

	Srs. ch.	
Sadar	15 8	per rupee.
Samastipur	14 8	
Madhubani	14 15	

Monghyr.—Rainfall at Sadar 0·47. Weather warm, cool at night. Threshing of spring crops continues. Fodder and water sufficient. Common rice sells as follows:—

	Srs. ch.	
Sadar	13 4	per rupee.
Begusarai	14 0	

Bhagalpur.—Rainfall at Sadar 0·16, Madhipura 0·13. Weather seasonable, but cloudy with occasional showers in the latter part of the week. Harvesting of *rabi* crops nearly finished. Ploughing of land for next paddy crop in progress. *Moong* and paddy sowings on low lands in parts of North Bhagalpur going on. Cattle-disease reported from thanas Banka and Supaul. Fodder and water sufficient. Common rice sells as follows:—

	Srs. ch.	
Sadar	15 2	per rupee.
Banka	15 0	
Madhipura	17 0	
Supaul	17 0	

Purnea.—Rainfall at Sadar 1·95, Kishenganj 0·10, Arraria 0·17. Weather seasonable Sowing of jute, *bhadoi* crops and of *aghani* crops in low lands going on. No cattle-disease. Fodder and water sufficient. Common rice sells as follows:—

	Srs. ch.	
Sadar	12 0	per rupee.
Araria	14 0	
Kishanganj	12 0	

Malda.—Rainfall at Chanchal 0·93, Shibganj 0·04, Gomashtapur 0·01. Weather seasonable Gathering of *rabi* crops approaching completion. Sowing of *bhadoi* and jute going on. Rain much needed. Lands are being prepared for winter rice at places. No cattle-disease. Fodder and water available. Common rice sells at 13 seers per rupee at Sadar.

Sonthal Parganas.—Rainfall nil. Weather seasonable. *Mohua* being gathered. Sugarcane doing well. Outturn of *arahar* estimated at fifty per cent. Fodder and water sufficient. Common rice sells at 13 seers per rupee at Sadar.

Cuttack.—Rainfall at Sadar 0·09, Kendrapara 0·01. Weather seasonable. *Dalua* being harvested. Sugarcane being pressed. Fields being ploughed Condition of cattle generally good. Fodder and water sufficient. Common rice sells at 17$\frac{1}{16}$ seers per rupee at Sadar.

Balasore.—Rainfall at Sadar 0·45. Threshing of *saradh* and ploughing continue Sugarcane being planted. No cattle-disease. *Dalua* ripening. Fodder and water sufficient. Common rice sells as follows:—

	Srs.	ch.	
Sadar	17	0	per rupee.
Bhadrak	20	0	

Angul.—Rainfall at Phulbani 0·34. Weather seasonable. Cattle-disease reported from the interior. Fodder and water available. Common rice sells as follows :—

	Srs.	ch.	
Sadar	18	0	per rupee.
Khondmals	18	0	

Puri.—Rainfall at Sadar 0·20, Khurda 0·10. Weather seasonable, but sometimes cloudy. *Dalua*, *mung* and castor being harvested. Cotton and linseed flowering. Tobacco being reaped. Sugarcane getting on well. Condition of miscellaneous crops good. Lands being ploughed for ensuing paddy crop. Fodder and water sufficient. Common rice sells at 16¼ seers per rupee at Sadar.

Hazaribagh.—Rainfall nil. Weather hot. Cattle-disease reported from two thanas. Ploughing of land going on. *Mohua* dropping continues. Fodder and water sufficient. Common rice sells as follows :—

	Srs.	ch.	
Sadar	12	0	per rupee.
Giridih	13	0	

Marua and *makai* sell at 20 and 16 seers per rupee at Sadar.

Ranchi.—Rainfall at Sadar 0·32. Weather hot and cloudy. Ploughing and manuring vigorously going on. *Sawan* paddy doing well. Dropping of *mohua* in progress. Cattle-disease reported from three thanas. Fodder and water sufficient. Common rice sells as follows :—

	Srs.	ch.	
Sadar	13	0	per rupee.
Gumla	18	8	

Palamau.—Rainfall nil. Weather seasonable. Sugarcane doing well. Cattle-disease continues. Fodder and water sufficient. Common rice sells at 13¼ seers per rupee at Sadar.

Manbhum.—Rainfall nil. Weather seasonable. Prospects of crops good. Outturn of tobacco and sugarcane estimated at 70 and 75 per cent., respectively. Fodder and water sufficient. Cattle-disease reported from thana Gaurandi. Common rice sells as follows :—

	Srs.	ch	
Sadar	13	3	per rupee.
Gobindpur	12	0	

Singhbhum.—Rainfall at Sadar 0·03. Lands being prepared for cultivation. *Lac* being collected. Cattle-disease continues in thana Chakradharpur. Fodder and water sufficient. Common rice sells at 14 seers per rupee.

General Summary.—Rainfall during the week was fairly general and in places moderately heavy. Preparation of lands for winter rice and autumn crops going on. Prospects fair. Cattle-disease reported from 11 districts. Fodder and water sufficient. The price of common rice has risen in eleven districts and fallen in six.

By order of the Lieutenant-Governor of Bengal,

R. W. CARLYLE,

Offg. Chief Secretary to the Govt. of Bengal.

REVENUE DEPARTMENT,

The 25th April 1905.

PRICES-CURRENT (retail) of Food-grains and Salt in the Head-quarters

Number.	DISTRICTS.	QUANTITIES PER RUPEE IN														
		WHEAT.			BARLEY.			RICE, COMMON.			JOWAR OR CHOLUM (*Sorghum Vulgare*).		
		Present return.	Next preceding return.	Corresponding return of last year.	Present return.	Next preceding return.	Corresponding return of last year.	Present return.	Next preceding return.	Corresponding return of last year.	Present return.	Next preceding return.	Corresponding return of last year.
	BENGAL	S. Ch.	S. Ch.	S. Ch.	S. Ch.	S. Ch.	S. Ch.	S. Ch.	S. Ch.	S. Ch.	S. Ch.	S. Ch.	S. Ch.
BURDWAN DIVISION.	1 Burdwan ..	13 0	13 8	13 6	...	...	...	14 4	14 4	13 8	...	...	...
	2 Birbhum ...	13 8	12 0	14 4	...	...	..	15 0	15 0	13 8	...	..	...
	3 Bankura ..	14 0	13 8	15 0	...	...	...	16 0	16 0	15 0	...	.	...
	4 Midnapore ...	9 0	9 0	12 0	...	...	...	16 8	16 8	15 0	...	...	...
	5 Hooghly ...	7 8	7 8	12 0	...	...	...	9 8	9 8	10 0	...	...	...
	6 Howrah ...	...	...	13 4	...	...	20 0	13 0	12 4	12 0	...	..	...
PRESIDENCY DIVISION.	7 24-Parganas ...	...	...	.	...	...	...	11 0	12 0	12 0	...	...	...
	8 Calcutta ...	10 10	10 10	11 0	14 0	15 0	16 0	9 0	9 0	9 10	15 0	14 0	17 0
	9 Nadia ...	14 4	14 9	15 0	18 4	17 12	20 0	12 13	12 13	12 8	...	...	...
	10 Murshidabad ..	15 0	14 0	18 0	24 0	26 0	22 0	14 0	14 0	13 8	...	...	...
	11 Jessore ...	9 0	9 0	10 12	Country. 15 0 / Patna 11 4	Country. 15 8 / Patna 11 4	Country. 18 0 / Patna 13 0	14 4	14 0	16 0	...	...	...
	12 Khulna ...	...	...	...	...	...	...	16 0	16 0	16 0	...	...	...
RAJSHAHI DIVISION.	13 Rajshahi ...	15 0	15 0	17 13	26 4	26 4	27 0	12 12	12 13	14 4	...	...	...
	14 Dinajpur ...	12 0	12 0	13 4	...	...	...	16 0	15 0	15 9	...	...	...
	15 Jalpaiguri ...	10 0	11 0	11 0	...	...	...	12 8	13 0	14 0	...	...	...
	16 Darjeeling ...	...	...	...	...	...	...	11 8	11 8	12 8	...	...	...
	17 Rangpur ...	13 4	13 4	11 6	.	...	...	13 0	13 0	14 10	...	...	...
	18 Bogra ...	11 4	11 4	14 1	...	...	...	14 4	14 4	15 12	...	...	...
	19 Pabna ...	16 8	15 0	18 12	27 0	26 0	27 0	12 12	12 15½	16 2	...	...	...
DACCA DIVISION.	20 Dacca ...	14 0	14 0	16 0	24 0	24 0	23 0	15 8	15 8	16 0	...	...	...
	21 Mymensingh ...	13 8	12 8	12 8	10 10	11 6	12 0	15 0	14 0	15 0	...	...	...
	22 Faridpur ...	20 0	20 0	20 0	26 0	26 0	26 0	12 0	12 8	15 8	...	...	...
	23 Backergunge ...	...	...	...	...	...	...	13 8	13 8	15 0	...	...	...

A. In the subdivisions the retail prices of salt per rupee are—Kalna 15½ seers; Katwa 14 seers 15½ chittaks; Ranigunj 16 seers.
B. At Rampur Hât the retail price of salt is 15 seers per rupee.
C. At Vishnupur the retail price of salt is 17½ seers per rupee.
D. In the subdivisions the retail prices of salt per rupee are—Contai 14½ seers, Tamluk 16 seers; Ghatal 16 seers.
E. In the subdivisions the retail prices of salt per rupee are—Serampore 15½ seers; Arambagh 12 seers 13 chittaks.
F. At Ulubaria the retail price of salt is 16 seers per rupee.
G. In the mofussil in the interior of the district the retail prices of salt per rupee are—Ghatia 13$\frac{6}{16}$ seers; Baraset 13 seers 5 chittaks; Basduria 13 seers 8 chittaks; Mograhat 16 seers, Barrackpore 13 seers.
H. In the subdivisions the retail prices of salt per rupee are—Kushtia 14 seers; Chuadanga 18½ seers (panga); Meherpur 12 seers, Ranaghat 14½ seers.
I. In the subdivisions the retail prices of salt per rupee are—Lalbagh 14 seers; Kandi 15 seers; Jangipur 16 seers.
J. In the subdivisions the retail prices of salt per rupee are—Jhenida 14 seers; Magura return not received; Bangaon 13 seers, Narail return not received.

SEERS OF 80 TOLAHS.

Bajra or Cumbu (*Pennisetum typhoideum*).			Marua or Ragi (*Eleusine Corocana*).		
Present return.	Next preceding return.	Corresponding return of last year.	Present return.	Next preceding return.	Corresponding return of last year.
S. Ch.	S. Ch.	S. Ch.	S. Ch.	S. Ch.	S. Ch.
...	...	...	...	...	...
...	...	...	...	...	...
...	...	...	...	...	...
...	...	...	...	...	...
...	...	...	...	...	...
...	...	10 0	...	...	...
...	...	...	...	...	...
13 0	14 0	14 0	...	...	...
...	...	...	...	...	...
...	...	...	...	...	...
...	...	...	...	...	...
...	...	...	...	...	...
...	...	...	...	...	...
...	...	...	...	...	...
...	...	...	...	...	...
...	...	...	13 0	13 0	13 0
...	...	...	...	...	...
...	...	...	...	...	...
...	...	...	...	...	...
...	...	...	...	...	...
...	...	...	...	...	...
...	...	...	...	...	...
...	...	...	...	...	...

Kangni or Kakun Italian millet (*Setaria italica*).			Gram, Chana, Chhola, Kadalay or Sunaga (*Cicer arietinum*).		
Present return.	Next preceding return.	Corresponding return of last year.	Present return.	Next preceding return.	Corresponding return of last year.
S. Ch.	S. Ch.	S. Ch.	S. Ch.	S. Ch.	S. Ch.
...	...	...	16 0	16 8	20 0
...	...	...	14 4	15 0	20 4
...	...	...	15 0	14 0	17 0
...	...	...	10 12	10 0 to 12 0	14 0 to 16 0
...	...	...	13 0	13 0	13 8
...	...	...	16 0	16 0	16 12
...	...	...	16 0	14 0	15 0
8 0	7 8	8 0	12 4	12 4	13 0
...	...	...	20 0	20 0	18 0
...	...	...	19 0	19 0	22
...	...	...	16 0	16 0	16
...	...	...	15 0	15 0	14
...	...	...	20 3	16 8	24
...	...	...	18 6	14 6	17
...	...	...	12 0	13 0	14
...	...	...	9 0	10 0	13
...	...	...	14 0	14 0	14 1
...	...	...	15 0	10 8	15
...	...	...	15 0	15 0	15
...	...	...	15 8	15 8	16
...	...	...	13 0	15 0	13
...	...	...	10 0	9 8	13
...	...	...	13 4	13 4	13

Station Bazars of the Districts of Bengal on the 15th April 1905.

INDIAN-CORN OR MAIZE (*Zea mays*).			ARHAR (*dal*) OR TUR, CAJAN PEA (*Cytisus indicus*)			SALT.			WHOLESALE PRICES PER MAUND OF 40 SEERS. SALT			DISTRICTS.	Number.	
Present return.	Next preceding return.	Corresponding return of last year.	Present return.	Next preceding return.	Corresponding return of last year.	Present return.	Next preceding return.	Corresponding return of last year.	Present return.	Next preceding return.	Corresponding return of last year.			
S. Ch.	S. Ch.	S. Ch.	S. Ch.	S. Ch.	S. Ch.	S. Ch.	S. Ch.	S. Ch.	Rs. A. P.	Rs. A. P.	Rs. A. P.	BENGAL.		
...	...	...	11 4	11 4	12 12	14 4 [A]	15 0	13 8	2 3 6	2 3 6	2 12 0	Burdwan.	1	Burdwan Division.
..	...	...	9 0	8 8	18 0	18 8 [B]	12 0	12 0	2 8 0	3 0 0	3 2 6	Birbhum.	2	
...	...	...	13 0	13 0	12 0	16 12 [C]	16 10	13 0	Panga. 2 6 0	2 6 0	3 0 0	Bankura.	3	
...	...	...	9 0	9 0	11 0	14 0 [D]	14 0	11 8	Panga. 2 6 0	2 6 0	2 14 0	Midnapore.	4	
...	...	...	10 0	10 0	10 8	13 0 [E]	13 0	13 0	3 12 0	3 12 0	3 12 0	Hooghly	5	
...	...	20 0	10 8	11 0	11 0	16 0 [F]	15 0	13 0	2 4 0	2 8 0	3 2 0	Howrah	6	
...	...	...	11 0	11 8	11 8	13 6 [G]	13 6	12 5	Panga. 2 3 0	2 12 0	2 14 0	24-Parganas.	7	Presidency Division.
14 0	14 0	17 0	8 0	8 0	9 6	10 0	10 0	11 0	2 12 0	2 12 0	2 10 0	Calcutta.	8	
...	...	...	10 12	10 12	10 0	16 0 [H]	14 0	13 0	2 6 0	2 11 0	3 0 0	Nadia.	9	
...	...	...	12 0	12 0	15 0	16 0 [I]	14 0	12 8	2 8 0	2 11 0	3 2 0	Murshidabad.	10	
...	...	...	16 0	16 0	21 0	12 0 [J]	12 0	12 0	Panga. 2 2 0	3 2 0	3 2 0	Jessore.	11	
...	...	...	10 0	10 0	9 2	13 5 [K]	13 5	13 5	3 0 0	3 0 0	3 0 0	Khulna.	12	
...	...	...	12 0	13 8	13 8	15 9 [L]	15 9	12 12	Panga. 2 9 0	2 9 0	3 1 3	Rajshahi.	13	Rajshahi Division.
...	...	...	9 9	9 9	13 4	13 0 [M]	13 4	13 4	2 8 0	3 0 0	3 0 0	Dinajpur	14	
...	...	...	10 0	10 8	9 4	13 0 [N]	12 0	12 0	Panga. 2 12 0	3 0 0	3 2 0	Jalpaiguri.	15	
12 0	13 0	18 0	6 8	7 0	6 8	11 0 [O]	11 0	10 0	3 8 0	3 8 0	4 0 0	Darjeeling	16	
...	...	...	9 0	9 0	9 0	16 0 [P]	14 0	12 1½	2 7 0	2 10 0	3 5	Rangpur.	17	
...	...	...	19 8	19 8	17 4	15 15	15 12	12 12	Panga. 2 8 0	2 9 4	3 0 2	Bogra.	18	
...	...	...	13 0	12 0	12 0	14 4 [Q]	12 0	12 0	Panga. 2 8 0	3 0 0	3 4 0	Pabna.	19	
...	...	...	19 0	19 0	16 0	14 0 [R]	14 0	13 0	Panga. 2 12 0	2 12 0	3 0 0	Dacca.	20	Dacca Division.
...	...	...	11 0	10 10	8 8	15 4 [S]	12 6	12 8	Panga. 2 10 0	3 2 0	3 2 0	Mymensingh	21	
...	...	...	9 0	10 8	9 0	15 0 [T]	13 0	12 0	2 10 0	2 10 0	3 4 0	Faridpur.	22	
...	...	...	...	...	...	13 0 [U]	13 0	13 0	3 0 0	3 0 0	3 0 0	Backergunge.	23	

K. In the subdivisions the retail prices of salt per rupee are—Bagerhat 12 seers; Satkhira 13 seers.
L. In the subdivisions the retail prices of salt per rupee are—Nator 15¾ seers; Naogaon 13½ seers.
M. No report from subdivision.
N. At Alipur Duars the retail price of salt is 10 seers per rupee.
O. At Kurseong and Siliguri the retail prices of salt per rupee are 8 seers and 12½ seers, respectively.
P. In the subdivisions the retail prices of salt per rupee are—Gaibanda 12 seers; Kurigram 12 seers; Nilphamari 14 seers.
Q. At Sirajganj the retail price of salt is 17 seers per rupee.
R. In the marts in the interior of the district the retail prices of salt per rupee are—Madaripur 13 4/8 seers; Manikganj 10½ seers; Mirkadim 12½ seers.
S. In the subdivisions the retail prices of salt per rupee are—Kishorganj 12 seers 12 chittaks; Jamalpur 12 4/8 seers. Tangail return not received; Netrokona return not received.
T. In the subdivisions the retail prices of salt per rupee are—Goalundo 12 seers 1 chittak; Madaripur 14 seers.
U. In the subdivisions the retail prices of salt per rupee are—Pirojpur 11 seers; Patuakhali 13 seers; Bibula 14 seers.

PRICES-CURRENT (retail) of Food-grains and Salt in the Head-quarters

QUANTITIES PER RUPEE IN

Number	DISTRICTS	WHEAT.			BARLEY.			RICE, COMMON.			JOWAR OR CHOLUM (*Sorghum Vulgare*).		
		Present return.	Next preceding return.	Corresponding return of last year.	Present return.	Next preceding return.	Corresponding return of last year.	Present return.	Next preceding return.	Corresponding return of last year.	Present return.	Next preceding return.	Corresponding return of last year.
BENGAL—*concluded.*		S. Ch.	S. Ch.	S. Ch.	S. Ch.	S. Ch.	S. Ch.	S. Ch.	S. Ch.	S. Ch.	S. Ch.	S. Ch.	S. Ch.
CHITTAGONG DIVISION	24 Tippera ...	... *	...	...	...	..	...	13 5	13 13	15 0	...	...	...
	25 Noakhali ...	...	...		...	...	...	14 0	15 0	13 0	...	...	...
	26 Chittagong ...	...	...	...	...	...	...	14 0	13 4	13 12	...	...	...
	27 Chittagong Hill Tracts.	...	...	...	...	...	...	14 0	13 0 to 14 0	13 0	...	...	...
BIHAR.													
PATNA DIVISION.	28 Patna	13 0	13 0	17 8	24 0	24 0	26 0	15 0	15 0	16 0	...	...	25 0
	29 Gaya ...	15 6	14 6	17 2	22 9	20 8	25 10	14 6	13 13	13 1	...	...	25 10
	30 Shahabad ...	14 0	14 0	18 0	20 0	20 0	24 0	14 0	14 0	15 0	...	...	...
	31 Saran ...	14 0	14 0	15 8	23 0	22 0	26 0	14 0	14 0	16 0	...	...	...
	32 Champaran ...	12 8	12 0	16 0	28 0	28 0	33 0	14 8	15 0	15 0 to 17 0	...	...	...
	33 Muzaffarpur ..	12 0	12 0	14 0	24 0	24 0	26 0	13 0	13 0	15 0	...	...	...
	34 Darbhanga .	13 8	13 13	17 9	26 17	23 2	30 12	15 14	15 15	15 12	...	...	...
BHAGALPUR DIVISION	35 Monghyr ...	17 0	17 4	17 0	27 8	27 12	26 0	13 0	13 4	11 8	...	...	...
	36 Bhagalpur ...	15 2	13 0	15 4	25 4	15 0	22 12	15 2	15 4	13 14	...	...	...
	37 Purnea ...	11 0	11 0	13 0	...	...	...	13 0	13 0	15 0	...	...	...
	38 Maida ...	13 0	13 0	13 0	...	...	...	13 0	13 8	14 8	...	...	...
	39 Santhal Parganas.	11 0	10 0	11 8	19 0	18 0	16 0	15 0	14 0	12 0	...	...	...
ORISSA.													
ORISSA DIVISION	40 Cuttack ...	14 7	13 2	17 6	...	...	...	17 1	17 1	20 5	...	...	...
	41 Balasore* ...	...	13 0	11 6	...	...	...	...	17 0	18 0 to 19 0	...	...	...
	42 Angul ...	10 0	8 0	8 0	...	...	...	20 0	20 0	22 0	...	...	...
	43 Puri ...	12 7	11 13	11 2	...	...	...	16 6	17 1	21 0	...	...	...
CHOTA NAGPUR.													
CHOTA NAGPUR DIVISION.	44 Hazaribagh ...	11 0	11 0	12 8	16 8	16 8	15 0	12 0	12 4	13 8	...	...	...
	45 Ranchi ...	7 12 to 12 8	7 12 to 13 0	8 12 to 15 0	15 0	16 0	18 0	13 0	13 4	14 0	...	...	...
	46 Palamau ...	14 10	14 10	16 5	23 10	23 10	27 0	12 6	12 6	13 9	...	...	...
	47 Manbhum ...	12 0	11 8	12 0	16 0	16 0	25 0	14 0	14 0	12 0	...	...	22 0
	48 Singhbhum ...	12 0	12 0	12 0	...	...	...	14 0	14 0	15 0	...	...	...

* Present return not received.

V. In the subdivisions the retail prices of salt per rupee are—Chandpur 10 seers 10 chitaks ; Brahmanbaria 13 seers 8 chitaks.

W. At Feni Mát the retail price of salt is 13 seers per rupee.

X. Return from Cox's Bazar not received.

Y. At Chandraghona the retail price of salt is 12 seers per rupee.

Z. In the subdivisions the retail prices of salt per rupee are—Barh return not received ; Dinapore return not received ; Bihar return not received.

a. In the subdivisions the retail prices of salt per rupee are—Jahanabad return not received ; Nawada return not received ; Aurangabad 14 seers.

b. In the subdivisions the retail prices of salt per rupee are—Buxar 15 seers ; Bhabhua 18 seers ; Sasaram 15 seers.

c. In the subdivisions the retail prices of salt per rupee are—Siwan 15 seers 7 chitaks, Gopalganj 15 seers 14½ chitaks.

d. At Bettiah the retail price of salt is 12 seers per rupee.

e. In the subdivisions the retail prices of salt per rupee are—Hajipur 12 seers ; Sitamarhi 14 seers.

f. In the subdivisions the retail prices of salt per rupee are—Samastipur 15 seers ; Madhubani 14 seers 8 chitaks.

g. In the subdivisions the retail prices of salt per rupee are—Begusarai return not received ; Jamui 14 seers.

CALCUTTA,
The 20th April 1905.

SEERS OF 80 TOLAHS.

Bajra or Cumbu (*Pennisetum typhoid-eum*).			Marua or Ragi (*Eleusine Coracana*).		
Present return.	Next preceding return.	Corresponding return of last year.	Present return.	Next preceding return.	Corresponding return of last year.
S. Ch.	S. Ch.	S. Ch.	S. Ch.	S. Ch.	S. Ch.
...	...	...	...	...	...
...	...	...	...	...	...
...	...	...	...	...	...
...	...	...	...	...	...
...	...	...	...	...	...
...	...	...	...	...	...
...	...	...	...	...	...
...	...	...	20 0	20 0	...
...	...	...	28 0	30 0	34 0
...	...	...	24 0	24 0	26 0
...	...	...	27 8	25 4	31 0
...	...	...	...	...	...
...	...	...	...	...	...
...	...	...	...	...	...
..	20 0	20 0	...	...	...
...	...	...	...	...	...
...	...	...	...	...	...
...	...	...	...	...	...
...	...	...	...	...	...
...	...	...	...	...	...
...	...	...	20 0	20 0	29 0
...	...	...	24 0	24 0	33 0
...	...	...	...	...	...
...	...	...	...	...	...
...	...	...	...	...	...

Kangni or Kakun, Italian millet (*Setaria italica*).			Gram, Chana, or Chhola, Kadalay or Sunaga (*Cicer arietinum*).		
Present return.	Next preceding return.	Corresponding return of last year.	Present return.	Next preceding return.	Corresponding return of last year.
S. Ch.	S. Ch.	S. Ch.	S. Ch.	S. Ch.	S. Ch.
...	...	...	...	...	...
...	...	...	12 0	12 0	12 0
...	...	...	12 0	12 0	13 0
...	...	...	...	...	...
19 0	19 0	22 0	19 0	20 0	23 0
...	...	...	20 8	18 7	20 8
...	...	...	14 0	14 0	22 0
...	...	...	18 0	14 0	20 8
...	...	...	18 0	14 0	23 0
...	...	...	13 0	13 0	18 0
...	...	...	18 11	15 6	24 0
...	...	...	21 0	21 0	21 0
...	...	...	19 0	15 0	21 8
...	...	...	10 0	11 0	14 0
...	...	...	18 0	18 0	24 0
...	...	...	14 0	13 0	14 0
...	...	...	Biri or kalai. 19 1	19 1	18 6
...	...	...	Chhola. 13 0	13 0	14 0
...	...	...	Biri. ...	16 0	16 0
...	...	...	16 0	15 0	20 0
...	...	...	15 12	16 6	15 12
...	...	...	13 0	13 0	16 8
...	...	...	10 8	12 8 to 13 8	14 8 to 15 8
...	...	...	20 6	16 14	20 4
...	...	...	14 8	14 0	15 0
...	...	...	14 0	14 0	13 0

Station Bazars of the Districts of Bengal on the 15th April 1905—concld.

Indian-corn or Maize (*Zea mays*).			Arhar (*dál*) or Tur, Cadjan Pea (*Cajanus indicus*).			Salt.			WHOLESALE PRICES PER MAUND OF 40 SEERS. Salt.			DISTRICTS	Number.	
Present return.	Next preceding return.	Corresponding return of last year.	Present return.	Next preceding return.	Corresponding return of last year.	Present return.	Next preceding return.	Corresponding return of last year.	Present return.	Next preceding return.	Corresponding return of last year.			
S. Ch.	S. Ch.	S. Ch.	S. Ch.	S. Ch.	S. Ch.	S. Ch.	S. Ch.	S. Ch.	Rs. A. P.	Rs. A. P.	Rs. A. P.			
												BENGAL—*concluded.*		
...	...	...	...	...	...	12 13 V	10 10	10 10	2 10 0	2 15 0	3 2 0	Tippera.	24	Chittagong Division.
...	...	...	...	...	...	13 0 W	13 0	13 0	3 0 0	3 0 0	3 2 0	Noakhali.	25	
...	...	...	8 12	9 0	10 0	16 0 X	13 11	13 8 Panga.	2 6 0	2 12 0	2 14 0	Chittagong.	26	
...	...	...	8 0	8 8	7 0	12 0 Y	11 0	11 0	3 5 0	3 8 0	3 8 0	Chittagong Hill Tracts.	27	
												BIHAR.		
21 0	22 0	29 0	13 8	13 8	15 0	16 0 Z	13 0	13 0 Panga.	2 8 0	3 0 0	3 0 0	Patna.	28	Patna Division.
18 7	20 8	23 9	12 5	12 5	12 9	11 4 a	12 15	12 15	3 8 10	3 1 9	3 1 9	Gaya.	29	
18 0	18 0	...	13 0	13 0	14 0	13 0 b	13 0	12 0	3 1 3	3 1 3	3 5 4	Shahabad.	30	
19 8	20 0	26 0	12 0	14 0	14 0	15 8 c	15 0	12 12 Panga.	2 8 0	2 9 0	3 0 9	Saran.	31	
22 8	22 0	30 8	15 0	15 0	17 0 to 24 0	15 12 d	12 8	12 8	2 9 0	3 3 0	3 3 0	Champaran.	32	
19 0	19 0	26 0	13 0	12 8	12 0	13 0 e	12 8	12 4 Panga.	2 15 3	3 1 3	3 3 0	Muzaffarpur	33	
22 0	23 11	27 8	13 3	13 4	17 9	15 8 f	12 1	13 4	3 5 0	3 5 0	3 8 0	Darbhanga.	34	
28 4	24 2	...	11 0	11 0	10 0	14 10 g	14 10	12 0	2 12 0	2 13 9	3 4 0	Monghyr.	35	Bhagalpur Division.
21 8	20 0	21 8	11 6	11 4	12 10	16 0 h	12 0	12 8	2 5 0	3 6 0	2 15 3	Bhagalpur.	36	
...	...	28 0	11 0	11 0	10 0	12 0 i	12 0	11 0	3 4 0	3 4 0	3 8 0	Purnea.	37	
28 14	30 0	...	14 0	14 0	13 0	13 0 j	12 0	11 0	3 1 0	3 5 3	3 8 0	Malda.	38	
16 0	18 0	20 0	16 0	16 0	20 0	13 4 k	12 0	11 0	2 12 0	3 2 0	3 8 0	Santhal Parganas.	39	
												ORISSA.		
...	...	...	18 6	18 6	18 6	15 0 l	15 0	15 0	2 8 0	2 8 0	2 8	Cuttack.	40	Orissa Division.
...	...	...	...	10 0	10 0	... m	13 0	13 0	1 ...	2 13 6	2 15 0	Balasore.	41	
...	...	...	20 0	20 0	24 0	10 0 n	10 0	11 0	4 0 0	4 0 0	3 8 0	Angul.	42	
...	...	...	10 8	11 2	10 8	18 0 o	16 0	16 0	2 4 0	2 8 0	2 8 0	Puri	43	
												CHOTA NAGPUR.		
16 0	16 8	21 0	10 0	9 8	10 8	12 8 p	12 8	10 8 Panga.	3 1 2	3 1 3	3 10 0	Hazaribagh.	44	Chota Nagpur Division.
18 0	17 0	28 0	6 0 to 6 8	6 0 to 6 8	9 0 to 10 0	12 0	12 0	11 8 Panga.	3 4 0	3 4 0	3 4 6	Ranchi.	45	
16 14	16 14	27 0	12 6	11 4	16 14	15 3 q	14 10	12 6 Panga.	...	...	...	Palamau.	46	
...	...	26 0	11 8	11 8	12 0	14 8	14 8	12 0	2 8 0	2 8 0	3 4 0	Manbhum.	47	
...	...	...	13 0	13 0	10 0	11 0	11 0	11 0 Panga.	3 8 0	3 8 0	3 8 0	Singhbhum.	48	

h. In the subdivisions the retail prices of salt per rupee are—Banka 11½ seers; Madhipura 12 seers; Supaul 13 seers.
i. In the subdivisions the retail prices of salt per rupee are—Kishanganj 12 seers; Araria 13 seers.
j. At Balia Nawabganj the retail price of salt is 14 seers per rupee.
k. In the subdivisions the retail prices of salt per rupee are—Deoghur 16 seers; Godda 10 seers; Jamtara return not received; Pakaur 16 seers; Rajmahal 13 seers.
l. In the subdivisions the retail prices of salt per rupee are—Jajpur 16 seers; Kendrapara 13 seers.
m. At Bhadrak the retail price of salt is 12 seers per rupee.
n. In the marts in the interior of the district the retail prices of salt per rupee are—Sankhpur 10½ seers, Bimlipara 9 seers.
o. At Khurda the retail price of salt is 16 seers per rupee.
p. At Gumla the retail price of salt is 10½ seers per rupee.
q. At Gobindpur the retail price of salt is 16 seers per rupee.

Published for general information.

R. W. CARLYLE,
Offg. Chief Secy. to the Govt. of Bengal.

PRICES-CURRENT (wholesale) of Food-grains, Firewood, &c.,

Number.	Marts.	Rice (best sort).			Common rice (*mota chaul*).			Wheat (*Triticum sativum*).			Barley (*Hordeum vulgare*).		
		Present return.	Next preceding return.	Corresponding return of last year.	Present return.	Next preceding return.	Corresponding return of last year.	Present return.	Next preceding return.	Corresponding return of last year.	Present return.	Next preceding return.	Corresponding return of last year.
		Rs. A. P.	Rs. A. P.	Rs. A. P.	Rs. A. P.	Rs. A. P.	Rs. A. P.	Rs. A. P.	Rs. A. P.	Rs. A. P.	Rs. A. P.	Rs. A. P.	Rs. A. P.
1	Calcutta ...	5 12 0	5 14 0	5 8 0	4 8 0	4 8 0	4 0 0	3 8 0	3 8 0	3 4 0	2 8 0	2 8 0	2 6 0
2	Burdwan ...	3 4 0	3 4 0	4 1 6	2 12 9	2 12 9	2 15 0	...	...	...	...	...	...
3	Midnapore ...	3 0 0	3 0 0	3 4 0	2 7 0	2 7 0	2 10 6	...	...	...	...	...	...
4	Patna ...	6 10 0	6 10 0	6 10 0	3 2 3	3 2 9	2 7 3	2 6 9	2 10 6	2 2 0	...	...	...
5	Rangpur ...	4 0 0	4 0 0	3 1 9	2 10 0	2 10 0	2 7 1	3 0 0	3 0 0	3 3 6	...	...	...
6	Dacca ...	3 12 0	3 12 0	2 12 0	2 8 0	2 8 0	2 6 0	2 12 0	2 12 0	2 6 0	1 8 0	1 8 0	1 6 0
7	Chittagong ...	...	...	...	2 14 0	3 0 0	2 12 0	...	...	...	...	...	...
8	Patna ...	4 0 0	4 0 0	2 12 0	2 10 0	2 9 0	2 7 6	3 1 0	3 1 0	2 4 0	1 11 0	1 11 0	1 6
9	Mumfferpur ...	5 0 0	5 0 0	5 0 0	2 13 0	2 13 0	2 8 0	3 1 3	3 1 3	2 10 6	1 9 6	1 9 6	1 8 0
10	Bhagalpur ...	3 8 0	3 8 0	3 15 0	2 10 0	2 8 0	2 14 0	2 10 0	3 0 0	2 9 0	1 9 0	2 9 0	1 12 0
11	Cuttack ...	3 13 0	3 13 0	3 13 0	2 5 6	2 5 6	1 14 0	3 0 0	3 0 7	2 1 0	...	...	...
12	Ranchi ...	4 3 4	4 3 4	3 15 9	2 14 0	2 13 0	2 9 3	3 3 0 to 5 2 6	3 1 0 to 5 2 6	2 10 0 to 4 9 0	2 10 6	2 8 0	2 3 6

Calcutta,
The 20th April 1905.

Juar or Cholum (*Sorghum vulgare*).			Bajra or Cumbu (*Pennisetum typhoideum*).			Marua or Ragi (*Eleusine coracana*).			Gram, Chana, Chola, Kadalay, or Sunaga (*Cicer arietinum*).		
Present return.	Next preceding return.	Corresponding return of last year.	Present return.	Next preceding return.	Corresponding return of last year.	Present return.	Next preceding return.	Corresponding return of last year.	Present return.	Next preceding return.	Corresponding return of last year.
Rs. A. P.	Rs. A. P.	Rs. A. P.	Rs. A. P.	Rs. A. P.	Rs. A. P.	Rs. A. P.	Rs. A. P.	Rs. A. P.	Rs. A. P.	Rs. A. P.	Rs. A. P.
2 10 0	2 10 0	2 4 0	2 12 0	2 10 0	2 10 0	...	...	...	3 0 0	3 0 0	2 12 0
...	...	...	...	...	...	...	...	...	2 8 0	2 0 0	2 0 0
...	...	...	...	...	...	...	...	...	2 14 0 to 3 8 0	2 14 0 to 3 8 0	2 5 0 to 3 12 0
...	...	...	...	...	...	...	...	...	2 10 6	2 10 6	2 7 6
...	...	...	...	...	...	...	...	...	2 10 0	2 10 0	2 10 4
...	...	...	...	...	...	...	...	...	2 8 0	2 8 0	2 8 0
...	...	...	...	...	...	...	...	...	3 8 0	3 8 0	2 14 0
...	...	1 9 0	...	...	...	...	...	1 5 0	2 1 6	2 0 0	1 11 0
...	...	...	...	...	...	1 9 6	1 9 6	1 8 0	2 13 9	2 13 9	2 2 6
...	...	...	...	...	...	...	...	...	2 1 6	2 10 0	1 13 6
										Buri or kalai.	
...	...	...	...	...	...	...	...	...	2 1 6	2 1 3	2 1 0
...	...	...	...	...	...	...	...	...	2 13 0	2 15 6 to 3 3 0	2 9 3 to 2 12 0

PRICE PER MAUND OF

Indian-corn or Maize (*Zea mays*).			Arhar Dal or Thur—Cadjan Pea (*Cajanus indicus*).			Linseed.			Mustard and Rapeseed		
Present return.	Next preceding return.	Corresponding return of last year.	Present return.	Next preceding return.	Corresponding return of last year.	Present return.	Next preceding return.	Corresponding return of last year.	Present return.	Next preceding return.	Corresponding return of last year.
Rs. a. p.	Rs. a. p.	Rs. a. p.	Rs. a. p.	Rs. a. p.	Rs. a. p.	Rs. a. p.	Rs. a. p.	Rs. a. p.	Rs. a. p.	Rs. a. p.	Rs. a. p.
2 8 0	2 8 0	...	4 12 0	4 12 0	4 4 0	4 14 0	5 6 0	4 2 0	4 10 0	4 10 0	3 14 0
—	—	—	3 6 0	3 6 0	3 2 0	—	—	...	4 12 0	4 4 0	3 12 0
—	—	—	3 12 0	3 12 0	3 4 0	3 14 0	4 0 0	3 4 0	Black mustard. 4 8 0	4 8 0	3 12 0
									Rapeseed. 4 4 0	4 4 0	2 12 0
—	—	—	3 4 0	3 4 0	3 5 0	3 13 0	3 11 0	3 10 0	4 0 0	4 4 0	4 0 0
—	—	—	3 12 0	3 2 0	3 12 5	—	—	—	4 6 0	3 14 0	3 7
—	—	—	2 0 0	2 0 0	2 6 0	—	—	—	—	—	—
—	—	—	4 2 0	4 3 0	4 4 0	—	—	—	4 4 0	4 8 0	3 14 0
2 14 6	2 3 0	1 5 0	2 15 0	2 15 0	2 10 0	4 12 0	4 4 0	3 2 0	5 0 0	4 4 0	2 14
2 0 0	2 0 0	1 3 3	2 15 3	3 1 3	3 3 0	...		—	—	—	—
										Rapeseed.	
1 14 0	2 0 0	1 13 0	3 3 0	3 9 0	3 2 6	4 6 0	6 10 0	3 2 0	4 0 0	3 15 0	3 7
									4 6 0	Mustard. 3 5 0	2 10
—	—	—	2 3 0	2 2 9	2 0 3	...	—	—	4 6 0	4 1 0	4 11
...	...	...	6 2 3 to 6 10 0	6 2 3 to 6 10 0	4 0 0 to 4 7 0	4 9 0	5 0 0	4 0 0	4 0 0 to 4 8 0	4 0 0 to 4 5 0	3 10 to 2 14

6246

40 STANDARD SEERS.

Til or Jinjili seed.			Sugar (raw).			Cotton (cleaned).			Jute.		
Present return.	Next preceding return.	Corresponding return of last year.	Present return.	Next preceding return.	Corresponding return of last year.	Present return.	Next preceding return.	Corresponding return of last year.	Present return.	Next preceding return.	Corresponding return of last year.
Rs. A. P.	Rs. A. P.	Rs. A. P.	Rs. A. P.	Rs. A. P.	Rs. A. P.	Rs. A. P.	Rs. A. P.	Rs. A. P.	Rs. A. P.	Rs. A. P.	Rs. A. P.
4 4 0	4 4 0	3 12 0	5 4 0	5 4 0	4 4 0	17 0 0	18 0 0	17 0 0	5 14 0	6 2 0	5 2 0
...	...	...	5 5 0	5 1 0	4 4 0	19 0 0	20 0 0	23 0 0	...	..	...
...	...	...	5 4 0	5 8 0	4 0 0 to 4 4 0	23 0 0	23 0 0	25 0 0	...	...	...
—	...	...	4 4 0	4 4 0	4 6 0	24 0 0	24 0 0	22 0 0	6 9 0	6 7 2	4 14 0
—	...	...	4 0 0	4 0 0	5 8 10	...	...	...	6 8 0	6 2 0	4 5 4
—	...	...	6 2 0	6 0 0	6 0 0	...	...	...	6 0 0	6 0 0	5 0 0
—	...	...	8 8 0	8 8 0	5 0 0	15 8 0	15 8 0	21 0 0	...	—	...
6 0 0	5 8 0	3 2 0	4 8 0	4 8 0	3 8 0	18 0 0	18 0 0	20 0 0	6 0 0	6 0 0	4 8 0
—	—	...	3 10 0	3 10 0	2 13 0	...	...	...	—	—	—
—	...	...	4 8 0	11 10 0	4 0 0	20 0 0	20 0 0	25 8 0	—	—	...
4 13 0	4 3 0	2 15 6	4 12 6	4 12 0	4 0 0	20 0 0	20 0 0	20 0 0	—	—	—
—	—	—	4 11 0 to 5 4 0	5 5 0	4 7 0	22 14 0	22 14 0	26 10 6	—	—	—

624c

Ghi (clarified butter).			Tobacco Leaf			Hides (cow).			Grass.		
Present return.	Next preceding return.	Corresponding return of last year.	Present return.	Next preceding return.	Corresponding return of last year.	Present return.	Next preceding return.	Corresponding return of last year.	Present return.	Next preceding return.	Corresponding return of last year.
Rs. A. P.	Rs. A. P.	Rs. A. P.	Rs. A. P.	Rs. A. P.	Rs. A. P.	Rs. A. P.	Rs. A. P.	Rs. A. P.	Rs. A. P.	Rs. A. P.	Rs. A. P.
						Per 100 pieces.					
41 0 0	41 0 0	37 0 0	8 0 0	8 0 0	8 0 0	450 0 0	450 0 0	250 0 0	1 2 0	1 4 0	1 2 0
35 0 0	35 8 0	32 0 0	...	...	...	...	...	...	...	...	...
				Madhukhali.			Uncleaned, per piece.				
34 8 0	35 0 0	32 8 0	6 8 0	6 8 0	8 12 0	1 12 0 to 2 12 0	2 0 0 to 3 0 0	2 0 0 to 3 0 0	...	...	...
				Pulta.			Cleaned, per piece.				
			8 12 0	8 8 0	11 12 0	2 0 0 to 3 0 0	2 4 0 to 3 4 0	2 4 0 to 3 4 0			
52 0 0	52 0 0	52 0 0	11 0 0	11 0 0	12 8 0	...	...	...	...	...	...
33 8 0	33 12 0	32 14 0	5 2 0	5 2 0	6 3 10	...	...	...	0 3 0	0 3 0	0 3 0
						Per maund.					
44 0 0	44 0 0	40 0 0	7 10 0	7 10 0	7 8 0	38 0 0	38 0 0	26 0 0	0 6 0	0 6 0	0 5 0
						Per maund.					
36 0 0	36 0 0	35 0 0	7 0 0	7 0 0	14 0 0	15 0 0	15 0 0	16 8 0	...	...	...
28 0 0	28 0 0	29 0 0	3 8 0	3 8 0	3 8 0	...	...	...	0 5 0	0 5 0	0 5 0
30 7 6	30 7 6	30 7 0	8 0 0	8 0 0	8 0 0	...	...	...	...	...	...
32 0 0	32 0 0	31 0 0	6 0 0	6 0 0	4 9 0	...	...	...	...	...	...
						Per maund.					
36 9 0	35 9 9	34 8 0	4 4 0	4 4 0	4 4 0	25 0 0	25 0 0	25 0 0	0 7 6	0 7 0	0 7 0
						Per piece.					
32 0 0 to 37 0 0	33 12 0 to 37 0 0	30 7 6 to 35 8 0	10 0 0	10 0 0 to 13 0 0	8 10 0 to 13 5 8	1 8 0	1 4 0	2 0 0	0 5 3	0 5 4	0 5 4

in the undermentioned Marts of Bengal on the 15th April 1905.

Straw.			Juar stalks.			PRICE PER MAUND OF 40 STANDARD SEERS.									Marts.
						Iron.			Firewood.			Salt.			
Present return.	Next preceding return.	Corresponding return of last year.	Present return.	Next preceding return.	Corresponding return of last year.	Present return.	Next preceding return.	Corresponding return of last year.	Present return.	Next preceding return.	Corresponding return of last year.	Present return.	Next preceding return.	Corresponding return of last year.	
Rs. a. p.	Rs. a. p.	Rs. a. p.	Rs. a. p.	Rs. a. p.	Rs. a. p.	Rs. a. p.	Rs. a. p.	Rs. a. p.	Rs. a. p.	Rs. a. p.	Rs. a. p.	Rs. a. p.	Rs. a. p.	Rs. a. p.	
0 14 0	1 0 0	0 14 0	...	...	...	5 12 0	5 12 0	5 8 0	0 8 0	0 8 0	0 8 0	2 12 0	Panga. 2 12 0	2 10 0	1. Calcutta.
0 8 6	0 7 0	0 12 0	...	...	...	...	...	...	0 6 0	0 5 8	0 6 0	2 3 6	2 3 6	2 12 0	2. Burdwan.
0 8 0	0 8 0	0 10 0	...	...	...	2 8 0 to 4 0 0	2 8 0 to 4 0 0	2 8 0	2 8 0	0 4 0	0 4 0	2 6 0	Panga. 2 6 0	2 14 0	3. Midnapore.
1 0 0	1 0 0	0 14 0	...	...	...	7 0 0	7 0 0	7 0 0	0 6 0	0 6 0	0 6 0	2 8 0	Panga. 3 0 0	3 4 6	4. Pabna.
0 12 0	0 12 0	0 12 0	...	...	...	7 4 0	7 4 0	7 4 0	0 8 0	0 8 0	0 8 0	2 7 0	Panga. 2 10 0	3 5 2	5. Rangpur.
...	...	...	...	...	...	5 8 0	5 8 0	5 0 0	0 6 0	0 6 0	0 5 0	2 12 0	Panga. 2 12 0	3 0 0	6. Dacca.
...	...	...	...	...	...	4 8 0	4 8 0	4 8 0	...	...	...	2 6 0	Panga. 2 12 0	2 14 0	7. Chittagong.
0 8 0	0 6 0	0 6 0	...	...	...	4 0 0	4 0 0	4 0 0	0 6 0	0 5 0	0 5 0	2 8 0	3 0 0	3 0 0	8. Patna.
...	...	...	...	...	...	5 11 6	5 11 6	5 11 6	0 4 0	0 5 3	0 4 0	2 15 3	Panga. 3 3 1	3 3 3	9. Muzaffarpur.
...	...	...	...	...	...	5 0 0	5 0 0	5 0 0	0 5 0	0 5 0	0 5 3	2 8 0	3 5 0	2 15 3	10. Bhagalpur.
0 7 6	0 7 0	0 7 0	...	...	...	3 13 4	3 13 0	4 8 0	0 4 0	0 4 0	0 4 6	2 8 0	Karkatch 2 8 0	2 8 0	11. Cuttack.
0 9 1	0 9 1	0 4 0 to 0 6 0	...	...	...	5 8 0	5 8 0	5 4 0	0 5 0	0 5 0	0 5 0	3 4 0	Panga. 3 4 0	3 4 6	12. Ranchi.

R. W. CARLYLE,

Offg. Chief Secretary to the Govt. of Bengal.

GOVERNMENT OF BENGAL, IRRIGATION DEPARTMENT.

Approximate Return of Traffic on the Circular and Eastern Canals for the week ending Saturday, the 22nd April 1905, as compared with the corresponding week of the previous year.

Nature of Cargo.	Week ending Saturday, the 22nd April 1905.			Week ending Saturday, the 23rd April 1904.		
	Number of boats.	Weight of cargo.	Tollage.	Number of boats.	Weight of cargo.	Tollage.
		Mds.	Rs.		Mds.	Rs.
Rice and paddy	837	1,62,342	2,828	570	75,540	1,170
Jute	10	9,300*	78	25	12,860†	130
Fire-wood	55	45,875	696	33	13,625	147
Other articles	616	2,28,045	2,969	576	1,72,846	2,082
Total ...	1,518	4,45,562	6,571	1,204	2,74,871	3,5[illegible]9

* Weight by canal measurement = 9,300 maunds.
† Ditto ditto = 13,562 „

IRRIGATION DEPARTMENT, BENGAL.

IRRIGATION OPERATIONS FOR THE OFFICIAL YEAR 1904-05.

Area leased for irrigation up to end of February 1905.

Circle.	District.	Canal.	Estimated full discharge.	Average discharge in month.	Discharge utilised.	Approximate area of land irrigated during the year up to the end of the month.	Approximate area of land under irrigation up to the same date last year.	Details of areas leased. Long-term leases.	Season leases. Kharif.	Rabi.	Sugarcane.	Hot-weather.	Total.	Grand total.	Rainfall, 1904-05. During month.	Up to end of month.	Rainfall, 1903-04. During month.	Up to end of month.	Remarks.
			C. ft.	C. ft.	C. ft.	Acres.	Acres.	Acres.	Acres.	Acres.	Acres.	Acres.	Acres.	Acres.	Inches.	Inches.	Inches.	Inches.	
Orissa	Cuttack	Taldanda system	1,343	164	45	56,434	51,445	55,119	1,236	31	36	12	1,315	56,434	0·44	53·43	0·08	59·03	Average rainfall of Kulsai, Balia and Jagatsingpur.
		Kendrapara do.	1,995	162	65	73,466	75,006	56,126	16,944	...	...	...	16,944	73,070	0·69	51·51	0·04	56·99	Average rainfall of Kendupatna, Marsaghai, Kendrapara, Nurtang and Ichapur.
		High Level, Range I	608	66	...	22,639	19,377	21,413	1,121	52	47	1	1,221	22,634	0·37	50·52	0·20	58·81	Average rainfall of Cuttack and Jenapur.
		Ditto, Range II	728	...	...	5,829	5,812	5,816	...	60	...	...	60	5,876	0·12	55·97	0·13	59·46	Average rainfall of Jenapur and Akhoyapada.
		Jajpur Canal	700	79	70	15,448	15,402	14,370	251	3,001	30	11	3,293	17,663	0·02	54·31	0·27	57·98	Jajpur.
	Balasore	Dudhai Canal	...	77	77	767	129	...	...	3,163	...	...	3,163	3,163	...	...	...	...	
		High Level, Range III	728	50	...	41,296	40,163	40,166	510	206	132	362	1,210	41,370	0·07	57·57	0·02	66·46	Akhoyapada.
		Total Orissa Canals ...	...	...	...	215,463	207,334	193,004	(a)20,062	6,513	245	326	27,206	220,210	...	...	...	...	
		Total of the corresponding period of last year.	...	...	...	...	...	198,248	(b)7,601	3,570	212	256	11,639	209,837	...	...	...	...	
South-Western	Midnapore	Midnapore	1,411	101	...	76,624	82,025	62,231	14,963	...	...	...	14,963	77,194	2·48	61·33	0·67	45·78	
		Panchkura	522	7	5	5,204	9,192	7,911	14	...	...	...	14	7,925	2·24	56·95	0·81	49·02	
	Howrah	Tidal Reaches, Ranges I and II...	...	...	...	190	190	228	...	...	...	...	...	228	1·31	58·55	2·49	56·33	
		Total Midnapore Canal ...	...	...	...	82,018	91,407	70,370	(c)14,977	...	...	...	14,977	85,347	...	...	...	...	
		Total of the corresponding period of last year.	...	...	...	...	...	79,029	(c)14,411	...	...	...	14,411	93,440	...	...	...	...	
	Burdwan and Hooghly.	Eden Canal	1,069	128	4	26,214	28,141	25,201	(d)356	120	5	...	481	25,682	2·73	59·72	0·32	53·13	
		Total Eden Canal ...	...	...	...	26,214	28,141	25,201	356	120	5	...	481	25,682	...	...	...	...	
		Total of the corresponding period of last year.	...	...	...	...	...	26,457	(e)963	143	5	...	1,101	27,558	...	...	...	...	

(a) Of this, 19,857 acres represent provisional lease.
(b) " 7,384 " "
(c) Provisional lease.
(d) Includes 290 acres under one flushing.
(e) " 608 " " "

Circle.	District.	Canal.	Estimated full discharge.	Average discharge in month.	Discharge utilised.	Approximate area of land irrigated during the year up to the end of the month.	Approximate area of land under irrigation up to the same date last year.	DETAILS OF AREAS LEASED.							Rainfall, 1904-05.		Rainfall, 1903-04.		Remarks.
								Long-term leases.	Season Leases.										
									Kharif.	Rabi.	Sugarcane.	Hot-weather.	Total.	Grand total.	During month.	Up to end of month.	During month.	Up to end of month.	
			C. ft.	C. ft.	C. ft.	Acres.	Acres.	Acres.	Acres.	Acres.	Acres.	Acres.	Acres.	Acres.	Inches.	Inches.	Inches.	Inches.	
Sone	Shahabad	Western Main	4,500	1,007	105	38,695	32,785	29,464	3,466	16,270	...	377	14,113	34,217	0·26	46·26	0·00	41·47	
		Nasir	1,325	293	47	131,965	125,480	90,262	6 643	13,480	...	5 8-3	27,480	117,892					
		Arrah	2,000	1,008	227	236,000	228,110	149,978	4,449	17,449	...	14,834	37,422	196,306	0·14	49·81	0·00	28·46	
	Patna and Gaya	Eastern Main	1,400	273	243	4,104	3,000	3,230	263	130	...	27	422	3,942	0·17	58·77	0·13	21 83	
		Patna				168,340	160,141	81,313	9,775	6,719	...	3,681	19,175	160,488					
		Total Sone Canals	...	...	...	581,317	557,979	354,911	26,911	47,220	...	25,302	98,722	453,644	...	...	...	...	
		Total of the corresponding period of last year.	...	...	...	...	...	343,650	41,521	26,961	...	21,108	113,990	457,940	...	...	...	...	
Gandak	Champaran	Tour	176	...	...	4,096	1,044	...	...	...	...	...	...	...	3·05	57·19	0·00	37 20	
		Total Tour Canal	...	...	...	4,096	1,044	...	...	...	...	...	...	...	...	...	...	...	
		Total of the corresponding period of last year.	...	...	...	...	...	...	...	...	...	...	...	...	...	...	...	...	
	Saran	Saran Canals	Canals closed.																
		Grand Total	...	...	...	585,907	558,023	345,007	61,484	58,339	250	25,900	141,297	794,943	...	...	...	...	
		Grand Total of the corresponding period of last year.	...	...	...	...	...	386,786	64,490	54,574	217	21,764	141,141	767,956	...	...	...	...	

DARJEELING,
The 22nd April 1905.

W. A. INGLIS,
Secy. to the Govt. of Bengal.

GOVERNMENT OF BENGAL—IRRIGATION DEPARTMENT.

Irrigation Operat'ons of Fasl Kharif, 1904-05.

Statement in acres of crops irrigated in Canal Districts.

Nature of Crops.	Cuttack.	Balasore.	Midnapore.	Burdwan.	Hooghly.	Gaya.	Patna.	Shahabad.	Saran.	Champaran.	Total.
1	2	3	4	5	6	7	8	9	10	11	12
Garden and Orchards	...	...	...	...	...	...	...	...		...	...
Sugarcane	111	128		...	...	2,197	1,516	13,740			17,692
Cereals—											
Wheat	...	...	...	...	..	...	...	2		...	2
Barley	...	...	...	...	...	...	...	...		...	...
Rice	172,119	40,563	85,120	20,234	6,082	48,746	40,199	261,126		4,921	679,110
Miscellaneous	...	...	...	...	..	5	10	725		...	740
Pulses—											
Gram, etc.	...	...	...	...	...	...	...	...		...	...
Miscellaneous	...	...	...	...	...	72	...	11		...	83
Fodder crops—Grass, lucerne ...	...	...	...	...	...	...	...	...		...	...
Fibres—Cotton	...	...	...	...	...	...	...	...		...	...
Dyes—											
Indigo	...	...	...	...	...	...	...	...		...	...
Turmaric, etc.	...	...	...	...	...	...	...	...		...	...
Drugs—											
Opium	...	...	...	...	...	...	...	...		...	...
Tobacco, etc.	...	...	...	...	...	...	...	...		...	...
Oilseeds—											
Mustard, etc.	...	...	...	...	...	...	...	...		...	...
Castor	...	...	...	...	...	...	...	...		...	...
Miscellaneous	...	...	...	...	...	...	...	2		...	2
Hot weather	25	357	...	...	...	1,233	2,790	26,434		...	30,839
Total kharif, 1904-05 ...	172,255	41,048	85,120	20,234	6,082	52,253	44,515	302,040	...	4,921	728,468
Ditto, 1903-04* ...	165,889	40,150	93,140	21,053	7,167	48,888	42,421	304,043	...	544	723,295
Average of five years ending 1903-04	168,980	35,343	81,724	20,349	7,986	44,852	39,022	278,941	1,682	1,674	680,553

* Actual figures.

Darjeeling,
The 22nd April 1905.

W. A. INGLIS,
Secretary to the Government of Bengal.

Vital Statistics of the districts of Bengal for the month of January 1905.

Divisions.	Districts.	Population under registration.	Births. Number registered.	Births. Ratio per 1,000 of population per annum.	Cholera. Number registered.	Cholera. Ratio per 1,000 of population per annum.	Small-pox. Number registered.	Small-pox. Ratio per 1,000 of population per annum.	Plague. Number registered.	Plague. Ratio per 1,000 of population per annum.	Fever. Number registered.	Fever. Ratio per 1,000 of population per annum.	Dysentery and Diarrhœa. Number registered.	Dysentery and Diarrhœa. Ratio per 1,000 of population per annum.	Respiratory diseases. Number registered.	Respiratory diseases. Ratio per 1,000 of population per annum.	Injury. Number registered.	Injury. Ratio per 1,000 of population per annum.	Other causes. Number registered.	Other causes. Ratio per 1,000 of population per annum.	Total of all causes. Number registered.	Total of all causes. Ratio per 1,000 of population per annum.	Average of corresponding month of previous five years. Number registered.	Average of corresponding month of previous five years. Ratio per 1,000 of population per annum.	Remarks.
1	2	3	4	5	6	7	8	9	10	11	12	13	14	15	16	17	18	19	20	21	22	23	24	25	26
Burdwan	Burdwan	1,532,475	8,158	40·56	1,110	8·64	28	·12	...	...	3,528	27·60	111	·84	16	·12	18	·12	884	6·84	5,896	44·52	4,231	53·12	
	Birbhum	902,280	3,243	47·01	340	4·44	31	·36	...	...	1,886	25·08	5	·06	19	·24	14	·12	470	6·36	2,775	36·84	1,903	25·20	
	Bankura	1,116,411	3,783	40·56	51	·60	15	·12	...	...	1,864	19·92	42	·36	...	...	9	·09	729	7·80	2,720	29·16	2,656	28·44	
	Midnapore	2,789,114	11,031	47·40	2,019	8·64	40	·12	1	·003	6,344	27·12	217	·84	5	·01	18	·07	2,220	9·48	10,824	46·56	9,176	39·48	
	Hooghly, including Serampore	1,049,282	4,171	47·64	333	3·60	1	·01	3	·02	2,685	30·60	267	3·00	64	·72	19	·12	840	9·60	4,202	48·00	3,411	39·00	
Presidency	Howrah	850,514	3,463	48·84	757	10·44	3	·03	13	·12	1,224	17·16	462	6·48	46	·60	40	·60	808	11·40	3,352	47·28	2,807	39·60	
	24-Parganas	2,078,359	6,734	38·88	2,565	15·36	4	·01	21	·12	3,993	23·04	201	1·08	40	·12	84	·24	914	5·16	7,585	43·80	7,049	40·68	
	Calcutta	847,796	1,462	20·64	513	7·20	9	·12	221	3·12	430	6·00	332	4·68	377	5·28	61	·84	1,052	14·88	2,795	49·36	2,570	36·36	
	Nadia	1,667,491	6,657	47·88	914	6·48	17	·12	...	...	6,065	43·56	18	·12	6	·03	38	·12	924	6·60	7,977	57·36	5,820	41·88	
	Murshidabad	1,333,184	5,314	47·76	312	2·76	13	·10	...	...	3,351	30·36	12	·10	2	·01	6	·04	514	4·44	4,230	38·04	3,786	33·96	
	Jessore	1,813,155	6,293	41·64	1,406	9·24	...	...	...	...	9,425	62·28	36	·12	11	·07	24	·12	858	5·64	11,759	77·76	7,929	52·44	
	Khulna	1,253,043	5,927	56·76	641	6·12	...	...	...	...	2,942	28·44	15	·12	5	·03	35	·24	1,253	12·00	4,933	47·16	4,099	39·24	
Rajshahi	Rajshahi	1,462,407	6,794	55·08	306	2·40	...	...	...	...	6,250	51·48	8	·06	10	·07	22	·12	620	5·04	7,246	59·40	4,972	40·68	
	Dinajpur	1,567,080	6,962	53·44	47	·24	14	·09	...	...	5,963	45·48	3	·01	...	...	15	·12	307	2·28	6,332	48·48	5,668	43·32	
	Jalpaiguri	787,380	2,389	36·48	1	·01	3	·03	...	...	2,178	33·12	23	·36	1	·01	4	·06	57	·84	2,272	34·56	2,096	31·92	
	Darjeeling	249,117	831	39·96	...	...	...	...	...	...	594	28·56	31	1·44	...	...	7	·24	100	4·80	732	35·16	657	31·56	
	Rangpur	2,154,181	9,547	53·16	129	·60	5	·02	...	...	7,838	43·92	1	·004	...	...	12	·06	405	2·16	8,450	47·04	6,213	34·56	
	Bogra	854,533	4,197	58·92	44	·60	22	·24	...	...	2,196	30·84	3	·03	...	...	11	·12	303	4·20	2,583	36·24	2,277	31·92	
	Pabna	1,420,461	4,468	38·52	270	2·28	12	·09	...	...	6,870	57·96	19	·12	...	...	13	·10	254	2·04	7,447	62·88	4,282	36·12	
Dacca	Dacca	2,644,435	11,151	50·52	1,445	6·34	141	·60	...	...	6,985	31·68	367	1·56	23	·09	26	·10	1,897	8·52	10,864	49·20	8,978	40·68	
	Mymensingh	3,915,068	17,744	54·36	2,365	7·20	42	·12	...	...	9,500	29·04	94	·24	5	·01	34	·09	2,311	7·08	14,121	43·92	10,129	30·96	
	Faridpur	1,942,783	8,223	50·76	707	4·32	...	...	...	...	7,976	49·32	103	·60	6	·02	20	·12	1,469	9·12	10,319	63·72	7,837	48·36	
	Backergunge	2,331,752	13,317	69·72	1,471	7·68	10	·04	...	...	5,635	29·40	72	·36	11	·04	45	·12	3,349	17·52	10,589	55·44	8,493	44·40	
Chittagong	Tippera	2,117,991	9,987	56·52	1,012	5·64	10	·04	...	...	5,295	29·76	97	·48	...	...	35	·12	1,455	8·16	7,874	44·52	8,329	33·00	
	Noakhali	1,141,728	6,615	69·48	371	3·94	1	·009	...	...	2,737	28·68	12	·12	...	...	29	·24	840	8·76	3,930	41·28	3,873	40·68	
	Chittagong	1,353,250	5,838	51·60	155	1·36	...	...	...	...	4,142	36·72	33	·24	...	...	27	·12	207	2·52	4,084	41·52	3,524	31·20	
	Chittagong Hill Tracts																								
Patna	Patna	1,624,985	6,848	50·12	12	·08	32	·19	4,128	30·48	1,918	14·16	380	2·76	142	·96	59	·36	1,645	12·12	8,316	61·32	6,181	45·60	
	Gaya	2,059,933	9,867	57·36	5	·02	8	·04	2,144	12·48	4,267	24·84	40	·19	15	·08	60	·24	1,069	6·12	7,609	44·28	4,665	27·12	
	Shahabad	1,962,696	8,635	52·80	...	...	26	·12	3,466	21·12	4,056	28·44	10	·06	4	·02	31	·12	1,279	7·80	9,472	57·84	4,434	27·00	
	Saran	2,409,509	11,131	55·20	...	...	8	·03	7,804	38·76	3,500	17·40	363	1·80	72	·24	61	·24	3,562	17·64	15,362	76·44	7,133	35·52	
	Champaran	1,790,463	6,921	46·32	...	...	7	·05	...	...	2,829	18·96	9	·06	...	...	37	·24	1,113	7·44	3,995	26·73	3,815	25·56	
	Muzaffarpur	2,754,790	11,810	51·36	...	...	21	·08	796	3·36	4,635	20·04	49	·12	...	...	42	·12	1,500	6·48	7,033	30·60	5,722	24·84	
	Darbhanga	2,912,611	10,857	44·64	2	·007	2	·007	513	2·04	4,985	20·52	124	·48	...	...	31	·12	1,176	4·80	6,845	28·20	6,335	26·04	
Bhagalpur	Monghyr	2,068,804	10,146	58·80	2	·01	30	·12	1,238	7·08	3,961	22·92	11	·06	7	·03	48	·24	2,313	13·32	7,619	44·16	4,321	24·96	
	Bhagalpur	2,088,953	7,124	40·92	7	·03	22	·12	485	2·76	4,631	26·64	26	·12	4	·01	31	·12	751	4·20	5,977	34·32	4,512	25·80	
	Purnea	1,874,794	6,440	41·16	2	·01	55	·48	...	...	6,635	42·36	6	·03	...	...	11	·06	196	1·20	6,932	44·28	5,508	35·16	
	Malda	884,030	4,307	58·44	97	1·20	1	·01	...	...	2,328	31·56	4	·04	2	·02	4	·64	392	5·28	2,328	38·28	2,552	34·56	
	Sonthal Parganas	1,809,737	6,143	40·68	30	·19	8	·04	...	...	2,703	17·88	32	·12	2	·01	37	·24	382	2·52	3,194	21·12	2,554	16·92	
Orissa	Cuttack	2,062,758	8,632	50·16	236	1·52	5	·02	...	...	2,737	15·84	575	3·24	76	·36	67	·36	2,933	17·04	6,628	38·52	6,844	39·72	
	Balasore	1,071,197	4,225	47·28	455	5·16	5	·04	...	...	1,473	16·44	177	1·92	1	·01	25	·24	1,700	18·96	3,849	43·08	3,459	38·64	
	Puri	1,017,284	3,866	45·60	404	4·68	186	2·16	...	...	964	11·28	395	4·56	125	1·44	33	·36	1,679	19·80	3,781	44·52	3,277	38·64	
	Angul and Khondmals																								
Chota Nagpur	Hazaribagh	1,177,961	5,750	58·80	...	...	...	...	78	·79	2,198	22·32	16	·12	...	...	28	·24	743	7·56	3,069	31·08	2,043	20·76	
	Ranchi	1,187,925	5,007	50·52	...	...	1	·009	...	...	1,689	17·04	50	·48	4	·03	27	·24	945	9·48	2,716	27·36	1,975	19·92	
	Palamau	602,686	3,355	64·92	...	...	...	...	1	·01	1,162	22·44	12	·12	3	·04	12	·12	401	7·68	1,591	30·72	1,339	25·92	
	Manbhum	1,301,364	4,312	39·72	120	1·08	...	...	...	...	2,198	20·16	28	·12	2	·01	16	·12	633	5·76	2,988	27·48	1,865	17·16	
	Singhbhum	613,579	2,145	41·88	...	...	...	...	2	·03	1,091	21·84	21	·36	...	...	15	·24	175	3·36	1,304	25·44	1,020	19·92	
	Total	74,429,138	3,09,012	49·80	23,415	3·24	330	·12	20,911	3·36	1,78,686	28·68	4,909	·72	1,102	·19	1,321	·19	48,727	7·92	2,77,835	44·76	2,09,817	33·72	
	Average of corresponding month of previous five years	...	2,58,377	41·64	11,675	1·80	2,329	·36	4,218	·60	1,45,066	23·28	5,137	·72	422	·06	1,186	·19	38,645	6·36	2,09,817	33·72	...	...	
	Difference + or −	...	+10,635	+8·16	+8,740	+1·44	−1,069	−·24	+16,693	+2·76	+33,575	+5·40	−228	Equal	+680	+·06	+135	Equal	+10,082	+1·56	+68,018	+11·04	...	...	

OFFICE OF SANITARY COMMISSIONER FOR BENGAL,
The 15th April 1905.

W. W. CLEMESHA, CAPTAIN, I.M.S.,
Offg. Sanitary Commissioner for Bengal.

Vital Statistics of Towns in Bengal with a population of 20,000 and over during the month of January 1905.

District.	Town.	Population under registration.	Births.		Deaths.																Average of corresponding month of previous five years.		Remarks.
					Cholera.		Small-pox.		Plague.		Fever.		Dysentery and Diarrhœa.		Respiratory diseases.		Injury.		Other causes.		Total of all causes.				
			Number registered.	Ratio per 1,000 of population per annum.	Number registered.	Ratio per 1,000 of population per annum.	Number registered.	Ratio per 1,000 of population per annum.	Number registered.	Ratio per 1,000 of population per annum.	Number registered.	Ratio per 1,000 of population per annum.	Number registered.	Ratio per 1,000 of population per annum.	Number registered.	Ratio per 1,000 of population per annum.	Number registered.	Ratio per 1,000 of population per annum.	Number registered.	Ratio per 1,000 of population per annum.	Number registered.	Ratio per 1,000 of population per annum.	Number registered.	Ratio per 1,000 of population per annum.	
1	2	3	4	5	6	7	8	9	10	11	12	13	14	15	16	17	18	19	20	21	22	23	24	25	26
Burdwan	1. Burdwan	39,013	61	17·76	13	4·44	...	...	...	...	84	28·68	16	5·40	2	·60	...	...	16	5·40	131	44·88	113	38·64	
Bankura	2. Bankura	20,737	38	21·96	...	...	...	...	...	...	15	8·64	5	2·88	...	...	...	...	13	7·44	33	19·08	35	20·16	
Midnapore	3. Midnapore	33,140	83	30·00	13	4·32	...	...	...	...	59	18·96	17	6·12	...	...	...	...	30	10·80	100	39·36	102	34·96	
Hooghly	4. Hooghly and Chinsura	39,383	93	37·92	19	7·39	...	...	3	1·20	77	31·44	20	11·76	8	3·24	4	1·56	22	8·88	161	65·64	127	51·84	
	5. Serampore	44,451	90	24·24	12	3·12	1	·24	...	...	60	16·08	26	6·96	...	...	4	·96	19	5·04	122	32·88	136	36·60	
Howrah	6. Howrah	157,594	339	25·80	109	8·28	2	·12	12	·84	215	16·32	115	8·76	13	·96	25	1·80	181	13·68	672	51·12	612	46·56	
24-Pergunnas	7. Cossipore-Chitpur	40,750	32	15·24	3	1·44	...	...	...	...	25	7·32	4	1·08	...	...	...	...	8	2·28	42	12·36	53	15·60	
	8. Manicktala	32,397	48	17·76	15	5·52	...	...	...	...	24	7·68	7	2·52	...	...	...	...	8	2·88	51	18·84	37	13·68	
	9. South Suburban	26,574	36	32·12	10	4·20	1	·36	...	...	58	26·28	14	6·36	...	...	3	1·32	3	1·32	89	40·44	91	41·40	
	10. Garden Reach	20,211	55	23·28	10	4·20	1	·36	...	...	21	8·88	5	3·36	1	·36	...	...	7	2·88	48	20·40	56	23·76	
	11. Barnagore	24,833	37	17·40	1	·36	...	...	...	...	29	13·68	7	3·24	...	...	...	...	10	4·68	47	22·08	84	39·60	
	12. Bhatpara	21,140	40	22·20	20	16·08	...	...	...	...	23	12·72	10	5·52	1	·48	2	1·08	9	·41	74	41·16	50	32·76	
Calcutta	13. Calcutta	847,796	1,102	20·64	513	7·20	9	·12	221	3·12	430	6·00	332	4·68	377	5·28	61	·84	1,033	14·88	2,994	42·36	2,570	36·36	
Nadia	14. Krishnagar	24,547	59	23·36	44	21·48	1	·48	...	...	48	23·40	2	·96	...	...	1	·48	14	6·84	110	53·76	73	35·64	
	15. Santipur	25,498	116	48·96	35	15·60	...	...	...	...	50	22·20	1	·36	...	...	...	...	25	11·04	111	49·44	91	40·56	
Murshidabad	16. Berhampore	29,397	41	20·16	5	2·40	...	...	...	...	88	43·20	2	·96	2	·96	1	·48	4	1·92	102	50·16	79	38·76	
Rajshahi	17. Rampur Boalia	21,589	51	28·32	...	...	...	...	...	...	35	19·44	1	·48	3	1·56	...	...	11	6·00	50	27·72	68	37·68	
Pabna	18. Sirajganj	23,114	47	24·36	...	...	...	...	...	...	34	17·64	2	·96	...	...	...	...	2	·96	38	19·68	42	21·72	
Dacca	19. Dacca	90,542	294	38·88	8	·96	60	6·60	...	...	120	15·84	19	2·40	...	...	2	·96	21	10·20	55	26·88	269	35·64	
	20. Narayanganj	24,472	72	35·28	2	·96	1	·48	...	...	21	10·20	8	3·84	...	...	...	...	8	4·32	44	23·76	44	23·76	
Chittagong	21. Chittagong	22,140	23	11·88	8	4·32	...	...	...	...	27	14·52	1	·48	...	...	...	...	214	18·96	1,610	89·88	1,204	107·16	
Patna	22. Patna City	134,786	247	30·84	4	·24	2	·12	548	48·60	160	14·16	60	5·28	20	1·68	4	·24	52	13·80	93	24·72	270	71·88	
	23. Bihar	46,063	172	51·72	1	·24	...	...	13	3·36	19	5·04	4	·96	1	·24	3	1·68	40	14·16	165	58·68	130	46·20	
	24. Dinapore	33,609	59	21·00	3	·96	1	·24	58	20·64	62	18·48	6	2·04	...	...	...	...	84	14·04	303	51·00	411	69·12	
Gaya	25. Gaya	71,288	203	34·08	3	·84	1	·12	84	9·00	125	21·48	15	2·52	3	·72	...	...	9	2·28	404	105·00	163	39·72	
Shahabad	26. Arrah	46,170	62	17·88	...	...	8	2·04	367	93·28	14	3·60	2	·72	...	...	...	...	10	5·04	555	281·64	30	19·08	
	27. Sasaram	23,944	38	19·20	...	...	...	...	477	242·04	68	34·44	...	...	...	...	2	·48	31	8·04	488	127·56	352	91·92	
Saran	28. Chapra	45,861	179	46·68	...	...	...	...	405	105·84	40	10·44	10	2·52	...	...	...	...	27	13·08	56	27·12	58	28·08	
Champaran	29. Bettiah	24,696	68	33·00	...	...	...	...	...	...	28	13·56	1	·48	...	...	4	·96	57	14·88	374	98·28	127	33·36	
Muzaffarpur	30. Muzaffarpur	45,617	83	21·72	...	...	...	...	294	77·28	17	4·44	2	·48	...	...	1	·48	25	13·92	123	68·40	1 2	62·76	
	31. Hajipur	21,498	101	56·64	...	...	...	...	89	58·64	17	9·48	10	5·52	...	...	...	...	133	27·60	229	41·40	285	51·60	
Darbhanga	32. Darbhanga	66,344	193	34·92	...	...	1	·12	35	6·24	35	6·24	5	·84	...	...	...	...	46	15·36	516	172·20	*244	81·60*	
Monghyr	33. Monghyr	35,880	131	46·44	...	...	...	...	446	149·16	13	3·96	5	1·56	5	1·56	1	·24	62	9·72	327	35·88	186	29·40	
Bhagalpur	34. Bhagalpur	75,760	164	25·92	6	·84	4	·60	68	9·96	78	12·00	9	1·32	4	·60	3	·36	69	16·08	151	35·16	128	29·88	
Cuttack	35. Cuttack	51,354	145	33·84	...	...	...	...	...	...	49	11·40	27	6·24	6	1·32	...	...	18	10·32	58	32·16	46	26·40	
Balasore	36. Balasore	26,880	55	130·56	2	5·16	1	·48	...	...	24	13·68	3	1·68	...	...	1	·48	35	8·40	108	26·16	138	32·04	
Puri	37. Puri	49,324	61	14·76	7	1·68	...	...	...	...	41	9·56	20	4·80	2	·48	3	·72	6	3·96	25	12·48	31	15·60	
Ranchi	38. Ranchi	23,810	30	9·96	...	...	...	...	...	...	15	7·44	...	...	...	...	2	·96							
	Total of all towns with a population of 20,000 and over	2,418,299	5,275	26·16	884	4·32	84	·36	3,083	15·12	2,326	11·52	956	3·96	460	2·28	136	·60	2,506	12·36	10,263	50·88	8,748	43·44	
	Average of the corresponding month of previous five years	.....	4,500	24·72	270	1·32	163	·72	110	4·80	3,334	17·52	938	4·56	245	1·20	83	·36	2,535	12·48	8,748	43·44			
	Difference + or −	.....	+775	+1·44	+614	+3·00	−79	−·36	+2,973	+10·32	−1,008	−6·00	−132	−·60	+215	+1·08	+53	+·24	−19	−·12	+1,517	+7·44			

Office of Sanitary Commissioner for Bengal,
The 15th April 1905.

W. W. Clemesha, Captain, I.M.S.,
Sanitary Commissioner for Bengal.

	Mitra, Batakrishna ...	19-3	Hindu School.
	" Gopalchandra* ...	15-11	Khulna Zilla School.
	" Haridas ...	15	Arbalia J. V. H. E. School.
	" Haricharan ...	15-1	Diamond Harbour H. E. School.
990	" Ganeschandra ...	15-1	Gobardanga H. E. School.
	" Hariprasad ...	17-2	Bankura Zilla School.
	" Hiranmay ...	16-6	Bagerhat H. E. School.
	" Hrishikes ...	15	Jheria H. Shool.
	" Jitendranath ...	18-5	Mymensingh Zila School.
	" Jnanprakas ...	16-11	Darbhanga Northbrook School.
	" Jogindranath ...	16-6	Amta H. E. School.
	" Jyotishchandra	15-4	Syambazar Vidyasagar Institution.
	" Jyotishchandra*	18 8	Silchar Govt. H. School.
	" Nageschandra ...	19-9	Burdwan Raj Collegiate School.
1000	" Narendranath ...	14-6	New Indian School.
	" Narendranath ...	16-1	Central Collegiate School.
	" Phanindranath ...	16-5	Jaynagar Institution.
	" Prabhatchandra	16-3	Hare School.
	" Prabodhchandra	16-1	Hughli Collegiate School.
	" Pramathabhushan	15-2	Magura H. E. School.
	" Rasikchandra ..	20-10	Gaibandha H. E. School.
	" Satyendrachandra	14-2	Noakhali Zila School.
	" Srischandra ...	16-10	Burdwan Raj Collegiate School.
	" Srischandra ..	19-2	Miksimil H. E. School.
1010	" Subodhchandra* ...	18-2	Panihati Trannath H. E. School.
	" Surendranath ...	21	Serampur College.
	" Surendranath* ...	15-7	Metropolitan Institution.
	" Susilkumar ...	15-3	Uluberia H. E. School.
	" Tejendranath ...	17-3	Rampurhat H. E. School.
	" Upendranath ...	15-1	Phultala H. E. School.
	Mobarok Ali Miah ...	19-11	Subarnakhali S. M. H. E. School.
	Modasser Shaikh* ...	18-3	Khulna Zila School.
	Mohamad Ather	16-2	Jajpur H. E. School.
	Mohammad Ibrahim ...	14-10	Muzaffarpur Zila School.
1020	Mohammod Waezuddin	16-6	Bankipur Anglo-Sanskrit School.
	Moniruddin Ahammed ...	17	Comilla Yusuff H. E. School.
	Moreshwar Narayan Mendhiker.	18-6	F. C. Institution, Nagpur.
	Mra Aung	18-10	St. John's College, S. P. G., Rangoon.
	M. Selvadurai	17-2	Point Pedro Hindu H. School.
	Mudi, Nilmani ...	18-3	Santipur Municipal School.
	Muhamad Ameen Khairati Shaikh.*	18	K. B. B. P. and Mhow Zoroastrian, H. School.
	" Abdul Jabbar ...	16-2	Pabna Zila School.
	" Akram Ali ...	18-9	Arrah Zila School.
	" Fazlullah	16-7	Calcutta Madrasa.
1030	" Hossin	16-6	Chittagong Madrasa.
	" Ibrahim	18-4	City Collegiate School.
	" Islam	14-6	Palamow Zila School.
	" Ismail ...	18-11	Pabna H. E. School.
	" Khabirul Huque	17-5	Monghyr Training Academy.
	" Khalid	15-7	Arrah K. I. Academy.
	" Osmanuddin Chakalder.	18-3	Talirbagh K. M. D. M. Institution.
	" Rahim Dad Siddique.	16-3	Narail Sub-divisional H. E. School.
	" Rashed	16-11	Khagra L. M. S. School.
	Muhammad Safar Ali ...	18-11	Comilla Victoria Collegiate School.
1040	" Samiul Haq ...	15-3	T. K. Ghosh's Academy.
	" Shariff	17-4	Ditto ditto
	Mukhopadhyay, Abhayapada*	15	Rampurhat H. E. School.
	" Abinaschandra.	20-7	Dacca Pogose School.
	" Achintyakrishna.	13-10	Midnapur Collegiate School.
	" Adityanarayan.	16-4	Baidyabati H. E. School.
	" Annadaprasad	17-11	Rampurhat H. E. School.
	" Asutosh* ...	17-6	Howrah Zila School.
	" ...ntaku...	15-2	General Assembly's Institution.
	" ...Dattabani ...	15-10	Hare School.
050	" ...ttagupta ... Bh... cha... Du...	18-9	Mankar H. E. School.
	" Bhu...bhushan	...	Gobardanga H. E. School.
	" Bibhutibhushan.	16	Barrackpur Government School.
	" Bijaygopal ...	16-5	Syambazar Vidyasagar School.
	" Bikarlan ..	19-2	Kuch Kuchia H. E. School.
	Mukhopadhyay, Binodgopal ...	18-4	Khiddirpur High ... School.
	" Chandicharan*	17-1	Chinsura United F. C. Institution.
	" Charuchandra (sr.) ...	15-7	Bandgora H. E. School.
	" Charuchandra (jr.) ...	19-1	Ditto ditto.
	" Charuchandra	19-10	Seakhala H. E. School.
060	" Chintaharan* ..	14	Bajrajogini H. E. School.
	" Dhanendranath* .	17-3	Hare School.
	" Dhirendranath	15-2	South Suburban School, Bhowanipur.
	" Dineschandra	19-1	Pingna H. E. School.
	" Gaganchandra	16-5	Giridih H. E. School.
	" Gopendranath	19-3	Lakshmipasa D. C. Institution.
	" Haramohan* ...	19-11	Bankura Hindu H. E. School.
	" Ishanchandra	14-11	Gaya Sahebganj H. E. School.
	" Jagadischandra*	19	Outshahi R. N. H. E. School.
	" Jatindranath .	16	Syambazar Vidyasagar School.
70	" Jatindranath ...	21	Basirhat H. E. School.
	" Jitendramohan	17	Ulpur P. C. H. E. School.
	" Jnanchandra ...	14-11	Krishnagar Collegiate School.
	" Jnanendranath* ...	16-6	Chanchal Sidheswari Institution.
	" Jogeschandra	16-9	Ichapur H. E. School.
	" Kantichandra*	13-2	Jangipur H. E. School.
	" Khagendranath	18-6	Baranagar Victoria School.
	" Lalitmohan ...	17	Lohajang High School.
	" Lalitmohan II	16-5	Tulasar Gurudas H. E. School.
	" Manindranath	19-2	Rajshahi Collegiate School.
80	" Manoranjan ...	15-11	Feni H. E. School.
	" Nagendranath	19-11	Senhati High School.
	" Nagendranath	19-2	Jhikra H. E. School.
	" Nakuleswar	16-5	Narail Victoria Collegiate School.
	" Nalindranath	16	Chinsura Training Academy.
	" Narayanchandra ...	15-1	Calcutta Town School.
	" Nilmani ...	14-11	Muragacha H. E. School.
	" Nirajakanta ...	17-4	Cuttack Town Victoria H. E. School.
	" Nirmalchandra	17-5	Dhubri High School.
	" Nisikanta ...	18-5	Hare School.
90	" Phanindranath	18-11	Ula H. E. School.

	Mukhopadhyay, Prabodhchandra*	17-10	Ranchi Zilla School.
	" Prabodhchandra ...	17-2	Ripon Collegiate School.
	" Pramodaranjan* ...	18-1	C. M. S. High School, Krishnagar.
	" Pulinchandra*	16-6	Supaul Williams' H. E. School.
	" Pulinchandra*	15-8	Purnea Zilla School.
	" Ranajitkumar	17-7	Uttarpara Government School.
	" Sahayram ...	17-5	Bhanderdihi H. E. School.
	" Santoshkumar* ..	19-9	Balagarh H. E. School.
	" Sasadhar* ...	18-6	Munshiganj H. E. School.
1100	" Satkari ..	19-1	Nibadhai H. E. School.
	" Satyabhushan	17-11	Hindu School.
	" Satyapada ...	20	Howrah Bible H. C. E. School.
	" Satyendrakumar	16-2	Bijhari H. E. School.
	" Srischandra ...	17	Nawab's High School, Murshidabad.
	" Sureschandra	19	Kisorganj H. E. School.
	" Susilchandra ..	16-2	Saran Academy.
	" Susilkumar ...	17-5	Sanskrit Collegiate School.
	" Tarasankar ...	14-5	Calcutta Aryan Institution.
	" Tinkari ..	16	Calcutta Town School.
1110	" Trilokinath ..	16-2	Ripon Collegiate School, Howrah Branch.
	" Umeschandra	18-10	Bajrajogini H. E. School.
	Mukhoti, Haranchandra	18-7	Chachartala S. H. E. School.
	" Herambanath ...	16-3	Palang H. E. School.
	Muneshwar Prasad ...	19-6	Hatwa Eden School.
	Munshi Helaluddin Ahmed ...	21	Mik Simil H. E. School.
	Mustaphi, Praphullachandra ...	15-6	Jenkins School, Cooch Behar.
	" Sisirkumar ...	16-2	Sutragarh M. N. High School.
	Nag, Praphullachandra .	17-7	Jamalpur Donough H. E. School.
	Nagchaudhuri, Manmathanath	19-10	Jaypur Lohagara Institution.
1120	" Upendrachandra	14-10	Dacca Collegiate School.
	Najmur Rahman	14-5	Noakhali Zilla School.
	Nanda Birajacharan ...	16-11	Hindu School.
	Nandakishore Lall ...	17-10	Tikari Raj H. E. School.
	Nandi, Bijaykrishna ...	18-11	Metropolitan Institution
	" Gangadhar ...	14-6	L. M. S. Institution, Bhawanipur.
	" Jyotishchandra ...	18-2	Kisorganj H. E. School.
	" Kumudchandra ...	16	Brahmanberia Edward Institution.
	" Narendranath ...	15-7	Morton Institution.
	" Nareschandra ...	15-10	Brahmanberia Edward Institution.
1130	" Satischandra ...	16-10	" Annada H. E. School.
	" Surendranath .	17-3	Comilla Yusuff H. E. School.
	Narain Dass ...	18	Patna Diamond Jubilee H. E. School.
	Narayan Vishnoo Machway ..	16-9	Kamptee High School.
	Narhari Ramchandra Naidu*	16	Ditto.
	Narainsingh Prasad ..	17-6	Patna M. A. A. School.
	Nath, Hiranmay ...	16-6	Barisal Zilla School.
	" Santoshkumar ...	17	Mohestala H. E. School.
	Nayak, Gokulbihari ...	17-11	Searsole H. E. School.
	" Jadupati	17-3	Kuchkuchia H. E. School.
1140	Nilkant Balvant D ...	18	Kamptee High School.
	Niyogi, Bijanbihari ...	16-7	Torakona H. E. School.
	" Prabodhchandra	19-7	Bangabasi Collegiate School.
	" Sureschandra ...	16-6	Manikganj H. E. School.
	Obedali Mir	21-3	Suri Gadadhar Institution.
	Ojha Sitaram	19-2	B. B. Collegiate School, Muzaffarpur.
	Omed Ali	20-4	Magura H. E. School.
	On Ngwe*	17-3	Rangoon Collegiate School.
	Oudh Behari Lal ...	18-3	Muzaffarpur Zilla School.
	Pabulkar Vinayak Pandharinath	17-4	Anand H. School, Dhar.
1150	Pal, Akinchanbala*	..	Bankipur Female H. School.
	" Bharatiaj	21-10	Central Collegiate School.
	Pal, Birendranath ...	17-11	Basirhat H. E. School.
	" Gaurbinod	18	Lohajang High School.
	" Girigobinda	19	Hindu School.
	" Haradhan	18-3	Bantra H. E. School.
	" Harendrakisor* ...	17-4	Nabinagar H. E. School.
	" Kedarnath	17-3	Rajshahi Collegiate School.
	" Lakshmikanta ...	16-10	Barasat Government School.
	" Lakshminarayan* ...	13-4	Bali Rivers Thompson School.
1160	" Mahimchandra ...	17-10	Brahmanberia Annada H. E. School.
	" Makhanlal	16	Agartala High School.
	" Manmathanath ..	20-7	Panihati Trannath H. E. School.
	" Nripendrachandra ...	18-4	Mymensingh Mrityanjay School.
	" Nrityagopal ...	20-1	Khulna Zilla School.
	" Prakaschandra	16	Bagnan H. E. School.
	" Rajanikanta	18-11	Kisorilal Jubilee School, Dacca.
	" Rajaniranjan ...	16	Raozan R. R. Institution.
	" Saradacharan ...	20	Kalighat High School.
	" Saratchandra ...	17-1	Barrackpur Government School.
1170	" Siddheswar ...	19	Telinipara Bhadreswar School.
	" Upendrachandra ...	20-4	Imperial Seminary, Dacca.
	Palchaudhuri, Brahmanath ..	16-3	Ranaghat H. E. School.
	Pa... ...ker Narayan Ramkrishna	16-8	Neill City High School, Nagpur.
	Pande, Ba...lkrishna Narayan ...	18 2	F. C. Institution, Nagpur.
	" Braja...gopal ...	18-11	Rajshahi Collegiate School.
	" Gangadh... ...r Krishna ...	21-4	F. C. Insti...on, Nagpur.
	" Ramtapasya ...	16-4	Muzaffarpur Je...erjee's Seminary.
	" Shyamrathi ...	20-6	Darbhanga Northbrook School.
	Pani, Krishnachandra ...	20-4	Bhadrak H. E. School.
1180	Pattalwar Trimbak Ramchandra ...	16-10	Neill City High School, Nagpur.
	Permeshwer Prosad ...	20	B. N. Collegiate School, Bankipur.
	Rplie, Sibaprasad ...	18-4	Howrah Belilios Institution.
	M K. Subramanyam ...	19	Point Pedro Boys' High School.
	Poddar Narendrakrishna	13-9	Chittagong Collegiate School.
	Po Hnit	18-3	Moulmein Government H. School.
	Po Kaing	20-4	St. John's College, S.P.G., Rangoon.
	Po Lay	22	Rangoon Collegiate School.
	Po Maung	19	Bassein Sgaw Karen High School.
	Po Thaung	18	Rangoon Collegiate School.
1190	Pradhan, Hemchandra*	18-9	Mahisadal Raj H. E. School.
	Paramanic Hajarilal ..	15-1	Santipur Oriental Academy.
	" Kshetramohan	17-1	Nawabganj Sridhar Bansidhar School.
	" Lakshminarayan	19-4	Albert Victoria Institution, Burdwan.
	" Purnachandra	19-9	Sutragarh M. N. High School.
	" Primo S. .	16-6	St Paul's High School, Rangoon.
	Pujari Prasannakumar	16-6	Sambalpur High School.
	Purkayastha Kshirodchandra*	15-9	Sylhet Government High School.
	Purushothama Iyer Mahaganapathy Iyer	19-6	Jaffna Hindu Collegiate School.
	Quazi Eusuf Ali	15-10	Midnapur Collegiate School.
1200	Rafiuddin	16-9	Monghyr Zilla School.
	Raghubir Saran	14-7	Darbhanga Northbrook School.
	Raghunjee Desai ..	19-5	M. L. Jubilee Institution.
	Raghunandan Prasad .	19-6	R. N. Collegiate School, Bankipore.
	" Sahay ...	18-9	Madhipura High School.

* Passed in drawing.

	Raghunath Bhasker Kelkar	19	Sitabaldi R. B. B. Patwardhan H. School.
	" Sitaram Devalkar	16-6	Chanda Jubilee High School.
	Raha, Jatindranath	17-2	Naldha H. E. School.
	" Hemlal*	16	Ditto.
	" Nikunjabihari	18-6	Ilsoba Mondiya H. E. School.
1210	" Pramathanath*	17	Naldha H. E. School.
	" Ratikanta	22	Ditto.
	Rahmatulla	17-9	Sylhet Government High School.
	Rajeswar Prasad	14-11	T. N. Jubilee Collegiate School.
	Rajeswari Prasad	16-3	Arrah Zilla School.
	Rajeswari Prasad Varma	19-5	Ditto.
	Rajguru, Manindranath	19-11	Sonamukhi Jubilee H. E. School.
	Rakshit, Jitendranath	17-9	Morton Institution.
	Ramanand Lal	18-1	Chapra Zilla School.
	Ram Bahadur	18-5	Giridhi H. E. School.
1220	Ram Bilas	18	Indore Residency School.
	Ramchandra Pershad	17	Gaya Town School.
	" Prasad	16	Private Student Roll Pat. P. 12.
	Rama Chandra Prashad	23-3	Bhagalpur Madrassa.
	Ramchandra Prasada Varma	16-10	Arrah Zilla School.
	Ram Dayal	17-6	Sehore High School.
	Rameswar Prasad	17-6	Bahar H. E. School.
	" Prasad Sinha	18-1	Chapra Zilla School.
	Ramjiwon Pd	18	Hajipur H. E. School.
	Ramkaran Lall	23	Saraswati Academy, Darbhanga.
1230	Ram Lala	17-10	Arrah Zilla School.
	Ram Narain Singh	16-4	Darbhanga Northbrook School.
	Ramnarayan Lall	21-11	Arrah Town School.
	Ramrao Malhurrao Arvicar	19	Neill City High School, Nagpur
	Ram Tahal Ram	22	D. N. M. Coll. School, Hazaribagh.
	Rana Lake Shumsher Jung	16-2	Private Roll Cal., P. 1.
	Ranaq Lall	18	Motihari Zilla School.
	Randhir Prasad	20-10	Dumraon Raj H. E. School.
	Ray, Abanimohan	17-10	Ramgopalpur P. J. K. H. E. School.
	" Abinashchandra	16-4	Dinajpur Zilla School.
1240	" Adinath	15-2	Dinajpur Zilla School.
	" Akshaykumar	19-1	Private Roll Cal., P. 12.
	" Anadinath	16-2	Dinajpur Zilla School.
	" Anukulchandra	17	Darbhanga Northbrook School.
	" Aswinikanta	16	Panditsar H. E. School.
	" Atulchandra*	18-3	Garbeta H. E. School.
	" Bankimbihari	15-11	Muzaffarpur Mukerjee's Seminary.
	" Baradaprasad	19-5	Godda Coronation H. E. School.
	" Basantakumar	10-3	Bangabasi Collegiate School.
	" Bijaychandra*	13-10	Ukil's Institution Dacca.
1250	" Bilaschandra	18-9	Wazirpur W. B. Union Institution.
	" Debendrachandra	18	Mymensingh Mrityunjay School.
	" Debendranath	20	City Collegiate School.
	" Debendranath	18-7	Katak P. M. Academy.
	" Dharmadas	20-2	Purvasthali Victoria Institution.
	" Dhirendranarayan	15-4	Goalpara High School.
	" Dwijendranath	17-11	Pingna H. E. School.
	" Girindranath	16-7	Baranagar Victoria School.
	" Gobindabhushan*	17-11	Birbhum Zila School.
	" Haradhan	18-3	Sekandarpur Rai K. P. Pal's Free H. E. School.
1260	" Hemantakumar*	21-9	Madhipura High School.
	" Hemantakumar*	15-10	Senhati High School.
	" Hemangshumohan	13-2	Gauripur P. C. Institution.
	" Hiranyakumar	20-3	Bhagyakul H. L. H. E. School.
	" Indubhusan	17-3	Senhati High School.
	" Jagadindunarayan	17-8	Katwa H. E. School.
	" Jagadishchandra	17-5	Sahebgunge Edward Institution.
	" Jaminikumar	21	Dhalla H. E. School.
	" Jamininath	18-3	Khagra L. M. S School.
	" Jatindralal	15	Gabha High School.
1270	" Jatindamohan	17-4	Mymensingh Mrityanjay School.
	" Jatindranath*	15-4	Rajshahi Collegiate School.
	" Jaygopal	16-8	Bangaon H. E School.
	" Jogendrachandra	22-10	Dacca Pogose School.
	" Jogeshchandra*	18-10	Chittagong Collegiate School.
	" Jogeschandra	17-10	Santosh Jahnabi School.
	" Jyotishchandra	18	Ukil's Institution, Dacca.
	" Kalipada	14-5	Sailakupa H. E. School.
	" Kasiswar	19-3	Bajitpur H. E. School.
	" Kisorimohan	17-4	Tangail Bindubasini H. E. School.
1280	" Kisorimohan	18-11	Jhikra H. E. School.
	" Kumudbandhab*	18-9	Garbeta H. E. School.
	" Lalmohan	15-10	Comilla Zilla School.
	" Manmathanath	14-6	Oriental Seminary.
	" Manmathanath	14-11	Dacca Pogose School.
	" Nagendramohan	19-10	Ditto.
	" Nagendranath	18	Serampore Union Institution.
	" Nanilal	16-8	Hare School.
	" Narendranarayan	15-7	Jiaganj Edward Coronation Institution.
	" Nareshchandra	19-3	Shyamagram M. K. H. E. School.
1290	" Nikhilananda	20-6	Pabna H. E. School.
	" Panchanan	14-7	Okersa H. E. School.
	" Pasupatinath*	17	Salkia A. S. School.
	" Phanibhushan	14-6	M. C. Collegiate School, Sylhet.
	" Phanibhushan*	16-5	Mymensingh Zilla School.
	" Pramathanath	17-9	Chandpur H. J. H. E. School.
	" Purnachandra	19-11	R. K. H. E. School, Muktagacha.
	" Radharaman	17-10	Kirnahar Sibchandra H. C. E. School.
	" Rakhalchandra	17-3	Sanktaria H. E. School.
	" Rakhaldas	17-1	Diamond Harbour H. E. School.
1300	" Sailajaranjan*	15	Krishnagar Collegiate School.
	" Saratchandra	18-2	Garden Reach C. M. S. High School.
	" Saratchandra	16	Burdwan Raj Collegiate School.
	" Saratchandra	15-9	Deoghar H. E. School.
	" Saratchandra	19-11	Dumka Zilla School.
	" Sasibhushan	19	Rampurhat H. E. School.
	" Sasibhushan	22-9	German Mission H. E. School, Ranchi.
	" Satischandra	19-5	General Assembly's Institution.
	" Satyaranjan	15-11	Narail Victoria Collegiate School.
	" Somendranath	17-11	Jara H. E. School.
1310	" Sudhangsuchandra	15-10	Metropolitan Institution.
	" Surendranath	19-4	Searsole H. E. School.
	" Sureshchandra, I	18-3	City Collegiate School, Mymensingh Branch.
	" Tirthapada	18	F. C. of Scotland's Institution, Duff College.
	" Upendrachandra	19-11	City Collegiate School, Mymensingh Branch.
	" Upendralal*	16-1	Munshiganj H. E. School.
	" Upendranath	15-9	Bera B. H. H. E. School.
	Raychaudhuri, Bhupeshchandra	19-4	Calcutta High School.
	" Hemchandra	16-4	Khararia H. E. School.
	" Hiranmay	18-3	Hindu School.
1320	Raychaudhuri, Japendranath	18-9	St. Mary's School, Bhawanipur.
	" Kshitischandra	14-8	Khararia H. E. School.
	" Manmathanath*	16-9	Barisa H. E. School.
	" Nalindrakumar	15-2	Calcutta Town School.
	" Praphullachandra*	16	Brajamohan Institution, Barisal.
	" Praphullakumar	16-9	Khararia H. E. School.
	" Ramakanta	15-11	Berhampur Collegiate School.
	" Ramsakal	25-7	Dumraon Raj H. E. School.
	" Saileschandra	17-7	Kustea H. E. School.
	" Sailesnath	13-8	Brajamohan Institution, Barisal.
1330	" Santimay	13	Majdia Rail Bazar H. E. School.
	" Sureschandra	19-7	Lakshmannath H. E. School.
	Raygupta, Surendralal*	17-9	Mathabhanga H. E. School.
	R. J. S. M. Husenali	14-11	Barisal Zilla School.
	Rowl, Saratchandra	20	Katak Town Victoria H. E. School.
	Rudra, Hiralal	17-8	Bhagyakul H. L. H. E. School.
	Rupnarain Verma	19-11	Monghyr Training Academy.
	Sadekuddin Khan	20	Bogra Zilla School.
	Saha, Abinashchandra	18	Central Collegiate School, Calcutta.
	" Jasodalal	19-10	Serajgunj Victoria High School.
1340	" Jogendranath	16-3	Kalaskati H. E. School.
	" Jogindralal	17	Nagarpur H. E. School.
	" Kalinaphar	19-7	Kustia H. E. School.
	" Nalinikanta	18-3	Ditto.
	Shahay, Gokuleswar	16	Ranchi Zilla School
	" Narsingha	17-8	Hajipur H. E. School.
	" Tribeni	17	Dumraon Raj H. E. School.
	Saharay, Rajeswar	16-11	Gopalpur A. E. Victoria H. E. School.
	Sahasrabuddhey Waman Vinayak	17-6	Niell City High School, Nagpur.
	Sahu, Dinabandhu	19-4	Katak P. M. Academy.
1350	" Saratchandra	16-5	Dacca Collegiate School.
	Samadar, Jogeschandra	18-4	Sohagdal Bell Academy.
	" Sailabala	...	Mymensingh Alex. Giri H. School.
	Samanta, Bimalananda*	16-11	Jamtara Jang Bahadur Coronation School.
	" Suryyakumar	18-5	Agunsi Dwarkanath H. E. School.
	Samuel Amaladoss	17	Baptist College, Rangoon.
	" M. J. N.	12	Wesly College, Colombo.
	Sania Prasad Varma	20-1	C. M. S. High School, Bhagalpur.
	Sanyal, Dineschandra	16-6	Jamalpur Donough H. E. School.
	" Jogindranarayan*	17-6	Nator Maharaja's High School.
1360	" Narendranath	15-11	Harinarayanpur H. E. School.
	" Praphullanath	17-4	Raja Suryya Kumar Institution, Rajbari.
	" Rakhalraj	16	Sherpur D. J. H. E. School.
	" Srischandra	20-9	Serajganj B. L. H. E. School.
	Sarkar, Asutosh	17-9	Sylhet Government High School.
	" Bhupendralal	16-2	F. C. of Scotland's Institution and Duff College.
	" Bidhubhushan	19-2	Nator Maharaja's High School.
	" Bimalananda	18-3	Birbhum Zilla School.
	" Binodbihari	17-1	Paultala H. E. School.
	" Harekrishna	19-7	Rajshahi Collegiate School.
1370	" Jaylal	19-7	Shaasadpur H. E. School.
	" Jyotishchandra*	16-9	Pabna Zilla School.
	" Mohinimohan*	16-1	Jalpaiguri Zilla School.
	" Mohitkumar*	16-6	Muragacha H. E. School.
	" Nandagopal	15-11	Faridpur Zilla School.
	" Narendranarayan	17-5	Bharenga H. E. School.
	" Narendranath	15-10	Krishnagar A. V. School.
	" Nisikanta*	19-4	Banaripara Union Institution.
	" Praphullakumar	17-11	Burdwan Municipal School.
	" Radhamadhab	16-1	Serajganj Victoria High School.
1380	" Rajendrakisore	21	Edward Institution, Mymensingh.
	" Rameschandra	18-9	Mathrun, N. C. Institution
	" Ramjiban*	17-8	Chaibassa Zilla School.
	" Ramkinkar*	16-8	Pandra H. E. School.
	" Sachinandan*	17-3	Deoghar H. E. School.
	" Sibnath	17	Sil's Free College.
	" Srischandra	20-11	Midnapore Town School.
	" Sukdeb	19-4	Burdwan Raj Collegiate School.
	" Umeschandra	19-5	Comilla Zilla School.
	" Upendranath	19-9	Naogaon H. E School.
1390	Sarkhel, Debendrachandra	18-9	Kalma Lakshmikanta H. E. School.
	Sarma, Khagendrachandra	17	Tezpur High School.
	" Lakshmanchandra	15	Ditto.
	Sarmabarkotki, Maheschandra	16-9	Nazira Aided High School.
	Sarmakhound, Dambarudhar	16-8	Sibsagar Bejbaruya H. School.
	Sayed Anwar Hossain	17-8	Calcutta Madrasa.
	Sayid Ahmad	19-5	Rampur Hat H. E. School.
	Sen, Binaybhushan	16-11	Swarnagram R. N. H. E. School.
	" Birendralal*	20-1	Chittagong Municipal H. E. School.
	" Chandrasekhar	14-3	Ditto ditto.
1400	" Dineschandra	17	Chittagong National Institution.
	" Haripada	19-5	City Collegiate School.
	" Harischandra	17-8	Chittagong Municipal H. E. School.
	" Hembala	...	Eden Female School, Dacca.
	" Hridaynath	19-1	Bahirdia High School.
	" Jogeschandra	16	Saroatali H. E. School.
	" Jogeschandra	17-1	Hindu School.
	" Kaminikumar	21	Imperial Seminary, Dacca.
	" Kiranchandra	16-6	Sonarang H. E. School.
	" Krishnaprasanna	20-1	Kalia B. M. H. E. School.
1410	" Kunjachandra	18	Darjeeling H. E. School.
	" Matilal	18-1	Tezpur High School.
	" Mohinimohan	16-1	Itna H. E. School.
	" Nagendramohan	19-11	Chittagong Municipal H. E. School.
	" Nagendrachandra	19-6	Baniyachong Public H. E. School.
	" Nutanchandra	16	Chittagong Collegiate School.
	" Panchanan	15-9	Howrah Zilla School.
	" Pratibhakumar*	18-6	Berhampur Collegiate School.
	" Pyarimohan*	16-2	Noakhali Zilla School.
	" Rajendranath	17-11	Mymensingh Zilla School.
1420	" Rameschandra	19	Brahmanbaria Annada H. E. School.
	" Sailendranath	16	Hindu School.
	" Saratchandra	17-2	Magura H. E. School.
	" Surendralal	17	Khelat Chandra Calcutta Institution.
	" Sibeschandra	15-9	Jessore Zilla School.
	" Srischandra	15-1	Basirhat H. E School.
	" Sukumar	13-4	Ukil's Institution, Dacca.
	" Sureshchandra	19-4	City Collegiate School Mymensingh Branch.
	" Suryyakumar	16	Central Collegiate School.
	" Upendrachandra	16-10	Private Student, Roll Syl. P. 4.
1430	Sen Gupta, Akshaykumar	17-11	Feni H. E. School.
	" Bagalapada	17-9	Birbhum Zilla School.
	" Basantakumar	19-9	Sonarang H. E. School.

* Passed in drawing.

	Sen Gupta Kamakhyacharan	15-11	Chittagong Municipal H. E. School.
	,, Kaushikikumar	18-7	Brajamohun Institution, Barisal.
	,, Kshirodchandra	17-9	Garia H. E. School.
	,, Mahadeb	18-2	Suri Gadadhar Institution.
	,, Pareschandra	16-1	Sylhet Government High School.
	,, Prabhatchandra	17-6	Kalia E. M. H. E. School.
	,, Pramathanath	17-1	Ditto.
1440	,, Pramathanath	19	Sil's Free College.
	,, Priyanath	14	F. C. of Scotland's Institution and Duff College.
	,, Satischandra*	13	Kisorilal Jubilee School, Dacca.
	,, Subodhchandra	14-11	Faridpur Zilla School.
	,, Surendrachandra	17-6	Nabinagar H. E. School.
	Seminajumdar, Lalitchandra	18-8	Chittagong Municipal H. E. School.
	Serajul Islam Chowdhury	17-11	Ripon Collegiate School.
	Set, Baidyanath	20	Kosab Academy.
	,, Nanilal	17-2	Andul H. C. E. School.
	Seymour, E	17-3	Diocesan Boys' High School, Rangoon.
1450	Shahidul Haque	19-10	Jamui H. E. School.
	Shaik Abdul Hakim	19-9	Bangora H. E. School.
	Shamrao Anandrao Boot	17-6	F. C. Institution, Nagpur.
	Shankar Balkrishna Palsolay	16-10	Sitabuldi E. E. E. Patwardhan H. School.
	Shanker Raojee Gokhle	19-2	F. C. Institution, Nagpur.
	Shanti Prosad*	19	T. N. Jubilee Collegiate School.
	Shashi Bhushan Prasad	17-10	Samastipur H. E. School.
	Shawkatul Islam	17-1	Albert Victoria Institution, Burdwan.
	Sheikh Syed	20	Ulubaria H. E. School.
	Sheonandan Prashad	15-2	Giridih H. E. School.
1460	Sheo Shankar Lal	18-3	Private Student Roll Pat P. 11.
	Shivagovind Prasad	17-10	Buxar H. E. School.
	Shiva Ram Prasad	17	Damraon Raj H. E. School.
	Shiva Shanker Sahay	14-10	Arrah K. J. Academy.
	Shivshaktirai Shriniwasrai Mishra.	18-1	Ratlam Central College.
	Shugunchand Bagree	16-6	Metropolitan Institution, Barabazar Branch.
	Shukh Deo Lal	19-1	Asansol H. E. School.
	Shukur Muhammad Mea	18-1	Dubalhati Haranath H. E. School.
	Sham Behari Sarmah	16-6	T. K. Ghosh's Academy.
	Shyamdeo Narayan	19-3	Hatwa Eden School.
1470	Sibasebak Ram	17-11	Purnea Zilla School.
	Sil, Ganeschandra	15-10	Bangabasi Collegiate School.
	,, Kailaschandra	18-3	Kisorganj H. E. School.
	,, Paschanan*	17-3	Chinsura United F. C. Institution.
	,, Parbatikaran*	18-8	Kartikpur H. E. School.
	,, Radharaman	15-4	Hugli Collegiate School.
	,, Sarayubala		Bethune Collegiate School.
	Sinha, Anukulchandra*	16-3	Khelat Chandra Calcutta Institution.
	,, Aswinikumar	19-3	Dinajpur Zilla School.
	,, Bankimchandra	18-6	Calcutta Academy.
1480	,, Girijaprasad	19	Monghyr Training Academy.
	,, Haridas	14-9	New Indian School.
	,, Haripada	17-7	Badia H. E. School.
	,, Jatindramohan	14-6	Tangail Bindubasini H. E. School.
	,, Jitendranath	15-11	Bishop's College School.
	,, Jnanendranath	15	Aryya Mission Institution.
	,, Lalitmohan	17-9	Hare School.
	,, Loknath*	16-4	Banka H. C. E. School.
	,, Madanmohan	19-4	Daighar H. E. School.
	,, Manindranath*	18-6	Nawabganj Harimohun Institution.
1490	,, Nirmanarayan	18-4	Rajshahi Collegiate School.
	,, Ram Badai	18-11	B. N. Collegiate School, Bankipur.
	,, Ramkamal	20-10	Murapara Victoria H. E. School.
	,, Rammohan	19-9	Midnapur Collegiate School.
	,, Ramnandan	17-6	Darbhanga Northbrook School.
	Sinha Sudhirkumar	15-5	Metropolitan Institution.
	,, Tulsidas	17	Hindu School.
	,, Upendranath	16-6	Saikhira P. N. H. E. School.
	Sital Prasad	16-10	Sehore High School.
	Sitai Prosad Varma	20-8	T. K. Ghosh's Academy.
1500	Sivnandan Prasad	16-10	T. N. Jubilee Collegiate School.
	S. Kathirippilly	23	Jaffna College School.
	S. K. Valoopillay	17-4	Point Pedro Boys' High School.
	S. M. Abdul Ahad	19-10	Sandwip Cargill H. E. School.
	Som, Haridayal	19	Subarnakhali S. M. H. E. School.
	,, Lalmohan	16	General Assembly's Institution.
	,, Pareslal	13-11	Mawlaibazar H. School, Sylhet.
	Sona Meah	21-4	Comilla Zilla School.
	Speirs, Margaret		Rangoon Convent School.
	Sreeprasad Dev	15-10	T. N. Jubilee Collegiate School.
1510	Sridhar Ramkrishna Mangroolkar.	16-10	F. C. Institution, Nagpur.
	S. Sivasupramanian	15-9	Jabbra Central Collegiate School.
	Stephens, Gertrude		Methodist Girl's School, Rangoon.
	Sultanuddin Ahmad	15	Shahapur H. E. School.
	Sunderlal Pachkowri	14-7	Kampter High School.
	Sur, Bipinbihari*	18-4	Naihati Mahendra School.
	Surajkumar Lall	23-11	Arrah Zilla School.
	Swarnakar, Dharmeswar	15-11	Sibsagar Govt. H. School.
	Syam, Kirtinarayan	19	Sonamganj Jubilee High School.
	Syed Asghar Hossain	16-5	T. N. Jubilee Collegiate School.
1520	Syed Feda Hossain	16-7	B. N. Collegiate School, Bankipur.
	Syed Hameeruddin Ahmad*	16-9	Behar H. C. E. School.
	Syed Muhammad	13	Patna Collegiate School.
	Syed Nizamudnin Ahmad	16-6	Bankipur Anglo-Sanskrit School.
	Syeduddin Ahmad	19-4	Bogra Zilla School.
	Syed Wajid Ali	19-11	Kasba H. E. School.
	Syed Zahurul Hasan	17	Victoria Memorial H. E. School, Siwan.
	Talukdar, Jitendra Nath	18-3	Kangamati H. E. School.
	Tamber, R. R.	16-9	Jaffna Central Collegiate School.
	Tejratna Sthapita	20-7	Darbar School Nepal.
1530	Tewari, Kailaspati	18-3	Mozufferpur Zilla School.
	,, Sachchidananda	18-8	Jamui H. E. School.
	Tha E.	21-6	Baptist College, Rangoon.
	Thakur, Bansidhar Girindranath	15-3	Hetamour H. E. school.
		20-3	Puthia P. N. H. E. School.
	Tha Lan	20	Rangoon Collegiate School.
	Thampipullai Ponniah	19-3	Jaffna Central Collegiate School.
	T. Kandiah	14-3	Jaffna Central Collegiate School.
	T. Nayamuttu	17-8	Jaffna College School.
	Tripathi, Homchandra	15-5	Maurbhanj H. E. School.
1540	Trivedi, Dhanukdhariprasad	21-4	Muzaffarpur Mukerjee's Seminary.
	T. Subbusamy Raja Radhakrishna Raja.	19	Jaffna Hindu School.
	Tunga, Dharanidhar	19-2	Pingla K. K. Institution.
	Upadhyay, Ayodhyaprasad	20-11	Buxar H. E. School.
	U. Sutodin Roy	16	Shillong Government H. School.
	Vaidya Ramji Ramchandra	21	Nagli City High School, Nagpur.
	Vasant Rang Rao Khisty	20-9	F. C. Institution, Nagpur.
	Velloz, Maria Lilia		St. Joseph's Convent H. School.
	Vidwans Narayan Waman	15	Nagli City High School, Nagpur.
	Vidyadhar Damodhar Chitale	21	Candian Mission Coll. School, Indore.
1550	Vinayek Narayan Kher	19-1	F. C. Institution, Nagpur.
	Vishweshwar Nath	14-11	Chapra Zilla School.
	V. S. Saba Ratnam	17-4	Jaffna Coll. School.
	Yadeo Janardan Bhalerao	18-4	Sitabaldi E. E. E. Patwardhan H. School.
	Yadunath Sahay	21-11	Begusarai L. P. H. E. School.
	Ye E.	20-6	Baptist College, Rangoon.
	Zahiruddin Ahmed	18	Jorhat Government High School.
1557	Zemin, R. J.	16-1	Doveton College.

* Passed in Drawing.

K. C. BANURJI,
Registrar, Calcutta University.

SENATE HOUSE,
The 21st May 1905.

NOTICE.

COMMERCIAL CLASSES IN THE PRESIDENCY COLLEGE.

DAY classes in the following subjects will be opened in the College on the 27th June 1905 :—

1. English (modern), especially English correspondence, including Commercial correspondence, letter-drafting and précis-writing.
2. Arithmetic, including Commercial and Mental Arithmetic.
3. Book-keeping, Short-hand and Type-writing.
4. Commercial History and Geography.
5. Bengali, especially Commercial correspondence, letter-writing, précis-writing and translation.

All will be admitted to the Day classes who have passed the School Final or the Entrance Examination or who are able to satisfy the Education Department by passing a simple preliminary test examination.

There is no age limit.

The fee for the Day classes is Rs. 3 a month.

P. K. RAY,

Offg. Principal, Presidency College.

PRESIDENCY COLLEGE, CALCUTTA, *the 8th March 1905.*

NOTICE.

EVENING classes in the following subjects will be opened in the College on the 27th June next:—

1. Banking and Currency.
2. Commercial and Industrial Law.
3. Book-keeping.
4. Short-hand.
5. Type-writing.

Candidates who have attended the lectures in the day course will be eligible for admission to the Evening course, but others will be admitted if they satisfy the Education Department by passing a simple preliminary test examination.

There is no age limit.

The fee is Rs. 3 for each series of fifteen lectures in the evening course on—

1. Banking and Currency; and
2. Commercial and Industrial Law;

and Rs. 10 for each course of lectures on—

1. Book-keeping.
2. Short-hand; and
3. Type-writing.

P. K. RAY,

Offg. Principal, Presy. College.

PRESY. COLLEGE, CALCUTTA; *the 15th May 1905.*

BIHAR SCHOOL OF ENGINEERING.

Prospectus for Admission.

THIS School is under the management of the Principal of the Patna College, assisted by a Board of Visitors. It owes its origin to a fund raised by residents of Bihar to commemorate the visit to India of His Royal Highness the Prince of Wales. The object of the fund was the promotion of technical instruction in Bihar. The School was formally opened on the 11th July 1896 by His Honour the Lieutenant-Governor of Bengal.

2. The number of students admitted to the first-year class of each year will be limited to 60, of whom only 15 can be other than Biharis by race (viz., natives of the United Provinces, Central Provinces or Bengalis); but should the number of suitable applicants who are Biharis by race be insufficient to fill up the 45 vacancies, then the vacancies thus occurring can be given to those applicants who are natives of the United Provinces, Central Provinces, or Bengalis domiciled in Bihar or non-domiciled Bengalis.

As far as accommodation is available, students who have passed the final 4th class examination will be admitted to the second-year class, provided they are not over 21 years of age, preference, again, being given to Biharis and domiciled Bengalis.

3. The School, as at present constituted, is chiefly engaged in training students for appointment as Sub-Overseers and Overseers.

The curriculum includes—

(1) A sound study of Elementary Mathematics.
(2) Careful training in Survey work.
(3) Drawing, both Free-hand and Engineering.
(4) Elements of road-making and the construction of simple buildings.
(5) Workshop practice, with hand tools and with machinery.

Students are prepared for the Overseer certificate of the Public Works Department. The necessary additional buildings have now been completed; and Government has agreed to reserve one appointment annually for a qualified student from this School, who must be a Bihari by race.

4. The next session will commence on 3rd July 1905.

5. In the Overseer Department, which corresponds to the Apprentice Department of the Shibpur College, the monthly fee is Re. 1-8, except for non-domiciled Bengalis, who shall pay Rs. 3. All scholarship-holders, however, receive free tuition. Government scholarships of the value of Rs. 7 a month, tenable for one year, are awarded each year on the results of the annual examinations, *eight* being tenable in the second-year class, *six* in the third-year class, and *six* in the fourth-year class. Of the scholarships attached to the School, 75 per cent. of them are to be reserved for those students who are Biharis by race. The teaching is in English.

6. Candidates for admission to the Overseer Department must be under 20 years of age, and must have passed one of the tests mentioned below:—

(1) The Entrance examination of an Indian University in English and Mathematics.
(2) Standard VII of the Code of European Schools.
(3) Students who have not passed either of these tests, and who are otherwise eligible, will have to pass an examination in English and Mathematics (of about the same standard as the Entrance examination of the Calcutta University in these subjects) to be held by the Principal of the Patna College on the 5th and 6th July, respectively (from 6 A.M. to 9 A.M. each day).

7. Candidates for admission must apply to the Principal not later than the 30th June. Their application must give the following particulars:—

(*a*) Name, address, and occupation of father or guardian.
(*b*) Race and religion, and *evidence to show that he is either a Bihari or a native of the United Provinces or Central Provinces or a domiciled Bengali or a non-domiciled Bengali.*
(*c*) A certificate of good moral character.
(*d*) An attested certificate of age (showing that he is under 20 years of age).
(*e*) A medical certificate showing him to be fit for employment in the public service.
(*f*) A certificate of having passed either of the first two of the three tests mentioned above, failing which the application will be kept pending till a certificate showing that the candidate has passed the third test is given to the Principal.

8. There is also an Amin class, admission to which may be obtained by students who do not know English. In the Amin class the course of study is for one year, and the monthly fee is Re. 1. An Amin student is taught Elementary Surveying with a corresponding amount of Mathematics and of Geometrical Drawing. He will not be admitted to the Workshop. A student in the first-year class of the Overseer Department who fails to pass the examination for promotion to the second-year class, but who has shown an adequate knowledge of Elementary Surveying and the other subjects taught in the Amin class may, at his option, leave the School with an Amin certificate.

Candidates for Amin class who have not passed the Middle English or Middle Vernacular examination will be examined at the School on the 7th July; candidates failing at this examination will not be admitted.

9. Except in very special cases, a student will not be admitted to the Amin class for the session that commences from 3rd July 1905, unless application for admission is made before 30th June 1905.

10. Every candidate for admission to the School must bring a certificate of good character from the Head of the institution from which he has come.

11. All candidates for admission to the School should present themselves personally at the School on the 3rd July.

BANKIPORE,
The 14th February 1905.

H. R. JAMES,
Offg. Principal, Patna College.

NOTE.—There is a hostel in connection with the School which will be opened in July 1905.

Yearly Examination of Candidates for fourth grade of Accountants.

THE yearly examination of candidates for fourth grade of Accountants, Public Works Department, will be held at the Civil Engineering College, Sibpur, on Monday and Tuesday, the 3rd and 4th July 1905, at 10-30 A.M., both days :—

SUBJECTS.	Full marks.	Minimum pass marks.
Writing (neatness, clearness, and rapidity)	100	50
Dictation (spelling, punctuation, etc.)	100	50
Arithmetic (the whole)	240	160
Mensuration (*a*) the whole	60	30
Book-keeping (*b*) mercantile	100	50
Total	600	

Minimum required in all papers collectively, 400.

(*a*) Todhunter's Mensuration for Beginners.
(*b*) "Book-keeping," by Ball and Hamilton.
"Book-keeping," by double and single entry, by W. Inglis (Chambers' Educational Course).

1. The examination is held annually at the Civil Engineering College, Sibpur, on the 1st Monday in July. The examination will be conducted either at the College, or by an Examiner, Public Works Accounts (including Railway and Telegraph), in Bengal, Assam, and Burma only. The examination will be *ipso facto* vitiated, if it be not held (begun and completed) on the dates fixed; but the officer who will conduct the examination may make his own arrangements, in regard to the *place* and *hour* of examination, with the candidates.

Candidates will not be examined in any of the Calcutta offices.

A candidate already in permanent Government employ* may be allowed to compete in the examination, even if he is more than 25 years of age, and may be appointed to an accountantship if he passes it; but if he is not already in pensionable service, he will be eligible only for appointment to the non-pensionable establishment on State Railways.

* This term includes employment under Local Boards and foreign bodies, if such is pensionable by the British Government.

2. The candidate should apply to an Examiner of Public Works Accounts, not later than 30 days previous to the date fixed for the examination, and obtain his consent to conduct the examination, if examination at the College is not convenient. The application must bear the address of the candidate, must be accompanied by a fee of Rs. 10 and the following certificates, and must be forwarded by him, not direct to the Principal, but through the Examiner

Certificates may be submitted in original, or true copies attested by an officer of the Engineer or Accounts Branch, but none will be returned :—

(1) Certificate of good character signed by applicant's immediate official superior, or by the instructor under whom he has been educated, or by some other superior, under whom he may have been brought up or employed, or to whom he may be well known. (This certificate must have special reference to the two years immediately preceding the application.)

(2) Certificate of age (baptismal or of birth) not required, if the candidate is already in permanent Government employ.

(3) Certificate that the application is in the candidate's handwriting.

NOTE.—A candidate already in Government service should, in like manner, submit his application, through his immediate official superior, to an Examiner of Accounts qualified to hold the particular examination, and should state whether he desires to be examined at the office of the Examiner of Accounts concerned or at the College.

It will rest with the Examiner of Accounts, to whom the candidate submits his application, to decide, on a consideration of the certificates submitted, whether the candidate should be allowed to appear for the examination or whether his application should be rejected. The Examiner of Accounts will then forward to the Principal, for registration, the names of the accepted candidates. The names of these candidates should be entered in a statement showing their ages and their addresses, and also showing where each candidate is to be examined, whether at the College or at the office of the Examiner of Accounts. This statement, together with the fees, should be transmitted to the Principal not later than 15 days after the dates fixed in paragraph 2 for the submission of applications of candidates.

3. Examination papers that are issued for examination need not be returned.

4. Each examination is complete in itself. A candidate who has failed in an examination, and presents himself for examination on a subsequent occasion, must undergo the full examination and furnish fresh fee and certificates.

5. If from any cause a candidate fails to appear for the examination, the fee paid will not be refunded.

6. Passed candidates should apply, not to the Principal of the College, nor to the Accountant-General, Public Works Department, but direct to the Examiner of Public Works Accounts, in the province or railway under whom they may desire to be employed.

7. It must be distinctly understood that the passing of this examination does not give any claim to an appointment, and that in making appointments preference will be given to qualified persons who are already employed in the Department.

8. The Civil Engineering College acts solely as an examination body in reference to admission to the fourth grade of Accountants, Public Works Department.

9. Candidates for the fourth grade Accountantship examination, who are not Government servants and over 25 years of age, are allowed to appear at the examination, at the Sibpur College centre only, but, even if successful, they are debarred from employment in the service of Government, and their names will be excluded from the list of passed candidates which is furnished to the Accountant-General, Public Works Department.

10. Candidates over 25 years of age should apply in writing to the Principal of the Civil Engineering College, not later than 30 days previous to the examination; the application to be accompanied by the fee of Rs. 10.

SIBPUR,
The 5th May 1905.

A. MACDONELL,
Offg. Principal, Civil Engineering College.

NOTIFICATIONS OF THE BOARD OF REVENUE.

No. 3122B.

NOTICE is hereby given that the Sixth Sale of Opium, the Provision of 1902-03, will be held at the Government Opium Sale-room, No. 2 Bankshall Street, on Tuesday, the 6th June 1905, at 11 A.M., and will comprise 4,000 chests, viz.—

		Chests.
Opium manufactured at the Patna Factory, consisting of	...	2,000
Ditto at the Ghazipur Factory, consisting of	...	2,000
Total	...	4,000

2nd.—The general conditions of the sale now advertised will be the same as usual. They may be ascertained by reference to the notification issued on the 22nd November 1904, and published in the *Government* and *Exchange Gazettes*, or on personal application at the Office of the Board of Revenue.

3rd.—The latest dates for deposit and clearance will be the 13th and 21st June 1905, respectively, that is to say, no Bank of Bengal Receipts, Government Promissory Notes, or other public securities that may be tendered for deposit in redemption of Promissory Notes given by purchasers in the sale-room will be received after 3-30 P.M. of Tuesday, the 13th June 1905, and no Bank of Bengal Receipts in full payment of lots will be accepted after 3-30 P.M. of Wednesday, the 21st June 1905.

4th.—In addition to the quantity above advertised for sale, the following quantities more or less, of the Opium manufactured at the Patna and Ghazipur Factories will be brought to sale between the sale now advertised and December next on or about the dates specified below. The Board of Revenue, however, reserve to themselves the right of altering these dates should circumstances render it expedient to do so:—

DATES.			Manufactured at the Patna Factory; about chests.	Manufactured at the Ghazipur Factory; about chests.	Total; about chests.
On or about Tuesday,	4th July	1905...	2,000	2,000	4,000
On or about Tuesday,	1st August	,, ...	2,000	2,000	4,000
On or about Tuesday,	5th September	,, ...	2,000	2,000	4,000
On or about Tuesday,	26th September	,, ...	2,000	2,000	4,000
On or about Wednesday,	1st November	,, ...	2,000	2,000	4,000
On or about Tuesday,	5th December	,, ...	2,000	2,000	4,000
	Total	...	12,000	12,000	24,000

By order of the Board of Revenue, L. P.,
H. F. SAMMAN, *Offg. Secretary.*

BOARD OF REVENUE, L. P., CALCUTTA, *the 1st May 1905.*

Statement showing the quantity of salt (private property) in bonded warehouses and afloat on the river Hooghly on the 15th day of May 1905, and transactions during the half month from the 1st to the 15th May 1905.

Description of Salt.	In Bonded Warehouses in Calcutta.				Quantity afloat.	Grand Total.	Transactions during half month from the 1st to the 15th May 1905, inclusive.			
	In private golas.	In Sulkea Government golas.	In Kidderpore Dock Government golas.	Total.			Quantity on which duty has been paid.	Manifested quantity arrived in the port of Calcutta.	Deliveries from shipboard for consumption and for inland bonded warehouses.	Deliveries from bonded warehouses for consumption and for inland bonded warehouses.
		Mds.	Mds.	Mds.	Mds.	Mds.	Mds.	Mds.	Mds.	Mds.
United Kingdom—										
Liverpool and other Panga salt.	.....	2,11,857	4,29,187	6,41,044	1,26,152	7,67,196	1,81,286	2,14,098	67,800	2,39,941
Other European countries—										
Hamburg rock salt ...	.....	2,930	.....	2,930	.....	2,930	.....	..	.....	.....
Ditto salt	.....	3,03,489	38,560	3,32,049	42,875	3,74,924	53,605	75,480	.....	44,225
Spanish salt	.....	91,228	6,550	97,778	.....	97,778	12,440	.....	.....	9,100
Port Said salt	.....	.....	.....	.....	.....	.....	5,820	.....	.....	9,140
Aden and Red Sea—										
Aden salt	.....	23,092	.....	23,092	.....	23,092	29,740	.....	...	44 240
Salif salt	.....	1,73,398	.....	1,73,398	1,12,234	2,85,632	1,18,486	1,40,194	6,000	99,745
Do. rock salt	.....	19,390	.....	19,390	.....	19,390	250	.....	.....	750
Rawayah salt	.....	2,83,905	.....	2,83,905	.....	2,83,905	6,200	.....	.....	7,070
Muscat and Persian Gulf—										
Muscat, Lingah and Hanjam salt.	.....	55,044	.....	55,044	.....	55,044	400	.....	.....	400
Ditto ditto rock salt	.....	2,444	.....	2,444	.....	2,444	.....	.....	.....	..
British India—										
Bombay salt	.....	66,151	.....	66,151	.....	66,151	20,150*	.....	.....	25,105
Madras salt	.....	.....	.....	.....	.....	.....	.....	.....	.....	.....
Coconada salt	.....	.....	.....	.....	.....	.....	.....	.....	.....	.....
Vizagapatam salt ...	.....	.....	.....	.....	.....	.....	.....	.....	.....	.....
Other places—										
Madagascar salt	.....	.....	.....	.....	.....	.....	.....	.....	.....	.....
Total ...	.....*	12,37,328	4,64,297	16,98,125	2,81,261	19,79,386	*4,28,436	4,29,749	73,800	4,67,776

	Quantity in transit. Mds.
Liverpool and other Pangah salt	4,700
Salif	10,440

Written off during the half month—

	Mds.
Wastage in private golas	Nil
Ditto in Sulkea golas	2,509
Ditto in Kidderpore Dock golas ...	5,677
Abandoned and destroyed	138

* This quantity includes 20,010 maunds 20 seers Bombay karkach salt on which duty was paid at Bombay.

By order of the Board of Revenue, L. P.,

B. FOLEY,
Offg. Collector of Customs.

CALCUTTA CUSTOM HOUSE, *the 23rd May 1905.*

ELECTION OF MUNICIPAL COMMISSIONERS.

NOTIFICATION.

IT is hereby notified for general information that at a bye-election held in Ward No. IV of the Bhagalpur Municipality on the 29th April 1905, Babu Harandra Krishna Bagchi, B.L., was duly elected a Municipal Commissioner in place of Maulvi Abdul Waheed Khan, resigned.

D. J. MACPHERSON, *Commissioner.*

COMMR.'S OFFICE, BHAGALPUR, *the 16th May 1905.*

NOTIFICATION.

IT is hereby notified for general information that at a bye-election held in Ward No. IV of the Purnea Municipality on the 29th April 1905, Mir Abul Hashim was duly elected to be a Municipal Commissioner in place of Babu Raghubans Sahai, resigned.

D. J. MACPHERSON, *Commissioner.*

COMMR.'S OFFICE, BHAGALPUR, *the 17th May 1905.*

NOTIFICATION.

It is hereby notified for general information that the 24th June 1905 has been fixed for holding a bye-election for the election of a Commissioner for Ward No. II of the Kalna Municipality in the place of Babu Prakash Chandra Mukerjee, resigned.

N. L. BAGCHI, for *Commissioner.*

COMMR.'S OFFICE, BURDWAN DIVISION, CHINSURA, *the 17th May 1905.*

NOTIFICATION.

It is hereby notified for general information that the 2nd September 1905 has been fixed for holding a bye-election for the election of a Commissioner for Ward No. I of the Kotrung Municipality in the place of Babu Harish Chandra Mondal, deceased.

N. L. BAGCHI, for *Commissioner.*

COMMR.'S OFFICE, BURDWAN DIVISION, CHINSURA, *the 17th May 1905.*

NOTIFICATION.

It is hereby notified for general information that at a bye-election held on Saturday, the 29th April 1905, in Ward No. III of the Joynagore Municipality in the district of the 24-Parganas, Babu Girija Bhusan Mitra, B A., was duly elected to be a Commissioner for that Ward in the place of Babu Jogendra Nath Mitter, who has been removed from the Municipal Board under section 20 (1)(*c*) of the Bengal Municipal Act as amended.

F. W. DUKE, *Offg. Commissioner.*

COMMR.'S OFFICE, PRESIDENCY DIVISION, CALCUTTA, *the 20th May 1905.*

NOTIFICATION.

It is hereby notified for general information that a bye-election will be held in Ward C of the Monghyr Municipality on Saturday, the 29th July 1905, for the election of a Municipal Commissioner in place of Mr. V. A. Meerza, resigned.

D. J. MACPHERSON, *Commissioner.*

COMMR.'S OFFICE, BHAGALPUR, *the 22nd May 1905.*

NOTIFICATION.

It is hereby notified for general information that Babu Balbhadra Prasad Singh is appointed to be a member of the Bhubua Dispensary Committee, *vice* Babu Guder Singh, deceased, in the district of Shahabad.

C. R. MARRIOTT, *Addl. Commissioner.*

PATNA COMMR.'S OFFICE, BANKIPORE, *the 20th May 1905.*

NOTIFICATION.

It is hereby notified for general information that, under rule 21 (*b*) of the Manual of Rules for the management of Charitable Hospitals and Dispensaries in Bengal, the following gentlemen are appointed to be members of the Committee for management of the Charitable Dispensary at Telikhali, in the district of Backergunge :-

1. Babu Lalit Kumar Gupta, Naib of Nawab's Estate.
2. ,, Kailash Chandra Chakraverty, Naib of Babu G. C. Bhattacharjee.
3. ,, Dwarka Nath Roy, Tehsilder in the Nawab's Estate.
4. ,, Iswar Chundra Roy, K. M. Tehsilder, Telikhali.
5. ,, Chandra Nath Banerjee.
6. ,, Jogesh Chandra Gupta.
7. Tehsilder of C. W. Estate, Balipara Circle (*ex-officio*).

T. INGLIS, *Commissioner.*

COMMR.'S OFFICE, DACCA, *the 17th May 1905.*

NOTIFICATION.

It is notified for general information that, under Rule 21A of the rules published in Government Notification No. 3404Med., dated the 1st December 1904, the term of office of the present members of the Committee of management of the Purbasthali Dispensary having expired, the following gentlemen are appointed as members of the new Committee :—

1. The Subdivisional Officer of Kalna ... ... } *Ex-officio.*
2. The Civil Surgeon of Burdwan ... ... } *Ex-officio.*
3. The Sub-Registrar of Purbasthali ... ... } *Ex-officio.*
4. Babu Taraprosanna Sarkar, Zamindar, Ekdala.
5. „ Aswini Kumar Roy, B.A., Head Master, H. E. School, Purbasthali.
6. „ Monmatha Nath Roy, Zamindar, Chupi.
7. „ Mathuranath Sanyal, B.L., Pleader, Mertola.
8. „ Umakanta Roy, Zamindar, Purbasthali.
9. Mahamohopadhya Krisna Nath Nayapanchanon, Purbasthali.
10. Babu Ram Hari De, Merchant, Purbasthali.
11. The Sub-Inspector of Police, Purbasthali, *ex officio.*

E. H WALSH,
Offg. Commissioner.

BURDWAN COMMR.'S OFFICE, CHINSURA, *the 20th May 1905.*

NOTIFICATION.

It is hereby notified for general information that under rule 21 (*b*) of the Dispensary Manual, the following gentlemen have been appointed members of the Committee for the management of the Charitable Dispensary at Baduria, in the district of the 24-Parganas :—

1. The Civil Surgeon, 24-Parganas ... } *Ex-officio.*
2. The Chairman of the Baduria Municipality ... } *Ex-officio.*
3. The Vice-Chairman of the Baduria Municipality } *Ex-officio.*
4. Babu Jatindra Mohan Bose.
5. „ Mohendra Nath Chatterjee.
6. „ Saroda Prosad Mukerjee.
7. „ Benoy Krishna Mitra.
8. „ Kali Das Bhattacharjya.
9. „ Bipin Behari Choudhury, B.A., B.L.

F. W. DUKE, *Offg. Commissioner.*

COMMR.'S OFFICE, PRESY. DIVN., CALCUTTA, *the 22nd May 1905.*

NOTIFICATION.

It is hereby notified for general information that, under rule 21 (*b*) of the Manual of Rules for the management of Charitable Hospitals and Dispensaries in Bengal, the following gentlemen are appointed to be members of the Committee for the management of the Charitable Dispensary at Srirampur, in the district of Backergunge :—

1. Babu Upendra Chandra Roy, Manager, Babu A. C. Roy's Estate.
2. „ Chinta Haran Ghosh, Naib in charge of pargana Srirampur, Babu A. C Roy's Estate.
3. „ Uma Charan Chakraverty, Head Muharrir of Srirampur pargana, Babu A. C. Roy's Estate.
4. „ Broja Nath Mukhapadhya.
5. Munshi Noor Bakhsha Bepari.

T. INGLIS, *Commissioner.*

COMMR.'S OFFICE, DACCA, *the 17th May 1905.*

The Calcutta Gazette.

WEDNESDAY, MAY 24, 1905.

PART IA.

Orders and Notifications by the Government of India, &c.

[*Reprinted from the "Gazette of India."*]

The following order, issued by the Government of India in the Home Department, is republished for general information.

R. W. CARLYLE,
Offg. Chief Secy. to the Govt. of Bengal.

NOTIFICATION.

SANITARY.

Simla, the 13th May 1905.

No. 792.—The services of Lieutenant W. C. Ross, M.B., I.M.S., are placed temporarily at the disposal of the Government of Bengal.

EDUCATION.

Simla, the 17th May 1905.

No. 308.—Mr. N. L. Hallward, M.A., of the Indian Educational Service, is appointed to be Director of Public Instruction in Assam in succession to Dr. W. Booth, M.A., D.SC.

No. 309.—The services of Dr. W. Booth, M.A., D.SC., Director of Public Instruction in Assam, are placed at the disposal of the Government of Bengal.

M. HAMMICK,
Offg. Secy. to the Govt. of India.

The following order, issued by the Government of India in the Department of Commerce and Industry, is republished for general information.

R. W. CARLYLE,
Offg. Chief Secy. to the Govt. of Bengal.

NOTIFICATION.

CUSTOMS.

INDIAN TEA CESS ACT.

Simla, the 19th May 1905.

No 1758C.—In exercise of the power conferred by section 4, sub-section (3) of the Indian Tea Cess Act, 1903 (IX of 1903), the Governor-General in Council is pleased, on

the recommendation of the Indian Tea Association, to appoint Mr. T. McMorran, of the firm of Messrs. Duncan Brothers and Company, to fill the vacancy on the Tea Cess Committee caused by the resignation of Mr. A. Tocher.

W. L. HARVEY,
Secy. to the Govt. of India.

The following orders, issued by the Government of India, in the Military Department, are republished for general information.

R. W. CARLYLE,
Offg. Chief Secy. to the Govt. of Bengal.

Simla, the 19th May 1905.

INDIAN MEDICAL SERVICE.

Captains to be Majors.

Dated 30th January 1905.

BENGAL ESTABLISHMENT.

Bernard Robert Chatterton, M D., F.R.C.S I.

VOLUNTEER CORPS.

APPOINTMENTS, PROMOTIONS AND RESIGNATIONS.

Northern Bengal Mounted Rifles.

No. 444.—Frank Horace McNaught, Gentleman, to be Second-Lieutenant, to complete the establishment; with effect from the 1st April 1905.

H. B. B. WATKIS, *Colonel,*
Offg. Secy. to the Govt. of India.

The Calcutta Gazette.

WEDNESDAY, MAY 24, 1905.

PART IB.

ORDERS BY THE LIEUT.-GOVERNOR OF BENGAL.

MUNICIPAL AND LOCAL.

NOTIFICATIONS.

No. 587T.M.—The 16th May 1905.—It is hereby notified that the members of the Barasat Local Board, in the district of 24-Parganas, having at a meeting, under section 25 of the Bengal Local Self-Government Act, III of 1885, requested the Lieutenant-Governor to appoint a Chairman, the Lieutenant-Governor is pleased under the said section to appoint the Subdivisional Officer of Barasat to be the Chairman of that Local Board.

24-Parganas.

No. 589T.M.—The 16th May 1905.—It is hereby notified that the Lieutenant-Governor is pleased to approve the election by the members of the Sadar Local Board, in the district of 24-Parganas, under section 25 of the Bengal Local Self-Government Act, III of 1885, of Mr. R. D. Mehta, C.I.E., to be their Chairman.

24-Parganas.

No. 591T.M.—The 16th May 1905.—It is hereby notified that the Lieutenant-Governor is pleased to approve the election by the members of the Barrackpur Local Board, in the district of 24-Parganas, under section 25 of the Bengal Local Self-Government Act, III of 1885, of Mr. L. Birley, to be their Chairman.

24-Parganas.

No. 593T.M.—The 16th May 1905.—It is hereby notified that the Lieutenant-Governor is pleased to approve the election by the members of the Basirhat Local Board, in the district of 24-Parganas, under section 25 of the Bengal Local Self-Government Act, III of 1885, of Khan Bahadur Maulavi Golam Quassim to be their Chairman.

24-Parganas.

No. 634T.M.—The 18th May 1905.—It is hereby notified that, under section 7 of the Bengal Local Self-Government Act, III of 1885, the following gentlemen have been elected to be members of the District Board of 24-Parganas:—

Local Boards by which elected.	Names of Members.
Alipore ...	Babu Nando Lal Sarkar. „ Purna Chandra Mittra. „ Sidheswar Ray Chowdhary.
Barrackpore ...	Babu Bejoin Behary Banerjee. Munshi Basiruddin.
Barasat ...	Babu Banikunto Mukerjee. „ Trailakhya Nath Halder.
Basirhat ...	Babu Tarak Das Banerjee. „ Harish Chandra Mallik.
Diamond Harbour ...	Babu Upendra Nath Bose. Pandit Rakhal Chandra Tewari Nayaratna. Babu Sarada Prosad Dutta.

The following gentlemen are appointed under section 7 of the Act to be members of the Board:—

The Subdivisional Officer, Barrackpore ...
The Subdivisional Officer, Diamond Harbour ...
The Subdivisional Officer, Barasat ... } *Ex-officio.*
The Subdivisional Officer, Basirhat ...
The Deputy Inspector of Schools, 24-Parganas ...

Rai Money Lall Banerjee Bahadur.	Mr R. D. Mehta, C.I.E.
Maharaja Kumar Reshee Case Law	Revd. W. R. LeQuesne.
Raja Peary Mohun Mukerjee, C.S.I.	Raja Binaya Krishna Deb Bahadur.

Khan Bahadur Maulvi Gholam Quassim

No. 636T M.—The 18th May 1905.—It is hereby notified that, under section 11 of the Bengal Local Self-Government Act, III of 1885, the Lieutenant-Governor is pleased to appoint the following gentleman to be members of the Sadar Local Board, in the district of Burdwan:—

Burdwan.

The Deputy Inspector of Schools, Burdwan, *ex-officio.*

Choudhuri Afzal Rabbi.	Babu Raghu Deb Chatterjee.
Syed Abdul Mowla.	,, Raja Gopal Basu.

No. 643T.M.—The 19th May 1905.—It is hereby notified that, under section 59 of the Bengal Municipal Act, III of 1884, the Lieutenant-Governor approves the election by the Commissioners of the Faridpur Municipality, in the district of Faridpur, of Babu Ananda Chandra Chatterjee, to be their Chairman, during the absence, on leave, of Maulvi Asadazzaman.

Faridpur.

No. 645T M.—The 19th May 1905.—It is hereby notified that, under section 27 of the Bengal Municipal Act, III of 1884, the Lieutenant-Governor is pleased to appoint Babu Jatindra Nath Palit to be a Commissioner of the Bogra Municipality, in the district of Bogra, *vice* Babu Mrityunjoy Bhattacharjee.

Bogra.

No. 647T.M.—The 19th May 1905.—It is hereby notified that, under section 27 of the Bengal Municipal Act, III of 1884, the Lieutenant-Governor is pleased to appoint Babu Gosto Behari Kunda to be a Commissioner of the Giridih Municipality, in the district of Hazaribagh, *vice* Babu Tincori Bose, resigned.

Hazaribagh.

No. 664T.M.—The 19th May 1905.—In exercise of the power conferred on him by section 188 of the Bengal Local Self-Government Act, III of 1885, the Lieutenant-Governor is pleased to substitute the following rule for rule 3 of the Rules made under clauses (*g*), (*l*) and (*m*) of the aforesaid section of the Act and published under Notification No. 3634L.S.-G., dated the 20th December 1901, at pages 293-305 of Part IB of the *Calcutta Gazette* of the 25th idem:—

"*Rule 3.*—Certificates given by the Chief Engineer under rule 2, whether to candidates for first employment or on renewal, shall be divided into three classes according to the qualifications of the holders. In deciding the class of certificate which may be granted, the Chief Engineer shall be guided, *first*, by the nature of the original training of the applicant and of the professional tests passed; *secondly*, by the experience which the applicant has subsequently gained and by the class of work which he has carried out; and, *thirdly*, by such information as may be available to show the administrative capacity of the applicant and his power to carry through works of an important nature."

No. 668T.M.—The 20th May 1905.—The Hon'ble Mr. R. T. Greer, C.S.I., Chairman of the Corporation of Calcutta, is allowed furlough for one month under article 311 of the Civil Service Regulations with effect from the afternoon of the 25th April 1905.

Calcutta.

No. 670T.M.—The 20th May 1905.—Under section 35 (3) of the Calcutta Municipal Act, III of 1899, the Lieutenant-Governor appoints Mr. O. F. Payne, I.C.S., Deputy Chairman of the Corporation of Calcutta to act as Chairman of the Corporation, during the absence on furlough of the Hon'ble Mr. R. T. Greer, C.S.I., or until further orders.

Calcutta.

No. 676T.M.—The 20th May 1905.—It is hereby notified that, under section 10 of the Bengal Local Self-Government Act, III of 1885, the Lieutenant-Governor is pleased to appoint Babu Souresh Chandra Sarkar to be a member of the Suri Local Board, in the district of Birbhum.

Birbhum.

E. A. GAIT,
Offg. Secy. to the Govt. of Bengal.

The Calcutta Gazette.

WEDNESDAY, MAY 24, 1905.

PART II.

Advertisements.

(N. B.—Advertisements, Notices, &c., intended for insertion in this part of the Gazette cannot be received after Noon on Monday.)

LAND SALE NOTICES.

Notification A.

NOTICE is hereby given under sections 6 and 13, Act XI of 1859, that the undermentioned estates and shares of estates in the district of Noakhali will be put up for sale at the office of the Collector of that district on the 14th June 1905 at 1 P.M. for arrears of revenue and other demands, which by law are realisable as arrears of land revenue.

When in columns 5, 7 and 9 of the appended statement it is stated that only a share is to be sold, it is to be understood that a separate account is kept for that share.

Tauzi No.	Name of mahal and pargana.	Sadar jama of the whole estate.	Whether the whole estate is to be sold.	If only a share is to be sold, specification of such share or shares.	Names of proprietors of property to be sold.	If only a share is to be sold, the sadar jama of such share.	If the whole estate is to be sold, the arrears due from it.	If only a share is to be sold, the arrears due from it.
1	2	3	4	5	6	7	8	9
1	Elahabad, pargana Elahabad.	...	Share ...	Residuary share 8 annas ..		Rs A. P. 852 8 4	...	Rs A. P. Land Revenue 309 11 5 Road Cess— 429 8 6 739 3 1

Noakhali, the 3rd May 1905.

B. C. SEN, Collector.

Notification A.

NOTICE is hereby given, under sections 6 and 13, Act XI of 1859, that the undermentioned estates and shares of estates in the district of Tippera will be put up for sale at the office of the Collector of that district on the 27th June 1905 at 12 o'clock for arrears of revenue and other demands which by law are realisable as arrears of land revenue.

When in columns 5, 7 and 9 of the appended statement it is stated that only a share is to be sold, it is to be understood that a separate account is kept for that share.

Tauzi No.	Name of mahal and pargana.	Sadar jama of whole estate.	Whether the whole estate is to be sold.	If only a share is to be sold, specification of such share or shares.	Names of proprietors of property to be sold.	If only a share is to be sold, the sadar jama of such share.	If the whole estate is to be sold, the arrears due from it.	If only a share is to be sold, the arrears due from it.
1	2	3	4	5	6	7	8	9
		Rs. A. P.					Rs. A. P.	
1932/3	Pargana Bardakhat Balmakandi Joar.	2,555 13 3	Whole ..	.....	Dwaraka Nath Barman and others.	.....	638 15 3	.....
1932/50	Pargana Bardakhat Joar Shingula.	1,380 3 1	Do. ...	... .	Purna Chandra Chakraberty and others.	... .	373 11 1	.....
1933/51	Pargana Bardakhat Tinchitta Joar.	940 3 9	Do. ...		Tarini Charan Bordhon and others.	...	193 14 2	

Comilla, the 15th May 1905. H. W. SCROOPE, Collector.

Notification A.

NOTICE is hereby given, under sections 6 and 13, Act XI of 1859, that the undermentioned estates and shares of estates in the district of Mymensingh will be put up for sale at the office of the Collector of that district on the 23rd June 1905 at 12 o'clock noon for arrears of revenue and other demands, which by law are realisable as arrears of land revenue.

When in columns 5, 7 and 9 of the appended statement it is stated that only a share is to be sold, it is to be understood that a separate account is kept for that share.

Tauzi No.	Name of mahal and pargana.	Sadar jama of whole estate.	Whether the whole estate is to be sold.	If only a share is to be sold, specification of such share or shares.	Names of proprietors of property to be sold.	If only a share is to be sold, the sadar jama of such share.	If the whole estate is to be sold, the arrears due from it.	If only a share is to be sold, the arrears due from it.
1	2	3	4	5	6	7	8	9
		Rs.		*Second-class estates.*			Rs. A. P.	
6178	Joyarchatal, pargana Baradakhat.	586	Whole ..	.....	Kali Sundari Dassya and others.	.....	9 9 3	.....
8580	Char Iswardia, pargana Mymensingh.	523	Do. ...	.....	Brojendra Kishore Roy Chaudhury and others.	.....	64 14 9	.....

Mymensingh Collectorate, the 13th May 1905. W. B. THOMSON, Collector.

Notification A.

NOTICE is hereby given, under sections 6 and 13, Act XI of 1859, that the undermentioned estates and shares of estates in the district of Burdwan will be put up for sale at the office of the Collector of that district on the 21st June 1905 at 12 o'clock noon for arrears of revenue for March 1905 kist and other demands, which by law are realizable as arrears of land revenue.

When in columns 5, 7 and 9 of the appended statement it is stated that only a share is to be sold, it is to be understood that a separate account is kept for that share.

Tauzi No.	Name of mahal and pargana.	Sadar jama of whole estate.	Whether the whole estate is to be sold.	If only a share is to be sold, specification of such share or shares.	Names of proprietors of property to be sold.	If only a share is to be sold, the sadar jama of such share.	If the whole estate is to be sold, the arrears due from it.	If only a share is to be sold, the arrears due from it.
1	2	3	4	5	6	7	8	9
		Rs. A. P.					Rs. A. P.	
17	Chak Durga, pargana Raulhati.	9,939 2 11	Whole estate is to be sold.	...	Seyadani Aymana Bibi ...	.....	2,424 0 1	

Burdwan Collectorate, the 16th May 1905. P. H. O'Bri[illegible], Collector.

Notification A.

NOTICE is hereby given, under sections 6 and 13, Act XI of 1859, that the undermentioned estates and shares of estates in the district of Monghyr will be put up for sale at the office of the Collector of that district on the 29th May 1905 at noon for arrears of revenue.

When in columns 5, 7 and 9 of the appended statement it is stated that only a share is to be sold, it is to be understood that a separate account is kept for that share

Tauzi No.	Name of mahal and pargana.	Sadar jama of whole estate.	Whether the whole estate is to be sold.	If only a share is to be sold, specification of such share or shares.	Names of proprietors of property to be sold.	If only a share is to be sold, the sadar jama of such share.	If the whole estate is to be sold, the arrears due from it.	If only a share is to be sold, the arrears due from it.
1	2	3	4	5	6	7	8	9
815	Sihanwan Karari, pargana Malki Sihanwan as per Register A.	Rs. A. P. 1,120 7 0	.....	The ijmali share which cannot be specified and which excludes the separate accounts specified below.— Rs. A. No 2, Chatru Singh . 113 0 ,, 3, Kali Prosad Singh. 213 0 ,, 5, Kharag Singh .. 5 4 ,, 6, Fazal Rahman 2 5 ,, 7, Gumani Rai ... 4 6 ,, 8, Mah a Singh ... 43 9 ,, 9, Bhim Singh, etc. 9 10 ,, 10, Jhandoo Singh, etc. 74 7 ,, 11, Bhagwan Prosad. 31 15 ,, 12, Khanter Singh 26 4 ,, 13, Gunnu Singh, etc. 79 0 ,, 14, Rabi Choudhry 17 14 Total ... 630 0	Mosamat Raghunatho Kunri and others.	Rs. A. P. 500 7 0	Rs. A. P.	Rs. A. P. 66 7 9

NOTE.—Separate accounts Nos. 2 and 3 will be created—*vide* Commissioner's No. 3123R., dated 31st March 1905.

Monghyr Collectorate, the 19th April 1905

C. A. OLDHAM, Collector.

Notification B.

NOTICE is hereby given, under sections 5 and 13, Act XI of 1859, that unless the arrears mentioned below are paid on or before the next latest date of payment, viz., the 28th April 1905, the undermentioned estates or shares of estates in the district of Puri will be put up for sale at the office of the Collector of that district on the 10th July 1905 at 12 o'clock noon for the said arrears.

When in columns 5, 7 and 9 of the appended statement it is stated that only a share is to be sold, it is to be understood that a separate account is kept for that share and that the other share or shares in the estate not specifically mentioned in column 5 are excluded from the sale.

Tauzi No.	Name of mahal and pargana.	Sadar jama of whole estate.	Whether the whole estate is to be sold.	If only a share is to be sold, specification of such share or shares.	Names of proprietors of property to be sold.	If only a share is to be sold, the sadar jama of such share.	If the whole estate is to be sold, the arrears due from it.	If only a share is to be sold, the arrears due from it.	Nature and amount of demand for which to be sold.
1	2	3	4	5	6	7	8	9	10
185 2	Killah Rupas, pargana Athais	Rs. A. P. 1,689 0 0	.	A P. Kismat . 9 4	Trilochan Chaudhuri and others	Rs. A. P 985 5 0	Rs. A. P.	Rs A. P. 491 11 6	Due for kist April 1905.
166 1	Ta. Ganeswarpur, pargana Banchas.	1,619 0 0	.....	,, ... 9 0	Baladev Prakas Bramhachari.	910 11 0	.....	457 0 0	Ditto.
166 2	Ditto	1,619 0 0	... .	,, ... 7 0	Chandra Moni Debya, mother and guardian of Hanuman Khentia.	708 5 0	... ..	354 0 0	Ditto.
66	Ma. Durgadaspur, pargana Kotrahang.	879 0 0	Whole ...	.	Raja Mukund Dev		439 0 0	.	Ditto.
79 6	Ma. Thanthana, pargana Kotrahang.	653 0 0	..	Kismat ... 13 0	Dinabandhu Pain, brother and guardian of Gopi Nath Pain and others.	530 9 0		264 14 0	Ditto.
347	Ta. Amuri, pargana Purbadual.	1,316 0 0		,, ... 8 0	Nayanmali Jemadie, mother and guardian of Durga Charan Jagadeb Rai.	608 0 0	.	304 0 0	Ditto
347 2	Ditto	1,316 0 0	.	,, . 8 0	Radha Mohan Rai	608 0 0		304 0 0	Ditto.

Puri Collectorate, the 7th April 1905.

J. R. BLACKWOOD, Collector.

Notification A.

NOTICE is hereby given, under sections 6 and 13, Act XI of 1859, that the undermentioned estates and shares of estates in the district of Hooghly will be put up for sale at the office of the Collector of that district on the 5th of June 1905, at 12 noon for arrears of revenue and other demands which by law are realisable as arrears of land revenue (25th April 1905).

When in columns 5, 7 and 9 of the appended statement it is stated that only a share is to be sold, it is to be understood that a separate account is kept for that share.

Tauzi No.	Name of mahal and pargana.	Sadar jama of whole estate.	Whether the whole estate is to be sold.	If only a share is to be sold, specification of such share or shares.	Names of proprietors of property to be sold.	If only a share is to be sold, the sadar jama of such share.	If the whole estate is to be sold, the arrears due from it.	If only a share is to be sold, the arrears due from it.
	2	3	4	5	6	7	8	9
144	Sankarpore, pargana Khoalpore.	Rs. A. P. 2,933 5 8	Entire	Nil	Promotho Nath Mullic, Trustee to the estate of Kumar Hari Prosad Ray	Nil	Rs. A. P. 29 7 4	Nil
100	Gobindopore, pargana Boro.	3,403 5 6	Do. ...	,,	Kedar Nath Kundoo Chowdhuri and others.	,,	11 7 11	,,
151	Bijoypore, pargana Boro.	723 6 9	Do. ...	,,	Kamal Krishna Kundoo Chowdhuri and others.	,,	2 0 5	,,

Hooghly Collectorate, the 25th April 1905.

KHAGENDRA NATH MITRA, *for* Collector.

Advertisement of Sale.

NOTICE is hereby given that the proprietary right of Government, to the undermentioned estate, situate in the district of Hooghly, will be sold by public auction subject to the conditions specified below, at the Hooghly Collectorate on 5th June 1905, corresponding to 22nd Jaishtha 1312 B.S.

Conditions of Sale.

1st.—The estate is to be sold to the highest bidder above the upset price, viz, Rs. 49-2. The purchaser of this estate will be registered as the proprietor of the estate, and the entire proprietary right of Government will be transferred to him subject to the payment of a revenue fixed in perpetuity of Rs. 24-9, as per schedule given below.

2nd.—The sale is to be subject to existing leases and to the rights conferred by the settlement proceedings and by the laws in force, and purchasers are to be bound to respect the rights of resident cultivators who have signed the schedule of assessment prepared by the revenue authorities.

3rd.—If the amount of purchase-money does not exceed Rs. 100, the whole amount is to be paid down at once.

4th.—If the amount of purchase-money exceeds Rs 100, one-fourth of the amount of bid is to be immediately deposited If the balance be not paid by the noon of the fifteenth day after the sale, reckoning the day of sale as one, or, if that day be a close holiday, then by the noon of the first succeeding office day, the sale is to be cancelled (the sum deposited being forfeited to Government), and the estate is to be again put up to sale at the risk of the defaulting purchaser, after issue of advertisement, as in the case of original sale.

Number of estate on the district roll.	Name of estate and pargana.	Description of lands comprised in the estate.	Boundaries. North	South.	East.	West.	Approximate area.	Name of tenant.	Rental	Revenue.	Upset price.
				In mauza Chottodangal.			B. K. CH		Rs. A.	Rs. A.	Rs. A.
4859	Chhotadangal Byrah.	Sali Doem plot No. 1.	Mehir Kundu and Mohendra Kotal.	Sitaram Pandit, etc.	Mohendra Kotal, etc.	Naran Pakre, etc.					
		Ditto 2	Jadab Parel ...	Nondo Koley	Rasik Kotal	Naran Pakrey					
		Ditto 3	Baroda Barui ...	Naran Pakrey	Baroda Mallik	Babu Baksi ...					
		Ditto 4	Doyal Nandy ...	Rasik Kotal ..	Babu Baksi	Doyal Nandy					
		Sali Soem plot No. 5.	Trilok Faridar's Chakran.	Hori Koley	Dinoo Peada	Babu Lal Baksi.					
		Ditto 6	Trilok Faridar, etc.	Kirti Bash Porel	Babu Baksi ...	Kalaram Kundu.					
		Ditto 7	Kali Bari (Goddess).	Poker Pal	Mohendra and Nobo Kotal.	Rasik and Nobo Kotal.					
		Ditto 8	Mohendra Jana ...	Ram Lal Hazra	Sole Mori Pond.	Ram Lal Hazra					
		Ditto 9	Solemori Pond	Ram Lal Pandit	Sole Mori Pond.	Mrigendra Hazrah.					
		Sali Aol plot No. 10.	Fakir Dass Dalui	Madan Sat	Tapasi Halt, etc.	Baneswar Rana.					
				In mauza Pechera.			13 15 11	Babu Lal Kabori.	24 9=	24 9	49 2
		Sali Doem plot No. 1.	Bhola Nath Patra	Denor Peada ...	Poran Patra	Khudi Rai "Goddess."					
		Ditto 2	Naran Dalui, etc.	Ra'u Bokai ...	Khudi Roy ...	Tarini Bagdi					
		Ditto 3	Babu Baksi, etc	Rakhal Alu ...	Ram Lal Hazrah.	Babu Boksi, &c.					
		Ditto 4	Tarini Bagdi ...	Khudi Roy Goddess.	Babu Baksi	Rakhal Alu					
		Ditto 5	Faridari Chakran	Kali Goddess .	Rakhal Alu	Soshi Chokrobutty.					
				In mauza Mamudpur.							
		Sali Soem plot No. 1.	Babu Baksi	Ananto Bag	Harco Bag	Chauk idari Chakran.					
		Ditto 2	Jattra Sidhi ...	Babu Baksi	Tincori Ghose	Nil ...					
		Ditto 3	Horoo Ghorui ...	Bendo Metea ..	Trilok Hazrah	Ram Bar ...					
		Ditto 4	Triloke Hazra ...	Sankar Mater .	Trilok Faridar	Babu Muti .					

Hooghly Collectorate, Chinsura, the 27th April 1905.

K. AHMAD, *for* Collector.

Notification A.

NOTICE is hereby given, under sections 6 and 13, Act XI of 1859, that the undermentioned estates and shares of estates in the district of Monghyr will be put up for sale at the office of the Collector of that district on the 29th May 1905 at noon for arrears of revenue.

When in columns 5, 7 and 9 of the appended statement it is stated that only a share is to be sold, it is to be understood that a separate account is kept for that share.

Tauzi No.	Name of mahal and pargana.	Sadar jama of whole estate.	Whether the whole estate is to be sold.	If only a share is to be sold, specification of such share or shares.	Names of proprietors of property to be sold.	If only a share is to be sold, the sadar jama of such share.	If the whole estate is to be sold, the arrears due from it.	If only a share is to be sold, the arrears due from it.
1	2	3	4	5	6	7	8	9
		Rs. A. P.		*Temporarily-settled estates.*		Rs. A. P.	Rs. A. P.	Rs. A. P.
2800	Arazi Barari, chak Balsarnath, pargana Malki.	1,215 11 0	Whole ...	.....	Madho Pershad Jagridher Narain Pershad, minor, under guardianship of Mussammat Terbeni Kumri and others.	.....	71 6 0	.....

Monghyr Collectorate, the 28th April 1905. C. A. OLDHAM, Collector.

Notification A.

NOTICE is hereby given, under sections 6 and 13, Act XI of 1859, that the undermentioned estates and shares of estates in the district of Backergunge will be put up for sale at the office of the Collector of that district on the 23rd June 1905 corresponding to 9th Ashar 1312 B.S., at 12 noon for arrears of revenue and other demands, which by law are realisable as arrears of land revenue.

When in columns 5, 7 and 9 of the appended statement it is stated that only a share is to be sold, it is to be understood that a separate account is kept for that share.

Tauzi No.	Name of mahal and pargana.	Sadar jama of whole estate.	Whether the whole estate is be sold.	If only a share is to be sold, specification of such share or shares.	Names of proprietors of property to be sold.	If only a share is to be sold, the sadar jama of such share.	If the whole estate is to be sold, the arrears due from it.	If only a share is to be sold, the arrears due from it.
1	2	3	4	5	6	7	8	9
		Rs. A. P.				Rs. A. P.	Rs. A. P.	Rs. A. P.
1445	Joar Durgapur, pargana Bozergomedpur.	824 4 10½	.....	Residuary share 10a. will be sold and share 6a. will be excluded from the sale.	Pyari Mohon Pal and others.	512 10 10½	.....	141 5 5½
1446	Mahal Darihat, Rajabarigunj, pargana ditto.	944 9 7	.....	Residuary share 14a. 15g. will be sold and share 1a. 5g. will be excluded from the sale.	Raja Sree Nath Roy Choudhury and others.	870 13 7	.....	87 1 8½
1479	Taluk Ganga Gobindo Nag and others, pargana ditto.	803 9 8½	Whole ...	.....	Chandra Bin de Pal Choudhury and others.	.....	215 7 8	.....
1533	Taluk Krishna Prosad Guha, pargana ditto.	3,960 13 8	Do. ..	.....	Brojo Lal Roy Chaudhury and others.	.....	106 4 10½	.....
1628	Joar Ramna Bamna, taluk Mohammad Safi, pargana ditto.	19,487 10 8	.....	Separate account No. 2 share— 6a 1g. 2kr. 2kt. 1rd 3kr. 1kt. 8til will be sold, and share 9a. 18g. 1kr. 18til 3kr. 3kg. 18gd. 1kt. 12til will be excluded from the sale.	Mr. G. L. Garth and Mr. H. L. Weatherall, trustees to the estate of Golam Ahad Choudhury and others.	7,406 13 0	.....	38 14 5
1678	Taluk Said Miron, pargana ditto.	1,183 14 9½	Whole ...	...	Iochamoyee Gupta and others.	.	444 11 0½	. ....
3845	Silimabad zamindari 13a., pargana Silimabad.	3,559 8 0½	.....	Residuary share 7a. 10g. will be sold, share 2a. 10g. 2½kr. will be sold separately and the rest 5a 13g. 1½kr. will be excluded from the sale.	Kaseswari Choudhurani, executrix to the estate of her husband Durga Narayan Roy Choudhury.	1,337 4 9½	.....	702 2 9½
3845	Ditto ...	3,559 8 0½	.....	Separate account No. 1 share— 2a. 10g. 2½kr. will be sold, share 7a. 10g. will be sold separately and share 5a. 13g. 1½kr. will be excluded from the sale.	Ditto ...	637 6 7	.....	281 3 9½
4532	Abad Debpur, pargana Ratnadi Kalikapur.	2,333 0 0	Whole ..	.....	Satis Chandra Chakravarti and others.	.....	1,749 12 0	.....
4546	Padma *alias* Ramjanpur, pargana Kasimpur, Sehalapatti.	5,383 0 0	Do. ...	.....	Ambica Charan Chakravarty and others.	.....	2,691 0 0	.....
4767	Char Udaypur, pargana Chandradvip.	566 0 0	Do. .	... ..	Babu Chandi Charan Chatterjee, Manager, Court of Wards, to the estate of Sir Raja Sourindra Mohan Tagore, Kt., C.I.E., etc., and another.	... ..	566 0 0	.....
5198	Char Kakra, together with Rampur, pargana Jaxira.	7,939 0 0	Do. ...	.....	Abdul Goni and others.		1,325 15 0	.....
5268	Char Manpura, pargana Jaxira.	1,016 2 0	Do. ...	.....	Aseroddin and others	....	510 0 6	.....
6354	Surplus land of thak Koyaria, pargana Kasimpur Sehalapatti.	886 0 0	Do. ...	.....	Syed Mohammad Mozaffar Hoshen Choudhury and others.	.....	705 10 0	.....

Backergunge Collectorate, the 11th May 1905. H. C. STEBBATFEILD, Collector.

Advertisement of Sale.

NOTICE is hereby given that the undermentioned plots of land, no longer required by Government, situated on the Moghalserai-Gaya Railway, in the district of Gaya, will be put up for sale at 12 o'clock noon on Friday, the 2nd June 1905, corresponding to the 14th Jeth 1312 Fusli, at the Court of the Collector of Gaya.

The purchasers of the several plots of land will be subject to the following conditions:—

1st.—The purchasers will have no power to make any excavation on the land nearer than 15 feet from the Railway fencing, or plough the land closer than three feet from its foundation.

2nd.—If the amount of purchase-money does not exceed Rs. 100, the whole amount must be paid down at once.

3rd.—If the amount of purchase-money exceed Rs. 100, one-fourth of the amount must be immediately deposited. If the balance be not paid by noon of the fifteenth day after the sale, reckoning the sale day as one, or if that day be a close holiday, then by noon of the first succeeding office day, the sale shall be cancelled, the sum deposited being forfeited to Government, and the lot again put up for sale at the risk of the defaulting purchaser, after issue of advertisement, as in the case of the original sale.

4th.—The plots of the land will be sold revenue-free to the highest bidders.

5th.—The purchasers shall be put in possession on receipt by the Collector of the orders of the Board confirming the sale.

Consecutive lot No.	Name of district.	Pargana and mauza.	Number of mile on which the land is situated.	Situated on which side of the railway.	Approximate area.	Land excluded from sale,	Commencement and termination of lot.	Boundary of lot.
					B. K. D.			
I	Gaya ...	Mauza Jamore, pargana Siris.	44th	On the south of the Railway line.	65 8 0	Nil	Nil	*North.*—Main line of Moghalserai-Gaya Railway. *South.*—Village Jianbigha. *East.*—Lands of village Jamore. *West.*—River Baltone.
II	Do. ...	Abdulpore, pargana Charkawan.	25th	On the south and north of the Railway line.	16 15 0	Nil	1 & 2	1st lot bounded on the— *North.*—By the main line of the Moghalserai-Gaya Railway. *South and east.*—By the lands of village Abdulpore. *West.*—By river Dhodai. 2nd lot on the— *North.*—By the lands of village Abdulpore. *South.*—By the main line of the Moghalserai-Gaya Railway. *East.*—By the lands of village Abdulpore. *West.*—By river Dhawar.
III	Do. ...	Rowna, pargana Kaber.	15th	On the south of the Railway line.	5 16 2	Nil	Nil	*North.*—Nera Nadi. *South, east and west.*—By lands of village Rowna.
IV	Do. ...	Jamalpore (Azmatganj), pargana Kaber.	11th	On the north of the Railway line.	4 0 4	Nil	Nil	*North, west and east.*—By the lands of village Azmatganj. *South.*—By main line.
V	Do. ...	Sakhawa, pargana Dakhmer.	9th & 10th	On the south of the Railway.	25 17 12	Nil	Nil	*North.*—Lands of village Sakhawa. *South.*—Main line of the Moghalserai-Gaya Railway. *East.*—Lands of Sakhawar and Dakhmer *West.*—Lands of Sakhawar.

Gaya, the 12th April 1904.

SHAMSUDDIN HYDER, *for* Collector.

Advertisement of Sale.

NOTICE is hereby given that the undermentioned plots of land, no longer required by Government, situated along the Chowrashi Branch of the Bengal-Nagpur Railway, in the district of Manbhum, will be put up to sale at 4 P.M. on Thursday, the 8th June 1905, corresponding to the 25th Jaista 1312 B.S., at Ramkanali station of the Bengal-Nagpur Railway.

The purchasers of the several plots of land will be subject to the following conditions:—

1st.—The purchasers will have no power to make any excavations on the land nearer than fifteen feet from the Railway boundary, or to plough the land nearer than three feet from the same.

2nd.—If the amount of purchase-money does not exceed Rs. 100, the whole amount must be paid down at once.

3rd.—If the amount of purchase-money exceeds Rs. 100, one-fourth of the amount must be immediately deposited. If the balance be not paid by noon of the fifteenth day after the sale, reckoning the day of sale as one, or if that day be a close holiday, then by noon of the first succeeding office day, the sale shall be cancelled, the sum deposited being forfeited to Government, and the lot again put up for sale at the risk of the defaulting purchaser, after issue of advertisement, as in the case of original sale.

4th.—The plots of land will be sold revenue-free to the highest bidders.

5th. The purchasers shall be put in possession on receipt by the Collector of the orders of the Board confirming the sale.

Consecutive lot No.	Name of district.	Pargana and mauza.	Number of mile on which land is situate.	Situated on which side of the railway.	Approximate area of lot in bighas and in acres.	
					B. K. C.	A. R. P.
1 and 2	Manbhum ...	Pargana Chowrashi, villages Nodiha and Narainpur.	8	On the north side of the railway line.	27 9 5·01	9 0 12·73

GANGA CHARAN CHATTERJEE, Collector under Act I of 1894, Burdwan and Manbhum.

Land Acquisition Office, Burdwan and Manbhum, the 15th April 1905.

Advertisement of Sale.

NOTICE is hereby given that the undermentioned plots of land, no longer required by Government, situated along the Hajipur Branch Railway, in the district of Muzaffarpur, will be put up to sale at 1 o'clock on Friday, the 30th June 1905, corresponding with the 13th Jaith of 1312 Fusli, at Muzaffarpur.

The purchasers of the several plots of land will be subject to the following conditions:—

1st.—The purchasers will have no power to make any excavations on the land nearer than 15 feet from the railway boundary, or to plough the land nearer than 3 feet from the same.

2nd.—If the amount of purchase-money does not exceed Rs. 100, the whole amount must be paid down at once

3rd.—If the amount of purchase-money exceed Rs. 100, one-fourth of the amount must be immediately deposited. If the balance be not paid by noon of the fifteenth day after the sale, reckoning the day of sale as one, or if that day be a close holiday, then by noon of the first succeeding office day, the sale shall be cancelled, the sum deposited being forfeited to Government, and the lot again put up for sale at the risk of the defaulting purchaser, after issue of advertisement, as in the case of original sale.

4th.—The plots of land will be sold revenue-free to the highest bidders.

5th.—The purchasers shall be put in possession on receipt by the Collector of the orders of the Board confirming the sale.

Consecutive lot No.	Name of district.	Pargana and mauza.	Number of mile on which land is situate.	Situated on which side of the Railway.	Approximate area of lot in bighas and in acres.		Land excluded from sale from each lot.		Commencement and termination of lot.	Boundary of lot.
					B. K. C.	A. R. P.	Reasons for exclusion.	A. R. P.		
1	Muzaffarpur.	Chupraledi *alias* Maripore and Bhagwanpore, pargana Besara.	Mile 1 of Hajipur line.	West of the Railway.	0 12 5	0 0 32	.....	.....	.....	*North*—Orchard of Tabarak Hussain. *South*—Public road. *East*—Railway fencing. *West*—Orchard of Kunja Sahu.
2	Ditto ...	Chupraledi *alias* Maripore.	Ditto ...	East of the Railway.	0 4 4	0 0 11·2	... .	.....	.....	*North*—Garden of Mr. Franjy. *South*—Public road. *East*—Garden of Mr. Franjy. *West*—Railway fencing.
3	Ditto ...	Ditto ...	Miles 1 and 2 of Hajipur line.	Ditto ...	0 4 0	0 0 11	.....	.....	... .	*North*—Public road. *South*—Orchard of Safdar Hussain. *East*—Orchard of Abdul Jabar. *West*—Railway fencing.
4	Ditto ...	Ditto ...	Ditto ...	On both sides of the Railway.	2 18 2	0 2 20	This being a part of the District Board road.	0 2 20	.....	

The 17th April 1905.

KALI MOHAN SEN, for Collector.

Advertisement of Sale.

NOTICE is hereby given that the proprietary right of Government, as specified in the conditions of sale below, to the undermentioned estate, situate in the district of Muzaffarpur, will be put up to sale at the Muzaffarpur Collectorate on the 5th June 1905.

The purchasers will be subject to the following conditions of sale:—

Conditions of Sale.

1st.—The estate to be sold to the highest bidder above the upset price, which will be fixed by the Collector at the time of sale. The purchaser of this estate will be considered as the proprietor of the estate, and the entire proprietary right of Government in such estate will be transferred to him subject to the revenue fixed in perpetuity.

2nd.—The sale to be subject to existing leases and to the rights conferred by the settlement proceedings and by the laws in force, and the purchasers to be bound to respect the rights of resident cultivators who have signed the schedule of assessment prepared by the Revenue authorities.

3rd.—If the amount of purchase-money do not exceed Rs. 100, the whole amount to be paid down at once.

4th.—If the amount exceed Rs. 100, one-fourth of the amount bid to be immediately deposited. If the balance be not paid by noon of the fifteenth day after the sale, reckoning the day of sale as one, or if that day be a close holiday, then by noon of the first succeeding office day, the sale is to be cancelled, the sum deposited being forfeited to Government, and the estate to be again put up to sale at the risk of the defaulting purchaser after issue of advertisement as in the case of original sale.

Number on the district roll.	Name of estate and pargana.	Approximate area in acres.	Government revenue assessed.	REMARKS.
			Rs. A. P.	
11799	Baijnathpur Katesar, pargana Tariani	·67	1 8 9	

Muzaffarpur Collectorate, the 28th April 1905.

E. V. LEVINGE, Collector.

Notification A.

NOTICE is hereby given, under sections 6 and 13, Act XI of 1859, that the undermentioned estates and shares of estates in the district of Gaya will be put up for sale at the office of the Collector of that district on the 5th June 1905 at 6 A.M., for arrears of revenue and other demands which by law are realisable as arrears of land revenue.

When in columns 5, 7 and 9 of the appended statement it is stated that only a share is to be sold, it is to be understood that a separate account is kept for that share, and that the other share or shares in the estate are excluded from the sale.

Tauzi No.	Name of mahal and pargana.	Sadar jama of whole estate.	Whether the whole estate is to be sold.	If only a share is to be sold, specification of such share or shares.	Names of proprietors of property to be sold.	If only a share is to be sold, the sadar jama of such share.	If the whole estate is to be sold, the arrears due from it.	If only a share is to be sold, the arrears due from it.
1	2	3	4	5	6	7	8	9
		Rs. A. P.				Rs. A. P.	Rs. A. P.	Rs. A. P.
1389	Shahbaspur Tesour, pargana Bhelawar.	508 13 0	The whole	......	Mussammat Rani Sunder Koer.	......	188 15 0	......
3574	Nadawat, pargana Narhat.	2,500 0 0	Ditto ...	......	Ditto ...	......	936 8 0	
4353	Mohanpore Khijua Wagairah Yazdah kalam, pargana Pachrukhi.	3,031 0 0	......	The residuary ijmali share exclusive of the separated shares consisting of— As. 1. Mohanpore ... ... 4 2. Bhupatpore ... ... 4 3. Khijua ... ... 4 4. Chhabail ... ... 6 5. Ohanotha ... ... 12 6. Mahudih ... ... 12 7. Kendua Karanpore ... ... 12 8. Gorhari ... ... 4 9. Berdih 12	Dirgopal Lal ...	1,195 0 0		47 10 6
4411	Azamgarh taluqa, pargana Sherghatti.	5,231 12 0	......	The residuary ijmali share exclusive of the separated shares consisting of— As. P. K. K. 1. Azamgarh Masaurha Gangti ... 11 4 0 0 2. Adalpore ... ... 16 0 0 0 3. Andho Majhaulia ... 16 0 0 0 4. Aimnabad ... ... 6 8 0 0 5. Amas-Bhualpore ... 16 0 0 0 6. Bande Gara ... 6 8 0 0 7. Bankey ... ... 6 8 0 0 8. Bankey Samodh ... 6 8 0 0 9. Bishunpore ... ... 9 4 0 0 10. Bela ... ... 6 8 0 0 11. Burha Burhi Lengurahi ... ... 11 4 0 0 12. Bajarkar ... ... 6 8 0 0 13. Bhimchak ... ... 16 0 0 0 14. Bahera Khurd ... 16 0 0 0 15. Berri ... ... 16 0 0 0 16. Chainpore ... ... 16 0 0 0 17. Chilore ... ... 16 0 0 0 18. Dabiar ... ... 16 0 0 0 19. Dharampore ... ... 16 0 0 0 20. Dhamna main chak Dhamni ... ... 16 0 0 0 21. Dhanawan ... ... 16 0 0 0 22. Dhijabigha ... ... 9 9 6 5 23. Diha chak Deona Kalevaupore ... 16 0 0 0 24. Dumrawan khas ... 11 4 0 0 25. Gangti ... ... 16 0 0 0 26. Garhwaiya ... ... 6 8 0 0 27. Itawan ... ... 6 8 0 0 28. Jamuar khurd ... 16 0 0 0 29. Koil chak ... ... 6 8 0 0 30. Kajh ... ... 16 0 0 0 31. Kendua Kadarkoni 11 4 0 0 32. Kosmpi ... ... 16 0 0 0 33. Kartahi ... ... 16 0 0 0 34. Kendua khas... ... 16 0 0 0 35. Khodga or Khudgi 11 4 0 0 36. Man haulia Khurd 11 4 0 0 37. Madanbigha ... 9 9 6 5 38. Man Kuari Main Zamin Bank ... 6 8 0 0 39. Mandar ... ... 6 8 0 0 40. Nima ... ... 16 0 0 0 41. Nawadah ... ... 16 0 0 0 42. Nawakhap ... ... 6 8 0 0 43. Nonischak ... ... 16 0 0 0 44. Pirauli ... ... 16 0 0 0 45. Pampapore ... ... 16 0 0 0 46. Pathra Kalan and Khurd ... ... 16 0 0 0 47. Pandaula Mowlan Chaiwar Dhondhua ... ... 16 0 0 0 48. Parsa Nizamat ... 16 0 0 0 49. Ratanchak ... ... 11 4 0 0 50. Rohi Parewa Dhewa 16 0 0 0 51. Sonepore ... ... 6 8 0 0 52. Simarhat ... ... 16 0 0 0 53. Sundekumhari ... 16 0 0 0 54. Sarara ... ... 11 4 0 0 55. Sondaha Choreban Ratansouth ... 16 0 0 0 56. Sagdiha ... ... 16 0 0 0 57. Sarawankhas ... 16 0 0 0 58. Sondiha ... ... 16 0 0 0 59. Saliganj Belhari ... 16 0 0 0 60. Sherghatti khas ... 6 8 0 0 61. Singhpore ... ... 6 8 0 0 62. Simarhat ... ... 16 0 0 0 63. Tetaria ... ... 16 0 0 0 64. Tulachak ... ... 16 0 0 0 65. Telibandh Sorhar ... 16 0 0 0 66. Tikra khurd ... 16 0 0 0	Kali Charan Singh.	4,216 12 0	..	1,697 10 6

Tauzi No.	Name of mahal and pargana.	Sadar jama of whole estate.	Whether the whole estate is to be sold.	If only a share is to be sold, specification of such share or shares.	Names of proprietors of property to be sold.	If only a share is to be sold, the sadar jama of such share.	If the whole estate is to be sold, the arrears due from it.	If only a share is to be sold, the arrears due from it.
1	2	3	4	5	6	7	8	9
		Rs. A. P.				Rs. A. P.	Rs. A. P.	Rs. A. P.
4548	Gurua taluqa, pargana Sherghatti.	15,097 14 0	.....	Separate account No. 5. consisting of— As. P. K. 1. Rajpore ... ... 8 3 0 2. Beldih .. ... 8 0 0 3. Karhara .. ... 8 0 0 4. Kendua .. ... 0 9 12 5. Baraini Chak ... 2 4 0 6. Bahak ... ... 8 0 0 7. Tilaiya Khiri ... 8 0 0 8. Jalalpore ... .. 8 0 0 9. Deoguria ... ... 8 0 0 10. Ramabigha ... ... 8 0 0 11. Sirampore .. ... 8 0 0 12. Gamharia Tetaria Bishunbigha ... 8 0 0 13. Bankat .. .. 8 0 0 14. Kamalpore Ismailpore Kalayanpore . 8 0 0 15. Kumbhi Shamali ... 8 0 0 16. Mobarakpore ... 4 0 0	Mussammat Fakhrunnissa Begam and others.	537 4 0		53 11 1
4579	Jaipur Dumrawan, pargana Sherghatti.	4,898 8 0		The residuary ijmali share exclusive of the separated shares consisting of— As. 1. Jaipur-Dumrawan ... ... 8 2. Akhowri Khap ... . 8 3. Pindra ... ... 8 4. Zari Khap ... . 8 5. Daudpore *alias* Pandoul ... 8 6. Deoghar Khap ... ... 4 7. Ibrahimpore ... . 8 8. Hardia ... ... 8 9. Kolhua ... ... 8 10. Makhdumpore ... ... 8 11. Basir Khap ... ... 4 12. Manjhar 8	Durga Prasad ...	1,035 8 0	.....	446 12 0
4772	Angni, pargana Siris.	532 3 0	The whole	.....	Raghupat Pratap Singh and others.	.....	0 2 0	.....

Gaya Collectorate, the 5th May 1905.

J. DONALD, Collector.

Notification A.

NOTICE is hereby given, under sections 6 and 13, Act XI of 1859, that the undermentioned estates and shares of estates in the district of Birbhum will be put up for sale at the office of the Collector of that district on the 24th June 1905 at 11 A.M. for arrears of revenue and other demands, which by law are realisable as arrears of land revenue.

When in columns 5, 7 and 9 of the appended statement it is stated that only a share is to be sold, it is to be understood that a separate account is kept for that share, and that the other share or shares in the estate are excluded from the sale.

Tauzi No.	Name of mahal and pargana.	Sadar jama of whole estate.	Whether the whole estate is to be sold.	If only a share is to be sold, specification of such share or shares.	Names of proprietors of property to be sold.	If only a share is to be sold, the sadar jama of such share.	If the whole estate is to be sold, the arrears due from it.	If only a share is to be sold, the arrears due from it.
1	2	3	4	5	6	7	8	9
		Rs. A. P.				Rs. A. P.		Rs. A. P.
17	Kagash, pargana Moureswar Sabek.	17,182 13 0	.....	Residuary share 2a. 19g. 3k. 1kt. and 6d. share of mauzas Amdahara Chuk, Alal-Bandi, Ishabpur, Ishanpur *alias* Ichakpur, Uttermath, Ekuti, Kalyanpur, Ka[illegible], Kartickgunj, Kalipur, Kuchuighata, Kushumjatra, Kusaipur, Kristopur, Khaticpur, Khagra Chuk, Khirija, Chandpur, Jamkala, Jalla, Jhikordaha Chuk, Thakurgaown Chuk, Tikordaha, Tilpara Chuk, Dari Bajejami-Bajeupti, Dhobagaon, Dhobajole, Nowapara, Nanas Chuk, Nirisha, Paikpara, Pargaon, Piasala, Bahara Chuk, Belia, Bipra-Salgoria, Buicha Chuk, Bhagabatipur, Moidipur, Mallati, Mahabatpur Chuk, Mohidipur Chuk, Moheepur, Maligaon Chuk, Metery, Rasulgunj, Rajballav Chuk, Rupadihi, Salgoria, Sibpur, Salamath, Horikora, Horispur, Hazrapur, and 3a. 5g. 10kag of Bausra and Bahadoorgunj. All other shares than that specified will be excluded from the sale.	Asu Tosh Mookerjee and others.	2,945 15 0	.....	156 9 10

Birbhum Collectorate, Suri, the 4th May 1905.

S. C. MUKERJEE, Collector.

Notification A.

NOTICE is hereby given, under sections 6 and 13, Act XI of 1859, that the undermentioned estates and shares of estates in the district of Shahabad will be put up for sale at the office of the Collector of that district on Saturday, the 3rd June 1905, corresponding to 16th Jeth 1312 F.S., at 7 A.M., for arrears of revenue and other demands which by law are realisable as arrears of land revenue.

When in columns 5, 7 and 9 of the appended statement it is stated that only a share is to be sold, it is to be understood that a separate account is kept for that share.

Tauzi No.	Name of mahal or pargana.	Sadar jama of whole estate.	Whether the whole estate is to be sold.	If only a share is to be sold, specification of such share or shares.	Names of proprietors of property to be sold.	If only a share is to be sold, the sadar jama of such share.	If the whole estate is to be sold, the arrears due from it.	If only a share is to be sold, the rears due from it.
1	2	3	4	5	6	7	8	9
		Rs. A. P.				Rs. A. P.	Rs. A. P.	Rs. A. P.
387	Lowhur Bujrug, pargana Arrah.	866 10 6	Whole ...	.....	Audeah Singh and others.	.....	5 0 0	.....
434	Mahuli Khurd, pargana Arrah.	550 0 0	Do.	.....	Ram Charan Singh and others.	.....	175 0 0	.....
9075 21	Amaon, pargana Chainpur.	11,261 13 8	Nil ...	The shares of khata No. 21 to be sold are as follows :—	Thakur Kuldip Narain Singh and others.	565 8 3	.....	20 11 0
				As. P. K.				
				Amaon 1 1 10				
				Amarahe 1 1 10				
				Anantpur Khilopur 1 1 10				
				Asilai Patna 1 1 10				
				Bararhi 1 1 10				
				Baheri 1 1 10				
				Chintamanpur 1 1 10				
				Dandwa Viran 1 1 10				
				Dasaunti 1 1 10				
				Dewane 1 1 10				
				Dandwa Dakhili Fakhirabad 0 8 2				
				hampur 1 1 10				
				Rampur Bareju 1 1 10				
				Sahe Bahe 1 1 10				
				Siardanr 1 1 10				
				Semri ..? 1 1 10				
				Saralia 1 1 10				
				Sarai Dharhar 1 1 10				
				Piparia 1 1 10				
				Bhadoura 0 8 2				
				Nati 1 0 0				
				Pipra Sakarwar 1 1 10				
				Pakarihar 1 1 10				
				Jamurni 1 1 10				
				Chouthi 1 1 10				
				Chak Kalaundi *alias* Chakia 1 1 10				
				Sikandarpur 0 8 2				
				Sikara 1 1 10				
				Surhia 1 1 10				
				Kulharia 1 1 10				
				Gorahand 1 1 10				
				Koharl 1 1 10				
				Karaunsi 1 1 10				
				Ismailpur 1 1 10				
				Kundwa 1 1 10				
				Kharsanda 1 1 10				
				Gangapur 0 8 2				
				Mehia 1 1 10				
				Nauan Bijai 1 1 10				
				Bagachhara 1 1 10				
				Khatas Nos. 24, 66, 67, 68 and 70 will also be sold.				
				The following shares are excluded from sale :—				
				Khata No. 1—				
				Three annas in each of the villages— Ismailpur, Amaon, Amarahe, Anantpur, Khilopur, Asilai Patna, Bararhi, Baheri, Piparia, Bhadoura, Nati, Pipra Sakarwar, Pakarihar, Jamurni, Chouthi, Chak Kalaundi *alias* Chakia, Chintamanpur, Asilai Khurd, Dasaunti, Dewani, Dandwa Viran, Rampur, Bareju, Sahe Bahe, Siardanr, Sarihra, Bagachhara, Rajpur, Milki, Nibi, Bharuhia, Mohomadpur, Saralia, Sarai, Dharhand, Dandwa, Dakhili Fakharabad, Sikandarpur, Sikara, Silathua, Surhia, Bilari, Karanpura, Kulharia, Gorahand, Koharl, Karaunsi, Kundwa, Kharsanda, Mehia, Nauan Bijai, Dighi, Lahopokar.				
				Khata No. 2—				
				Three annas in each of the villages Kharsanda and Dasaunti.				
				Khata No. 3—				
				As. P.				
				Koharl 3 0				
				Khata No. 4—				
				Jamurni 4 0				
				Khata No. 5—				
				Sikandarpur 3 0				
				Bhadoura 3 0				
				Khata No. 6—				
				Mehia 3 0				
				Gorahand 3 0				

Tauzi No.	Name of mahal or pargana.	Sadar jama of whole estate.	Whether the whole estate is to be sold.	If only a share is to be sold, specification of such share or shares.	Names of proprietors of property to be sold.	If only a share is to be sold, the sadar jama of such share.	If the whole estate is to be sold, the arrears due from it.	If only a share is to be sold, the arrears due from it.
1	2	3	4	5	6	7	8	9
2075 21	Amaon, pargana Chainpur—*contd.*	... ..	.....	Khata No. 7— Sarai Dharhand ... ... As. P. 3 0 Khata No. 8— Gangapur ... ... 3 0 Khata No. 9— Sahe Bahe ... ... 2 6 Khata No. 11— Bararhi ... ... 4 0 Khata No. 12— Silari ... ... 3 9 Khata No. 13— Sarai Dharhar ... ... 1 0 Khata No. 14— Two annas in each of the villages—Ismailpur, Amaon, Amaraha, Anantpur, Khilopur, Asilai Patna, Asilai Khurd, Bararhi, Baheri, Piparia, Bhadoura, Nati, Pipra Sakarwar, Pakarihar, Jamurni, Chouthi, Chak Kalaundi *alias* Chakia, Chintamanpur, Dasaunti, Dewane, Dandwa Viran, Rampur, Rampur Bareju, Sahe Bahe, Siardanr, Sirihra, Bagachhara, Rajpur, Milki, Nibi, Bharuhia, Mohomadpur, Saralia, Sarai Dharhand, Dandwa Dakhili Fakarabad, Sikandarpur, Sikara, Silathua, Semaria, Surhia, Silari, Karanpura, Kulharia, Goraband, Kohari, Karaunsi, Kundwa, Kharsanda, Gangapur, Mehia, Nauan Bijal, Dighi, and Lahopokar. Khata No. 15— P. K. Pakarihar ... ... 7 10 Khata No. 16— Two annas in each of the villages named against khata No. 14. Khata No. 17— As. P. K. Gangapur ... ... 1 0 13 Sikandarpur ... ... 1 0 13 Bhadoura ... ... 1 0 13 Khata No. 18— Karanpura ... ... 4 8 0 Khata No. 19— Bhadoura ... ... 0 6 0 Amaraha ... ... 0 6 0 Chauthi ... ... 0 6 0 Dandwa ... ... 2 0 0 Sikandarpur ... ... 0 6 0 Khata No. 20— 4c. 1p. 10k. in Sirihra, Bagachhara, Rajpur, Milki, Nibi, Bharuhia, Mohomadpur and Asilai Khurd. Khata No. 22— 11c. 16k. in each of the villages noted against khata No. 14, except in village Bhadoura, Dandwa, Dakhili, Fakharabad, Gangapur and Sikandarpur which are not in khata No. 22. Khata No. 23— 2p. 14k. in each of the villages noted in khata No. 14. Khata No. 25— P. Sahe Bahe ... ... 2 6 Khata No. 26— Amaon 1c. 4p. 10k. and 6p. in each of the villages Asilai Patna, Lahopokar, Dighi, Asilai Khurd, Sirihara, Bagachhara, Rajpur, Milki, Nibi, Bharuhia, Mohomadpur, Nati, Pipra, Sakarwar, Rampur Bareju, Jamurni, Dasaunti, Dewane, Sahe Bahe, Silathua, Kundwa, Kulharia, Kharsanda, Anantpur, Khilopur and Nana Bijal. Khata No. 27— Amaon 5p. 10k. and 3p. in each of the villages noted against Khata No. 26 except Amaon. Khata No. 28— As. Diwane ... ... 2 Khata No. 29— Diwane ... ... 1 Khata No. 30— Sikara 3				

Touzi No.	Name of mahal or pargana.	Sadar jama of the whole estate.	Whether the whole estate is to be sold.	If only a share is to be sold, specification of such share or shares.	Names of proprietors of property to be sold.	If only a share is to be sold, the sadar jama of such share.	If the whole estate is to be sold, the arrears due from it.	If only a share is to be sold, the arrears due from it.
1	2	3	4	5	6	7	8	9
2075 21	Amaon, pargana Chainpur—*concld.*	Rs. A. P.	.....	Khata No. 65—*concld.* As. P. K. M. D. Pipara Sakarwar ... 0 8 0 0 0 Gangapur ... ... 0 0 0 6 10 Rampur Bareju ... 0 7 0 0 0 Karanpura ... ... 0 2 5 0 0 Sarai Dharhand ... 0 1 6 13 5 Bararhi ... ... 0 1 0 0 0 Nati ... ... 0 3 16 14 0 Kulharia ... ... 0 2 10 0 0 Dighi ... ... 0 1 0 0 0 Silari ... ... 0 2 6 10 13 Sirahara, Bharuhia, Milki, Rajpur, Nibi, Mohomadpur ... ... 0 0 6 13 5 Bagachhara ... ... 0 0 6 13 5 Sikara ... ... 0 1 0 0 0 Rampur ... ... 0 1 0 0 0 Kundwa ... ... 0 7 0 0 0 Dewani ... ... 0 1 6 13 5 Somaria ... ... 0 1 0 0 0 Piparia ... ... 1 6 0 0 0 Chintamanpur ... ... 0 3 5 5 0 Saraila ... ... 0 3 6 13 5 Karaunsi ... ... 0 9 0 0 0 Khata No. 66— As. Rampur ... ... 6 Somaria ... ... 6 Ijmal— As. P. K. M. D. Amaon, Sahe Bahe, Aailai Patna, Aaila Khurd ... ... 0 1 13 6 10 Bararhi Baheri ... 0 5 0 0 0 Piparia ... ... 3 0 0 0 0 Dewani ... ... 0 6 13 6 10 Rampur ... ... 0 5 0 0 0 Sirihara, Bagachhara, Rajpur, Milki, Nibi, Bharuhia and Mohomadpur ... ... 0 1 13 6 10 Sarai Dharhar ... ... 0 6 13 6 10 Sikandarpur ... ... 0 0 1 13 5 Sikara ... ... 0 0 5 0 0 Simaria ... ... 0 0 5 0 0 Surhia ... ... 0 0 5 0 0 Karanpura ... ... 0 11 5 0 0 Garahand ... ... 0 5 0 0 0 Khaysanda ... ... 0 3 6 13 5 Gangapur ... ... 0 0 1 13 5 Mehia ... ... 0 5 0 0 0 Ismailpur ... ... 4 7 19 13 5 Amaraha ... ... 2 11 0 0 0 Anantpur Khilopur ... 0 5 0 0 0 Bhadoura ... ... 0 0 1 13 5 Nati ... ... 1 0 9 16 0 Pipra Sakarwar ... 1 3 0 0 0 Pakarihar ... ... 3 2 19 1 10 Jamurni ... ... 0 4 3 6 10 Chauthi ... ... 2 11 0 0 0 Chintamanpur ... ... 1 4 6 0 15 Dasaunti ... ... 0 4 3 6 10 Dandwa Viran ... 4 7 19 13 5 Rampur Bareju ... 2 11 0 0 0 Saraila ... ... 3 5 13 6 10 Siardanr ... ... 4 8 0 0 0 Silari ... ... 1 8 3 9 2 Kulharia ... ... 1 0 10 0 0 Kohari ... ... 1 3 0 0 0 Karaunsi ... ... 3 9 0 0 0 Kundwa ... ... 2 11 0 0 0 Nausan Bijai ... 0 1 6 13 5 Dighi ... ... 0 1 0 0 0 Lahopokar 0 1 0 0 0		Rs. A. P.	Rs. A. P.	Rs. A. P.
2075 24, 66, 67, 68 and 70	Amaon, pargana Chainpur.	11,361 13 6		The shares of Khata No. 24 are to be sold, runs thus :— Four annas in Aailai Patna, Lahopokar, Dighi and 1*a.* 10*p.* 10*k.* in Silathua and 2*a.* in each of the villages Ismailpur, Amaon, Amaraha, Anantpur Khilopur, Aailai Khurd, Bararhi, Baheri, Piparia, Bhadoura, Pipra Sakarwar, Pakarihar, Jamurni, Chauthi, Chak Koloundi *alias* Chakia, Chintamanpoor, Dasaunti, Dewane, Dandwa Viran, Rampur, Rampur Bareju, Sahe Bahe, Sirihara Bagachhara, Rajpur, Milki, Nibi, Bharuhia, Mohomadpur, Saralla, Sarai Dharhand, Sikandarpur, Sikara, Somaria, Surhia, Silari, Karanpura, Kulharia, Goraband, Kohari, Karaunsi, Kundwa, Kharsanda, Gangapur, Mehia, and Siardanr. Khata No. 66— P. K. Silathua ... ... 1 10 Khata No. 67— Aailai Patna, 1*a.*, Dighi 1*a.*, Lahopokar 1*a.*	Lachhmi Chand *alias* Raja Lal and others. Abdul Rahman and others. Mosst. Daropati Bibi *alias* Beslati Bibi, widow of Bimaldas. Permeshar Dyal Singh and others. Sitaram and others.	1,435 10 5 9 11 0 56 13 9 18 15 0 73 7 7	.....	109 15 6

Tauzi No.	Name of mahal or pargana.	Sadar jama of the whole estate.	Whether the whole estate is to be sold.	If only a share is to be sold, specification of such share or shares.	Names of proprietors of property to be sold.	If only a share is to be sold, the sadar jama of such share.	If the whole estate is to be sold, the arrears due from it.	If only a share is to be sold, the arrears due from it.
1	2	3	4	5	6	7	8	9
		Rs. A. P.				Rs. A. P.	Rs. A. P.	Rs. A. P.
2075 24, 66, 67, 68 and 70	Amaon, pargana Chainpur.	.....	.....	Khata No. 68— Nana Bijai 2a. 6k. 13m. 5d. It may be noted here that this khata No. 68 has been opened for 2a. from khata No. 24 and for 6k. 13m. 5d. from Ijmal. Khata No. 70— Nati 2a. 5p. 6k. 14m. It may be noted here that this khata No. 70 has been opened for 2a. from khata No. 24, for 1p. 10k. from khata No. 21 and for 5p. 16k. 14m. from Ijmal. *Vide* tauzi No. 2075/21 for the shares excluded from sale.				
2249	Bharari, pargana Chainpur.	750 0 0	Whole ...	.....	Mandildas and others.	.....	164 8 0	.....
2620 Jt.	Karari, pargana Chainpur.	1,080 10 8	.....	The Ijmali shares to be sold are as follows:— As. Auraiya Deo ... ... 16 Naroura ... ... 16 Ojhwalia ... ... 16 The share of Khata No. 1 in Karari 16a. is excluded from sale.	R. Sant Prasad	530 2 2	.....	193 5 2
2908 Jt.	Umapur, pargana Chainpur.	5,942 6 4	.....	The ijmali share to be sold are:— As. P. K. Patti Lohang ... ... 5 6 10 Sarisan ... ... 8 6 0 Chak Bhagwat ... ... 8 0 0 Umapur ... ... 1 3 0 Semaria ... ... 8 0 0 Harkaiya ... ... 8 0 0 Sahjni ... ... 4 3 0 Chandrauli ... ... 16 0 0 Chaukhanda ... . 16 0 0 Kutbanpur ... ... 8 0 0 Doharpat Sarawa ... ... 8 0 0 Saria Belbhadarpur ... 3 9 0 Kishunpura ... ... 6 3 0 The following shares are excluded from sale:— Khata No. 1— As. P. K. Semaria ... ... 8 0 0 Khata No. 2— Rampur ... ... 7 4 0 Khata No. 3— Umapur ... ... 1 6 0 Saria Belbhadarpur ... 1 6 0 Khata No. 4— Umapur ... ... 8 0 0 Khata No. 5— Saria Belbhadarpur ... 3 9 0 Khata No. 6— Samahuta Narainpur ... 4 0 0 Khata No. 7— Sariaun ... ... 7 6 0 Khata No. 8— Patti Lahang ... ... 1 6 0 Saria Belbhadarpur ... 0 3 0 Umapur ... ... 0 3 0 Khata No. 9— Garra ... ... 16 0 0 Mirga ... ... 16 0 0 Khata No. 10— Rampur ... ... 4 0 0 Khata No. 11— Rampur ... ... 4 8 0 Khata No. 12— Patti Lahang ... ... 0 9 0 Satwabishopur ... ... 4 0 0 Khata No. 13— Saria Belbhadarpur ... ... 2 6 0 Umapur ... ... 3 6 0 Khata No. 14— Kishunpura ... ... 5 0 0 Khata No. 15— Karmahari ... ... 4 0 0 Murarpati ... ... 4 0 0 Khata No. 16— Umapur, Saria Belbhadarpur 2 6 0	Ramdeni Rai and others.	526 8 4	....	147 10 3

Tauzi No.	Name of mahal or pargana.	Sadar jama of the whole estate.	Whether the whole estate is to be sold.	If only a share is to be sold, specification of such share or shares.	Names of proprietors of property to be sold.	If only a share is to be sold, the sadar jama of such share.	If the whole estate is to be sold, the arrears due from it.	If only a share is to be sold, the arrears due from it.
1	2	3	4	5	6	7	8	9
		Rs. A. P.				Rs. A. P.	Rs. A. P.	Rs. A. P.
2908 Jt.	Umapur, pargana Chainpur.	5,942 6 4	.....	Khata No. 17— As. P. K. Sahijni ... ... 8 0 0 Turkaulia ... ... 16 0 0 Karmahri ... . 8 0 0 Ghataya Jagatpur ... ... 16 0 0 Kildin ... ... 14 0 0 Harkataya .. .. 8 0 0 Bahera ... ... 16 0 0 Pattimurar ... ... 8 0 0 Semri Bahuan ... ... 16 0 0 Dohar Panserwa ... ... 8 0 0 Bhelma ... ... 16 0 0 Kutbanpur ... ... 8 0 0 Ghaghia ... ... 16 0 0 Tekari ... ... 16 0 0 Khata No. 18— Damadarpur ... . 16 0 0 Kilndi ... ... 2 0 0 Chak Bhagwat ... ... 8 0 0 Khata No. 19— Saria Belbhadarpur ... ... 2 3 0 Khata No. 20— Karmahari ... ... 4 0 0 Murarpatti ... ... 4 0 0 Khata No. 21— Sahijni ... . 3 9 0 Khata No. 22— Kasthar ... ... 16 0 0 Khata No. 23— Satwa Bishopur ... ... 6 4 0 Khata No. 24— Kishunpura ... ... 1 3 0 Khata No 25— Kishunpura .. .. 1 0 0 Khata No. 26— Kishunpura ... ... 0 6 0 Khata No. 27— Samahuta Narainpur ... 8 0 0 Khata No. 28— Samahuta Narainpur ... 4 0 0 Khata No. 29— Kishunpura ... ... 2 0 0 Khata No. 30— Lahangpatti ... ... 7 5 10 Khata No. 31— Satwa Bishopur ... ... 1 8 0 Khata No. 32— Satwa Bishopur ... ... 4 0 0 Lahanspatti ... ... 0 9 0 Saria Belbhadarpur ... ... 0 6 0 Khata No. 33— Ahinaura 16 0 0				
5989 / 1	Telari, pargana Sasaram.	801 1 1	.....	The share of khata No. 1 to be sold is 16 annas in Telari and Phulwaria. The share of Ijmal and khata No. 2 will also be sold. The share of khata No. 3, 7 annas, is excluded from sale.	Brijmohan La. and others.	534 3 4	.....	18 6 5
8196	Towfir, Makdumpur Semra, pargana Baraligawan.	5,672 6 3	Whole ...	.....	Ram Rajendra Deonarain.	.....	10,308 12 10	.....
9852	Banarpur, pargana Chousa.	540 2 11	Do. ...	.....	Santram Tewari and others.	.....	4 1 9	.....

Arrah, the 6th May 1905.

G. MILNE, Offg. Collector.

Notification A.

NOTICE is hereby given, under sections 6 and 13, Act XI of 1859, that the undermentioned estates and shares of estates in the district of Khulna will be put up for sale at the office of the Collector of that district on the 22nd June 1905 at 12 A.M. for arrears of revenue and other demands which by law are realizable as arrears of land revenue.

When in columns 5, 7 and 9 of the appended statement it is stated that only a share is to be sold, it is to be understood that a separate account is kept for that share.

Tauzi No.	Name of mahal and pargana.	Sadar jama of whole estate.	Whether the whole estate is to be sold.	If only a share is to be sold, specification of such share or shares.	Names of proprietors of property to be sold.	If only a share is to be sold, the sadar jama of such share.	If the whole estate is to be sold, the arrears due from it.	If only a share is to be sold, the arrears due from it.
1	2	3	4	5	6	7	8	9
96-3	Punilor, pargana Buran	Rs. A. P. 5,651 9 3 Police revenue— 67 3 2	No ...	As. G. KR. KT. 5 6 2 2 ... ... All other shares than that specified will be excluded from the sale.	Jadu Nath Ray Chaudhury and others.	Rs. A. P. 1,663 13 9 Police revenue— 22 6 5	Rs. A. P.	Rs. A. P. 193 3 10 Police revenue— 1 13 4
170-2	Shilemabad, pargana Shilemabad.	5,784 6 6	No	As. G. 2 9 ... ... All other shares than that specified will be excluded from the sale.	Beni Bhusan Roy ...	636 11 9½	.....	176 7 9
1000	Lot No. 216, Jungle Khanda, howla No. 227, pargana Sundarbans.	2,599 0 0	The whole		Manik Chandra Dhali and others	.....	1,949 0 0	.....
891	Beralakhi, pargana Sundarbans.	563 0 0	Do.		Khetra Krishna Mitra	.....	382 0 0	.....

Khulna Collectorate, the 6th May 1905.

A. AHMAD, Collector.

Notification A of sale.

NOTICE is hereby given, under sections 6 and 13, Act XI of 1859, that the undermentioned estates and shares of estates in the district of Rangpur will be put up for sale at the office of the Collector of that district on the 22nd June 1905, at 12 noon, for arrears of revenue and other demands, which by law are realizable as arrears of land revenue.

Tauzi No.	Name of mahal and pargana.	Sadar jama of whole estate.	Whether the whole estate is to be sold.	If only a share is to be sold, specification of such share or shares.	Names of proprietors of property to be sold.	If only a share is to be sold, the sadar jama of such share.	If the whole estate is to be sold, the arrears due from it	If only a share is to be sold, the arrears due from it.
1	2	3	4	5	6	7	8	9
183	Kundi, pargana Kumiti, 7 annas.	Rs. A. P. 10,873 10 3	No ...	The separate account bearing No. 183-1 comprising 16 annas of each of the mauzas Barabari Raghu, Budha, Gobardhan, Ghose Raghab, Jayram, Lakshan Kismat chhota, Rajaram, Shaja Pukhari, Digultari, Kashichak, Khalia, Lalu Kismat, Sobandighi, Purandar Kashinathpur, and Khaleya kismat and 8 annas share of each of the mauzas Fatehpur, Gopinathpur, Jimahar, Krishnapur, Ranipur, Sripur alias Srichandra Barakali Jama and Khalia.	Nabin Kishori Chaudhurani and others.	Rs. A. P. 1,471 1 11	.....	Rs. A. P. 194 3

NOTE.—All other shares besides that specified will be excluded from the sale.

Rangpur, the 28th April 1905.

T. EMERSON, Collector.

Notification A.

NOTICE is hereby given, under sections 6 and 13, Act XI of 1859, that the undermentioned estates and shares of estates in the district of Saran will be put up for sale at the office of the Collector of that district on the 5th June 1905 at 6-30 A.M. (Monday), correspondng to 18th Jesth 1312 Fasli, for arrears of revenue and other demands, which by law are realisable as arrears of land revenue.

When in columns 5, 7 and 9 of the appended statement it is stated that only a share is to be sold, it is to be understood that a separate account is kept for that share.

Tauzi No.	Name of mahal and pargana.	Sadar jama of whole estate.	Whether the whole estate is to be sold.	If only a share is to be sold, specification of such share or shares.	Names of proprietors of property to be sold.	If only a share is to be sold, the sadar jama of such share.	If the whole estate is to be sold, the arrears due from it.	If only a share is to be sold, the arrears due from it.
1	2	3	4	5	6	7	8	9
		Rs. A. P.				Rs. A. P.	Rs. A. P.	Rs. A. P.
894	Benout, pargana Bal.	883 15 8	.....	Ijmali— As. Benout ... ... 8 Masihantola ... ... 8 Rampur .. .. 16 Birti Mehdar Bhodour . ... 8 All other shares besides those specified will be excluded from the sale.	Ramdim Pandey and others.	543 13 8	.. .	184 13 11
1216	Harihans, pargana Bara.	1,061 8 6	.....	Ijmali— Ar. P. K. M. D. Kharsanda .. ... 9 1 17 13 5 Fazilpur ... ... 8 0 0 0 0 Hindawol ... 16 0 0 0 0 Balli ... ... 10 8 0 0 0 Dhankhar .. .. 16 0 0 0 0 Harihans ... ... 16 0 0 0 0 Khanpur Kharanti ... 10 8 0 0 0 Sareya ... ... 10 8 0 0 0 All other shares besides those specified will be excluded from the sale.	Juthan Lall and others.	808 2 6	.....	48 8 0
				Part II.—Temporarily-settled estates.				
1896	Deara Khalpura Kamala, pargana Chirand.	536 0 0	Entire ...	.....	Parma Singh, on behalf of Rama Singh, sale purchaser.	.....	301 8 8	.....
				Part I.—Permanently-settled estates.				
2492	Kerwa Kotsa, pargana Goa.	3,124 8 8	.....	Ijmali— As. P. K. M. D. Rampur Atouli . ... 5 3 0 0 0 Siswa ... ... 5 4 4 3 5 Agahra ... . 9 2 5 0 0 Galimapur ... ... 8 6 7 10 0 Parsa .. . .. 6 1 10 0 0 Bajrahia ... . 7 10 10 0 0 Kolsa, Keshapur, Milki 7 3 10 15 0 Usri ... ... 1 0 3 15 0 Sareya Basaut ... ... 1 1 10 0 0 Faridpur .. .. 3 11 5 0 0 Chapra Mahesh .. ... 5 5 5 0 0 Dawan Godna ... ... 6 5 5 0 0 Fatehpur .. . ... 7 5 5 0 0 Akolhi ... ... 7 5 5 0 0 Chowrasi ... ... 7 5 5 0 0 Ardewa . ... 10 6 0 0 0 Ghurua ... ... 10 6 0 0 0 All other shares besides those mentioned will be excluded from sale.	Durga Prosad Singh and others.	864 13 2	.....	108 15 7
3718	Rasulpur, pargana Goa.	1,286 6 5	.....	Ijmali— As. P. K. M. D. KG. Kareya Hat ... 3 10 6 7 4 0 Semri .. .. 3 5 15 6 4 12 Khajuhota ... .. 16 0 0 0 0 0 Godhna Dowan ... 9 7 4 0 0 0 Dhanawa ... .. 9 2 1 18 0 0 Khanpur .. ... 16 0 0 0 0 0 Rasulpur ... ... 5 3 2 15 0 0 Rahimpur .. ... 5 3 2 15 0 0 Talwar ... ... 4 5 0 13 0 0 Datra Pursauni ... 16 0 0 0 0 0 Jalalpur ... ... 10 0 0 0 0 0 Besambherpur Gyosdih ... ... 12 4 6 13 5 0 Nogowa Bugrug ... 8 9 12 0 0 0 Rampur ... .. 10 0 0 0 0 0 Kochwara ... ... 10 1 9 7 5 0 Jugdishpur ... ... 7 8 6 3 3 0 Nagwa Khurd .. 8 9 12 0 0 0 Manpur... ... 10 0 0 0 0 0 Akbarpur ... . 16 0 0 0 0 0 Manjharia Jolkar 16 0 0 0 0 0 Kemari ... ... 16 0 0 0 0 0 Dhanamti, Sultanpur, Achalpur, Gagain, Jagdishpur 16 0 0 0 0 0 All other shares besides those mentioned will be excluded from sale.	Lil Baran Singh and others.	754 15 5	.....	49 14 8
[illegible]	Basaipur Kareya or Basaipur, pargana Koswar.	2,486 2 8	Entire ...		Rai Jagdish Prasad and others.	.....	399 15 4	.....

Tauzi No.	Name of mahal and pargana.	Sadar jama of whole estate.	Whether the whole estate is to be sold.	If only a share is to be sold, specification of such share or shares.	Names of proprietors of property to be sold.	If only a share is to be sold, the sadar jama of such share.	If the whole estate is to be sold, the arrears due from it.	If only a share is to be sold, the arrears due from it.
1	2	3	4	5	6	7	8	9
		Rs. A. P.		As. P.		Rs. A. P.	Rs. A. P.	Rs. A. P.
3308/58	Amnour Mander, pargana Makair.	7,433 10 8		Separate account No. 58— Dharlahi Abhiman ... ... 16 0 Chapra Abhiman ... ... 16 0 Bolha ... ... 16 0 Firospur ... ... 16 0 Paharpur ... ... 8 0 Sheikhpura ... ... 16 0 Patsarampur Gagendra 16 0 Mopronli ... ... 16 0 Kuddi Kharag ... ... 16 0 Parsa Harpur ... ... 8 0 Asarpur ... ... 8 0 Sultanpur ... ... 16 0 Bankerwa Bhav ... ... 16 0 Kuodi Asam ... ... 8 0 Kuodi Peer ... ... 8 0 Bhagwanpur ... ... 16 0 Hankarpatti ... ... 5 4 Homnpara ... ... 5 4 Rampur Anant ... ... 8 0 Yar Mahamadpur ... ... 16 0 Bodua ... ... 13 0 Mangarpol Naran ... 8 0 Khushalpur ... ... 13 0 Muzarchak ... ... 8 0 Bajahia ... ... 9 0 Ibrahimpur ... ... 16 0 Bhopatchak ... ... 8 0 Fakirchak ... ... 12 0 Mangarpal Murtaza ... ... 8 0 Karanpura ... ... 13 0 Jodopur ... ... 16 0 Kewatia ... ... 16 0 Rampur Jugdish ... ... 16 0 Maachitwa ... ... 16 0 Jugdishpur ... ... 16 0 Narsingh Bhanpur ... 16 0 Patti Mahamad or Mahamad Pati ... ... 16 0 Bajidpur ... ... 8 0 Khijirpur ... ... 16 0 Anjani ... ... 16 0 Patti Wali or Wali Patti ... 16 0 Itma ... ... 16 0 Bhnouta Makund ... ... 16 0 Patti Manjowna ... ... 5 4 Parsa Sahey ... ... 12 0 Bande Modsudan ... ... 16 0 Bak Sanda ... ... 16 0 Sarnoth Chak ... ... 16 0 Hariherpur Deonath ... 16 0 Pat Dhorlahi Fatu or Dokha Fatu ... ... 13 0 Molha Chak ... ... 6 0 Manikchak ... ... 12 0 Porai ... ... 16 0 Akilpur ... ... 16 0 Bhow Chand Chak ... ... 16 0 Garib Chak ... ... 16 0 Hunkraha ... ... 16 0 Bhasana ... ... 16 0 Dharam Chak ... ... 16 0 Koithanlia *alias* Bothhendi ... 16 0 Salempur ... ... 4 0 Kaithanlia ... ... 16 0 Jadurampur ... ... 8 0 Chak Saleb *alias* Saleb Chak ... 16 0 Pipra ... ... 16 0 Ishak Chak ... ... 8 0 Jugdish Chak ... ... 12 0 Dharlahi Bhimal or Dharlahi 16 0 Mohan Chak ... ... 16 0 Chand Chak ... ... 16 0 Koila ... ... 16 0 Mudahi ... ... 1 0 All other shares besides those specified will be excluded from sale.	Raj Rajeshwari Kumar Singh.	2,211 9 10		1,011 6 6
5544	Nurhan Tole Babu Debi Prosad, pargana Nurhan.	1,209 7 6	Entire ...		Babu Debi Prosad, Babu Kosila Nand and Babu Gulab Chand and others.		305 9 4	

BRAHMESHWAR PRASAD, *for* Collector.

Saran Collectorate, the May 1905.

Notification A.

NOTICE is hereby given, under sections 6 and 13, Act XI of 1859, that the undermentioned estates and shares of estates in the district of Patna will be put up for sale at the office of the Collector of that district on the 6th June 1905 at 10 A.M. for arrears of revenue and other demands which by law are realizable as arrears of land revenue.

When in columns 5, 7 and 9 of the appended statement it is stated that only a share is to be sold, it is to be understood that a separate account is kept for that share.

Tauzi No.	Name of mahal and pargana.	Sadar jama of whole estate.	Whether the whole estate is to be sold.	If only a share is to be sold, specification of such share or shares.	Names of proprietors of property to be sold.	If only a share is to be sold, the sadar jama of such share.	If the whole estate is to be sold, the arrears due from it.	If only a share is to be sold, the arrears due from it.
1	2	3	4	5	6	7	8	9
		Rs. A. P.				Rs A. P.	Rs. A. P.	Rs A. P.
6	Bahadurpur, pargana Bhimpur.	1,103 13 0	Entire	.....	Ram Narayan Singh Vogaira.	....	344 13 0	..
11	Bedhna Lashkaripur Buzurg Nisf, pargana Bhimpur.	1,038 0 0	Do	..	Babu Bishun Prosad Vogaira		130 0 0	
53 1	Bauri, pargana Teladha	1,066 10 8		8 annas, separate account ... All other shares than that specified will be excluded from the sale.	Mussammat Ummul Kubra, herself and guardian of Khairunnissa, minor.	533 5 4	.....	266 10 8
382	Deara Danapur Shahzadpur, pargana Phulwari.	3,393 0 0	Entire	... .	Habib Khan, Gulab Chand Lal, Mahabir Sahu Vogaira.	..	3,531 5 2	.....
384 1	Narayanpur Amnar, pargana Teladha.	2,241 1 1		4 annas, separate account All other shares than that specified will be excluded from the sale.	Mussammat Kanchan Kuer, mother and guardian of Deo Nandan Prosad Singh.	560 4 4	....	280 2 9
395	Gauspur Karwa, pargana Sanda.	640 8 7	Entire ...	.....	Lalji Singh ...	....	6 11 4	.....
400	Ram Nagar Deara Mandarja, tauzi Deara Ram Nagar, pargana Ghyaspur	2,133 5 4		9 annas and 16 dams, ijmal ... All other shares than that specified will be excluded from the sale	Syed Mohamed Mehdi Hasan Khan, *alias* Padshah Nawab, Syed Akbar Ali Khan, *alias* Chhote Nawab Vogaira.	1,066 11 8	.....	114 5 2
417	Serranda Afzalpur Saranda, pargana Teladha.	816 0 0	Entire ...	. ..	Syed Amir Kasim Vogaira.	.....	202 10 9	.....

The 8th May 1905.

H. C. WOODMAN, Collector of Patna.

Notification A.

NOTICE is hereby given, under sections 6 and 13, Act XI of 1859, that the undermentioned estates and shares of estates in the district of Bankura, will be put up for sale at the office of the Collector of that district on the 31th June at 12 A.M. for arrears of revenue and other demands, which by law are realisable as arrears of land revenue.

When in columns 5, 7 and 9 of the appended statement it is stated that only a share is to be sold, it is to be understood that a separate account is kept for that share

Tauzi No.	Name of mahal and pargana.	Sadar jama of whole estate.	Whether the whole estate is to be sold.	If only a share is to be sold, specification of such share or shares.	Names of proprietors of property to be sold.	If only a share is to be sold, the sadar jama of such share.	If the whole estate is to be sold, the arrears due from it.	If only a share is to be sold, the arrears due from it.
1	2	3	4	5	6	7	8	9
5 Residuary.	Kuchukole ...	Rs. A. P. 8,236 7 9	The whole estate will not be sold.	2a. 12g. 2k. 1kr. 18til share of the estate. All other shares besides that specified will be excluded from the sale.	Chandra Kumari Debya.	Rs. A. P. 1,278 11 6	Rs. A. P.	Rs. A. P. 641 6 9

R. KRISHNA DEB, Collector.

Bankura Collectorate, the 13th May 1905

Supplementary Notification A.

NOTICE is hereby given under sections 6 and 13, Act XI of 1859, that the undermentioned estates and shares of estates in the district of Gaya will be put up for sale at the Office of the Collector of that district on the 5th June 1905, at 6 A.M., for arrears of revenue and other demands, which by law are realizable as arrears of land revenue:—

When in columns 5, 7 and 9 of the appended statement it is stated that only a share is to be sold, it is to be understood that a separate account is kept for that share.

Tauzi No.	Name of mahal and pargana.	Sadar jama of whole estate.	Whether the whole estate is to be sold.	If only a share is to be sold, specification of such share or shares.	Names of proprietors of property to be sold.	If only a share is to be sold, the sadar jama of such share.	If the whole estate is to be sold, the arrears due from it.	If only a share is to be sold, the arrears due from it.
1	2	3	4	5	6	7	8	9
1417	Barorah Vagal-rah, pargana Charkawan.	Rs. A. P. 2,354 2 0	Nil	Separate account No. 8 consisting of— As. P. (1) Qasichak ... ... 9 4 (2) Mahmoodchak ... ... 9 4 (3) Jhaggarbigha ... ... 9 4 (4) Mohituli Bigha ... ... 9 4 (5) Salempore *alias* Rampore ... ... 9 4 (6) Chobra ... ... 9 4 (7) Bargaon 9 4	Mahammad Taqi and others.	Rs. A. P. 950 0 0	Nil	Rs. A. P. 12 8 6

Gaya Collectorate, the 12th May 1905.

SHAMSHUDDIN HAIDER, Deputy Collector.

Notification A.

NOTICE is hereby given under sections 6 and 13, Act XI of 1859, that the undermentioned estates and shares of estates in the district of Dacca will be put up for sale at the office of the Collector of that district on the 23rd June 1905 at 12 o'clock noon for arrears of revenue and other demands, which by law are realizable as arrears of land revenue:—

When in columns 5, 7 and 9 of the appended statement it is stated that only a share is to be sold, it is to be understood that a separate account is kept for that share, and that the other share or shares in the estate are excluded from the sale.

Tauzi No.	Name of mahal and pargana.	Sadar jama of whole estate.	Whether the whole estate is to be sold.	If only a share is to be sold, specification of such share or shares.	Names of proprietors of property to be sold.	If only a share is to be sold, the sadar jama of such share.	If the whole estate is to be sold, the arrears due from it.	If only a share is to be sold, the arrears due from it.
1	2	3	4	5	6	7	8	9
		Rs. A. P.		Residue— As. kds. kr. kt.		Rs. A. P.		Rs. A. P.
275	Pargana Talipabad, Siv Prosad.	1,146 10 7½		15 6 2 3	Jasoda Lal Roy and others.	935 8 10½	.....	14 10 8
846	Pargana Rokanpur, Tapse Bowkanda John Hollo.	3,078 6 7½	... .	Residue— 9 13 1 1	Ditto	1,860 0 5	.....	139 6 9
2906	Pargana Ran Bhowal Mirali Haidar.	1,128 5 0	...	Residue	Maharaja Surja Kant Acherjee and others.	618 4 4	.....	13 3 11½

MOHENDRA CHUNDER MOZUMDAR, Deputy Collector in charge.

Dacca Collectorate, the 12th May 1905.

Notice.

NOTICE is hereby given, under sections 6 and 13 of Act XI of 1859, that the undermentioned estate and share of estate in the district of the 24 Parganas will be put up for sale at the office of the Collector of that district on the 14th June 1905, at 12 o'clock noon, for arrears of revenue and other demands which by law are realised as arrears of land revenue.

When in columns 5, 7 and 9 of the appended statement it is stated that only a share is to be sold, it is understood that a separate account is kept for that share and that the share or shares are excluded from sale.

Consecutive number.	Tauzi No.	Name of pargana and mahal.	Sadar jama for the whole estate.	Whether the whole estate is to be sold.	If only a share is to be sold, the specification of such share.	Names of proprietors of properties to be sold.	If only a share is to be sold, the sadar jama of such share.	If the whole is to be sold, the arrears due from it.	If only a share is to be sold, the arrears due from it.
1	2	3	4	5	6	7	8	9	10
1	382/1	Anmabad, hismat Hudajoy-Chandi-pore.	Rs. A. P. 6,213 7 6	.....	Excluding 12as. share, remaining 4as. share.	Radhal inode Mondal and others.	Rs. A. P 2,078 5 11	... .	Rs. A. P. 711 1 9½

Alipore, the 8th May 1905.

BHUPATI CHAKRAVARTTI, *for* Collector.

Advertisement of Sale.

NOTICE is hereby given that the undermentioned plots of land, no longer required by Government, situated along the South Behar Section Railway, in the district of Monghyr, will be put up to sale at 10 o'clock on the 8th day of July 1905, corresponding with the 21st Asarh 1312 Fusli, at Barhi, village Indupur.

The purchasers of the several plots of land will be subject to the following conditions:—

1st.—The purchasers will have no power to make any excavations on the land nearer than 15 feet from the railway fencing, or plough the land closer than 3 feet from its foundation.

2nd.—If the amount of purchase-money does not exceed Rs. 100, the whole amount must be paid down at once.

3rd.—If the amount of purchase-money exceed Rs. 100, one-fourth of the amount must be immediately deposited. If the balance be not paid by noon of the fifteenth day after the sale, reckoning the day of sale as one, or if that day be a close holiday, then by noon of the first succeeding office day, the sale shall be cancelled, the sum deposited being forfeited to Government, and the lot again put up for sale at the risk of the defaulting purchaser, after issue of advertisement as in the case of original sale.

4th.—The plots of land will be sold revenue-free to the highest bidders.

5th.—The purchasers shall be put in possession on receipt by the Collector of the orders of the Board confirming the sale.

Consecutive lot number.	Name of district.	Pargana and mauza.	Number of mile on which land is situate.	Situated on which side of the railway.	Approximate area of lot in bighas and in acres. B. K. C.	Approximate area of lot in bighas and in acres. A. R. P.	Land excluded from sale from each lot. Reasons for exclusion.	Land excluded from sale from each lot. A. R. P.	Commencement and termination of lot.	Boundary of lot.
1	2	3	4	5	6		7		8	9
1	Monghyr	Indupur, pargana Salemabad.	.....	South of the railway line running from Howrah to Dehli.	3 17 15½	3 1 16·533	...	....	From 1 to 4.	*North*—Orchards belonging to Kali Singh, Chulha Dusadh, Muso Singh in Barhi and lots of Jagdeo Singh in relinquished B class land. *South*—Waste land and relinquished B class lands. *East*—Waste land. *West*—Railway fencing.
2	Ditto ...	Ditto ..	.	Ditto ...	3 1 4½					
3	Ditto ...	Ditto ...	.....	Ditto ...	0 15 0					
4	Ditto .	Ditto ..	.....	Ditto ...	2 8 16½					
					10 2 16·½					

Monghyr, the 9th May 1905.

U. GUHA, *for* Collector.

Advertisement of Sale.

NOTICE is hereby given that the undermentioned plots of land, no longer required by Government, situated along the Nirmali Station of the Tirhut State Railway, in the district of Bhagalpur, will be put up to sale at 11 o'clock on the 30th June 1905, corresponding to 13th of Assar Fasli 1312 at Supaul Katchery, district Bhagalpur.

The purchasers of the several plots of land will be subject to the following conditions:—

1st.—The purchasers will have no power to make any excavations on the land nearer than 15 feet from the railway boundary, or to plough the land closer than 3 feet from its foundation.

2nd.—If the amount of purchase-money does not exceed Rs. 100, the whole amount must be paid down at once.

3rd.—If the amount of purchase-money exceed Rs. 100, one-fourth of the amount must be immediately deposited. If the balance be not paid by the noon of the fifteenth day after the sale, reckoning the day of sale as one, or if that day be a close holiday, then by noon of the first succeeding office day, the sale shall be cancelled, the sum deposited being forfeited to Government, and the lot again put up for sale at the risk of the defaulting purchaser, after issue of advertisement, as in the case of original sale.

4th.—The plots of land will be sold revenue-free to the highest bidder.

5th.—The purchasers shall be put in possession on receipt by the Collector of the orders of the Board confirming the sale.

Consecutive lot No.	Name of district.	Pargana and mauza.	Number of mile on which land is situate.	Situated on which side of the railway.	Approximate area of lot in bighas and in acres. B. K. C.	Approximate area of lot in bighas and in acres. A. R. P.	Land excluded from sale from each lot. Reasons for exclusion.	Land excluded from sale from each lot. A. R. P.	Commencement and termination of lot.	Boundary of lot.
45, 46, 47, 48, 49, 50, 51, 52, 53, 54, 55, 56, 57, 58, 59, 60, 61, 62 to 67, 69 to 114, 116 to 121, 125 to 128, 132, 133, 138, 140 and 141.	Bhagalpur	Mauza Nirmali, pargana Naredigar.	67	North ...	44 7 8 (Standard).	14·67 0 0	.....	.....	..	*North*—Mauza Nirmali. *South*—Land in possession of the railway. *East*—Road to Nirmali. *West*—Mauza Nirmali.

Bhagalpur, the 16th May 1905.

H. COUPLAND, Collector of Bhagalpur.

Advertisement of Sale.

NOTICE is hereby given that the undermentioned plots of land, no longer required by Government, situated along the Hajipur-Katihar Extension Railway, in the district of Monghyr, will be put up to sale at 10 o'clock on 8th day of July 1905, corresponding to the 21st Asarh 1312 Fasli, at Mohanpur, pargana Naipur.

The purchasers of the several plots of land will be subject to the following conditions:—

1st.—The purchasers will have no power to make any excavations on the land nearer than fifteen feet from the railway fencing, or plough the land closer than three feet from its foundation.

2nd.—If the amount of purchase-money does not exceed Rs. 100, the whole amount must be paid down at once.

3rd.—If the amount of purchase-money exceeds Rs. 100, one-fourth of the amount must be immediately deposited. If the balance be not paid by noon of the fifteenth day after the sale, reckoning the day of sale as one, or if that day be a close holiday, then by noon of the first succeeding office day, the sale shall be cancelled, the sum deposited being forfeited to Government, and the lot again put up for sale at the risk of the defaulting purchaser, after issue of advertisement, as in the case of original sale.

4th.—The plots of land will be sold revenue-free to the highest bidders.

5th.—The purchasers shall be put in possession on receipt by the Collector of the orders of the Board confirming the sale.

Consecutive lot No.	Name of district.	Parvana and mauza.	Number of mile on which land is situate.	Situated on which side of the railway.	Approximate area of lot in bighas and in acres.		Land excluded from sale from each lot.		Commencement and termination of lot.	Boundary of lot.
					B. K. C.	A. R. P.	Reasons for exclusion.	A. R. P.		
1	2	3	4	5	6		7		8	9
1	Monghyr	Mohanpur, pargana Naipur.	2 of the Hajipur-Katihar extension.	North ...	0 5 11	.....	.....	....	From 1 to 3 ...	*North*—Girja Chaudhry's land. *South*,—Waste land. *East*,—Railway fencing. *West*,—Alkhu Chaudhry's land.
2	Ditto ...	Ditto ...	Ditto ...	Do. ..	0 5 6	.....	.....	.. ...	.....	*North*,—Girja Chaudhry's land. *South*,—Railway fencing. *East*,—Railway fencing. *West*,—Girja Chaudhry's land.
	Ditto ...	Ditto ...	Ditto ...	Do. ...	0 0 12	.....	.....	.....	.....	*North*,—Girja Chaudhury's land. *South*,—Railway fencing. *East*,—Railway fencing. *West*,—Girja Chaudhury's land.

Monghyr, the 9th May 1905.

UMA PRASANNA GUHA, *for* Collector.

Notification A.

NOTICE is hereby given, under sections 6 and 13, Act XI of 1859, that the undermentioned estates and shares of estates in the district of Purnea will be put up for sale at the office of the Collector of that district on the 27th June 1905 at 12 o'clock noon, for arrears of revenue and other demands, which by law are realizable as arrears of land revenue.

When in columns 5, 7 and 9 of the appended statement it is stated that only a share is to be sold, it is to be understood that a separate account is kept for that share.

Touzi No.	Name of mahal and pargana.	Sadar jama of whole estate.	Whether the whole estate is to be sold.	If only a share is to be sold, specification of such share or shares.	Names of proprietors of property to be sold.	If only a share is to be sold, the sadar jama of such share.	If the whole estate is to be sold, the arrears due from it.	If only a share is to be sold, the arrears due from it.
1	2	3	4	5	6	7	8	9
3178	Nisf pargana Katihar, pargana Katihar.	Rs. A. P. 5,458 1 8½	Whole ...	... .	Bibi Fulkumari of Murshidabad.	... ..	Rs. A. P. Land Revenue 3,052 10 7 Road Cess ... 621 11 6 Dák cess .. 30 2 6 Total ... 3,704 8 7	.....

Purnea, the 17th May 1905.

J. H. LEA, Collector.

Notification A.

NOTICE is hereby given, under sections 6 and 13, Act XI of 1859, that the undermentioned estates and shares of estates in the district of Nadia will be put up for sale at the office of the Collector of that district on the 23rd June at 12 noon, for arrears of revenue and other demands, which by law are realisable as arrears of land revenue.

When in columns 5, 7 and 9 of the appended statement it is stated that only a share is to be sold, it is to be understood that a separate account is kept for that share, and that the other share or shares in the estate are excluded from the sale.

Tauzi No.	Name of mahal and pargana.	Sadar jama of whole estate.	Whether the whole estate is to be sold.	If only a share is to be sold, specification of such share or shares.	Names of proprietors of property to be sold.	If only a share is to be sold, the sadar jama of such share.	If the whole estate is to be sold, the arrears due from it.	If only a share is to be sold, the arrears due from it.
1	2	3	4	5	6	7	8	9
		Rs. A. P.				Rs. A. P.	Rs. A. P.	Rs. A. P.
266	Jagadanandpur, pargana Bagowan.	955 14 11	Whole ...	.....	Jotindra Nath Ray ...	.....	2 10 2	.....
61	Balia, pargana Plassy ...	5,631 0 9	.....	1a. 13g. 1c. 3d. (separate account No. 61-1).	Dub Mohini Dasi and others.	586 9 1	....	49 10 3
61	Ditto, ditto ...	5,631 0 9	.....	16g. 2c. 6d. (separate account No. 61-4).	Ditto ditto ..	293 4 7	.....	3 7 5
			Total ...	2a. 10g.				
				The other shares, viz., 13a. 10g., will be excluded from the sale.				
213	Gopalpur, pargana Shahanjial.	2,176 0 5	.....	11a. 15g. 2c. 2kg. (separate account No. 213-0).	Panchanan Mazumdar, self and guardian on behalf of Lalit Mohan Mazumdar.	1,602 4 3		1 10 2
				The other share, viz., 4a. 4g. 1c. 2kg., will be excluded from the sale.				
3327	Pakuria, pargana Taragonia.	777 6 0	.....	5a. 13g. 3c. 1d. (residue) ...	Bama Charan Choudhury.	728 6 4	.....	3 6 2
				The other shares, viz., 10a 6g. 2kg. 2d., will be excluded from the sale.				
840	Chur Kaipal, pargana Shahanjial.	1,390 0 0	Whole ...	.....	Monmohan Ray, self and guardian for Kedar Nath Ray.	.....	1 5 5	.....

Nadia Collectorate, the 20th May 1905.

R. S. GREENSHIELDS, Collector.

Notification A.

NOTICE is hereby given, under sections 6 and 13, Act XI of 1859, that the undermentioned estates and shares of estates in the district of Purnea will be put up for sale at the office of the Collector of that district on the 29th of June 1905 at 12 o'clock noon for arrears of revenue and other demands, which by law are realisable as arrears of land revenue.

When in columns 5, 7 and 9 of the appended statement it is stated that only a share is to be sold, it is to be understood that a separate account is kept for that share and that the other share or shares in the estate are excluded from the sale.

Tauzi No.	Name of mahal and pargana.	Sadar jama of the whole estate.	Whether the whole estate is to be sold.	If only a share is to be sold, specification of such share or shares.	Names of proprietors of property to be sold.	If only a share is to be sold, the sadar jama of such share.	If the whole estate is to be sold, the arrears due from it.	If only a share is to be sold, the arrears due from it.
1	2	3	4	5	6	7	8	9
		Rs. A. P.				Rs. A. P.		Rs. A. P.
7/2	Surjapur, pargana Surjapur.	2,36,682 13 2	No ...	4 gandas 2 cowris 1 krant ½ dan*. All other shares than that specified will be excluded from the sale.	Syed Asghar Reza Khan Bahadur of Kishanganj.	3,595 1 11½	.....	Land Revenue, 2,498 4 11½ Road Cess .. 219 8 3 Total ... 2,717 13 2½

Purnea, the 17th May 1905.

J. H. LEA, Collector.

Notification A.

NOTICE is hereby given, under sections 6 and 13, Act XI of 1859, that the undermentioned estates and shares of estates in the district of Midnapore will be put up for sale at the office of the Collector of that district on the 27th June 1905 at 12 o'clock for arrears of revenue and other demands which by law are realizable as arrears of land revenue.

When in columns 5, 7 and 9 of the appended statement it is stated that only a share is to be sold, it is to be understood that a separate account is kept for that share

Tauzi No.	Name of mahal and pargana.	Sadar jama of whole estate.	Whether the whole estate is to be sold.	If only a share is to be sold, specification of such share or shares.	Names of proprietors of property to be sold.	If only a share is to be sold, the sadar jama of such share.	If the whole estate is to be sold, the arrears due from it.	If only a share is to be sold, the arrears due from it.
1	2	3	4	5	6	7	8	9
		Rs. A. P.				Rs. A. P.	Rs. A. P.	Rs. A. P.
275	Pargana tappa Calisita, mahal Sitovebinode, 4 annas' share	1,658 14 9		Residuary share, excluding separate account No. I—10a. 13g. 1k. 1kt. share of the mahal. All other shares than that specified will be excluded from sale.	Chowdry Gopendra Nundan Das Mahapatra.	1,105 15 3	.....	518 3 0
312	Pargana Batitaki, mahal Palgeria.	630 1 7	Entire ...	.. ..	Mohendra Nath Pal, sabait of Lukshmi Janardan Jew.		290 7 0	...
380	Pargana Bhuniamutta, mahal Haripore *alias* Banamalipore.	920 13 8	.	Residuary share, excluding separate account No. I—15a. 4g. share of the mahal. All other shares than that specified above will be excluded from sale.	Kripasindoo Masanta and others.	874 12 8	...	372 0 0
535	Pargana Chetna, mahal Dubrajpore.	3,408 10 1	...	Separate account No. I—8a. share of the mahal. All other shares than that specified above will be excluded from sale.	Sreemati Mangala Dasi and others.	1,704 4 11	... ..	356 13 8
535	Ditto ...	3,408 10 1	.....	Separate account No. III—3a. share of the mahal. All other shares than that specified above will be excluded from sale.	Jotindra Nath Sing and others	630 1 11	.....	219 11 10
558	Pargana Dakhinmal, mahal Haripore.	6,769 1 5	... .	Separate account No. II—8a. share of the mahal. All other shares than that specified will be excluded from sale.	Haripriya Debi	3,384 5 9		1,480 8 3
730	Pargana Eqrachore, mahal Bhatda.	3,613 6 4	... ..	Residuary share, excluding separate accounts Nos 3, 4, and 10 to 24— As. G. K. KT. Mauza Baria *alias* Jharia ... 16 0 0 0 M. Gopinathpore 16 0 0 0 M. Karakpara ... 16 0 0 0 M. Miregapore ... 16 0 0 0 M Naraharipore 16 0 0 0 M. Sundarpore 16 0 0 0 M. Malikpore ... 0 3½ 0 0 M. Mahanagpre 0 3½ 0 0 M. Jagannathpore ... 5 6 2 2 As. G. KG. TIL. M. Kamardiha .. 3 9 9 15 K. M. Dabeta *alias* kist Dambeta 1 15 2 18 KG M Nobipore ... 9 11 6 14 M. Tetulmari ... 12 0 0 0 M Bhatda. ... 8 11 6 3 1 s c. M Gonipore ... 3 0 0 0 M. Narainbar 16 0 0 0 All other shares than that specified above will be excluded from sale.	Chowdry Gopendra Nundan Das Mahapatra.	1,311 8 0	..	303 8 0
880	Pargana Kalindibalsai, mahal Chaddahazari	2,278 11 0	.....	Separate account No. III—8a. share of the mahal All other shares than that specified above will be excluded from sale.	Haripriya Debi	1,139 5 6	... ..	497 3 4
907	Pargana Kasijora, mahal Bazilola *alias* Paulbar.	1,530 4 0	.....	Residuary share, excluding separate account No. I—14a. 10g. share of the mahal All other shares than that specified will be excluded from sale	Syed Aftauddin Ahmed	1,386 13 7	...	650 7 0, January and March 1905.
921	Pargana Kasijora, mahal Chakdaha *alias* Badabaliuvchak.	9,185 8 0, including police.	..	Separate account No. 4—4a. 5g. share of the mahal All other shares than that specified will be excluded from sale.	Ashutosh Chatterjee and others	2,439 14 3, including police	.....	1,141 13 10, including police.
921	Ditto ..	9,185 8 0, including police.	... ..	Separate account No 6—1a 15g. share of the mahal All other shares than that specified will be excluded from sale.	Ditto	1,004 10 7, including police.	.....	469 5 10, including police.

Tauzi No.	Name of mahal and pargana.	Sadar jama of whole estate.	Whether the whole estate is to be sold.	If only a share is to be sold, specification of such share or shares.	Names of proprietors of property to be sold.	If only a share is to be sold, the sadar jama of such share.	If the whole estate is to be sold, the arrears due from it.	If only a share is to be sold, the arrears due from it.
1	2	3	4	5	6	7	8	9
		Rs. A. P.				Rs. A. P.	Rs. A. P.	Rs. A. P.
37	Pargana Kasijora, mahal Gurparumattampore *alias* Chaitnyapore.	738 10 8	.....	Residuary share, excluding separate accounts Nos. 1 and 2—12a. 16g. share of the mahal. All other shares than that specified will be excluded from sale.	Ganganarain Maity and others.	580 14 8	.....	259 8 11, January and March 1905.
973	Pargana Kasijora, mahal Kedalia.	1,460 14 1	Entire ...	.....	Debendra Nundan Das Mahapatra.	.....	8 13 10	.....
1057	Pargana Kasijora kist, mahal Manur.	2,290 6 10	Do. ...	.....	Damudar Das Barman, sabait of Samaljew Tagore.	.....	1,046 13 6	.....
1660	Pargana Khandar, mahal Panchpara.	4,053 11 5	.....	Separate account No. I— Mauza Abdulla— M. Aroon. M. Aroon chak. M. Fatch chak. M. Gokulpore. M. Jamunda. M. Kamal chak. M. Monohar chak. M. Pal Gokul. M. Rasik chak. M. Ranihati. M. Rai chak. M. Binode chak. M. Madhu Sudan chak. M. Pithal chak. Eight annas' share of all the above mauzas. All other shares than that specified will be excluded from sale.	Krishna Chandra Kar and others.	638 5 6	....	293 7 3
1731	Pargana Moynachore, mahal Ankapurba.	1,001 7 2	.....	Residuary share, excluding separate account No. I—8a. share of the mahal. All other shares than that specified will be excluded from sale.	Ganganarain Maity ...	500 11 7	...	235 15 0
1996	Pargana Narainqurkist, mahal Khelar *alias* Bonpatua.	3,415 1 7	.....	Residuary share, excluding separate accounts Nos. 1 to 4— A. G. K. KT. Mauza Alichak 5 6 2 2 M. Baksubeg 10 13 1 1 M. Balaram Chaita. 16 0 0 0 M. Bonpatua ... 16 0 0 0 M. Bagberia ... 16 0 0 0 M. Baligeria ... 16 0 0 0 M. Benaparadihi 16 0 0 0 M. Bramhanibhera. 10 13 1 1 M. Kalikachuk ... 5 6 2 2 M. Kuchiasailuk 16 0 0 0 M. Khalaridihi ... 16 0 0 0 M. Khatrageria chak. 10 13 1 1 M. Lahabaranchak. 10 13 1 1 M. Madhuchak ... 5 6 2 2 M. Mandalageria 5 6 2 2 M. Madhabchak 5 6 2 2 M. Nischindipur 16 0 0 0 M. Lekrageria ... 5 6 2 2 M. Parijatnagar 16 0 0 0 M. Kunjacholta 5 6 2 2 M. Purusattamchak. 16 0 0 0 M. Prempura ... 16 0 0 0 M. Raghunathpore. 16 0 0 0 M. Raipore ... 16 0 0 0 M. Satrughanbar 5 6 2 2 M. Sawtalchak ... 5 6 2 2 M. Sekharpari ... 16 0 0 0 M. Tatra ... 10 13 1 1 M. Uochabanudabar. 5 6 2 2 M. Bhagabanpore 16 0 0 0 M. Chaita ... 16 0 0 0 M. Deulbar ... 5 6 2 2 M. Harachak ... 5 6 2 2 M. Hiraparaschak. 10 13 1 1 M. Koitpore ... 5 6 2 2 M. Kaimkhan ... 10 13 1 1 M. Kaimkhanchak. 10 13 1 1 M. Kalidas Sera 10 13 1 1 All other shares than that specified will be excluded from sale.	Chowdry Krishna Chandra Das Mahapatra and others.	2,441 1 2	.....	338 13 5, January and March 1905.
2347	Pargana Sabong, mahal Mohar.	1,445 9 0	Entire ...	.....	Sarat Chandra Jana and others.	.....	879 8 0	.....
2467	Pargana Shahapore, mahal Hasimpore.	1,014 3 10, including police.	Do. ...	.....	Sarat Chandra Singha-Chowdery.	.....	190 11 4 Land revenue.	.....
2677	Pargana Shipore, mahal Legua.	2,619 5 3	.....	Separate account No. 22— A. G. K. Mauza Akbarpore. 10 0 3 M. Aukda ... ... 7 0 2 M. Barastia ... ... 10 0 3 M. Bohalia ... ... 10 0 3 M. Khagda ... ... 10 0 3 M. Khuratia ... 10 0 3 M. Modekool ... 10 0 3	Srimati Tilottoma Debi, mother and guardian of Chow. Narendra Nath Pahari, minor.	1,376 13 6	.....	639 7 1

Tauzi No.	Name of mahal and pargana.	Sadar jama of whole estate.	Whether the whole estate is to be sold.	If only a share is to be sold, specification of such share or shares.	Names of proprietors of property to be sold.	If only a share is to be sold, the sadar jama of such share.	If the whole estate is to be sold, the arrears due from it.	If only a share is to be sold, the arrears due from it.
1	2	3	4	5	6	7	8	9
		Rs. A. P.		A. G. K. KG. M. Madhab Chandra Chak ... 10 0 3 0 M. Logura ... 6 1 3 0 M. Pansrul ... 3 10 0 6 M. Nagat Khanda 10 0 3 0 M. Shiparebar ... 10 0 3 0 M. Jakapura ... 10 0 3 0 M. Gopalpore ... 6 1 3 0 M. Jagunia ... 10 0 3 0 M. Kanongohar... 3 10 0 6 M. Kanooprojapati Rist ... 3 10 0 6 M. Kuarpore ... 10 0 3 0 M. Krishnapore... 10 0 3 0 M. Brindabanpore 7 0 3 0 M. Chaukda ... 6 1 3 0 M. Dubda ... 10 0 3 0 M. Dubdabati taki 10 0 3 0 M. Dhuturda .. 7 0 3 0 M. Gobrachak ... 10 0 3 0 M. Godaychak ... 7 0 3 0 All other shares than that specified will be excluded from sale.			Rs. A. P.	
2717	Pargana Jalamutta, mahal Keoramal Erinch Bisuan, Bandabazar Jalpai.	3,360 14 2	Entire ...	.....	Sreemati Haripriya Debi	...	1,578 5 8	... ..
2876	Pargana Potaspore, mahal Dehatgokulpore.	22,049 0 0	Do. ...	.....	Chowdry Gopendra Nundan Das Mahapatra.		22,789 13 0, January and March 1905.	.....
				Part III.				
2904	Pargana taraf Bisuan, mahal Garahar, &c., bajapti No. 147.	814 0 0	Entire ...	.....	Panchanon Mirdhya ..	.	262 6 0	..... Malguzari right will be sold.

Midnapore, the May 1905. J. N. Roy, Covd. Deputy Collector in charge.

Notification B.

NOTICE is hereby given under section 5, Act XI of 1859, that unless the arrears mentioned below are paid on or before the next latest date of payment, viz., the 28th June 1905, the undermentioned estates or shares of estates in the district of Midnapore will be put up for sale at the office of the Collector of that district on the 30th June 1905, at 12 o'clock noon for the said arrears.

When in columns 5, 7 and 9 of the appended statement it is stated that only a share is to be sold, it is to be understood that a separate account is kept for that share, and that the other share or shares in the estate are excluded from the sale.

Tauzi No.	Name of mahal and pargana.	Sadar jama of the whole estate.	Whether the whole estate is to be sold.	If only a share is to be sold, specification of such share or shares.	Names of proprietors of property to be sold.	If only a share is to be sold, the sadar jama of such share.	If the whole estate is to be sold, the arrears due from it.	If only a share is to be sold, the arrears due from it.	Nature and amount of demand for which to be sold.
1	2	3	4	5	6	7	8	9	10
476	Pargana Chandrakona, mahal Kuldaha.	Rs. A. P. 10,784 7 2	.....	Separate account No. 1, 4a. 5g. 1ch. 1k. share of the mahal. All other shares than that specified will be excluded from sale.	Paran Ch. Ray and others.	Rs. A. P. 2,575 13 8	Rs. A. P.	Rs. A. P. 144 9 0,	Rs. A. P. Revenue— 144 9 0
844	Pargana Kasijora, mahal Gunukpala.	3,185 0 0 including police.	.....	Separate account No. 1. 8 annas share of the mahal. All other shares than that specified will be excluded from sale.	Munimuhun Ray	1,592 8 0 including police.	.....	743 2 0 including police.	Revenue— 743 8 0 Police— 5 10 0 Cess— 48 15 9 Embankment— 84 0 0
2263	Pargana Sabong, mahal Palpara.	733 3 6	Entire ...	.....	Stya. Tarangini Dasi and others.		171 13 6 January and March 1905.	.....	Revenue— 171 13 6 Cess— 18 14 6

Midnapore Collectorate, the May 1905. J. N. Roy, Covtd. Deputy Collector in charge.

Touzi No.	Name of mahal and pargana.	Sadar jama of whole estate.	Whether the whole estate is to be sold.	If only a share is to be sold, specification of such share or shares.	Names of proprietors of property to be sold.	If only a share is to be sold, the sadar jama of such share.	If the whole estate is to be sold, the arrears due from it.	If only a share is to be sold, the arrears due from it.
1	2	3	4	5	6	7	8	9
		Rs. A. P.				Rs. A. P.	Rs. A. P.	Rs. A. P.
37	Pargana Kasijora, mahal Gurparu-sattampore *alias* Chaitnyapore.	738 10 8	.....	Residuary share, excluding separate accounts Nos. 1 and 2—12a. 16g. share of the mahal. All other shares than that specified will be excluded from sale.	Ganganarain Maity and others.	590 14 8	.....	259 8 11, January and March 1905.
972	Pargana Kasijora, mahal Kadalia.	1,460 14 1	Entire ...	.....	Debendra Nundan Das Mahapatra.	.....	8 13 10	.....
1087	Pargana Kasijora kist, mahal Manur	2,290 6 10	Do. ...	.....	Damudar Das Barman, sabait of Ramaljew Tagore.	.....	1,046 13 6	.....
1660	Pargana Khandar, mahal Panch-para.	4,053 11 5	.....	Separate account No. 1— Mauza Abdulla— M. Aroon. M. Aroon chak. M. Fateh chak. M. Gokulpore. M. Jamunda. M. Kamal chak. M. Monohar chak. M. Pal Gokul. M. Rasik chak. M. Ranihati. M. Rai chak. M. Binode chak. M. Madhu Sudan chak. M. Pithai chak. Eight annas' share of all the above mauzas. All other shares than that specified will be excluded from sale.	Krishna Chandra Kar and others.	633 5 6	....	293 7 8
1731	Pargana Moyna-chore, mahal Ankapurba.	1,001 7 2	.....	Residuary share, excluding separate account No. 1—8a. share of the mahal. All other shares than that specified will be excluded from sale.	Ganganarain Maity ...	500 11 7		235 15 0
1936	Pargana Narain-gurkist, mahal Khelar *alias* Bonpatua.	3,415 1 7	.....	Residuary share, excluding separate accounts Nos. 1 to 4—	Chowdry Krishna Chandra Das Maha-patra and others.	2,441 1 2	.....	338 13 5, January and March 1905.

	A.	G.	K.	KT.
Mauza Alichak	5	6	2	2
M. Haksubeg	10	13	1	1
M. Balaram Chaita.	16	0	0	0
M. Bonpatua ...	16	0	0	0
M. Bagberia ...	16	0	0	0
M. Baligera ...	16	0	0	0
M. Benaparadihi	16	0	0	0
M. Bramhanibhera.	10	13	1	1
M. Kalikachuk ...	5	6	2	2
M. Kuchlamiluk	16	0	0	0
M. Khalaridihi ...	16	0	0	0
M. Khatrageria chak.	10	13	1	1
M. Lahabaran-chak.	10	13	1	1
M. Madhuchak ...	5	6	2	2
M. Mandalageria	5	6	2	2
M. Madhabchak	5	6	2	2
M. Nischindipur	16	0	0	0
M. Lahrageria ...	5	6	2	2
M. Parijatnagar	16	0	0	0
M. Kunjacholta	5	6	2	2
M. Purusattam-chak.	16	0	0	0
M. Prempura ...	16	0	0	0
M. Raghunath-pore.	16	0	0	0
M. Raipore ...	16	0	0	0
M. Satrughanbar	5	6	2	2
M. Sewtalchak ...	5	6	2	2
M. Sekharpari ...	16	0	0	0
M. Tatra ...	10	13	1	1
M. Uochabanuda-bar.	5	6	2	2
M. Bhagabanpore	16	0	0	0
M. Chaita ...	16	0	0	0
M. Deulbar ...	5	6	2	2
M. Harachak ...	5	6	2	2
M. Hirapares-chak.	10	13	1	1
M. Koitpore ...	5	6	2	2
M. Kaimkhan ...	10	13	1	1
M. Kaimkhan-chak.	10	13	1	1
M. Kalidas Sera	10	13	1	1

All other shares than that specified will be excluded from sale.

2347	Pargana Sabong, mahal Mohar.	1,445 9 0	Entire ...	.....	Sarat Chandra Jana and others.	.....	679 8 0	.....
2457	Pargana Shaha-pore, mahal Ha-dimpore.	1,014 2 10, including police.	Do. ...	.....	Sarat Chandra Singha-Chowdery.	.....	180 11 4 Land revenue.	.....
2677	Pargana Shipore, mahal Legua.	2,619 5 3	...	Separate account No. 22—	Srimati Tilottoma Debi, mother and guardian of Chow. Narendra Nath Pahari, minor.	1,376 15 6	.....	639 7 1

	A.	G.	K.
Mauza Akbar-pore.	10	0	3
M. Aulda ...	7	0	3
M. Barastia	10	0	3
M. Bohalia	10	0	3
M. Khagda	10	0	3
M. Khurutia ...	10	0	3
M. Modekool ...	10	0	3

Touzi No.	Name of mahal and pargana.	Sadar jama of whole estate.	Whether the whole estate is to be sold.	If only a share is to be sold, specification of such share or shares.	Names of proprietors of property to be sold.	If only a share is to be sold, the sadar jama of such share.	If the whole estate is to be sold, the arrears due from it.	If only a share is to be sold, the arrears due from it.
1	2	3	4	5	6	7	8	9
		Rs. A. P.		A. G. K. KG. M. Madhab Chandra Chak ... 10 0 3 0 M. Logura ... 6 1 3 0 M. Panarul ... 3 10 0 6 M. Nagat Khanda 10 0 3 0 M. Shiparebar ... 10 0 3 0 M. Iakapura ... 10 0 3 0 M. Gopalpore ... 6 1 3 0 M. Jagunia ... 10 0 3 0 M. Kanongohar ... 3 10 0 6 M. Kancoprojapati kist ... 3 10 0 6 M. Kuarpore ... 10 0 3 0 M. Krishnapore 10 0 3 0 M. Brindabanpore 7 0 3 0 M. Chaulda ... 6 1 3 0 M. Dubda ... 10 0 3 0 M. Dubdabati taki 10 0 3 0 M. Dhuturda ... 7 0 3 0 M. Gobrachak 10 0 3 0 M. Godaychak ... 7 0 3 0 All other shares than that specified will be excluded from sale.			Rs. A. P.	
2717	Pargana Jalamutta, mahal Keoramal Erinch Hisuan, Bandabazar Jalpai.	3,360 14 2	Entire	.....	Sreemati Haripriya Debi	....	1,575 5 8	....
2876	Pargana Potaspore, mahal Dehatgokulpore.	28,049 0 0	Do. ...		Chowdry Gopendra Nundan Das Mahapatra.		24,769 3 0, January and March 1905.	....
				Part III.				
2904	Pargana taraf Bisuan, mahal Garahar, &c., bajapti No. 167.	814 0 0	Entire ...		Panchanon Mirdhya		267 6 0	.... Malguzari right will be sold.

Midnapore, the May 1905. J. N. ROY, Covd. Deputy Collector in charge.

Notification B.

NOTICE is hereby given under section 5, Act XI of 1859, that unless the arrears mentioned below are paid on or before the next latest date of payment, viz., the 28th June 1905, the undermentioned estates or shares of estates in the district of Midnapore will be put up for sale at the office of the Collector of that district on the 30th June 1905, at 12 o'clock noon for the said arrears.

When in columns 5, 7 and 9 of the appended statement it is stated that only a share is to be sold, it is to be understood that a separate account is kept for that share, and that the other share or shares in the estate are excluded from the sale.

Touzi No.	Name of mahal and pargana.	Sadar jama of the whole estate.	Whether the whole estate is to be sold.	If only a share is to be sold, specification of such share or shares.	Names of proprietors of property to be sold.	If only a share is to be sold, the sadar jama of such share.	If the whole estate is to be sold, the arrears due from it.	If only a share is to be sold, the arrears due from it.	Nature and amount of demand for which to be sold.
1	2	3	4	5	6	7	8	9	10
678	Pargana Chandrakona, mahal Kuldaha.	Rs. A. P. 10,784 7 2	.....	Separate account No. 1, 6a. 5g. 1ch. 1k. share of the mahal. All other shares than that specified will be excluded from sale.	Paran Ch. Ray and others.	Rs. A. P. 2,875 13 3	Rs. A. P.	Rs. A. P. 144 9 0,	Rs. A. P. Revenue— 144 9 0
1944	Pargana Kasijora, mahal Gunukpala.	3,185 0 0 including police.		Separate account No. 1, 8 annas share of the mahal. All other shares than that specified will be excluded from sale.	Munimuhun Ray ...	1,592 8 0 including police.	.....	748 2 0 including police.	Revenue— 742 8 0 Police— 5 10 0 Cess— 48 14 9 Embankment— 84 0 0
2263	Pargana Sabong, mahal Palpara.	733 3 6	Entire ...	.....	Shya. Tarangini Dasi and others.		171 13 6 January and March 1905.	..	Revenue— 171 13 6 Cess— 13 14 6

Midnapore Collectorate, the May 1905. J. N. ROY, Covtd. Deputy Collector in charge.

Notice of Sale.

NOTICE is hereby given, under sections 6 and 13 of Act XI of 1859, that the undermentioned estates and shares of estates in t district of 24-Parganas will be put up for sale at the office of the Collector of that district on the 27th June 1905 at 12 o'clo noon for arrears of revenue and other demands which by law are realizable as arrears of land revenue.

When in columns 5, 7 and 9 of the appended statement it is stated that only a share is to be sold, it is to be understood that separate account is kept for that share and that other share or shares are excluded from sale.

Consecutive No	Tauzi No.	Name of pargana and mahal.	Sadar jama of the whole estate.	Whether the whole estate is to be sold.	If only a share is to be sold, the specification of such share.	Names of proprietors of the properties to be sold.	If only a share is to be sold, the sadar jama of such share.	If the whole estate is to be sold, the arrears due from it.	If only a share is to be sold, the arrears due from it.
1	2	3	4	5	6	7	8	9	10
			Rs. A. P.				Rs. A. P.	Rs. A. P.	Rs. A.
1	1	Magura, Chetla and others.	5,422 9 8	.....	12a. 15g. 3k. 1kg. 8t. of the entire estate minus 8a. in each of the mauzas as Sriramporo, Baghirghole and Rajeb Molla's Chak.	Kali Chandra Roy Choudhury and others.	1,161 9 10½	... ..	537 10
2	2	Magura, kismat Kangonberia and others.	2,823 15 2½	.....	4a. 5g. 2k. 5½d. of the entire estate minus 4a. 5g. 2k. 5½d. of mauzas Chetla and Alipore.	Kali Nibaran Roy Choudhury.	738 11 11½	.....	253 14
3	3-1	Magura, Laskarpore and others.	8,289 12 6½	... .	6a. share, excluding 10a. of the entire estate.	Bindoobashini and Gonesh Jemoni Debi guardian of Rajendro Kumar Roy Choudhury.	3,108 10 7½	.	1,312 0
4	3-1	Magura, kismat Joolpia and others.	2,462 1 3	..	Excluding 10a., remaining 6a. share.	Ditto ...	1,307 7 9½		471 1
5	9	Magura, kismat Chetla and others.	810 0 6½	Whole ..	.....	Surendro Nath Roy and others.		156 11 1½	.....
6	10	Ditto ...	809 10 1½	Do. ...	.....	Ram Kali Roy Choudhury and others.	... .	98 4 0	..
7	13	Ditto ...	810 11 3½	Do. ...	... ..	Mohit Kali Debi and others.		195 5 11½	.....
8	15	Magura, kismat Khoriberia and others.	4,078 14 11½	.. .	Excluding 3a., remaining 13a. share.	Kali Mohal Roy Choudhury and others.	3,312 13 8½	.....	976
9	15-1	Ditto ...	4,078 14 11½	.....	Excluding 13a., remaining 3a. share.	Kali Pado Roy Choudhury.	766 1 3	.....	266
10	53	Magura, kismat Rameswarpur and others.	3,196 1 2		Residuary share, i.e., entire estate minus shares composed in the separate account Nos. 1 to 9.	Dwija Das Bhaduri, Manager, Court of Wards, and another.	2,102 1 0½	.	551 10
11	56	Magura, kismat Sriramporo.	3,126 5 7½	.....	Excluding 1a. 15g. 2k. 2d., remaining 14a. 4g. 1k. 3kr. 1d.	Kristo Prosonno Mondal and others.	2,778 15 8½	... .	990
12	85	Magura, kismat Atgachia and others.	984 14 7	.....	The whole estate minus 7a. share in mauzas Chak Kantalia, and 2a. 1g. 2k. share in each of the mauzas kismat Babanpur and Nona.	Trailakhya Nath Barui	261 11 10	.....	249 4
13	120	Baridhati, kismat Kadalia and others.	5,093 5 3½	Whole ...	.. . .	Harihar Chatterjee ..	... ..	1,815 13 1½	.....
14	158	Khaspore, Sriramporo and others.	703 8 8	.....	14a. 4g. 1k. 2kr. 7d. share, excluding 1a. 15g. 1k. 1kr. 2d.	Kristo Prosonno Mondle and others.	625 5 11	. .	138
15	230	Khaspore, Dhakuria and others.	1,064 11 10		16a. share minus 1a. 15g. 2k. 2d. share in each of the mauzas Gopia and Berju.	Sarat Kumari Dasi and others.	1,046 10 9	. .	60
16	250-9	Midanmolla, Barulpore and others.	33,620 2 7	.....	1a. 11g. 4d. share, excluding 14a. 8g. 3k. 5d. share.	Jotindro Kumar Roy Choudhury.	5,113 13 7	.....	128 13
17	251	Medan Molla, Rajpur and others	1,075 2 2½	.	11a. 11g. 1kr. 1d. share, excluding 4a. 8g. 3k. 1kr. 2d. share.	Kedar Nath Roy Choudhury and others.	776 7 10		38 1
18	253	Pargana Mudan Molla, Kharampara and others.	1,079 3 6	.....	11a. 11g. 1kr. 1d. share, excluding 4a. 8g. 3k. 1kr. 2d.	Kedarnath Roy Choudhury and others.	779 7 0		46
19	314	Muragacha, Harinarainpore and others.	12,200 12 6½	.....	7a. 11g. 2k. 2kg. 13t. 1k. share of the entire estate.	Banki Behari Mandal and others.	5,747 4 6		582
20	315-1	Muragacha, Roghunathpore and others.	10,229 15 6	... ..	18g. 3k. share, excluding 15a. 1v. 1k. share.	Kristo Prasanna Mandal and others.	869 6 7½	.....	188
21	315-3	Ditto	10,229 15 6		Excluding 18a. 19g. 2k 2kr. 2d. share, remaining 2a. 1k. 1d. share.	Gopi Kisore Mandal and others.	1,287 9 31½	... ..	676
22	315-11	Ditto ..	10,229 15 6	..	Excluding 14r. 17g. 2k. share, remaining 1a. 3g. 2k. share.	Apurba Kumari Dasi ..	719 4 9		375
23	326	Muragacha, Sistoopore and others.	2,443 3 0	.....	Excluding 15a. 12g. share, remaining 6g. share.	Jotindra Nath Roy Choudhury and others.	1,212 2 2½	..	585
24	327-1	Muragacha, Dharapara and others.	1,064 7 4	.. .	Ditto	Uma Prosad Ghose ...	532 3 8	.... .	263
25	346	Bala Santoshbati and others.	8,531 0 9		Excluding 2a. 13g. 3k. 2kr. 2d., remaining 13a. 6g. 1kr. 1d. share.	Brojendranath Mandal and others.	4,596 15 4	.....	336
26	385	Azimabad Hudaraskhali and others.	19,434 8 0	.....	In each of the mauzas except Khakramuri 15g. share.	Gopikissore Mandal and others.	909 2 7½	.....	814
27	385-1	Ditto ...	19,434 8 0	...	Ditto 1a. 2g. 2k. share ...	Nobokisore Mandal and others.	1,365 12 7		388
28	385-4	Ditto ...	19,434 8 0	. . .	Excluding 15a. 4g. 2k. 2kr. remaining 15g. 3k. 1kr. share.	Brojendra Nath Mandal	728 8 7½	.....	516 1
29	385-5	Ditto ...	19,434 8 0	.....	1a 1g. 3k. 1d. share of the entire estate.	Gopi Kissore Mandal and others.	1,303 10 7½	.....	728
30	385-6	Ditto ...	19,434 8 0	.....	Excluding 15a. 4g. 2k 2kr., remaining 15g. 1k. 1kr. share.	Kristo Prosanna Mandal	928 8 7½	.....	516
31	385-9	Ditto ...	19,434 8 0	.....	Excluding 14a. 17g. 2k., remaining 1a. 2g. 2k. share.	Apurba Kamari Dasi ...	1,362 8 7½	.....	761 1
32	385-10	Ditto ...	19,434 8 0	.....	Excluding 15a. 4g. 2k. 2kr., remaining 15g. 1k. 1kr. share.	Sarat Kumari Dasi .	928 8 7½	.	259
33	385-11	Ditto ...	19,434 8 0	.....	In all the mauzas except mauza Bhagramori 15g. 1k. 1kr. share.	Kalidas Adak and others.	807 6 10	.	234 1
34	385-12	Ditto ...	19,434 8 0	... ..	Excluding 15a. 1g. share remaining 10g. share.	Nobokisore Mandal and others.	605 9 5	.... .	538
35	385-14	Ditto ...	19,434 8 0	.....	Excluding 15a. 5g., remaining 15g. share.	Chandi Charan Manda and others.	906 6 1	... ..	507 1
36	388-1	Bala Moloyapore and others.	8,926 9 0	..	Excluding 14a. 17g. 2k., remaining 1a. 2g. 2k. share.	Nobokisore Mandal and others.	585 8 2½	.A...	169
37	388-3	Ditto ..	8,926 9 0	.....	Excluding 14a. 18g. 1k. 2kr. 2d., remaining 1a. 1g. 2k. 1d. share.	Gopi Kissore Mandal and others.	860 8 4½	.....	183 1
38	389-1	Bala Santoshpore and others.	9,401 5 10	.....	Excluding 14a. 17g 2k., remaining 1a. 2g. 2k. share.	Radha Binod Mandal and others.	663 8 10½	... ..	171
39	389-4	Ditto ..	9,401 5 10	. .	Excluding 14a 18g. 1k. 2kr. 2d., remaining 1a. 1g. 2k. 1d. share.	Gopi Kissore Mandal and others	614 11 8½	.... .	176

Consecutive No.	Touzi No.	Name of pargana and mahal.	Sadar jama of the whole estate.	Whether the whole estate is to be sold.	If only a share is to be sold, the specification of such share	Names of proprietors of the properties to be sold.	If only a share is to be sold, the sadar jama of such share.	If the whole estate is to be sold, the arrears due from it.	If only a share is to be sold, the arrears due from it.
1	2	3		4	5	6	7	8	9
			Rs. A. P.				Rs. A. P.	Rs. A. P.	Rs. A. P.
40	389-12	Balia, Santoshpur and others.	9,401 5 10	.....	Excluding 14a. 17g. 2k., remaining 1a. 3g. 2k. share.	Apurba Kumari Dasi	663 5 11	.....	348 14 4
41	391-5	Muragacha, Gomukhi, and others.	5,538 8 6	.....	Excluding 13a. 19g. 2k. 2kr., 2d., remaining 2a. 1k. 1d. share.	Gopikisor Mandal and others.	697 2 0	.....	239 0 11
42	391-6	Ditto	5,538 8 6	.....	Excluding 14a. 6g. 2k. 2kr. remaining 1a. 13g. 1k. 1kr. share.	Kshirodamayee Dasi, widow of late Sashi Bhusan Biswas.	576 14 11	.....	197 15 2
43	393	Azimabad, Huda Joychandipur.	8,313 7 8	.....	Excluding 13a. 6g. 2k. 2kr., remaining 2a. 12g. 1k. kr. share.	Nabakisor Mandal and others.	1,385 9 2	.....	558 7 8½
44	393-1	Ditto	8,313 7 8	.....	Excluding 12a. share, remaining 4a. share.	Radhabinod Mandal and others.	2,078 5 11	.....	1,546 15 1
45	393-3	Ditto	8,313 7 8	.....	Excluding 13a. 6g. 2k. 2kr., remaining 2a. 13g. 1k. 1kr. share.	Chandi Charan Mandal and others.	1,385 9 4	.....	558 10 0
46	393-4	Ditto	8,313 7 8	.....	Ditto ditto ...	Nabakisor Mandal and others.	1,385 9 4	.....	558 9 11
47	394-6	Azimabad, taraf Kisorepore.	7,108 13 11	.....	Excluding 14a. 6g. 2k. 2kr., remaining 1a. 13g. 1k. 1kr. share.	Srimaty Kshirodamoyi Dasi.	740 8 1	.....	154 7 9
48	395	Azimabad, taraf Madhabpore.	14,687 13 11	.....	Excluding 6a., remaining 10a. share.	Baikuntha Nath Dey, and others.	9,161 2 8	.....	2,453 9 4
49	395-1	Ditto ...	14,687 13 11	.....	Excluding 10a., remaining 6a. share.	Srimati Kiron Sashi Dasi, guardian of Kamal Kristo and Bata Kristo Mandal.	5,496 11 3	.....	2,453 8 8
50	400	Balia Ramchandrapur and others.	747 11 1	Whole ...	.....	Radha Mohan Mandal...	.....	235 7 3	.....
51	401-6	Azimabad Huda Ramkristapur and others.	8,941 9 7	.....	Excluding 14a. 16g. 2kr., remaining 1a. 5g. 3k. 1kr. share.	Gopi Kissore Mandal and others.	781 13 6½	.....	130 0 10½
52	401-7	Ditto ...	8,941 9 7	.....	Excluding 14a. 17g. 2k., remaining 1a. 3g. 2k. share.	Krista Lal Mandal and others.	628 11 3½	.....	33 4 4
53	401-11	Ditto ...	8,941 9 7	.....	Ditto ditto ...	Apurba Kumari Dasi...	625 11 3½	.....	234 15 10½
54	403	Azimabad, taraf Patharbaria, and others.	5,143 3 3	.....	Excluding 9a. 14g. 2k. 2kr., remaining 6a. 5g. 1k. 1kr. share.	Banka Behari Mandal and others.	2,014 6 6½	.....	331 11 5½
55	403-2	Ditto ...	5,143 3 3	.....	Excluding 9a. 6g. 2k. 2kr., remaining 6a. 13g. 1k. 1kr. share.	Kshiroda Mayee Dasi, widow of Sashi Bhusan Biswas.	2,143 15 11	.....	413 4 5
56	411	Magura, kismat Dharmakhola and others.	2,513 5 7	Whole ...	.....	Manilal Banerjea ...	.....	753 5 5	.....
57	1147	Modanmolla Komalpore and others.	1,062 10 3	.....	Excluding 4a. 8g. 3k. 1kr. 3d., remaining 11a. 11g. 1kr. 1d. share.	Durgadas Roy Chowdhury and others.	781 13 7	.....	33 13 1

24-Parganas Collectorate, Alipore, the 22nd May 1905.

J. H. BERNARD, Collector.

Statement of the Affairs of the Bank of Bengal for the week ending 16th May 1905.

LIABILITIES.

		Rs.	A.	P.
Capital paid up		2,00,00,000	0	0
Reserve Fund		1,32,00,000	0	0
Public Deposits at Head Office ... ... Rs.	81,64,224 12 2			
Ditto ditto at Branches ,,	78,41,206 2 2	1,60,05,430	14	4
Other Deposits at Head Office and Branches		11,16,14,076	10	1
Bank Post Bills, &c.		18,13,723	0	5
Sundries		29,18,903	12	1
Rupees ...		16,55,52,134	4	11

ASSETS.

		Rs.	A.	P.
Government Securities		1,42,63,552	1	11
Other authorised investments		79,19,013	13	8
Loans on Government and other authorised securities		3,32,04,628	12	9
Accounts of Credit on ditto ditto ...		2,07,91,524	5	10
Bills discounted and purchased		3,48,05,956	0	0
Balances with other Banks		14,60,763	2	0
Bullion		...		
Dead Stock		18,51,174	7	7
Stamps		13,427	0	1
Sundries		12,79,007	4	2
		11,55,89,027	0	0
Cash and Currency Notes at Head Office* ... ... Rs.	2,99,83,208 15 1			
Cash and Currency Notes at Branches† ,,	1,99,79,898 5 10	4,99,63,107	4	11
Rupees ...		16,55,52,134	4	11

* Includes Sovs. & ½ Sovs., value Rs. 1,88,940 0 0
† Do. do. do. ,, 1,82,635 0 0
Rs. 3,71,575 0 0

By order of the Directors,
W. D. CRUICKSHANK,
Secretary and Treasurer.

E. DICKINSON,
Chief Accountant.

Rate for Demand Loans 4 per cent.
Percentage 37·75.

BANK OF BENGAL,
Calcutta, 15th May 1905.

(536—1)

Statement of Government Promissory Notes enfaced for payment of Interest in London, under deduction of amount retransferred to India, and outstanding in the books of the Bank of Bengal on the 15th May 1905.

PARTICULARS.	3 per cent. of 1896-97.	2½ PER CENT. LOANS—							4 PER CENT. LOANS—							4½ PER CENT. LOANS—				GRAND TOTAL.
		Of 1948-49.	Of 1854-55.	Of 1865.	Of 1870.	Of 1893-94.	Of 1900-01.	Total.	Of 1922-23.	Of 1925-26.	Of 1942-43.	Of 1854-55.	Transfer of 1866.	Reduced 4 per cent. loan of 1879.	Total.	Of 1879.		Transfer loan of 1879, 4½ per cent. portion.	Total.	
Balance of 30th April 1905 ...	93,58,000	1,61,84,600	10,68,53,700	2,34,12,300	1,34,21,300	.....	23,54,700	16,02,27,100	6,934	5,000	.....	3,500	40,300	2,500	58,734	5,000	...	29,500	34,500	16,96,73,334
ADD—																				
Amount of transferred to in London	.....	.....	.....	.....	.....	.....	.....	.....	.....	.....	.....	.....	.....	.....	.....	.....	...	.....	.....	.....
Amount enfaced at Madras up to	.....	.....	.....	.....	.....	.....	.....	.....	.....	.....	.....	.....	.....	.....	.....	.....	...	.....	.....	.....
Amount enfaced at Bombay up to 6th May 1905	.....	13,000	.....	2,000	.....	.....	3,000	18,000	.....	.....	.....	.....	.....	.....	.....	.....	...	.....	.....	18,000
Amount enfaced at Calcutta between 1st and 15th May 1905	.....	26,900	3,01,500	2,000	.....	.....	1,000	3,44,400	.....	.....	.....	.....	.....	.....	.....	.....	...	.....	.....	3,44,400
	93,58,000	1,62,36,500	10,71,55,200	2,34,17,300	1,34,21,300	.....	23,58,700	16,05,89,500	6,934	5,000	.....	3,500	40,300	2,500	58,734	5,000	...	29,500	34,500	17,00,48,734
DEDUCT—																				
Amount written off in the London registers ...	.....	.....	.....	.....	.....	.....	3,04,000	3,04,000	.....	.....	.....	.....	.....	.....	.....	.....	...	.....	.....	3,04,000
Balance on 15th May 1905 ...	93,58,000	1,62,36,500	10,71,55,200	2,34,17,300	1,34,21,300	.....	20,54,700	16,02,85,500	6,934	5,000	.....	3,500	40,300	2,500	58,734	5,000	...	29,500	34,500	16,97,36,734

NOTE.—From 9th June 1867 to 15th Mar. 1905—Enfaced from India, 11,362 lakhs; retransferred from London, 11,035 lakhs.
" 16th Mar. 1905 " 31st " " " " " 16 " " " " 2 "
" 1st April " " 15th April " " " " " 14 " " " " 1 lakh.
" 16th " " " 30th " " " " " 2 " " " " —
" 1st May " " 15th May " " " " " 3 " " " " 3 lakhs.
11,397 " 11,041 "
11,041 "
Balance against India 346 "

J. GRAVES,
Offg. Superintendent.

W. D. CRUICKSHANK,
Secretary and Treasurer.

(581—1)

PUBLIC DEBT OFFICE, BANK OF BENGAL,
Calcutta, the 17th May 1905.

MILITARY CEMETERY, BHOWANIPORE.

List of unrepairable graves in the Southern half.

No.	Name and plot.	Wife, son or daughter of—	Date of death.	Other particulars.
1	Edwin Adolphus Boezalt Valery Letord (A Plot).	.....	.....	.....
2	Lydia A. Loch (C Plot) ...	.....	17th May 1861 ...	.....
3	Elizabeth Ann (C Plot) ...	Wife of J. R. Locken, H. C. M.	.....	.....
4	Mrs. Ann Smith (E Plot)	Wife of John Smith, Ordnance Department.	.....	.....
5	Annie (E Plot) ...	Wife of Capt. J. Ac. Duncan, H. M's. 29th Regiment.	.....	.....
6	John Brigham (E Plot) ...	.....	.....	Assistant Surgeon, Madras Army.
7	John Bennett Williams (E Plot).	.....	.....	Capt. in H. M's. 99th Regt.
8	John Walter (E Plot) ...	Son of John Fenon Crockett	29th July 1863 ...	Age 4 months and 18 days.
9	John Scholfield (E Plot)	.....	17th April 1861 ...	Of the Ganges Steam Navigation Company.
10	Mrs. Mary Spurgeon (E Plot).	Widow of the late Ensign S. Spurgeon, 18th N. Intantry.	11th February 1862.	.....
11	Lt.-Col. George Gordon (E Plot).	.....	7th March 1860	Of the Bengal Army. Commander of the 1st Sikh Infantry.
12	Louisa Baillie (E Plot) ...	.....	11th October 1859	.....
13	Edmund Flemyng Tritton (E Plot).	.....	4th April 1857 ...	Ensign H. E. I. C. S.
14	Jhonias Dellaway (E Plot)	.....	22nd January 1877	.....
15	Charles James Thompson (E Plot).	.....	2nd February 1894.	Erected by his friends.
16	Sergt. John Quinier; also George and Mary Crowley; also Thos. Dickson (E Plot).	.....	26th October 1834	.....
17	Mrs. Ann Shaw (L Plot)	.....	25th September 1858.	Late mistress of the Lower Orphan School.
18	Charles Edward Hunter (N Plot).	.....	4th December 1875.	Capt., Bengal Staff Corps.
19	Colin M. Arnot (N Plot)	.....	16th June 1877 ...	.....
20	Capt. Fred. Alex Darley (K Plot).	.....	23rd March 1873	B. S. C., 3rd Regt., N. I
21	Elizabeth Louisa (K Plot)	Wife of Capt. R. F. Firth, B. S. C.	21st June 1872 ...	.....
22	William B. Huggins (K Plot).	.....	18th February 1869.	.....
23	George Francis Preston (K Plot).	.....	30th June 1869 ...	Late Lieut. in 102nd Royal Madras Fusiliers.
24	Lt.-Col. G. B. Jennings (K Plot).	.....	6th March 1870	2nd Battalion, H. M. 19th Regiment.
25	Surgeon A. Mackay Macbeth (K Plot).	.....	14th February 1866.	Of H. M. 105th Regt.
26	Mr. Charles Hayes (K Plot).	.....	14th April 1866 ...	House Surgeon, Medical College Hospital.
27	Lieut. J. N. FitzGerald (K Plot).	.....	20th October 1866	37th M. N. I.

No.	Name and plot.	Wife, son or daughter of—	Date of death.	Other particulars.
28	Vesey Hovenden Walker, Esq. (K Plot).	Eldest son of W. F. Vesey Walker, Esq.	4th March 1867	Lieut., Royal Artillery, King's Cliff House, Jersey.
29	James Begley; also George Henry Begley (K Plot).	Sons of Mr. and Mrs. Begley	6th September 1866 and 25th March 1876.	.....
30	William Keates (K Plot)	.....	19th April 1869 ...	Deputy Inspector-General of Hospitals, Dacca Circle.
31	Georgiana Clementson (K Plot).	Wife of Col. G. Bourchire, C. B., R. H. Artillery.	2nd March 1868	.....
32	Lieut. Francis Alexander Gordon (K Plot).	.....	7th April 1868 ...	2nd Battalion, 60th Rifles. (Erected by the officers.)
33	Frederick Louis Stoll Dyce (K Plot).	Youngest son of Professor Dyce of the University of Aberdeen.	1st September 1867.	.....
34	Mary (K Plot) ...	Wife of Major George Archibald Galloway, late 1st Regt., European Bengal Light Cavalry.	.....	.....
35	Stephen Theodore Riley, Esq. (K Plot).	Son of Genl. Stephen Davis Riley.	9th June 1866 ...	.....
36	Samuel Yates Worthington (K Plot).	.....	19th „ „ ...	Ensign of H. M. 27th Inniskillings. (Erected by brother officers.)
37	Master John Charles (K Plot).	Son of Mr. and Mrs. John Bristow.	28th July „ ...	.....
38	Mr. Henry Burke; also Mrs. Mary Ann Morgan (K Plot).	.....	25th July 1866 and 28th April 1867.	Late Chief Engineer of the S.S. *Arratoon Apcar*. (Erected by C. H. Morgan.)
39	Mr. Isaac Lemon; also his grandson, Mr. John Lemon (K Plot).	.....	14th September 1865 and 15th August 1876.	.....
40	Robert Bancroft Kinsey, F.R.C.S. (K Plot).	.....	1st April 1865 ...	Deputy Inspector-General of Hospitals.
41	Ben. A. Carpenter (K Plot).	.....	29th May „ ...	Commander, Steam-tug *Alligator*. (Erected by a few friends.)
42	Capt. William Cody (K Plot).	.....	16th April „ ...	H. M. 34th Regt. (Erected by brother officers.)
43	Annie Jane (K Plot) ..	Wife of Wilhelm Ter Veen...	17th July 1865	.....
44	Richmond Shakespear, Esq. (K Plot).	.....	12th August „	.....
45	Alexander Mair MacGregor, B.A. (K Plot).	Elder son of the late Lt.-Col. Malcolm MacGregor.	24th January „	Bengal Civil Service.
46	William Jones, Esq. (K Plot).	.....	2nd March „	.....
47	Lt.-Col. James Lumsdaine Walker (K Plot).	.....	11th „ „	38th Regt., Bengal N. Infantry.
48	William Freeling (O Plot)	Second son of the Revd. W. Spilsbury Taunton, Somersetshire,	22nd May 1893 ...	.....
49	John Hadden (O Plot) ...	.....	29th February 1884	Sergt., Calcutta Police.
50	Alfred Henry; also Frederick Charles Jarvis (O Plot).	Son of Alfred W. and Mary A. Hocking.	16th April 1885 ...	.....
51	Keith William Stewart McKenzie Cameron (O Plot).	.....	19th March 1865	Royal Horse Artillery. Born in Dingwell, Scotland.

The Commissioners for the Port of Calcutta.

NOTICE is hereby given that the undermentioned packages, lying unclaimed in the Commissioners' Import Warehouse, will be sold by public auction on or after the 5th June 1905 under section 118 of Act III of 1898 :—

Date of removal.	Marks.	No.	Quantity.	Description.	Vessel's name.	Remarks.
1904.	SHED No. 1.					
November 7	No mark	...	16	Broken pieces R.-W. pipes.	S.S. "Ormidale."	
„ 7	G S Mullick or G L Mullick ..	...	1	Case ...	Ditto.	
„ 7	S C S & Sons or S C S & Sons in a block.	...	2	Tubs ...	Ditto.	
„ 11	Y Y in a diamond	...	6	Bundles G C sheet...	S.S. "Clan Murray"	
„ 11	No mark	...	1	Bundle angle iron ...	Ditto.	
„ 29	H M or nil	...	1	Bag coriander seed	S.S. "Clan Ranald."	
December 9	60 in a diamond, H B top & Co. below.	9770-9819	50	Cases ...	S.S. "Wartenfels."	
„ 9	M R	...	1	Bag (torn and empty)	Ditto.	
„ 13	No mark	...	1	Cask empty ...	S.S. "Marwari."	
1905.						
January 2	No mark	...	...	A quantity of sugar sweepings in bulk.	S.S. "Nippon."	
„ 14	Degoo Borduti	140126	1	Case tea cheat ...	S.S. "Goorkha."	
„ 14	No mark	...	1	Cask cement broken and short.	Ditto.	
„ 26	H C Ganguli & Co or no mark ...	...	1	Case ...	S.S. "Matiana."	
„ 26	J D S N in a diamond ...	...	1	Cask or keg ...	Ditto.	
„ 26	K F 129 in a diamond, or no mark.	...	1	Drum (broken and empty).	Ditto.	
„ 26	M M in a diamond	118	1	Case tea lead ...	Ditto.	
„ 26	No mark	...	6	Casks cement ...	Ditto.	
„ 26	Nil or Traces of P S ...	...	1	Joist ...	Ditto.	
„ 26	J D S N in a triangle and inverted triangle.	...	1	Drum empty ...	Ditto.	
1904.	*Withdrawn from last sale*					
October 5	No mark	...	1	Keg bolt nuts ...	S.S. "Matiana."	
„ 5	Ditto	...	1	Cask cement ...	Ditto.	
„ 5	Ditto	...	2	Pieces machinery ...	Ditto.	
„ 5	Ditto	...	6	Bars angle iron ...	Ditto.	
„ 14	Ditto	...	1	Bar rod iron ...	S.S. "Manora."	
„ 14	Ditto	...	1	Bundle brass rod ...	Ditto.	
„ 14	Ditto	...	1	Joist ...	Ditto.	
„ 14	Ditto	...	1	Keg paint ...	Ditto.	

Date of removal.	Marks.	No.	Quantity.	Description.	Vessel's name.	Remarks.
1904.	SHEDS Nos. 2-3.					
November 8	G F Kellner & Co.	889	1	Parcel ...	S S. "Marquis Bacquehum."	
„ 16	X X X Red or nil	...	4	Bars tee iron ...	S.S. "Marienfels."	
„ 16	No mark or addressed or samples	...	2	Cases samples of matches.	Ditto ...	H. G.
„ 27	No mark	...	6	Bags sweeping sugar	S.S. "Rajput."	
December 2	Deck or Scharsfels Deck	61B	1	Case empty ...	S.S. "Scharsfels."	
„ 2	F & C	1028-9	2	Cases ...	Ditto.	
„ 6	44861 in a block, H C B on top or 4485 in a block, T H C B on top.	...	1	Case ...	Ditto ...	H. G.
„ 5	A W Kossy & Co or addressed ...	4 or 101	1	Do. ...	S.S. "Silesia."	
„ 5	B N Das	...	1	Parcel ...	Ditto.	
„ 9	E H in a diamond	...	2	Cases ...	S.S. "Ula."	
„ 9	6300 in a triangle	...	1	Keg nail (broken) ...	Ditto.	
„ 9	No mark	...	1	Parcel clothing ...	Ditto.	
„ 9	Ditto	...	1	Tin Quaker Oats ...	Ditto.	
„ 9	Ditto	...	1	Tin jam ...	Ditto.	
„ 9	S in a diamond, W H on top and B C below, or S in a diamond, W N on top and B C below.	12	1	Case ...	Ditto.	
„ 9	W D S or no mark ...	...	1	Cask (broken and empty).	Ditto.	
„ 9	Mil. Wks. Fort William or nil ...	...	13	C. I. pipes (broken)	Ditto.	
„ 9	Buildings and roads ...	...	14	Ditto ...	Ditto.	
„ 22	A L M M O G R H Co in a triangle or care of G R H Co.	...	1	Case ...	S.S. "Borneo."	
1905.						
January 4	No mark or Hatigur ...	...	1	Bar iron or fire bar broken in three pieces.	S.S. "Clan MacLachlan."	
„ 11	Nil	...	8	Kegs (broken and empty).	S.S. "Statesman."	
„ 14	G S or nil	...	1	Keg bolts and nuts	S.S. "City of Manchester."	
„ 14	007 in a diamond, G S below or nil.	...	9	Bags ...	Ditto.	
„ 14	No mark or Y in a trangle, C J on top.	...	3	Do. ...	Ditto.	
February 17	No mark	...	3	Do. sugar ...	S.S. "Francisco Ciampa."	

Date of removal.	Marks.	No.	Quantity.	Description.	Vessel's name.	Remarks.
1904.	SHED No. 4.					
November 5	T W & Co in a block or no mark	...	1	Tube or pipe ...	S.S. "Mombassa."	
„ 5	No mark	...	2	Pieces iron works ...	Ditto.	
„ 5	Ditto	...	5	Pieces pig iron ...	Ditto.	
„ 5	Ditto	...	1	Box M'dise ...	Ditto.	
„ 5	Ditto	...	1	Coil wire	Ditto.	
„ 5	Ditto	...	1	Bag M'dise ...	Ditto.	
„ 5	Ditto	...	1	Bottle tapioca ...	Ditto.	
„ 5	B & Co in a triangle, T C on sides or no mark or B in a triangle, J S on sides.	...	1	Plate ..	Ditto.	
„ 5	B C in a diamond or no mark ...	...	1	Do.	Ditto.	
„ 5	Nil or V D T	...	5	Bags M'dise ...	Ditto.	
„ 5	↑ Buildings and roads ...	...	5	Cast-iron pipes ...	Ditto.	
„ 17	↑ Bartelly or no mark ...	...	1	Cask tar ...	S.S. "Rewa."	
„ 17	F J U M & Co in a diamond, Gopalpore below.	41	1	Case (broken and empty).	Ditto.	
„ 17	No mark or red	...	10	Bundles round ...	Ditto.	
„ 17	M P	...	1	Joist ...	Ditto.	
„ 17	No mark	...	1	Bag sweeping coriander-seed.	Ditto.	
„ 17	899 in a triangle, M B C below or nil.	...	3	Casks cement ...	Ditto.	
„ 17	$\frac{E\ A}{R}$ or nil	...	1	Ditto ...	Ditto.	
„ 17	W M & Co	...	1	Case tea chest ...	Ditto.	
„ 24	No mark	...	...	A quantity of sweeping sugar.	S.S. "Ardito".	
„ 24	Ditto	...	1	Cask sulphur ...	Ditto ...	H. G.
„ 24	Ditto	...	1	Keg do. ...	Ditto ...	H. G.
December 10	M in a diamond G L on top or nil	...	1	Cask empty ...	S.S. "Dalmatia." ...	H. G.
„ 10	G L Mullick & Co	...	1	Ditto ...	Ditto ...	H. G.
„ 20	No mark	...	2	Bags sugar ...	S.S. "Alberto Treves."	
„ 20	Ditto	...	3	Kegs sulpur ...	Ditto ...	H G.
„ 20	Ditto	...	8	Ditto (broken and empty).	Ditto ...	H. G.
1905.						
January 16	Ditto	...	1	Bag sugar (torn) ...	S.S. "Manin."	
„ 16	Ditto	...	1	Keg sulphur ...	Ditto ...	H. G.
March 6	Ditto	...	1	Pot cheese ...	S.S. "Sunda."	
1904.	*Withdrawn from last sale.*					
May 26	P M & Co	...	1	Bundle sheet iron ...	S.S. "Langdale"	
„ 26	B B in a heart, "unclaimed cargo" on top.	...	1	Do. plate ...	Ditto.	
September 9	H	...	1	Bar, flat ...	S.S. "Wensleydale."	

Date of removal.	Marks.	No.	Quantity.	Description.	Vessel's name.	Remarks.
1904	SHED No. 4—*concluded.* *Withdrawn from last sale*—concld.					
September 9	Nil	...	2	Bars steel wedger ...	S.S. "Wensleydale."	
,, 9	Do.	...	2	Pieces tools or crow-bars.	Ditto.	
,, 9	Do.	...	2	Bags ground nuts ...	Ditto.	
,, 9	Do.	...	2	Casks cement ...	Ditto.	
,, 9	Do.	...	1	Bundle G. C. sheet	Ditto.	
	SHED No. 5.					
November 7	M S P or nil	...	2	Joists ...	S.S. "Trautenfels."	
,, 7	P S A C C	...	1	Bundle shooks ...	Ditto.	
,, 7	R C & C F	2426	1	Case	Ditto	
,, 7	2 and 7 on top of W and 5 below it	..	1	Keg red lead ...	Ditto.	
,, 7	Nil	...	...	A quantity of broken fire-bricks.	S.S. "Reichenfels."	
,, 7	S E Zirmund or S E Zemin & Co	...	1	Case	Ditto.	
,, 19	G W B & Co in a triangle or G W B & Co in a triangle, T and C on sides.	8503	1	Cask (broken) ...	S.S. "City of York."	
,, 19	No mark	...	8	Broken pieces tiles or fire-clay covers.	Ditto.	
,, 26	621 in a triangle, A on left side or nil.	...	2	Bindles G. C. sheets	S.S. "Workman."	
December 15	Green Red or Bengal Prov. P. W. D.	...	6	Bars tea iron ...	S.S. "Clan Camiron."	
,, 15	No mark	...	1	Bag cement ...	Ditto.	
,, 24	White or X X X white or V V white.	...	1	Bundle square ...	S.S. "Tannenfels."	
,, 24	K F	2379-80	2	Cases	Ditto.	
,, 24	No mark	...	1	Cask cement ...	Ditto.	
1905.						
January 2	Ramsay	...	6	Firebricks ...	S.S. "Werdenfels."	
,, 5	G I & Co. in a triangle, or G I & Co. in a triangle, C & B below.	...	1	Case	S.S. "Muttra."	
,, 5	or no mark	...	...	A quantity of broken firebricks.	Ditto.	
,, 5	I S R or nil, E Bengal ...	...	5	Broken pipes ...	Ditto.	
,, 5	Ditto ...	...	24	Do. spikes ...	Ditto.	
,, 5	K T & in a triangle, or nil or K F in a triangle.	...	4	Do. pipes ...	Ditto.	
,, 5	717 & in an inverted triangle, M Co. on side.	81	1	Case	Ditto.	
,, 5	No mark	...	3	Casks cement ...	Ditto.	
,, 5	Ditto or H F R ...	...	1	Cask do. ...	Ditto.	

Date of removal.	Marks.	No.	Quantity.	Description.	Vessel's name.	Remarks.
1905.	SHED No. 5—*concluded.*					
January 10	No mark	...	1	Bag Nux Vomica ...	S.S. "Clan Urquhart."	
„ 10	↑ Milty. Roads & Buildings Oudh or nil.	...	2	Broken cast iron pipes.	Ditto.	
„ 17	1491 in a diamond, E S. on top ...	...	1	Keg ...	S.S. "Craftsman."	
„ 17	No mark or Martin & Co. ...	...	1	Bag label ...	Ditto.	
„ 17	No mark	...	...	A quantity of broken firebricks.	Ditto.	
„ 20	II Green	...	33	Bundles fish plates	S.S. "Wildenfels."	
1904.	SHED No. 6.					
November 4	↑ Ordnance Factory Cossipore ...	...	376	Firebricks ...	S.S. "Clan Mackenzie."	
„ 4	No mark	...	...	A quantity of broken firebricks.	Ditto.	
	SHED No. 7.					
November 12	No mark	...	1	Cast-iron pipe (broken).	S.S. "City of Corinth."	
„ 29	M S P C or M S P C, 2024 ...	...	1	Joist	S.S. "Planet Venus."	
„ 24	Messrs Kundoo & Co. ...	...	1	Parcel	S.S. "Sardinia."	
„ 24	Messrs S Sunder & Co. ...	...	1	Do.	Ditto.	
„ 24	M P	...	1	Joist	Ditto.	
December 6	S S Sheirly in a triangle ...	...	1	Package or cask (broken).	S.S. "Sunda."	
„ 22	No mark or ↑ Ishapur ...	...	...	A quantity of broken firebricks=75 whole pieces.	S.S. "City of Athens."	
1905.						
January 5	J S & Co.	4	1	C. I. pipe (broken)	S.S. "Syria."	
„ 5	C J I C in a diamond, J J on top, G S below, and the whole in a block, Benares.	4-5	2	Cases	Ditto.	
„ 18	↑ Ord Factory, Ishapur ...	...	5	Broken pieces firebricks.	S.S. "Assyria."	
„ 27	No mark	...	1	Bar flat iron ...	S.S. "Clan Chattan."	
„ 27	L L in a diamond	239, 241, 243	3	Cases	Ditto.	
„ 27	No mark	...	1	Piece R.-W. pipes ...	Ditto.	
„ 27	A A & Co in a block or nil ...	...	6	Casks broken and empty.	Ditto.	

Date of removal.	Marks.	No.	Quantity.	Description.	Vessel's name.	Remarks.
1904.	SHED No. 7—*concluded.* *Withdrawn from last sale.*					
August 20	or no mark	...	5	Casks cement ...	S.S. "Golconda."	
September 19	P S in a diamond, W R on top, Sues below.	77	1	Case	S.S. "Goorkha."	
October 8	J P or nil	...	8	R.-W. pipes ...	S.S. "City of Edinburgh."	
	SHED No. 8.					
November 8	M P or nil	...	1	Joist	S.S. "Sumatra."	
„ 8	Nil	...	3	Pieces battery rope	Ditto.	
„ 23	J A & Co	X B	1	Case	S.S. "Patrician."	
December 3	R in a diamond	2	1	Drum	S.S. "City of Madras."	
„ 3	No mark or C in a diamond ...	...	1	Bag M'dise ...	Ditto.	
„ 15	No mark	...	1	Cask cement ...	S.S. "Golconda."	
„ 15	Ditto	...	1	Plate	Ditto.	
„ 15	Ditto	...	1	Coil hoop iron ...	Ditto.	
„ 15	Ditto	..	2	Drums varnish ...	Ditto.	
1905.						
January 4	No mark	...	4	R. W. pipes ...	S.S. "City of Calcutta."	
„ 4	Ditto or 8190 in a diamond, A C on top, or & Co below.	...	2	Ditto ...	Ditto.	
„ 4	B in a triangle, J S on sides or nil	...	3	Pieces R. W. pipes	Ditto.	
„ 4	C in a diamond, B & Co or I B & Co.	...	2	Bundles steel flat ...	Ditto.	
„ 4	I G N R	...	1	Boiler tube ...	Ditto.	
„ 4	H White or IIII white or III white.	...	2	Bars flat ...	Ditto.	
„ 4	G. L. Mullick or nil	...	1	Case or parcel ...	Ditto.	
„ 4	No mark	...	2	Pieces coal shovel ...	Ditto.	
„ 4	Ditto	...	1	Piece red cloth ...	Ditto.	
„ 4	Ditto	...	1	Bundle twist ...	Ditto.	
„ 13	Rev. K. P. Ghose or Messrs. K. P. Ghose & Co.	...	1	Package ...	S.S. "Palermo."	
„ 13	Harton & Co	...	1	Parcel	Ditto.	
1904.	*Withdrawn from last sale.*					
September 17	M Pondichery	...	1	Case	S.S. "Clan Urquhart."	
„ 26	J F C or J F & C	28 R	1	Do.	S.S. "Rabenfels."	

Date of removal.	Marks.	No.	Quantity.	Description.	Vessel's name.	Remarks.
1905.	*Unidentified goods.*					
March 24	No mark	...	1	Cask steel rod cuttings or pins.	.....	K. P. Dock.
January 6	Ditto	...	4	Pieces pig iron.		
20	Ditto	...	3	„ iron.		
	Ditto	...	...	A quantity of loose tin and tin plates.		
	Ditto	...	8	Broken pieces spelter.		
	Ditto	...	40	Bars flat iron.		
	Ditto	...	35	„ round iron.		
	Ditto	...	5	„ tee iron.		
	Ditto	...	3	Bundles hoop.		
	Ditto	...	2	„ flat.		
	Ditto	...	4	„ rod.		
	Ditto	...	1	Coil copper wire.		
	Ditto	...	...	A quantity of staves and planks.		

Port Commissioners' Office, Calcutta, the 18th May 1905.

C. H. WINDLE, Traffic Manager, Port Commrs.

(590—1)

Abstract of the Partition Fund of district Mymensingh for the year 1904-05 prepared as required by section 42, Act V (B.C.), 1897.

	Rs.	A.	P.
Balance at credit of the Fund on the 1st April 1904 ...	12,617	13	2
Receipts for the year	25,379	9	10
Disbursements during the year	17,212	11	1
Balance at credit on the 31st March 1905	20,784	11	11

W. B. THOMSON, Collector.

Mymensingh Collectorate, the 9th May 1905.

(582—1)

FORM No. II.

INSTRUCTIONS 97 AND 120.

Abstract of the Estates Partition Fund of district Shahabad for the year 1904-05.

[Prepared as required by section 42, Act V (B.C.) of 1897.]

	Rs.	A.	P.
Balance at credit of the Fund on 1st April 1904	32,172	8	0
Receipt for the year 1904-05	7,360	10	11
Disbursements during the year 1904-05	25,126	4	6
Balance at credit on 31st March 1905	14,406	14	5

R. K. BAHADUR, Batwara Deputy Collector.

G. MILNE, Collector.

Arrah, the 19th May 1905.

(595—1)

In the Court of Rai Aswani Kumar Guha, Bahadur, Subordinate Judge, 1st Court, Patna.

EXECUTION CASE No. 78 OF 1905.

Mosamat Wajihunnissa Begum, decree-holder, *versus* Kedar Nath and others, judgement-debtors.

THE following properties of the above named judgement-debtors will be sold by the Nazir of the District Judge's Court at Bankipore on the 19th day of June 1905 at 6 A.M. for realisation of the judgment-debt the sum of Rs. 56,742-12-9 only in the above execution case:—

Serial No.	Tauzi No.	Name of the village.	Sadar jama.	Share to be sold.	Pargana.	Sub-District.	Thana.	District.	Approximate value.
1	265 Tauzi.	Mauza Rosulpur Labsoona ..	Rs. A. P. 844 11 6	10 annas out of 16 annas.	Balia ...	Masoudhi ...	Masoudhi ...	Patna ..	Rs. 50,000

Bankipore, the 17th May 1905.

ASWANI KUMAR GUHA, Subordinate Judge.

(591—1)

Notice.

PURSUANT to the orders of Government, dated the 29th June 1881, particulars of the undernoted items of articles held by the Port Commissioners as Receivers of Wrecks, each article being of value above Rs. 100, are published for general information in accordance with the provisions of section 76, Act VII of 1880:—

Date.	Recovery No.	Description of articles.	Weight.	Approximate value.	Where recovered.	Where lying.
1905. May 6th ...	2 P.A.	Chain, 2" of 17 fathoms ...	Cwt. qrs lbs. 36 2 9	Rs. 146	Poojali ...	On board the *Vulcan*, A.-V.

F. A. LOVELL, *for* Deputy Conservator.

Port Commissioners' Office, Calcutta, the 6th May 1905. (586—3)

SALE PROCLAMATION.

In the Court of the District Judge of Midnapore.

EXECUTION CASE No. 4 OF 1905.

Delsuk Roy of No. 3 Kalakar Street, Calcutta, decree-holder *versus* Prince Mahammed Bukhtyar Sah, C.I.E. of Tallyganj, Calcutta, judgement-debtor.

THE mining rights of the undermentioned estate, with the exception of the following garhs and lands and temples dedicated to certain gods and goddesses, will be sold by the Nazir of the District Judge's Court, Midnapore, in his sale-room at 6 A.M. on the 15th June 1905 for recovery of Rs. 10,959-13 subject to—

(1) The lease of Messrs. Gillanders, Arbuthnot & Co. of the mining rights of some of the mauzas in the estate and for which the judgement-debtor receives rent, etc., from the Company.

(2) The mortgage of Babu Kanai Lall Khan of No. 118 Benatolla Street, Calcutta, for Rs. 8,018-2-9; and

(3) The mortgage of Bijoy Chandra Singha of No. 146 Baranoshi Ghose's Street, Calcutta, for Rs. 17,164-13-6.

Be it stated that the judgement-debtor is by terms of his lease, liable to pay an annual sum of Rs. 2,000 as royalty to the lessor if he does not commence mining operations and sale of the mineral produce taken out before January 1906.

(1) *Estate Dhalbhum*, i.e., parganas Ghatsila, approximate area 1,100 square miles, partly within pargana Singhbhum thana Ghatsila, sub-registry and chowki Chaibassa and partly within the district of Midnapore, thana and sub-registry Jhargram.

Boundary.—On the north by Sildah pargana in the Midnapore district and Barabhum in the Manbhum district, on the east by parganas Nayabasan, Belabaria, Jamboni and Sildah in the Midnapore district, on the south by Moburbhanja in the district of Cuttack and on the west by pargana Samnikola in the district of Singhbhum. Approximate value Rs. 1,00,000.

List of garhs and temples and places dedicated to certain Gods and Goddesses.

(1) Ghatsila garh, approximate area 300 bighas.
(2) Nursingha garh, approximate area 500 bighas.
(3) The land occupied by Rankini Debi in mauza garh Roghunathpore, approximate area 10 bighas.
(4) The land occupied by Mohadeb Jew in mauza garh Roghunathpore, approximate area 15 bighas.
(5) The land occupied by Kapileswar Jew in mauza Kokpara, approximate area 15 bighas.
(6) The land occupied by Rankini Debi in mauza Kokpara, approximate area 10 bighas.
(7) The land occupied by Sarnaboti Debi Thakurani, in mauza Kosarda, approximate area 10 bighas.
(8) The land occupied by Kaneswar Jew in mauza Kamar Ara, approximate area 25 bighas.
(9) The land occupied by Jagannath Jew in mauza Baharegora, appoximate area 25 bighas
(10) The land occupied by Mohasambhu Jew in mauza Chetreswar, taraf Parulya, approximate area 25 bighas.
(11) The land occupied by Jagannath Jew in mauza Nai Jangle, approximate area 25 bighas.
(12) The land occupied by Bhutnath Jew in mauza Goda, approximate area 10 bighas.
(13) The land occupied by Rankini Debi in mauza Bond, taraf Parihati, approximate area 1½ bighas.
(14) The land occupied by Rankini Debi in mauza Chakulya, approximate area 10 bighas.
(15) The land occupied by Kanai Sah Jew, approximate area 20 bighas.
(16) The land occupied by Gottasara Jew in mauza Metya, Bandi taraf, approximate area 20 bighas.
(17) The land occupied by Bhairab Chand Jew in mauza Dompara taraf, approximate area 50 bighas.
(18) The land occupied by Jagannath Jew in mauza Saramda, taraf Haldipukur, approximate area 10 bighas.
(19) The land occupied by Mahadeb Jew in mauza Haldipukur, approximate area 10 bighas.
(20) The land occupied by Rankini Debi, in mauza Haldipukur, approximate area 10 bighas.

(21) The land occupied by Telaipat Debi, approximate area 10 bighas.

(22) The land occupied by Chandan Behar Jew in mauza Harina, approximate area 20 bighas.

(23) The land occupied by Roghunath Jew in mauza Karansai, taraf Alkosi, approximate area 25 bighas.

E. G. DRAKE-BROCKMAN,
District Judge, Midnapore.

Midnapore, the 19th May 1905. (588—1)

NOTICE.

In the Court of the 3rd Munsif at Bagerhat, district Khulna.

MONEY EXECUTION CASE No. 109 OF 1905.

Sarada Charan Mukerjee, decree-holder, *versus* Lal Gopal Dutt Choudhuri and others, judgement-debtors.

THE following property of the judgement-debtor Nos. 1 to 7 will be sold at the public auction on the 19th June at 12 o'clock noon by the Nazir of this Court, in the sale-room at Bagerhat for the realization of Rs. 746-5-3 due to the decree-holder:—

Two annas 14 gandas share of zamindari bearing tauzi No. 172 of the Collectorate Khulna, pargana Sultanpur Khararia, the amount of revenue payable for the said tauzi being Rs. 2,392-1-1.

B. K. BISWAS, Offg. Munsif.

Bagerhat, the 12th May 1905. (583—1)

In the Court of the Subordinate Judge, 1st Court, Chapra.

EXECUTION CASE No. 52 OF 1905.

Maulvi Imdad Hussain, decree-holder, *versus* Babu Raja Ram and others, judgement-debtors.

THE right, title and interest of the judgement-debtors will be sold on the 6th June 1905 by this Court, and the descriptions of the properties to be sold are as follows:—

Tauzi No.	Jama Sadar of Entire estate.	Jama Sadar of khola.		Estimated value.
3612	Rs. A. P. 1,339 8 8	Rs. A. P. 928 2 4	Twelve annas share of the judgement-debtor Babu Raja Ram and Babu Saligram, minor, through Babu Raja Ram, guardian, of mauza Manjhi Phat Kalan, pargana Manjhi, mahal Manjhi, thana Manjhi, Munsif Chapra, Sub-Registry Office Ekma, without encumbrance.	Rs. 500

SARADAPRASAD BASU,
Offg. 1st Sub-Judge, Chapra.

Chapra, the 16th May 1905. (587—1)

SALE PROCLAMATION.

In the Court of Babu Nundo Lal Dey, Subordinate, 1st Court, Bhagalpur.

T. EX. N CASE No. 277 OF 1905.

Debi Prosad M[illegible]142 Ari, decree-holder, *versus* Narsingh Mohun Thakur —d others, judgement-debtors.

THE following properties shall be sold by the Nazir of the District Court on the 19th June 1905 at 12 noon for the realization of Rs. 1,35,081-11:—

1. Eight annas of taluqa Gorgawan, pargana Bhagalpur, asli and dakhli, No. 5093, tauzi and sadar jama Rs. 329-4 in the district of Bhagalpur. Estimated value Rs. 9,000.

2. Four annas of Marar Rusoke with Julker and Bhasaundha, asli and dakhli, pargana Pharkia in the district of Monghyr, No. 552, tauzi and sadar jama Rs. 691-13. Estimated value Rs. 25,000.

3. Kist 8th of Akbar Nagar to the extent of 4 annas share, asli and dakhli, pargana Bhagalpur in the district of Bhagalpur, No. 4664, tauzi and sadar jama Rs. 143-12. Estimated value Rs. 9,000.

4. Four annas share of Kismut 1st Powai, asli and dakhli, pargana Bhagalpur, in the district of Bhagalpur, No. 18, tauzi and sadar jama Rs. 381-14. Estimated value Rs 3,000.

5. Three annas 5 pies share in Kismut 2nd Powai, asli and dakhli, pargana Bhagalpur in the district of Bhagalpur, No. 4290, tauzi and sadar jama Rs. 391-6. Estimated value Rs. 2,500.

6. Four annas of Kismut 1st Powai, asli and dakhli, pargana Bhagalpur in the district of Bhagalpur, No. 4291, tauzi and sadar jama Rs. 127-4. Estimated value Rs. 2,000.

NUNDO LAL DEY, Subordinate Judge.

Bhagalpur, the 17th May 1905. (589—1)

Treasure Trove.

IT is hereby notified under section 5 of Act VI of 1878, that on or about the 28th December 1904, one Kalian, a Panchama, found a brass case containing 98 small gold coins, valued at Rs. 12-4-9, while he and two other men were digging in S. No. 22A, Easanur village, Negapatam taluq, classed as jari in settlement and said to belong to Subba Naick of the village.

2. All persons claiming the said treasure or part thereof, are hereby required to appear personally or by agent before the Collector of Tanjore, at his office on the 6th day of November 1905, in view to the matter being enquired into and determined according to law.

, for Acting Collector.

Tanjore Collector's Office, the 16th May 1905.

Notice.

SEPARATE sealed tenders in Form No. 2 are invited for the following works. They will be received up to the noon of 31st May 1905. Plans and estimates can be seen in the office of the undersigned during office hours. An earnest-money of Rs. 50 for each of the following works should be credited into the Howrah Treasury and the challan should accompany each tender:—

	Rs.
(1) Repairs to Amta-Jhinkra road ...	800
(2) Repairs to Bagnan-Mankoor road ...	800
(3) Repairs to Duke road ...	1,000
(4) Construction of a foot-bridge at Panpur	1,145
(5) Widening Andul Station Road ...	1,000

GANENDRA NATH GANGULY, Dist. Engineer.

Howrah District Board, the 17th May 1905.

(585—2)

Notice.

List of unclaimed goods lying in the Custom House Wharf.

Vessel.	Mark and No.	Description of packages.
S. S. "Neuenfels"	M. H. 1768	1 case air-guns and ammunition.

The above package will be disposed of, if not cleared on or before the 14th June 1905, under section 88, Sea Customs Act,

B. FOLEY,
Offg. Collector of Customs.

Custom House, Calcutta, the 20th May 1905.

Notice.

WANTED a Lecturer on Annuities and Insurance for the Evening classes in connection with Commercial Education in the Presidency College on an allowance of Rs. 1,500 a year.

Preference will be given to a person who is employed in an Insurance Office.

Applications with copies of testimonials will be received by the undersigned on or before the 20th June 1905.

P. K RAY,
Offg. Principal, Presidency College.

Presidency College, Calcutta, the 16th May 1905.

Wanted

A CIVIL VETERINARY ASSISTANT for the Angul District and three Wards Tributary States Salary Rs. 50, personal allowance Rs. 10, and fixed travelling allowance Rs. 15 per month. Applications with copies of testimonials to be submitted before the 15th June 1905.

Applicants to state age.

R. McLEOD SMITH, Deputy Commissioner.

Angul, Orissa, the 16th May 1905.

Wanted

AN experienced draftsman on Rs. 30 to Rs. 40 a month according to qualifications. Candidates should state age, qualifications, past services, and present pay, and submit copies of their certificates. Selected candidates will have to produce their drawings when required.

Preference will be given to one having long experience of railway land acquisition work. Apply immediately to

The Special Land Acquisition Deputy Collector,
Bhagalpur.

Camp Supoul, the 19th May 1905.

Wanted

SOME experienced amins on Rs. 20 a month and travelling allowance according to Civil Service Regulations. The candidates must know English and Hindi, and write a good hand and be able to extract areas accurately by tale square. Applications with copies of certificates (all in the candidate's own handwriting) should be made at once to

The Special Land Acquisition Deputy Collector,
Bhagalpur.

Camp Supoul, the 19th May 1905.

Wanted

A CASHIER on Rs. 25 a month and travelling allowance according to Civil Service Regulations. The selected candidate should give security in Rs. 2,000 in cash or Government promissory notes.

Applications with copies of certificates of respectability and qualifications in the candidate's own handwriting should be made to

The Special Land Acquisition Deputy Collector,
Bhagalpur.

Camp Supoul, the 19th May 1905.

WANTED two Sub-Overseers for the Saran District Board on a monthly salary of Rs. 30, plus travelling allowance of Rs. 10 each for six months.

None need apply who is not qualified under paragraph 3 (*a*) or (*b*) of the B. G. No. 3334L.S.-G., dated 20th December 1901.

Applications with copies of testimonials will be received by the undersigned up to 30th May 1905.

E. J. BULL,
District Engineer, Saran.

Chapra, the 13th May 1905. (594—1)

Notice

WANTED by the District Board of Burdwan—

(*a*) A passed Accountant having experience in District Engineers' and P. W. D. accounts, on a salary of Rs. 80 rising to Rs. 100 by an annual increment of Rs. 3.

(*b*) An Overseer on a salary of Rs. 50 and horse allowance of Rs. 15. He must be qualified under rule 7 (2) of Part IX.

(*c*) A Sub-Overseer on a salary of Rs. 30 and travelling allowance of Rs. 10. He must be qualified under rule 7 (3) of Part IX.

Applications with copies of testimonials will be received by the undersigned up to 15th June next.

HARI DAS PAL, B.C.E.,
District Engineer, Burdwan.

District Engineer's Office, Burdwan, the 20th May 1905 (592—2)

WANTED a fourth teacher for the Pabna Technical School on a salary of Rs. 30 per month. Candidates must be passed Sub-Overseers and have good knowledge of drawing and surveying. Preference will be given to one having practical acquaintance with extensive cadastral surveys and experience as a teacher.

Applications will be received up to the 10th proximo.

F. W. WARD,
Chairman, District Board.

Pabna, the 19th May 1905. (593—1)

WANTED by the District Board, Backergunge, an Overseer on Rs. 70 to Rs. 80 a month, according to qualifications, exclusive of travelling allowance. None need apply who is not duly qualified and has no experience in works. Apply within 29th instant.

JOGENDRO NATH GHOSE, A.M.I.C.E.,
District Engineer, Backergunge.

Barisal, the 8th May 1905. (527—2)

WANTED an experienced Correspondence Clerk for the District Engineer's Office, Saran, on a salary of Rs. 35 a month rising to Rs. 45 by biennial increment of Rs. 2. None need apply who has not occupied a similar post.

Applications in the applicant's own handwriting will be received by the undersigned up to 30th May 1905.

B. GUPTA, *Acct.*,
for District Engineer, Saran.

Chapra, the 8th May 1905. (539—2)

Wanted

A SUB-INSPECTOR of Schools, on a salary of Rs. 50 per month and travelling allowance admissible under the Civil Service Regulations. None need apply who is not qualified under the rules. Preference will be given to a qualified Muhammadan.

Applications accompanied by a statement prescribed by the Board duly filled up should reach the undersigned on or before the 24th May 1905. The form of statement will be supplied to the applicant free of cost on application.

W. B. THOMSON, Chairman, District Board.

Mymensingh District Board's Office, the 10th May 1905. (541—2)

WANTED a Sanitary Inspector for the Rampore Boalia Municipality on a salary of Rs. 25 per mensem and horse allowance Rs. 5. None need apply who is not a passed Sub-Overseer. The selected candidate will have to furnish a cash security of Rs. 25. Applications will be received by the undersigned up to the 27th instant.

RAM CHANDRA RAY,
Vice-Chairman, Rampur Boalia Municipality.

Boalia, the 11th May 1905. (546—2)

WANTED by the District Board of Birbhum an Assistant Accountant on a monthly salary of Rs. 40 rising to Rs. 50 by annual increment of Rs. 2 after confirmation. None need apply who has not passed the fourth grade Accountantship of the Public Works Department.

Applications will be received up to the 25th May 1905.

S. C. MUKERJEE,
Chairman, District Board, Birbhum.

Birbhum District Board's Office, the 12th May 1905.

(549—2)

Notice.

WANTED An Assistant Accountant for the Road Cess Committee, Singhbhum, on Rs. 30 per month. Preference will be given to one who has some knowledge of accounts of any Government Office.

Applications will be received by the undersigned up to the 28th current.

The candidate selected will have to join at once.

MOHINI MOHAN GHOSH,
Vice-Chairman, D. R. C. C., Singhbhum,

Dated Chaibassa, the 14th May 1905. (550—2)

Wanted

FOR the Office of the Rangpur District Board a Clerk on a salary of Rs. 25 per month. None need apply who has not passed the Entrance Examination of the Calcutta University and cannot write a good hand. Preference will be given to an F.A. with office experience. Applications will be received by the undersigned up to 30th May 1905.

BHABANI PROSANNA LAHIRI,
Vice-Chairman, District Board, Rangpur.

Rangpur District Board's Office, the 12th May 1905.

(579— 2)

Lost

THE Government Promissory Note No. 011267 of the 3½ per cent. loan of 1865 for Rs. 500 originally standing in the name of Shukhada Moyee Debi, and last endorsed to Srimati Aekori Debee, the proprietress, by whom it was never endorsed to any other person, having been lost, notice is hereby given that payment of the above note and the interest thereupon have been stopped at the Public Debt Office, Bank of Bengal, Calcutta, and that application is about to be made for the issue of duplicate in favour of the proprietress. The public are cautioned against purchasing or otherwise dealing with the abovementioned security.

Name of Advertiser—Sattaendra Nath Mookherjee.
Residence—Digsui, thana Ballagarh, Hooghly.

(197—3—318)

Lost.

THE Government Promissory Note No. 044245 of the 3½ per cent. of 1900-01 for Rs. 100, originally standing in the name of Prosad Das Boral and Brothers, and last endorsed to Sreemoti Nirmala Nalini Dassy, the proprietress, by whom it was never endorsed to any other person, having been lost, notice is hereby given that payment of the above note and interest thereupon have been stopped at the Public Debt Office, Bank of Bengal, Calcutta, and that application is about to be made for the issue of duplicate in favour of the proprietress. The public are cautioned against purchasing or otherwise dealing with the abovementioned security.

Name of the advertiser—Charu Chandra Das.
Residence—142 Amherst Street. (515—3—316)

ATUL KRISHNA RAY, Pleader, Alipur, intends to be enrolled as a Vakil, High Court, Calcutta.

(578—4—339)

NAGENDRA NATH MUKHOPADHYAYA, M.A., B.L., intends to be enrolled as a Vakeel of the High Court, Calcutta. (514—4—317)

To the Debenture-holders of the Central Jute Mills Co., Ld.

NOTICE is hereby given that 267 debentures of Rs. 500 each will be redeemed on the 1st January 1906.

This notice cancels the notice issued on 23rd December 1904 and which appeared in this Gazette on 11th January 1905.

By order of the Board,
ANDREW YULE & Co.,
Managing Agents.

7 Clive Row, Calcutta, the 17th May 1905.

(584—1—341)

Estate Marian Martha Arabella Gouldsbury, deceased, wife of Colonel D. E. Gouldsbury.

NOTICE is hereby given that all creditors and other persons having any claims against the estate of the deceased abovenamed are hereby required to send in writing the particulars thereof to Messrs. King, Hamilton & Co., 7 Hare Street, Calcutta, on or before the 10th day of July 1905, after which date the undersigned will distribute the assets of the estate of the said deceased among the parties entitled thereto having regard to the claims of which he has then had notice.

And notice is hereby further given that the undersigned will not be liable for the assets or any part thereof so distributed to any person of whose claim he shall not have had notice at the time of such distribution.

A. J. KER,
Administrator with Will annexed of the Property and Credits of the deceased,
7 Hare Street, Calcutta.

Dated this 23rd day of May 1905. (598—3)

Estate Reverend George Martin Wilson, deceased, of Heavitree, Devonshire, England.

NOTICE is hereby given that all creditors and other persons having any claims against the estate of the deceased abovenamed are hereby required to send in writing the particulars thereof to Messrs. King, Hamilton & Co., 7 Hare Street, Calcutta, on or before the 22nd day of June 1905, after which date the undersigned will distribute the assets of the estate of the said deceased among the parties entitled thereto having regard to the claims of which he has then had notice.

And notice is hereby further given that the undersigned will not be liable for the assets or any part thereof so distributed to any person of whose claim he shall not have had notice at the time of such distribution.

Dated this 3rd day of May 1905.

A. J. KER,
Administrator with Will annexed of the Property and Credits of the deceased.

7 Hare Street, Calcutta. (508—3—321)

INSOLVENT NOTICES.

In the matter of JACOB ABRAHAM, an insolvent.

On Tuesday, the 2nd day of May instant, it was ordered that Tuesday, the 6th day of June next, be appointed for the further hearing of this matter, and that unless cause be shown to the contrary on that day the said insolvent be discharged personally as well as to his after acquired property from all liabilities for debts, claims and demands of and against the said insolvent at the time of the filing of his petition for relief.

Insolvent in person. (596—2)

In the matter of JAMES WILLOUGHBY D'SOUZA, an insolvent.

On Tuesday, the 9th day of May 1905, it was ordered that this matter be set down for hearing on Tuesday, the 6th day of June next, with liberty to the said insolvent at the said hearing to apply that the order for the personal discharge of the said insolvent, dated the 5th day of May 1894, be revoked; and that the petition seeking for relief filed in this matter on the 19th December 1893 be withdrawn and the vesting order made thereon be discharged.

C. C. Bose, Attorney. (597—1)

In the matter of KAMINI MOHANA BASU, an insolvent.

Notice that an application for an *ad interim* protection order has been this day made by the said insolvent and that such application will be heard and disposed of by the Acting Commissioner of the Insolvent Court on Monday, the 29th day of May instant, at the hour of half past ten o'clock in the forenoon.

☞ Any creditor of the said insolvent desirous of opposing such application must appear before the said Court at the time and place aforesaid.

Insolvent in person. (599—1)

In the matter of CHOUT MULL and RAM BULLOV, insolvents.

On Saturday, the 25th day of March last, it was ordered that the matters of the petition of the said insolvents be heard on Tuesday, the 6th day of June next, and that the said insolvents do then attend to be examined before the said Court.

Insolvents in person. (551—2)

In the matter of SHAIK JAFFER and ABDUL BARICK, insolvents.

On Saturday, the 29th day of April last, it was ordered that the matters of the petition of the said insolvents be heard on Tuesday, the 6th day of June next, and that the said insolvents do then attend to be examined before the said Court.

P. N. Paul, Attorney. (552—2)

In the matter of AMOLUCK CHAND LOHURA, an insolvent.

On Tuesday, the 28th day of March last, it was ordered that the matters of the petition of the said insolvent be heard on Tuesday, the 6th day of June next, and that the said insolvent do then attend to be examined before the said Court.

Manuel and Augurwallah, Attorneys. (553—2)

In the matter of TOOLAI NEEPON, an insolvent.

On Monday, the 17th day of April last, it was ordered that the matters of the petition of the said insolvent be heard on Tuesday, the 6th day of June next, and that the said insolvent do then attend to be examined before the said Court.

K. M. Rukshit, Attorney. (554—2)

In the matter of EDITH DEAM, an insolvent.

On Friday, the 14th day of April last, it was ordered that the matters of the petition of the said insolvent be heard on Tuesday, the 6th day of June next, and that the said insolvent do then attend to be examined before the said Court.

Insolvent in person. (555—2)

In the matter of ABUL FATTEH MAHOMED ABDUL HAFIZ, an insolvent.

On Tuesday, the 11th day of April last, it was ordered that the matters of the petition of the said insolvent be heard on Tuesday, the 6th day of June next, and that the said insolvent do then attend to be examined before the said Court.

Md. Sultan Alum, Attorney. (556—2)

In the matter of PROMOTHO NATH MOOKERJEE, an insolvent.

On Tuesday, the 28th day of March last, it was ordered that the matters of the petition of the said insolvent be heard on Tuesday, the 6th day of June next, and that the said insolvent do then attend to be examined before the said Court.

Insolvent in person. (557—2)

In the matter of CHARLES ROSSITER, an insolvent.

On Tuesday, the 14th day of March last, it was ordered that the matters of the petition of the said insolvent be heard on Tuesday, the 6th day of June next, and that the said insolvent do then attend to be examined before the said Court.

J. N. Chatterjee, Attorney. (558—2)

In the matter of JOHN BERRYMAN, an insolvent.

On Wednesday, the 29th day of March last, it was ordered that the matters of the petition of the said insolvent be heard on Tuesday, the 6th day of June next, and that the said insolvent do then attend to be examined before the said Court.

Insolvent in person. (559—2)

In the matter of NARAIN DASS BANNERJEE, an insolvent.

On Saturday, the 8th day of April last, it was ordered that the matters of the petition of the said insolvent be heard on Tuesday, the 6th day of June next, and that the said insolvent do then attend to be examined before the said Court.

A. K. Thakur, Attorney. (560—2)

In the matter of PERCY JOHN SHERMAN, an insolvent.

On Saturday, the 8th day of April last, it was ordered that the matters of the petition of the said insolvent be heard on Tuesday, the 6th day of June next, and that the said insolvent do then attend to be examined before the said Court.

Swinhoe & Co., Attorneys. (561—2)

In the matter of GEORGE FRANK ALEXANDER *alias* GEORGE FREDERICK ALEXANDER, an insolvent.

On Thursday, the 6th day of April last, it was ordered that the matters of the petition of the said insolvent be heard on Tuesday, the 6th day of June next, and that the said insolvent do then attend to be examined before the said Court.

H. C. Ghose, Attorney. (562—2)

In the matter of RAM NATH [illegible] an insolvent.

On Tuesday, the 11th day of April last, it was ordered that the matters of the petition of the said insolvent be heard on Tuesday, the 6th day of June next, and that the said insolvent do then attend to be examined before the said Court.

S. C. Mitter, Attorney. (563—2)

In the matter of EDWIN BLUETT, an insolvent.

On Friday, the 14th day of April last, it was ordered that the matters of the petition of the said insolvent be heard on Tuesday, the 6th day of June next, and that the said insolvent do then attend to be examined before the said Court.

Insolvent in person. (564—2)

In the matter of CHEDILALL AGARWALLA, an insolvent.

On Saturday, the 29th day of April last, it was ordered that the matters of the petition of the said insolvent be heard on Tuesday, the 6th day of June next, and that the said insolvent do then attend to be examined before the said Court.

C. C. Mitter, Attorney. (565—2)

In the matter of H. H. ARDWISE, an insolvent.

On Monday, the 17th day of April last, it was ordered that the matters of the petition of the said insolvent be heard on Tuesday, the 6th day of June next, and that the said insolvent do then attend to be examined before the said Court.

G. C. Chunder & Co., Attorneys. (566—2)

In the matter of HARI PADA DAS SEN, an insolvent.

On Wednesday, the 19th day of April last, it was ordered that the matters of the petition of the said insolvent be heard on Tuesday, the 6th day of June next, and that the said insolvent do then attend to be examined before the said Court.

J. N. Mitter, Attorney. (567—2)

In the matter of WILLIAM ST. A. JORDAN, an insolvent.

On Thursday, the 27th day of April last, it was ordered that the matters of the petition of the said insolvent be heard on Tuesday, the 6th day of June next, and that the said insolvent do then attend to be examined before the said Court.

Insolvent in person. (568—2)

In the matter of ABDUL MAJID, an insolvent.

On Wednesday, the 19th day of April last, it was ordered that the matters of the petition of the said insolvent be heard on Tuesday, the 6th day of June next, and that the said insolvent do then attend to be examined before the said Court.

Fox and Mandal, Attorneys. (569—2)

In the matter of MANICK CHUNDER PYNE, an insolvent.

On Tuesday, the 4th day of April last, it was ordered that the matters of the petition of the said insolvent be heard on Tuesday, the 6th day of June next, and that the said insolvent do then attend to be examined before the said Court.

A. T. De, Attorney. (570—2)

In the matter of GOKUL CHUNDER SHAHA, an insolvent.

On Wednesday, the 3rd day of May instant, it was ordered that the matters of the petition of the said insolvent be heard on Tuesday, the 6th day of June next, and that the said insolvent do then attend to be examined before the said Court.

A. C. Ghose, Attorney. (571—2)

In the matter of PROTAP CHUNDER JOHURY, an insolvent.

On Saturday, the 29th day of April last, it was ordered that the matters of the petition of the said insolvent be heard on Tuesday, the 6th day of June next, and that the said insolvent do then attend to be examined before the said Court.

Fox and Mandal, Attorneys. (572—2)

In the matter of WILLIAM STIRLING HALSEY, an insolvent.

On Friday, the 28th day of April last, it was ordered that the matters of the petition of the said insolvent be heard on Tuesday, the 6th day of June next, and that the said insolvent do then attend to be examined before the said Court.

P. N. Sen, Attorney. (573—2)

In the matter of RAMRICK KARWA, *alias* RAMRICK DASS, and JAI NARAIN KARWA, insolvents.

On the 1st day of September last, it was ordered that Tuesday, the 6th day of June next, be appointed for the further hearing of this matter and that unless cause be shewn to the contrary on that day the said insolvents be discharged personally as well as to their after acquired property from all liabilities for debts, claims and demands of and against the said insolvents at the time of the filing of their petition for relief.

Manual and Augurwallah, Attorneys. (574—2)

In the matter of BENARASI DASS, an insolvent.

On Tuesday, the 11th day of April last, it was ordered that Tuesday, the 6th day of June next, be appointed for the further hearing of this matter, and that unless cause be shown to the contrary on that day the said insolvent be discharged personally as well as to his after acquired property from all liabilities for debts, claims and demands of and against the said insolvent at the time of the filing of his petition for relief.

C. G. Lewis, Attorney. (575—2)

In the Court of the District Judge of Saran.

INSOLVENCY CASE No. 1 OF 1905.

RAMZAN MIAN and Alijan Mian, sons of Dahar Mian, deceased, of Bettiah, Christian Toli, tappa Khada, pargana Majhowa, district Champaran, were declared insolvents by this Court on the 27th April 1905. The Nazir of this Court has been appointed receiver of their estate.

E. B. H. PANTON, District Judge

Chapra, the 11th May 1905. (543—1—344)

CALCUTTA POST OFFICE NOTICE.

Mails for—	Date and hour of closing at the General Post Office, Calcutta.		Route by which despatched.
United Kingdom, Aden, Egypt, Europe, America, West Africa *vid* United Kingdom and East Africa *vid* Aden (and also South Africa, if superscribed on the cover *vid* United Kingdom or Aden).	1905. May 25	P.M. At 6-30	Per P. & O. steamer from Bombay.
Parcels and money-orders for the United Kingdom and other Foreign places.	,, 24	Parcels, 5 P.M.; M.-O., 4 P.M.	Ditto ditto.
*Australasian Colonies ..	,, 29	At 7-30	*Vid* Tuticorin and Colombo.*
†Straits Settlements (also China and Japan, if the Steamer's name is superscribed on the cover).	,, 29	,, 8-30	Per steamer *A. Apear.*
Burma	,, 25	,, 7-30	Per B. I. S. N. Co.'s steamer.
Burma, Penang and Singapore.	,, 27	,, 7-30	
Akyab, Kyaukpyu and Sandoway.	,, 26	,, 7-30	
Burma, Tavoy and Mergui ...	,, 29	,, 7-30	*Vid* Rangoon.
Port Blair	,, 27	,, 7-30	

* Although the date entered in column 2 is, as far as can be calculated, the latest safe date of posting for the next Mail steamer, full allowance being made for the steamer being in advance of her published timing, Mails for the places mentioned in column 1 are despatched daily to Tuticorin, so that they may proceed by any steamer from Colombo that has been unusually accelerated or retarded, or by any special opportunity that may be afforded by a steamer not belonging to one of the regular lines.

† Correspondence for China and Japan is despatched daily to Tuticorin, so that it may proceed by the first steamer from Colombo.

1. The letter-box for Inland articles will be cleared for the forenoon Mails at the following hours:—

For Goalundo, Arakan and Chittagong, at 5-45 A.M.

For Midnapore and Orissa districts, at 9 A.M.

For the Eastern districts, as far as Dacca and Mymensingh, at 6-15 A.M.

For Khulna and Jessore districts, at 7 A.M.

For Bombay, Central Provinces and Midnapore *vid* Bengal-Nagpur Railway, at 11-15 A.M., and with a late fee of ½ anna up to 11-40 A.M.

2. The letter-box will be cleared for the evening Mails at the following hours, viz.—

For the East Indian Railway Loop Mail, at 2-30 P.M., and with a late fee of ½ anna up to 2-55 P.M.

For the Northern Bengal, Darjeeling and Assam Mails, at 3-25 P.M., and with a late fee of ½ anna up to 3-50 P.M.

For the Bombay Mail *vid* Jubbulpore, at 6 P.M., and with a late fee of ½ anna up to 6-30 P.M.

For the Punjab Mail, at 7-30 P.M.
For Midnapore, Orissa, Madras Presidency and Ceylon, at 7-30 P.M.
For the Khulna Mail, at 7-30 P.M.
For the Eastern Bengal Mail, Darjeeling, and places on the Darjeeling-Himalayan Railway, at 7-30 P.M.

} and with a late fee of ½ anna up to 8 P.M. and with a late fee of 1 anna up to 8-45 P.M.

3. Late registered letters will be received between the following hours:—

For the Bombay Mail *vid* Jubbulpore, from 5 P.M. to 6-15 P.M.

For the Punjab Mail, from 6 P.M. to 7 P.M.

For the Eastern Bengal Mail, from 6 P.M. to 7 P.M.

For the Khulna Mail, from 6 P.M. to 7 P.M.

For Midnapore, Orissa, Madras Presidency and Ceylon, from 6 P.M. to 7 P.M.

NOTE.—The late fee on each registered letter will be 2 annas, which must be prepaid in stamps on the letter.

4. Articles for Burma and for Port Blair by sea are received without late fee up to 7-30 P.M., and with a late fee of ½ anna up to 8 P.M.

5. On the latest safe day of despatch of Mails for the Australasian Colonies, or any other Foreign Countries, *vid* Madras or Tuticorin, the letter-box for Foreign articles will be cleared for the last time at 7-30 P.M., and late letters and papers fully prepaid will be received up to 8-45 P.M.

6. On the day of despatch of the Mail for Europe (Thursday) the letter-box for Foreign articles will be cleared for the last time for articles, without the late fee, at 6-30 P.M., and late letters and papers fully prepaid will be received up to 6-45 P.M. Late registered articles will be received from 5 to 6 P.M. On the day of despatch of any Foreign Mail by sea, the letter-box will be cleared for the last time, without the late fee, up to 8-30 P.M., and late letters and papers up to 9 P.M. The late fee for Foreign articles is 4 annas, which must be prepaid in stamps affixed to the articles.

CALCUTTA G. P. O., *The 22nd May 1905.* } JOHN OWENS, *Presidency Postmaster.*

Nadia Rivers.

Report showing the least depths of water for the week ending Friday, the 19th May 1905.

Name of River.	Reach of River.	Least depth of water sounding.	Remarks.
		Ft. in.	
Bhagirathi.	Entrance from Ganges	3 9	
	Thence to Geriah	3 0	Mouintola.
	From Geriah to Jangipur ...	3 9	Kanupur.
	,, Jangipur to Berhampore	3 6	Lalbag.
	,, Berhampore to Katwa	1 6	Bhootkhat.
	,, Katwa to Nadia ..	3 3	Goteparah.
Bhairab-Jalangi.	Entrance from Ganges ...	5 0	
	Thence to Akriganj ...	4 6	Khamardiar.
	Akriganj to junction of the Bhairab and Jalangi ...	3 3	Rampur.
	Thence to Patkabari	3 6	Lalnaghar.
	Patkabari to Nadia	3 0	Raghunathpur.
Mathabhanga.	Entrance from Ganges ...	0 3	
	Thence to Dewanganj ...	0 3	Jamalpur.
	From Dewanganj to Shikarpur	0 8	Hakara.
	,, Shikarpur to Boalia ...	1 9	Bharal.
	,, Boalia to Chuadanga ...	1 9	Muhammudpur.
	,, Chuadanga to Kissengani and Hanskhali	5 3	Shialmari.

Gauge Readings.

	Locality.	Date.	Hour.	Height above zero.	Height above mean sea-level.	Remarks.
Ganges ...	Sahibganj	20-5-1905	A.M. 6	Ft. 0'8	Ft. 68'88	Rise.
	Rampur Boalia	20-5-1905	Noon	3	44'70	Do.
	Entrance of Bhagirathi Geriah	21-5-1905	A.M. 7	3	53'15	Do.
	Entrance of Bhairab-Jalangi Akriganj ...	21-5-1905	7	2	40'26	Do.
	Entrance of Mathabhanga ...	...	...	...	...	...
Bhagirathi.	Jangipur ...	21-5-1905	A.M. 8	2	49'50	Rise
	Berhampore ...	22-5-1905	7		38'31	Do.
	Katwa ...	19-5-1905	P.M. 3	5		Fall.
Jalangi ...	Krishnagar ...	19-5-1905	...	1		
	Karupgani ...	20-5-1905	Noon	6		
Mathabhanga.	Hanskhali ...	20-5-1905	P.M. 4	5	16'75	Rise

A. K. BANERJI, Accountant,
for *Exe. Engr., Nadia Rivers Division.*

Berhampore, the 22nd May 1905.

THE INDIAN LAW REPORTS.

Published in FOUR SERIES, viz.:

CALCUTTA, MADRAS, BOMBAY AND ALLAHABAD.

THE Indian Law Reports, published under the authority of the Governor General in Council, are printed in monthly Parts, which are issued, as soon as possible after the first of each month, at Calcutta, Madras, Bombay and Allahabad, respectively.

The Reports comprise four Series—one for the Calcutta High Court, a second for the Madras High Court, a third for the Bombay High Court, and a fourth for the Allahabad High Court.

The cases heard by the Privy Council on appeal from each High Court are reported in the Series for that High Court. Cases heard by the Privy Council on appeal from Provinces in India not subject to any High Court are reported in the Calcutta Series.

The Calcutta Series is distributed by the Bengal Secretariat Book Depôt; and the Madras, Bombay and Allahabad Series are distributed direct from Madras, Bombay and Allahabad, respectively.

Persons desiring to subscribe for or purchase the Reports should apply to—

the Officer in charge, Bengal Secretariat Book Depôt, Calcutta, or

the Superintendent, Government Press, Madras, or

the Superintendent, Government Central Press, Bombay, or

the Curator of Government Books, United Provinces of Agra and Oudh, Allahabad.

PRICES.

THE terms of subscription, and the terms on which current issues and back numbers are sold, are as follows:—

	Without postage.	With Indian postage.	With Foreign postage.
COMPLETE SERIES—	Rs. A. P.	Rs. A. P.	Rs. A. P.
Current issues, per annum	.....	22 8 0	28 0 0
Back numbers, per annum	20 0 0	22 8 0	28 0 0
CALCUTTA SERIES—			
Current issues or back numbers, per annum ..	10 0 0	12 8 0	14 0 0
MADRAS, BOMBAY or ALLAHABAD SERIES—			
Current issues or back numbers, per annum ...	6 0 0	7 0 0	8 0 0
ANY MONTHLY PART—			
Calcutta Series	2 0 0	2 0 0	2 0 0
Madras, Bombay or Allahabad Series	1 0 0	1 0 0	1 0 0

All payments must be made in advance. Remittances to Calcutta should be addressed to the TREASURER, BENGAL SECRETARIAT, *Writers' Buildings, Calcutta.*

PARTS OUT OF STOCK AND DUPLICATE COPIES.

WHEN a requisition is received for any set of the Reports, and any Parts are out of stock, the following deduction from the foregoing rates is made for such Parts:—

	Without postage.	With Indian postage.
CALCUTTA SERIES—	Rs. A. P.	Rs. A. P.
All Parts for one year	7 2 6	8 6 3
Any one Part	0 8 9	0 10 3
MADRAS, BOMBAY or ALLAHABAD SERIES—		
All Parts for one year	4 4 6	4 11 3
Any one Part	0 5 3	0 5 9

If any Part is lost in transit to a subscriber, and the fact is reported to the office of distribution within three months from the date of publication, a duplicate will be supplied at the following rate:—

	Without postage.	With Indian postage.
	Rs. A. P.	Rs. A. P.
CALCUTTA SERIES	0 8 9	0 10 3
MADRAS, BOMBAY or ALLAHABAD SERIES	0 5 3	0 5 9

REPRINTS.

THE Complete Series for the years 1876 to 1881, 1883, 1886, 888, 1890, 1892 to 1896 and 1899 to 1903 has been reprinted, nd may be purchased at the Bengal Secretariat Book Depôt, alcutta, either wholly or in part. All Parts required to complete he stock of the Reports for other years are now being reprinted. Complete Reports from the beginning to date will therefore hortly be available at the Bengal Secretariat Book Depôt.

ADVERTISEMENTS FOR THE CALCUTTA SERIES.

ADVERTISEMENTS of law publications only are received. Rates an be ascertained on application to the Bengal Secretariat Book epôt.

THE BENGAL LAW REPORTS.

SEVERAL volumes of the Bengal Law Reports, from August 868 to December 1875, and Full Bench Rulings, Parts I and II, re available at the Bengal Secretariat Book Depôt, Calcutta, : the following rates:—

	Without postage.	With Indian postage.
	Rs. A. P.	Rs. A. P.
ENGAL LAW REPORTS, for one year ...	20 0 0	22 8 0
ingle copies, each	2 0 0	2 0 0
ULL BENCH RULINGS, Part I and II ...	20 0 0	22 8 0

Pure Sulphate of Quinine and Sulphate of Cinchonidine.

MANUFACTURED AT THE BENGAL GOVERNMENT CINCHONA PLANTATION.

FROM 1st April 1905 the price of these articles will be as follows:—

Quinine.

1 Pound tin,	Rs. 16,	or, post free,	Rs. 16-8.
½ ,,	,, ,,	8 ,,	,, ,,	8-6.
¼ ,,	,, ,,	4 ,,	,, ,,	4-6.

Cinchonidine.

1 Pound tin,	Rs. 12,	or, post free,	Rs. 12-8.
½ ,,	,, ,,	6 ,,	,, ,,	6-6.
¼ ,,	,, ,,	3 ,,	,, ,,	3-6.

Analysis shows these articles to be of the purest manufacture; and they are guaranteed to be free from wilful admixture with the inferior alkaloids. They are for sale only to Government officers, and only for cash, and may be had from the Superintendent, Botanic Garden, Sibpur, near Calcutta. Cinchonidine can also be purchased by dealers at the following rates:—

1 Pound tin,	Rs. 16,	or, post free,	Rs. 16-8.
½ ,,	,, ,,	8 ,,	,, ,,	8-6.
¼ ,,	,, ,,	4 ,,	,, ,,	4-4.

Cinchona Febrifuge.

Cinchona Febrifuge can be purchased by all Government officers and by any one taking *five pounds* and upwards at a time from the Superintendent, Botanic Garden, Calcutta, at the following rates—per four-ounce tin, Re. 1 ans. 14; per eight-ounce tin, Rs. 3 ans. 12; per pound tin, Rs. 7 ans. 8; the general public can be supplied by the Superintendent, Botanic Garden, *for cash only*, at the undernoted rates—per four-ounce tin, Rs. 2 ans. 4; per eight-ounce tin, Rs. 4 ans. 8; per pound tin, Rs. 9. This medicine is also sold by the principal European and Native druggists in Calcutta. Postage, four annas per four-ounce tin; six annas per eight-ounce tin; and eight annas per pound tin, in addition to the foregoing rates.

THE CALCUTTA GAZETTE.

The 1st March 1901.—From this date the subscription to, and postage for, the *Calcutta Gazette* will be at the following rates, payable in advance:—

PER ANNUM.	For Calcutta. Rs. A.	For the Mufassal including postage. Rs. A.
Entire *Gazette*	15 0	20 0
Parts I, Ia and Ib together ...	5 0	7 8
Part II	1 0	2 12
Parts III, IV and IVa together	4 0	6 0
,, V and VI together ..	2 0	3 0
Appendix (Marine Notifications)	1 0	2 12
Supplement	5 0	7 8
PER ISSUE.		
Entire *Gazette*	0 *8	0 10
Supplement	0 4	0 5

N B.—Separate Parts of each issue of the *Gazette*, and occasionally important Rules and Extracts, can be obtained from the Officer in charge, Bengal Secretariat Book Depôt, at the rate of one anna for every sixteen pages or a fraction thereof. Postage according to weight.

RATES FOR ADVERTISEMENTS in the *Calcutta Gazette*:—

Full page, per issue	Rs. 20
Half ,, ,, ,, ...	,, 10

Casual advertisements, 4 annas per line per insertion.

Parts I, II, and III of a Descriptive Catalogue of the Sanskrit Manuscripts in the Library of the Calcutta Sanskrit College, prepared by Pandit Hrishikesa Sastri and Babu Siva Chandra Gui, M.A., B.L., of that College, are offered to the public for sale. The Catalogue is to be completed in 28 parts, the price of each part being 12 annas a copy, exclusive of postage. Copies can be obtained from the Principal of the Sanskrit College, Calcutta.

GOVERNMENT PUBLICATIONS FOR SALE

At the Bengal Secretariat Book Depôt, Writers' Buildings, Calcutta, and by the following Agents :—

AGENTS IN INDIA.

Messrs. Thacker, Spink & Co., Calcutta and Simla.
Messrs. Newman & Co., Calcutta.
Messrs Higginbotham & Co., Madras.
Messrs. Thacker & Co., Ld., Bombay.
Messrs. A. J. Combridge & Co., Bombay.
The Superintendent, American Baptist Mission Press, Rangoon.
Mrs. Radhabai Atmaram Sagoon, Bombay.
Messrs. R. Cambray & Co., Calcutta.
Rai Sahib M. Gulab Singh & Sons, Proprietors of the Mufid-i-am Press, Lahore, Punjab.
Messrs. S. K. Lahiri & Co., Printers and Booksellers, College Street, Calcutta.
Messrs. V. Kalyanarama Iver & Co., Booksellers, &c., Madras.
Messrs. D. B. Taraporevala, Sons & Co., Booksellers, Bombay.
Messrs. G. A. Natesan & Co., Madras.
Mr. N. B. Mathur, Superintendent, Nazair Kanum Hind Press, Allahabad.
The Calcutta School Book Society.

AGENTS IN ENGLAND.

Mr. E. A. Arnold, 41 and 43 Maddox Street, Bond Street, London, W.
Messrs. Constable & Co., 16 James Street, Hay Market, London, W.
Messrs. Kegan Paul, Trench, Trübner & Co., Charing Cross Road, London.
Mr. B. Alfred Quaritch, 15 Piccadilly, London.
Messrs. P. S. King & Son, 2 & 4 Great Smith Street, Westminster, London.
Messrs. H. S. King & Co., 65 Cornhill, London.
Mr. B. H. Blackwell, 50-51, Broad Street, Oxford.
Messrs. Deighton Bell & Co., Cambridge.

AGENTS ON THE CONTINENT.

Messrs. R. Friedländer & Sohn, Berlin, N. W. Carlstrasse, 11.
Mr. Otto Harrassowitz, Leipzig.
Mr. Karl Hiersemann, Leipzig.
Mr. Ernest Leroux, 28 Rue Bonaparte, Paris.
Mr. Martinus Nijhoff, The Hague.

NOTICE.—Books required for private use can be purchased. Applications should be accompanied by remittance in each case.

All remittances on account of subscriptions to, or prices of, Gazettes, Indian Law Reports or other Government publications available for sale at the Bengal Secretariat Book Depôt, or for cost of advertisements published in the Gazettes should, in future, be made payable to the "Treasurer, Bengal Secretariat, Calcutta." Advices of such remittances, if separately sent, should be addressed to the "Accountant, Bengal Secretariat." All advertisements intended for publication in the *Calcutta* or *Bengali Gazette* should be sent direct to the Superintendent, Government Printing, Bengal.

Books required for the Public Service should be obtained through the Heads of Departments.

☞ *The amounts within parentheses are for packing and postage.*

NEW PUBLICATIONS ISSUED DURING THE CURRENT QUARTER.

APPOINTMENT DEPARTMENT.

Quarterly Civil List for Bengal, corrected up to 1st April 1905. Rs. 3. (4a.)

GENERAL DEPARTMENT.

Kurukh Folk-lore in the original collected and transliterated by Revd. Ferd Hahn. F'cap. 4to. cloth. Rs. 2. (3a.)

LEGISLATIVE DEPARTMENT.

The Sunderbans Act (Ben. Act I of 1905) in English, Bengali or Hindi. 6p. (1a.)
The Bengal Repealing Act (Ben. Act II of 1905) in English Bengali or Hindi. 6p. (1a.)
The Indian Paper Currency Act (Act III of 1905) in Bengali. As. 2. (1a.)
Ditto ditto in Hindi. As. 2-6. (1a.)
The Indian Railway Boards Act (Act IV of 1905) in Bengali or Hindi. 6p. (1a.)

PUBLIC WORKS DEPARTMENT.

Classified List and Distribution Return of the Bengal Public Works Department, Establishment, corrected up to 31st March 1905. As. 4. (2a.)

REVENUE DEPARTMENT.

A Monograph on Gold and Silver Work in the Bengal Presidency. By D. N. Mookherjee, Assistant Director, Land Records and Agriculture. F'cap. Paper cover. Re. 1-8. (2a.)
Annual Report on the Survey Operations in Bengal during the year 1903-04. F'cap. Paper cover. Re. 1 (2a.).
Annual Progress Report on Forest Administration in the Lower Provinces of Bengal for the year 1903-04. F'cap. Paper cover. Re. 1-4 (2a.).
Annual Report of the Director of the Department of Land Records and Agriculture, Bengal, on Settlements and Land Records for the year ending 30th September 1904. F'cap. Paper cover. As. 8 (2a.).
An account of the Research work in Indigo carried out at Dalsing Sarai Research Station (under subsidy of the Government of Bengal) from 1903 to March 1904. by W. Popplewell Bloxam and H. M. Leake. F'cap., board. Paper cover. Re. 1 (4a.).
Report on an inquiry into the state of the Tasar Silk Industry in Bengal and the Central Provinces of India. By N. G. Mukerjee. F'cap. Paper cover. Re. 1. (2a.)

NEW PUBLICATIONS ISSUED BETWEEN 1ST OCTOBER 1904 AND THE 31ST MARCH 1905.

APPOINTMENT DEPARTMENT.

Quarterly Civil List of Bengal, corrected up to 1st January 1905. Rs. 3. (4s.)

FINANCIAL DEPARTMENT.

Report on the Road and Public Works Cess Operations of the Lower Provinces for the official year 1903-04. F'cap. Paper cover. Rs. 2. (2s.)

Report on the Administration of the Excise Department in the Lower Provinces of Bengal for the year 1903-04. F'cap. Paper cover. Rs. 2. (2s.)

GENERAL DEPARTMENT.

Report on Inland Emigration during the year ending 30th June 1904. F'cap. Paper cover. As. 8. (1s.)

General Report on Public Instruction in Bengal for 1903-04. F'cap. Paper. Re. 1-5-3. (2s.)

List of Officers in the Subordinate Educational Service, Bengal, corrected up to 1st January 1905. As. 8. (1s.)

Bengal Administration Report, 1903-04. F'cap. Cloth. Rs. 3. (6s.)

JUDICIAL DEPARTMENT.

Annual Report on the Police Administration of the Town of Calcutta and its suburbs for the year 1903. F'cap. Paper cover. Re. 1. (2s.)

LEGISLATIVE DEPARTMENT.

The Chota Nagpur Landlord and Tenant Procedure Act (Bengal Act I of 1879, modified) with notes by H. W. C. Carnduff. Re. 1-8. (2s.)

Indian Emigration Act (Amendment) (Act XII of 1904) in Bengali, Hindi or Uriya. 6p. (1s.)

The Indian Stamp Act (Act XV of 1904), in Bengali, Hindi or Uriya. 1s. (1s.)

The Local Authorities Loans Act (Act I of 1905) in Bengali or Hindi. 6p. (1s.)

The Indian Universities Validation Act (Act II of 1905) in Bengali or Hindi. 6p. (1s.)

The Stage Carriages Act (Act XVI of 1861), as modified up to 1st February 1898, in Hindi. As 3. (1s.)

The Indian Evidence Act (Act I of 1872) as modified up to 1st November 1902, in Hindi. As. 14 (1s.)

The Indian Explosives Act (Act IV of 1884) as modified up to 1st December 1884, in Hindi. As. 2. (1s.)

The Bengal Tenancy Act (Act VIII of 1885) as modified up to 1st December 1903, in Uriya. Re. 1. (2s.)

The Indian Railway Act (Act IX of 1890) as modified up to 1st May 1896 and corrected up to the 1st December 1903, in Hindi. As. 13. (1s.)

MUNICIPAL DEPARTMENT.

List of qualified Medical Practitioners in Bengal, 1904. Royal 8vo. Boards. Paper cover. Re. 1. (2s.)

Resolution reviewing the working of Municipalities in Bengal during the year 1903-04. F'cap. Paper cover. Re. 1. (2s.)

Resolution reviewing the Reports on the working of District Boards in Bengal during the year 1903-04. F'cap. Paper cover. Re. 1. (1s.)

PUBLIC WORKS DEPARTMENT.

Conditions under which Electric Meters and other instruments will be accepted for testing in the Government Electrical Laboratory, Calcutta, and Table of Fees. F'cap. Paper cover. 1s. (1s.)

Revenue Report of the Government of Bengal, Public Works Department, Irrigation Branch, for the year 1903-04. F'cap. Boards. Paper cover. Rs. 2. (3s.)

Classified List and Distribution Return of Establishment of the Public Works Department, Bengal, corrected up to 31st December 1904. Re. 1. (2s.)

Resolution on the Embankment and Drainage Reports of the Government of Bengal, Irrigation Department, for the year 1903-04. F'cap. Boards. Paper cover. Re. 1. (2s.)

REVENUE DEPARTMENT.

Annual Report on the Survey Operations in Bengal during 1903-04 (from October 1903 to September 1904). F'cap. Paper cover. Re. 1. (2s.)

Final Report on the Survey and Settlement Operations in the Saran District, 1893 to 1901, by J. H. Kerr, Esq., Settlement Officer, North Bihar. F'cap. Boards, paper cover. Rs. 4-8. (6s.)

Final Report on the Survey and Settlement Operations in the Darbhanga District, 1896 to 1903, by J. H. Kerr, Esq. F'cap. Boards, paper cover. Re. 0. (5s.)

Abstract of the Indian Factories Act, 1881, in sheet form, for hanging up in Factories. In English and Hindi and Urdu. As. 4. (1s.) unmounted. Re. 1-4 mounted.

Agricultural Statistics of the Lower Provinces of Bengal for 1903-04. F'cap. Paper cover. As. 8. (1s.)

Report on Wards and attached Estates in the Lower Provinces for the year 1903-04. F'cap. Paper cover. Re. 1-8. (2s.)

Report on Land Revenue Administration of the Lower Provinces for the year 1903-04. F'cap. Boards. Paper cover. Re. 3. (2s.)

STATISTICAL DEPARTMENT.

The Trade between Bengal with Nepal, Thibet, Sikkim and Bhutan for the year ending March 1904. F'cap. Paper cover. Re. 1-2. (2s.)

Report on Coasting Trade carried by Rail and River in Bengal in the official year 1903-04. F'cap. Board. Paper cover. Re. 4. (5s.)

OLDER PUBLICATIONS.

A General Catalogue of all Government Publications (corrected up to 30th June 1904) may be obtained *gratis* on application to the Officer in charge, Bengal Secretariat Book Depôt.

Publications for sale at the office of the Chief Inspector of Explosives with the Government of India.

Rules for the manufacture, possession and sale of explosives issued by each of the Local Governments and Administrations. Price 12a.

Rules for the transport and importation of explosives issued by the Government of India. Price 12a.

Rules for the transport and importation of explosives at the Port of Calcutta. Price 4a.

Publications for sale at the Custom House, Calcutta.

Review of the Maritime Trade of Bengal and its Chief Port (Calcutta) for the year 1903-04. Price Re. 1.

Annual Statement of the Sea-borne Trade and Navigation of Bengal, Foreign and Coasting combined in one volume, for the year 1903-04. Price Rs. 6.
Previous years' volumes can be obtained at the same price.

GOVERNMENT PUBLICATIONS FOR SALE

BY THE SUPERINTENDENT OF GOVERNMENT PRINTING, INDIA, 8 HASTINGS STREET, CALCUTTA.

A General Catalogue of all Government Publications may be obtained gratis from the Government Central Press, Calcutta.

All books published by the Superintendent of Government Printing, India, can be purchased, either directly or through the following or any other booksellers:—

AGENTS IN EUROPE.

Mr. E. Arnold, 41 and 43 Maddox Street, Bond Street, W. London.

Messrs. Constable & Co., 16 James Street, Haymarket, W., London.

Messrs. Kegan Paul, Trench, Trubner & Co., Charing Cross Road, London.

Mr. Bernard Quaritch, 15 Piccadilly, London.

Messrs. P. S. King and Son, 2 & 4 Great Smith Street, Westminster.

Messrs. H. S. King & Co., 65 Cornhill, and 9 Pall Mall, London.

Messrs. Grindlay & Co., 54 Parliament Street, London, S. W., Agents for the sale of the Army List.

Mr. Otto Harrassowitz } Leipzig.
Mr. Karl Hiersemann }

Messrs. R. Friedlander & Sohn, Berlin, W. N. Carlstrasse, 11.

Mr. Ernest Leroux, 28 Rue Bonaparte, Paris.

Mr. Martinus Nijhoff, Hague, Holland.

Mr. B. H. Blackwell, 50 & 51 Broad Street, Oxford.

Messrs. Deighton Bell & Co., Cambridge.

AGENTS IN INDIA.

Messrs. Thacker, Spink & Co., Calcutta and Simla.

Messrs. Newman & Co., Calcutta.

Messrs. R. Cambray & Co., Calcutta.

Messrs. S. K. Lahiri & Co., Calcutta.

Eveyln, Hubert, & Co.,* 149, Dhurmotollah Street, Calcutta.

Messrs. Higginbotham & Co., Madras.

Messrs. V. Kalyanarama Iyer & Co., Madras.

Messrs. G. A. Natesan & Co., Madras.

Messrs. Thacker & Co., Ld., Bombay.

Messrs. A. J. Combridge & Co., Bombay.

Messrs. D. B. Taraporevala, Sons & Co., Bombay.

Mrs. Radhabai Atmaram Sagoon, Bombay.

Superintendent, American Baptist Mission Press, Rangoon.

Rai Sahib M. Gulab Singh & Sons, Mufid-i-Am Press, Lahore.

Mr. N. B. Mathur, Superintendent, Nazair Kanun Hind Press, Allahabad.

Manager, Educational Book Depôts, Nagpur and Jubbulpore.*

Manager of the Imperial Book Depot, 63 Chandny Chauk Street, Delhi.*

Manager, "East Coast News," Vizagapatam.*

Manager, "The Agra Medical Hall and Co-operative Association, Limited" (Successors to A. John & Co., Agra).*

Mr. T. K. Seetharama Aiyar, Kumbakonam.*

Lala Debi Prasad, Vakil and Manager of Law Press, Cawnpore.*

Superintendent, Basel Mission Book and Tract Depository, Mangalore.*

Messrs. P. Varadachary & Co., Madras.*

Mr. Sunder Pandurang, Bombay.*

The Mercantile Mission Branch, Calicut.*

H. Dowman, Esq. (late Extra Assistant Superintendent, Survey of India), Allahabad.*

H. Liddell, Esq., Printers, etc., 7, South Road, Allahabad.*

* Agents for sale of the Legislative Department publications.

NOTICE.—Books and Acts required for private use only can be purchased. Applications should be accompanied by a remittance, unless it is wished that the books should be sent by value-payable post, in which case, besides the ordinary postage, an additional charge is made for registration and commission.

Books and Acts required for the public service should be obtained through Local Governments to whom the applicant is subordinate.

Application for Government publications which are no longer in print should be made to the Agents of the particular Government under whose orders they were originally issued.

(The amounts within parentheses are for packing and postage.)

List of New Books published during the Current Quarter

LEGISLATIVE DEPARTMENT.

The Bengal Code, Vol. II, 3rd Edition, 1905. (Now ready). Cloth. Super-Royal 8vo. Rs. 6 or 9s. (10a.)

The Ajmere Code, 3rd Edition, 1905. Cloth. Super-Royal 8vo. Rs. 2-8 or 3s. 9d. (7a.)

Act XIII of 1885, The Indian Telegraph Act, 1885, as modified up to 1st March 1905. 5a. (1a·)

Act III of 1900, The Prisoners Act, as modified up to 1st March 1905. 6a. 6p. (1a.)

HOME DEPARTMENT.

Scientific Memoirs by Officers of the Medical and Sanitary Departments of the Government of India—Oriental or Delhi Sore by Captain S. P. James, M.B., I.M.S., New series, No. 13. Super-Royal 4to. Limp cover. 10a. or 1s. (3a.)

Scientific Memoirs by Officers of the Medical and Sanitary Department of the Government of India—On a parasite found in the White Corpuscles of the blood of dogs by Captain S. P. James, M.B., I.M.S. New series No. 14. Super-Royal 4to. Limp cover. 10a. or 1s. (3a.)

Imperial Library List of Additions, Third Series, with subject index, March 1905. No. 7. Super-Royal 4to. Paper cover. 8a. or 9d. (2a.)

The Private Diary of Ananda Ranga Pillai, Vol. I, 1736 to 1746—Dubash to Joseph Francois Dupleix, Knight of the Order of St. Michael, and Governor of Pondichery.—A record of Matters, Political, Historical, Social, and Personal, from 1736 to 1761. Translated from the Tamil by the order of the Government of Madras and Edited by Sir J. Frederick Price, K.C.S.I., late of the I.C.S., assisted by R. Rangachari, B.A. Rs. 3 or 4s 6d. (7a.)

Quarterly List of Officers in the Department of the Government of India, April to June 1905. Foolscap, paper cover. 4a. or 5d. (1a.)

Annual Report of the National Association for Supplying Female Medical Aid to the Women of India for the year 1904. (20th issue.) Royal 8vo. Limp cover. Re. 1 or 1s. 4d. (4a.)
Fauna of British India, Butterflies. Vol. I, by Colonel C. T. Bingham. Royal 8vo. cloth. Rs. 15 or 22s. 6d. (7a.)

REVENUE AND AGRICULTURE DEPARTMENT.

Progress Report of Forest Administrations in the Andamans for 1903-04. Foolscap. Paper cover. 8a. or 9d. (2a.)

FOREIGN DEPARTMENT.

Report on the Political Administration of the territories within the Central India Agency for 1903-04. (Selection No. CCCCXVI.) Foolscap, board. Re. 1 or 1s. 6d. (2a.)
Report on the working of the Thagi and Dakaiti Department for 1903. (Selection No. CCICCI.) Foolscap, paper cover. 9a. or 11d. (1a.)
Administration Report on the Persian Gulf Political Residency and Maskat Political Agency for 1903-04. (Selection No. CCCCXI.) Foolscap, board. Re 1 or 1s. 6d. (2a.)
Administration Report of the Baluchistan Agency for 1903-04. (Selection No. CCCCXVII. Foolscap. Board. Re. 1-12 or 2s. 8d. (3a.)

FINANCE DEPARTMENT.

Financial Statement for 1904-05 and 1905-06. Foolscap, board. Re. 1-8 or 2s. 3d. (6a.)

COMPTROLLER-GENERAL.

Appropriation Report on the Accounts of the Government of India for 1903-04 by A. F. Cox, Esq. Foolscap. Board. 8a. or 9d. (6a.)

STATISTICAL DEPARTMENT.

Sea-Borne Trade and Navigation Accounts of British India for the month of February 1905. No. 11 of 1904-05. Royal 8vo. Stitched. 8a. or 9d. (2a.)
Accounts of the External Land Trade of British India for the month of December 1904, No. 9 of 1904-05. Royal 8vo., stitched. 8a. or 9d. (2a.)
Statistics of cotton spinning and weaving in the Indian Mills in January 1905 and in the ten months, April 1904 to January 1905, compared with the corresponding period of 1902-03 and 1903-04. Royal 8vo., stitched. 2a. or 2d (1a.)
Statistics of Cotton Spinning and Weaving in the Indian Mills in February 1905 and in the 11 months, April 1904 to February 1905, compared with the corresponding period of 1902-03 and 1903-04. Royal 8vo. Stitched. 2a. or 2d. (1a.)
Accounts relating to the Trade carried by rail and river in India in the quarter and in six months ending September 1904, compared with the corresponding periods of the years 1902 and 1903. No. 2 of 1904-05. Foolscap, paper cover. 8a. or 9d. (3a.)
Sea-Borne Trade and Navigation Accounts of British India for the month of March 1905. No. 12. Royal 8vo. Stitched. 8a. or 9d. (2a.)
Accounts relating to the Sea-borne Trade and Navigation of British India for the calendar year 1904, compared with the years 1902 and 1903. 8a. or 9d. (1a.)

MILITARY DEPARTMENT.

The Quarterly Indian Army List for April 1905, New series, No. 4. Royal 8vo., paper cover Re. 3 or 4s. 6d. (8a.)

RAILWAY BOARD.

Report (dated 30th December 1903) on the Organisation and Working of Railways in America by Neville Priestley, Esq. Foolscap. Paper cover. Re. 3 or 4s. 6d. (3a.)

List of Books published from October 1904 to March 1905.

LEGISLATIVE DEPARTMENT.

The Indian Registration Act, 1877 (III of 1877), as modified up to 1st April, 1900, with footnotes brought down to 1st November, 1902. 11a. (2a.)
The Indian Emigration Act, 1883 (XXI of 1883), as modified up to 1st December, 1902. 11a.
Act XXX of 1852. An Act for the Naturalization of Aliens, as modified up to 1st December, 1902. 2a. (1a.)
Act V of 1861. The Police Act, 1861. As modified up to 7th March, 1908. 7a. 6p. (1a.)
Act X of 1873. The Indian Oaths Act. As modified up to 1st February, 1903. 3a. 9p. (1a.)
Act XIX of 1883. The Land Improvement Loans Act, 1883. As modified up to 1st February, 1903. 2a. 6p. (1a.)
Act XII of 1884. The Agriculturists' Loans Act, 1884. As modified up to the 15th December, 1896, and with footnotes brought down to the 1st February, 1903. 2a. (1a.)
Act IX of 1890. The Indian Railways Act, 1890. As modified up to 1st May, 1896, with footnotes brought down to 1st January, 1903. 15a. (3a.)
Act XXXIV of 1850. The State Prisoners Act, 1850. As modified up to 30th April, 1903. 2a. 6p. (1a.)
Act XXXIV of 1858. The Lunacy (Supreme Courts) Act, 1858. As modified up to 30th April, 1903. 4a. 3p. (1a.)
Act XXXV of 1858. The Lunacy (District Courts) Act, 1858. As modified up to 30th April, 1903 2a. 3p. (1a.)
Act V of 1873. The Government Savings Banks Act, 1873. As modified up to 1st April, 1903. 3a. 6p. (1a.)
Act II of 1886. The Indian Income Tax Act 1886. As modified up to 1st April, 1903. 3a. (1a. 6p.)
Act I of 1878. The Opium Act, 1878. As modified up to 1st December, 1896, with footnotes brought down to 1st March, 1903. 5a. 6p. (1a.)
Act III of 1865. The Carriers Act, 1865. As modified up to 31st May, 1903. 3a. (1a.)
Act IX of 1897. Amending the law relating to Government and other Provident Funds. As modified up to 1st May, 1896, with footnotes brought down to 1st January, 1903. 1a. 6p. (1a.)
Act No. XII of 1855 (Legal Representatives' Suits), as modified up to 1st November, 1904. 1a 6p. (1a.)
Act No. IX. of 1860 [Employers and Workmen (Disputes)], as modified up to 1st December, 1904. 1a. 6p. (1a.)
Act No XXI of 1860 (Societies Registration), as modified up to 1st December, 1904. 2a. 9p. (1a.)
The Punjab Laws Act, 1872 (IV of 1872), as modified up to 1st November, 1904. 7a. 1a. (1a.)
The Indian Christian Marriage Act, 1872 (XV of 1872), as modified up to 1st December, 1904. 10a. (1a.)
Act No. X of 1891 (Indian Penal Code Amendment), as modified up to 1st December 1904 1a. (1a.)
The Indian Petroleum Act, 1899 (VIII of 1899), as modified up to the 1st December 1904. 7a. (1a.)
The Indian Extradition Act, 1903 (XV of 1903), as modified up to 1st December, 1904. 5a. 6p. (1a.)

Act V of 1869. The Indian Articles of War, as modified up to 1st December 1904. Royal 8vo. Stitched. Re. 1 2*a*. (3*a*.)

Act XV of 1881. The Indian Factories Act, 1881, as modified up to the 1st December 1904. Royal 8vo. Stitched. 5*a*. 6*p*. (1*a*. 6*p*.)

Act V of 1883. The Indian Merchant Shipping Act, 1883, as modified up to the 1st December, 1904. Royal 8vo. Stitched. 6*a*. (1*a*.)

The Central Provinces Code, 3rd Edition, 1905. Cloth, Super-Royal 8vo. Re. 4 or 6*s*. (6*a*.)

The Bengal Code, Volume I, 3rd Edition, 1905 (Now ready). Cloth. Super-Royal. Price all 5 Volumes Rs. 30 or 45*s*. Vol. I. Rs. 6 or 9*s*. (8*a*.)

The Public Gambling Act, 1867 (III of 1867), as modified up to the 1st January, 1905. As. 4 or 5*d*. (1*a*.)

The Indian Contract Act, 1872 (Act IX of 1872), as modified up to the 30th June, 1901. Royal 8vo. Stitched. Re. 1-4*a*. (2*a*.)

HOME DEPARTMENT.

Scientific Memoirs by Officers of the Medical and Sanitary Departments of the Government of India. On a parasite found in persons suffering from enlargement of the spleen in India, by Lieut. S. R. Christophers, M.B., I.M.S., New series, No. 11. Super-Royal 4to. Limp cover. Rs. 2 or 3*s*. (3*a*.)

Report on the Administration of Criminal Justice in Lower Provinces of Bengal during the year 1903. Foolscap. Paper cover Re. 1. or 1*s*. 6*d*. (2*a*.)

Imperial Library List of Additions, September to December 1904, Nos. 1—6. Foolscap. Paper cover. As. 8 or 9*d*. (2*a*.) each.

Report on the Administration of Civil Justice in the Lower Provinces of Bengal during the year 1903. Foolscap. Paper cover. Re. 1 or 1*s*. 6*d*. (3*a*.)

Scientific Memoirs by Officers of the Medical and Sanitary Departments of the Government of India on the Morphology, Teratology and Declinism of the Flowers of Cannabis By Major D. Prain, M.B., I.M.S. New series. No. 12. Super-Royal 4to. Limp cover. 14*a*. 1*s*. 4*d*. (3*a*.)

Quarterly List of Officers in the Departments of the Government of India, October to December 1904, January to March 1905. Foolscap, Paper cover As. 4 or 5*d*. (1*a*.)

Annual Report of the Sanitary Commissioner with the Government of India, 1903, with Appendices and Returns of sickness and Mortality among European Troops, Native Troops and Prisoners in India for the year. Foolscap. Board. Rs. 3 or 4*s*. 6*d*. (8*a*.)

Report of the Indian Police Commission, 1902-03. Foolscap. Board. With appendices Re. 1-8*a*. (7*a*.); without appendices, Re. 1 (6*a*.)

DEPARTMENT OF REVENUE AND AGRICULTURE.

Report of the Chief Inspector of Mines in India for the year ending 31st December 1903. Foolscap. Board. As. 12 or 1*s*. 2*d*. (2*a*.)

Review of Forest Administration in British India for the year 1902-03. Foolscap. Paper cover. Re. 1-11 or 2*s*. 6*d*. (3*a*.)

Annual Administration Report of the Civil Veterinary Department in India for the official year 1903-04. Foolscap. Paper cover. 12*a*. or 1*s*. (2*a*.)

Records of the Botanical Survey of India, Vol. IV, No. 1 (An Epitome of the British Indian Species of impatients by Sir J. D. Hooker, G.C.S.I., C.B., F.R.S. Part I. Royal 8vo. Paper cover. 3*a* or 4*d*. (1*a*.)

Records of the Botanical Survey of India, Vol III, No. 2. The vegetation of the districts of Hughli, Howrah and the 24-Parganas, by D. Prain, Esq. Re. 1-12. or 2*s*. 8*d*. (3*a*.)

Rules framed under section 20 of the Indian Mines Act, 1901 (VIII of 1901) prescribing the Compulsory submission of Annual returns of output and labour of Indian Mines. Foolscap. 0-0-6. (1*a*.)

Rules for the Lease or Sale of Waste Lands in India. 1904 edition. Foolscap. Board. Rs. 4 or 6*s*. (8*a*.)

Archæological Survey of India. Annual Report, 1902-03. Super-Royal. Cloth. Rs. 20 or £1 10*s*. (Re. 1 2*a*.)

Annual Report of the Board of Scientific Advice for India for the year 1903-04. Foolscap. Paper cover. 6*a*. or 7*d*. (2*a*.)

List of Officers in the Department of Revenue and Agriculture, Government of India, and the Departments subordinate to it, corrected to 1st January 1905. As. 8 or 8*d*. (2*a*.)

FOREIGN DEPARTMENT.

Report on the Political Administration of the Territories within the Central India Agency for 1902-03. Foolscap Board. Re. 1 or 1*s* 6*d*. (3*a*.)

Report on the Administration of the Civil and Military Station of Bangalore for the year 1902-03. 8*a*. or 9*d*. (2*a*.)

Report on the Administration of Berar for the year 1902-03. Foolscap. Board. Rs. 2 or 3*s*. (2*a*.)

Report on the Administration of the Civil and Military Station of Bangalore for the year 1903-04. Foolscap Limp cover. 8*a*. or 9*d*. (2*a*.)

FINANCE DEPARTMENT.

Report on the Administration of the Mint at Bombay and Calcutta for the year 1903-04. Foolscap. Paper cover. Re. 1 or 1*s*. 6*d* (2*a*.)

Statistics Compiled from the Finance and Revenue Accounts of the Government of India. Receipts and Disbursemets of Home and Indian Accounts from 1st April 1895 to 31st March 1903. Foolscap. Board, Rs. 2 or 3*s*. (9*a*.)

List of Officers in the Finance and Commerce Department, corrected to 1st October, December 1904, January and February 1905. Royal 8vo. Paper cover. 4*a*. or 5*d*. (1*a*.)

COMPTROLLER-GENERAL.

Finance and Revenue Accounts of the Government of India for the year 1903-04. Foolscap. Board. Rs. 2. or 3*s*. (8*a*.)

STATISTICAL DEPARTMENT.

Statistics of Cotton Spinning and Weaving in the Indian Mills in June 1904 and in the three months, April to June 1904, compared with the corresponding period of 1902 and 1903. No. 5 of 1904-05. Royal 8vo. Stitched. 2*a*. or 2*d*. (1*a*.) each.

Trade and Navigation Accounts of British India for the months of August, September and October 1904. Nos. 5, 6 and 7 of 1904-05. Royal 8vo. Stitched. 3*a*. or 9*d*. (2*a*.) each.

Accounts of the External Land Trade of British India for the months of June July and August 1904. Nos. 3, 4 and 5 of 1904-05. Royal 8vo. Stitched. 3*a*. or 9*d*. (2*a*.) each.

Statistics of Cotton Spinning and Weaving in the Indian Mills in July, August, September, October, November, December 1904. Royal 8vo. Stitched. 2*a*. or 2*d*. (1*a*.) each.

Judicial and Administrative Statistics of British India for 1902-03 and preceding years. 8th issue. Foolscap. Board. Rs. 2 or 3*s*. (10*a*.)

Accounts of the French Possessions in India in the year ending 31st March 1904 and the four preceding years. Foolscap. Paper cover. 2*a*. or 2*d*. (1*a*.)

Accounts of the Trade of Aden in the year ending 31st March 1904 and the four preceding years. Foolscap. Paper cover. 10*a*. (1*a*.)

Area and yield of certain principal crops in India. Sixth issue. Foolscap. Paper cover. 5*a*. or 6*d*. (2*a*.)

Sea-Borne Trade and Navigation Accounts of British India for the months of November, December 1904, January 1905. Nos. 8, 9 and 10 of 1904-05. Royal 8vo. Stitched. 3*a*. or 9*d*. (2*a*.)

Accounts of the External Land Trade of British India for the month of September, October 1904. Nos. 6, 7 and 8 of 1904-05. Royal 8vo, Stitched. 3*a*. or 9*d*. (2*a*.)

Agricultural Statistics of India for the years 1898-99 to 1902-03 in two Volumes. Foolscap. Board. Both Volumes. Rs. 3-8*a.* or 5*s.* 8*d.* (12*a.*)

Accounts relating to the trade carried by Rail and River in India in the quarter ending June 1904, compared with the corresponding period of the years 1902 and 1903. No. 1 of 1904-05. Foolscap. Paper cover. 8*a.* or 9*d.* (3*a.*)

Financial and Commercial Statistics of British India, II issue, 1904. Super-Royal, Paper cover. Rs. 4 or 6*s.* (12*a.*)

Tariff Shcedules, 1905. Royal 8vo. Stitched. 6*a.* or 7*d.* (1*s.*)

Annual Statement of the Coasting Trade and Navigation of British India in the year ending 31st March 1904. Super-Royal. Board. Rs. 2 or 3*s.* (7*a.*)

ACCOUNTANT-GENERAL.

History of Services of Gazetted and other Officers serving under the Government of Bengal, corrected to 1st July 1904. In two parts. Royal 8vo. Board. Rs. 5 or 7*s.* 6*d.* (12*a.*)

MILITARY DEPARTMENT.

Return of Wreck and Casualties in Indian Waters, 1902-03. Foolscap. Board. Re. 1 or 1*s.* 6*d.* (3*a.*)

Class Hand Books for the Indian Army—Mappillas or Moplahs, by Major P. Holland Pryor. Royal 8vo. Board. Re. 1-4 or 1*s.* 11*d.* (5*a.*)

Hand Book for the Indian Army—Jats, Gujars, and Ahirs, by Major A. H. Bingley. Royal 8vo. Board. Re. 1 or 1*s.* 6*d.* (5*a.*)

Classified List and Distribution Return of the Establishment of the Military Works Services corrected up to 31st December 1904. Royal 8vo. Paper cover. 4*a.* or 5*d.* (1*a.*)

RAILWAY BOARD.

Administration Report of the Telegraph Department for 1903-04. Foolscap. Paper cover. 8*a.* or 6*d.* (2*a.*)

Public Works Department Classified List of the Subordinate Establishment, corrected to 30th June 1904. Royal 8vo. Paper cover. 4*a.* or 5*d.* (1*a.*)

Public Works Department Classified List and Distribution of Establishment corrected up to 31st December 1904. Super-Royal 8vo. Paper cover. Re. 2 or 3*s.* (4*a.*)

Selections from the Records of the Government of India in the Pubilc Works Department, No. CCXXXVIII.—Relative Merits of Broad and Metre Gauge Lines of Railway. Foolscap. Board. 4*a.* or 5*d.* (1*s.* 6*p.*)

Classified List of the Subordinate Establishment corrected up to 31st December 1904. Royal 8vo. Paper. 4*a.* or 5*d.* (1*a.*)

List of new books for sale at Thomason College, Roorkee which were not advertised before.

Roorkee Treatise on "Railways," 4th Edition, revised by F. Wolly Dod, M.C.E. Price, Rs. 3 per copy.

Roorkee Treatise on "Irrigation Work." By Lieutenant-Colonel J. Clibborn, I.S.C., B.A., L.C.E., C.I.E. Price, Rs. 9 per copy.

Roorkee Treatise on "Sanitary Engineering." Compiled by Lieutenant-Colonel J. Clibborn, I.S.C., B.A., L.C.E., C.I.E. Price, Rs. 4-8 per copy.

Roorkee Manual of "Applied Mechanics," Volume II. The stability of structures mostly by graphic methods, by Lieutenant-Colonel J. H. C. Harrison, R.E. Price, Rs. 8-2 per copy.

Roorkee Manual of Hydraulics. Price per copy, Re. 1-4. (No. XIX, Elementary Treatise.) By E. F. Tipple, Esq., B.A.

Designs for Wooden Bridges, together with rules for calculating the area of waterway, etc., and Plates. By late Rai Bahadur Kunhya Lal. Price per set, Rs. 4-2

Pamphlet on Examination for Acid Radicals: Tables giving Analysis of Acids. Price per copy, 8*a.*

Pamphlet on Examination for Acid Bases: Tables giving Analysis of Metallic Bases. Price, 8*a.* per copy.

List of New Books available for sale in the College Book Depôt.

Roorkee Treatise on Civil Engineering, Section XIII. Drawing for Engineer students, Part I. By Major E. H. deV. Atkinson, R.E., Principal, Thomason College, Roorkee. Price per copy Rs. 3-2, including packing, postage, etc.

Hand-Book of the Thomason Engineering College, Roorkee. Illustrated. Price Rs. 6-12 per copy, including packing, postage, etc.

A list of new books and periodicals for sale at the Library of the Asiatic Society of Bengal, 57 Park Street, Calcutta.

SOCIETY'S PUBLICATIONS.

Proceedings Nos. 9 and 10, at 8*a.*

BIBLIOTHECA INDICA.

Chaturvarga Chintamani. Vol. IV, Fasc. 3, at 6*a.*

Catasahasrika Prajnaparamita. Vol. II, Fasc. 9, at 6*a.*

Mahabhasyapradipoddyota. Vol. III, Fasc. 1, at 6*a.*

Suddhi Kaumudi. Fasc. 3, at 6*a.*

Vidhana Parijata. Vol. I, Fasc. 7, at 6*a.*

List of Books published by the Meteorological Department during the Current Quarter.

Monthly Weather Review, April to September 1904. (Illustrated by 6 plates). Quarto. Paper cover. Re. 1.
Indian Meteorological Memoirs. Vol. XVI, Part II, by Sir John Eliot. Quarto. Paper cover Rs. 3.

List of books published by the Meteorological Department from 1st October 1904 to 31st March 1905.

Monthly Weather Review, April to September 1904. (Illustrated by 6 plates.) Quarto. Paper cover. Re. 1 per month.
Indian Meteorological Memoirs, Vol. XVI. Part II. By Sir John Eliot. Quarto. Paper cover. Rs. 3.

List of Books published by the Meteorological Department during the current quarter.

Monthly Weather Review, October 1904. (Illustrated by 6 plates.) Quarto. Paper cover. Re. 1.
Indian Meteorological Memoirs. Vol. XVI, Part II. By Sir John Eliot. Quarto. Paper cover. Rs. 3.

List of new books published by the Geological Survey of India during the week ending 22nd April 1905.

Records of the Geological Survey of India, Vol. XXXII, Part II. Re. 1.
Memoirs of the Geological Survey of India Palæontologia Indica. New Series. Vol. II. Memoir No. 2. Re. 1.

APPENDIX TO

The Calcutta Gazette.

WEDNESDAY, MAY 24, 1905.

NOTICES TO MARINERS.

THE following Notices are published for general information.

W. A. INGLIS,
Secretary, Marine Department.

CALCUTTA, *the 20th May 1905.*

KOREA, WEST COAST—PING YANG INLET.

Chogon dogu—Extension of shoal.

No. 162 (first publication).—The British Admiralty has given notice (No. 325 of 1905) that the Master of the S.S. *Tatsu Maru* reports that the 2-fathom shoal to the south-westward of Chogon dogu, above Chel tau anchorage, Ping yang inlet, and shown on the Chart at a distance of $1\frac{4}{10}$ miles N. 27° E. from Gai gan misaki, has extended in a S. 22° E. direction for about 4 cables, the depths over the extension being from $1\frac{1}{2}$ to 2 fathoms.

Approximate position on Chart 1656, lat. 38° 40′ N., long 125° 36′ E.

(*Variation 4° Westerly in 1905.*)

This Notice affects the following Admiralty Charts:—Approaches to Ping Yang inlet, No. 1257; Ping Yang inlet, No. 1656: Also, Sailing Directions for Korea, &c., 1904, page 43.

PACIFIC OCEAN—THE PHILIPPINE ISLANDS—LEITE, SAMAR LUZON.

Janabatas channel—Higunum island and Port Sisiran—Rocks reported.

No. 163 (first publication).—The British Admiralty has given notice (No. 327 of 1905) that the undermentioned rocks are reported to exist in the following positions in the vicinity of the Philippine islands:—

1. Leite island, north coast, Janabatas channel. A rock, with a depth of 6 feet over it, is reported in a position from which the eastern extremity of Navahay island bears S. 29° W., distant 5 cables, and the northern extremity of the same island S. 89 W.

   Approximate position, lat. 11° 26½′ N., long. 124° 54½′ E.

2. Samar island, east coast. A sand cay, with submerged reefs and heavy breakers, extending for a considerable distance from its north-west and south-east sides, is reported to be situated about 5 miles S. 65° E. from Higunum island.

   Approximate position, lat. 12° 21′ N., long. 125° 31′ E.

The coast in this locality is said to be inaccurately shown on the Charts.

3. Luzon, east coast. A rock, on which the sea breaks heavily, is reported in mid-channel between Laja island and Tinajuagan point at the entrance to port Sisiran.

Approximate position, lat. 14° 0′ N., long. 123° 41′ E.

(*Variation Nil in 1905.*)

This Notice affects the following Admiralty Charts:—The Philippine islands, No. 943; St. Bernardino and Mindoro straits, No. 2577; San Pedro bay to Libukan islands, No. 2987: Also, Eastern Archipelago, part I, 1902, pages 361, 385, 377.

NEW ZEALAND—SOUTH ISLAND, EAST COAST.

Weld's anchorage—Beacons removed.

No. 164 (first publication).—The British Admiralty has given notice (No. 332 of 1905) that the two beacons leading to Weld's anchorage, and situated on the southern side of Flaxbourne river, have been removed and will not be re-erected; they have consequently been expunged from the Chart.

Approximate position, lat. 41° 50′ S., long. 174° 12′ E.

This Notice affects the following Admiralty Chart:—Plan of Flaxbourne on Chart No. 2178: Also, New Zealand Pilot, 1901, page 267.

EASTERN ARCHIPELAGO—SUMATRA, NORTH-EAST COAST.

Strait of Durian—Wreck in southern approach.

No. 165 (first publication).—The British Admiralty has given notice (No. 337 of 1905) of the existence of a wreck, with two masts above water, in the southern approach to the Strait of Durian, situated at a distance of $2\frac{1}{10}$ miles S. 77° W. from the north point of South Brother island.

Approximate position, lat. 0° 32¾′ N., long. 103° 43¾′ E.

(*Variation 1° Easterly in 1905.*)

This Notice affects the following Admiralty Chart:—Banka strait to Singapore, No. 2757; strait of Durian, No. 2402: Also, China Sea Directory, vol. I, 1896, page 556; and Supplement, 1899, page 41.

EASTERN ARCHIPELAGO.—BORNEO, SOUTH COAST.

Cape Selatan—Intended light.

No. 166 (first publication).—The British Admiralty has given notice (No. 340 of 1905) that it is intended to establish on cape Selatan, at an elevation of 107 feet above high water, a *white group flashing* light of the 5th order showing groups of two short flashes *every ten seconds*, and visible in clear weather from a distance of 16 miles from the bearing of S. 76° E., through east and north, to N. 88° W.; it will be shown from an iron framework support, 108 feet high, painted white. The dwelling will be white with a red roof.

Approximate position, lat. 4° 10½′ S., long. 114° 39′ E.

This light will probably be completed in November, but further notice will be given when it has been established.

(*Variation 2° Easterly in 1905.*)

This Notice affects the following Admiralty Chart:—Eastern archipelago, No. 941b: Also, List of Lights, part VI, 1905, page 95; and Eastern Archipelago, vol. II, 1904, page 266.

EASTERN ARCHIPELAGO—CELEBES, SALAGAR STRAIT.

Pamatata light—Intended alteration in.

No. 167 (first publication).—The British Admiralty has given notice (No. 341 of 1905) that it is intended to alter Pamatata light from white fixed to *white group flashing* showing two short flashes *every ten seconds.*

Approximate position on Chart No. 941*b*, lat. 5° 43½′ S., long. 120° 29′ E.

Further notice will be given when this alteration has been made.

This Notice affects the following Admiralty Charts:—Eastern Archipelago, No. 941b: Also, List of Lights, part VI, 1905, No. 542; and Eastern Archipelago, part II, 1904 page 348.

CHINA SEA—Singapore.

Fort Canning and Mount Faber—Instructions with regard to Time Balls.

No. 168 (first publication).—With reference to Notice to Mariners No. 152, dated 8th August 1896, issued by this Office, the Master Attendant, Straits Settlements, has given notice,* dated 28th April 1905, that the Time Balls on Fort Canning and Mount Faber are dropped daily at 1 P.M., mean-time of the 105th Meridian: being hoisted five minutes previously. The observatory at Mount Faber from which the Balls are dropped automatically by electricity is in latitude 1° 16′ 08″.33N. and longitude 103° 49′ 23″.86 E. When the Time Balls drop at 1 P.M., the corresponding Greenwich mean-time is 6 hours A.M. Should either of the Time Balls fail to drop correctly, through any cause, the ball in fault will be kept up about five minutes, and then lowered by hand; but it will be again hoisted about five minutes before 2 o'clock. When the Time Ball fails to act, or is under repair, the flag W will be hoisted.

An electric time-bell for the use of Shipping has been fitted in the Wharf Superintendent's Office, Tanjong Pagar. This time-signal is in connection with the Observatory Standard Clock and rings automatically at every hour of Greenwich mean-time. Chronometer comparisons may be obtained by applying at the said office.

*N.B.—This Notice replaces Notice of 1st June 1896.

BAY OF BENGAL.

Caution—Passing a black flat-topped buoy.

No. 169 (first publication).—The Master of the S.S. *Surada* reports that when in latitude 10° 50′ N. and longitude 83° 32′ E. he passed a black flat-topped buoy with an eye-bolt or ring on the top. Mariners are hereby warned.

RED SEA.

Caution—Position of water-logged wreck of native dhow.

No. 170 (first publication).—The Master of the S.S. *Gaekwar* reports that on 29th April 1905, he passed water-logged wreck of a native dhow, about 80 feet long, 6 feet out of water aft, and 3 feet forward; right in track of vessels in Red Sea; lat. 27° 02′ N., long. 34° 25′ E., Shadwan light-house bearing N. 38° W. true, 32 miles distance.

Mariners are accordingly warned.

CEYLON, EAST COAST—Trincomali Harbour.

Minden and Grommet Rocks—Buoys marking, at the entrance, withdrawn.

No. 154 (second publication).—The Bombay Government has given Notice (No. 37 of 1905) that the two buoys marking Minden and Grommet Rocks at the entrance of Trincomali Harbour have been withdrawn and will not be replaced.

This Notice affects the following Admiralty Charts:—Trincomali Harbour, No. 816; Trincomali Harbour and Bays No. 815: Also, Bay of Bengal Pilot, 1901, page 115."

ARABIA, NORTH-EAST COAST—Persian Gulf.

Bushire—Regarding certain buoys and beacons in the inner anchorage.

No. 155 (second publication).—With reference to Notice to Mariners No. 428, dated 16th December 1904, issued by this office, the Bombay Government has given further notice (No. 38 of 1905) that the black spar buoy therein mentioned from which single tree bore N. 64° 20′ E. and the red spar buoy from which single tree bore N. 73° E. have both disappeared.

All the remainder of the spar buoys except that from which the single tree bears N. 76° 28′ E. have lost their tops, and are now only plain spars very difficult to pick up.

The red iron pile beacon is leaning considerably to one side, and is liable to be washed away, as also are all the spar buoys.

This Notice affects the following Admiralty Chart:—Abu Shahr or Bushire No. 27, and Sailing Directions, Persian Gulf Pilot, Fourth edition, 1898, page 270.

ARABIA, NORTH COAST—Persian Gulf.

Shatt-al-Arab—Alterations and corrections in the position of buoys at the entrance.

No. 156 (second publication).—In continuation of Notice to Mariners No. 124, dated 20th April 1905, the Bombay Government has given notice (No. 39 of 1905, that the three inner buoys at the entrance to the Shatt-al-Arab river have been moved from the positions in which they were found by R. I. M. S. 'Investigator' as follows:—

No. 1 Buoy N. 65° E. 5¾ cables to Western edge of deep water channel.
No. 2 „ N. 71° E. 7¾ „ „ „ „ „ „ „
Bar Buoy N. 85° E. 11½ „ „ „ „ „ „ „

The positions of all the buoys shown on Admiralty Chart No. 1235 'Mouths of the Euphrates' were found to be incorrect, they now lie in the following positions and depths of water at low water spring tides:—

Outer buoy	...	in 16 feet bearing	S. 52° E.	dist. 15·2 miles	from Fao Light.			
R. W. V. S. buoy known locally as Lawrence buoy	...	in 11 „	„	S. 53° E.	„	11·5 „	„	„ „
No. 1 buoy	...	in 10 „	„	S. 60° E.	„	9·35 „	„	„ „
No. 2 „	...	in 9 „	„	S. 65° E.	„	7·7 „	„	„ „
Bar „	...	in 10 „	„	S. 68° E	„	6·3 „	„	„ „

There is a depth of 10 feet immediately outside No. 2 buoy. In addition to the above there are three small red spar buoys which mark the eastern side of the channel, but they are very difficult to pick up, they lie in the following positions:—

Outer spar buoy	A	in 10 feet	S. 81° E.	dist. 8	cables	from new position of No. 2 buoy.				
Middle „	B	in 11 „	N. 8° E.	„ 5	„	„	„	„	„	„
Inner „	C	in 11 „	N. 26° W.	„ 7½	„	„	„	„	„	of Bar buoy.

Directions for entering the Shatt-al-Arab river.—Pass a convenient distance westward of the outer buoy and steer N. 60° W. until Lawrence buoy bears N.-N.-W. when shape course to pass close to the westward of it (remembering a depth of 7 feet exists 3 cables from the buoy), when abreast of Lawrence buoy steer to pass one cable eastward of No. 1, No. 2 and the Bar buoys, on reaching the latter shape course for Fao light, situated at the telegraph station easily recognized on account of the size of the buildings, which are the largest on the Turkish side of the river.

The above directions if followed will carry 9 feet least water up to the Lawrence buoy, after that is passed the general depth to the gut off No. 1 is 9 feet, but there are several small humps of 7 feet, all of which it is impossible to avoid. Abreast of No. 1 the depth is from 17 to 18 feet in mid-channel, the water shoals very rapidly towards the spar buoys where the bottom is fairly hard, but gradually towards the iron buoys where the bottom is very soft. Between No. 2 and the bar buoy there is a small bar of 12 feet, after which good water will be carried up to the deep water off Fao.

All bearings are true.

Approximate position, lat. 29° 50′ N., long. 48° 30′ E.

This Notice affects the following Admiralty Chart:—Mouth of the Euphrates No. 1235; also Persian Gulf Pilot, fourth edition, 1898, page 286."

CHINA SEA—Cochin China.

Lon (Tre) island and Fanthit—Lights exhibited experimentally.

No. 157 (second publication).—With reference to Notice to Mariners No. 253, dated 25th July 1903, issued by this Office, the British Admiralty has given further notice (No. 3[illegible] of 1905) that on 15th April 1905, a *white group flashing* light showing groups of *three flashes every fifteen seconds*, will be exhibited experimentally from a grey conical tower, 48 feet high, erected on the south-eastern point of Lon island; the duration of each flash will be under one-tenth of a second and the eclipse between each flash in the group three seconds. The light will be elevated 336 feet above high water, and visible in clear weather from a distance of 24 miles from the bearing of N. 26° E., through north and west, to S. 11° E.

Approximate position, lat. 12° 11¼′ N., long. 109° 19′ E.

Also, that on 1st April 1905, a *white fixed* light, elevated 38 feet above high water, and visible in clear weather from a distance of 8 miles, would be exhibited experimentally

from an iron trellis-work structure placed on the north-east wall of the Custom house at Fanthit, on the east side of the entrance to the river.

Approximate position on Chart No. 1261, lat. 10° 54¾′ N., long. 108° 6¾′ E.

(*Variation 2° Easterly in 1905.*)

This Notice affects the following Admiralty Charts:—China sea, Nos. 2661a, 2660a, and 1263; Saigon river to Kam ranh bay, No. 1261; Fan rang bay to Tong king gulf No. 1342; Kam ranh bay to Vung-ro bay, No. 1008: Also List of Lights, part VI, 1905, Nos. 672, 669a; China Sea Directory, Vol. II, 1898, pages 399, 393.

JAPAN—Naikai (Inland) sea.

Simonoseki strait—Shoals in Moji ko.

No. 158 (second publication).—The British Admiralty has given notice (No. 303 of 1905) that a recent survey shows that the undermentioned shoals exist in Moji ko in the eastern part of Simonoseki strait:—

a. A shoal head composed of sand and shells, with a depth of 2¾ fathoms over it situated in a position from which Kajiga hana bears N. 57° E., distant 380 yards, and Dan no ura rear light N. 32° W.

b. A shoal head composed of sand and shells, with a depth of 3 fathoms over it, situated in a position from which Kajiga hana bears N. 71° E., distant 420 yards and Dan no ura rear light N. 31° W.

Approximate position, Kajiga hana lat. 33° 57½′ N., long. 130° 57½′ E.

(*Variation 4° Westerly in 1905.*)

This Notice affects the following Admiralty Charts:—Simonoseki strait, Nos. 532, 1578; Moji ko, No. 3114: Also, Sailing Directions for Japan, &c., 1904, page 502.

JAPAN—Honshu north-west coast—Sado island.

Futami bay—Buoys established.

No. 159 (second publication).—The British Admiralty has given notice (No. 304 of 1905) that buoys have been established to mark the undermentioned shoals in Futami bay, Sado island, in the following positions:—

a. An iron conical buoy, painted in red and black horizontal bands, and surmounted by a spherical topmark, has been moored in a depth of 2½ fathoms, at a distance of 2½ miles N. 41° E. from Daiga hana, to mark Daijoji se in approximately lat. 37° 59′ 50″ N., long. 138° 16′ 45″ E.

b. An iron conical buoy, painted black, and surmounted by a cylindrical topmark, has been moored in a depth of 3½ fathoms at low water, in a position from which Gakeno hana bears S. 88° W., distant 6¾ cables, and Daiga hana S. 46° W., to mark the shoal named Nakano se.

c. A similar buoy has been moored in a depth of 3½ fathoms at low water in a position from which Gakeno hana bears N. 58° W., distant 6¾ cables and Daiga hana S. 53° W., to mark Taka se.

Approximate position, Daiga hana, lat. 37° 58′ N., long. 138° 15′ E.

(*Variation 5° Westerly in 1905.*)

This Notice affects the following Admiralty Charts:—Ando Zaki to Otose Zaki, No. 3003; Futami anchorage on Chart No. 3395; Also, Sailing Directions for Japan, &c., 1904, page 670.

EASTERN ARCHIPELAGO—Sumatra, north coast—Pulo Weh.

Lë Meulè (Tapa Gaja) point—Light established.

No. 160 (second publication).—With reference to Notice to Mariners No. 450, dated 30th December 1904, issued by this Office, the British Admiralty has given further notice (No. 305 of 1905) that a *white flashing* light *every twenty seconds*, thus:—flash *five seconds*; eclipse, *fifteen seconds*, has been established on Lë Meulè (Tapa Gaja) point, the north-

eastern point of Pulo Weh. The light, which is of the 4th order, is produced by acetylene gas.

Approximate position, on Chart No. 219, lat. 5° 53½′ N., long. 95° 21′ E.

This Notice affects the following Admiralty Charts:—Bay of Bengal, No. 70; Bassein river to Pulo Penang, No. 830; Acheh head to Tyingkok bay, No. 2760; Acheh head to Diamond point, No. 219: Also, List of Lights, part VI, 1905, No. 387a; China Sea Directory, vol. I, 1896, page 48; Bay of Bengal Pilot, 1901, page 283.

CHINA, SOUTH-EAST COAST—Kupchi point.

An obstruction reported to the south-eastward.

No. 161 (second publication).—With reference to Notice to Mariners No. 113, dated 4th April 1905, issued by this Office, the British Admiralty has given further notice (No. 315 of 1905) that information has been received through the Board of Trade that the Master of the S.S. *Workfield* reports that, on 24th December 1904, his vessel, drawing 24 feet, struck on some obstruction, probably a rock, south-eastward of Kupchi point in a position from which Black Mountain bore N. 12° W., distant about 4¼ miles. This obstruction has been placed on the Chart as a rock having less than 6 feet over it in the above position, and marked P. D.

Approximate position, lat. 22° 48′ N., long. 116° 10′ E.

(*Variation nil in 1905.*)

This Notice affects the following Admiralty Charts:—China Sea, No. 2661b; Hong Kong to Liautung gulf, &c., No. 1262; Hong Kong to the Brothers, No. 1962: Also, China Sea Directory, vol. III, 1904, page 144.

CEYLON, SOUTH COAST—Colombo harbour.

A new light to be exhibited.

No. 138 (third publication).—The Master Attendant, Colombo, has given notice, dated 27th March 1905, of the following particulars of the new light to be exhibited from the Lighthouse on the south end of North-West Breakwater, Colombo Harbour:—

Name of Light.	Place.	Latitude.	Longitude.	Number of Lights and relative positions.	Colour of Light.	Fixed, flashing, fixed and flash, intermittent, alternating, or revolving.	Interval of revolution of flash.	Miles seen in clear weather from a Ship's deck.	Time Harbour Light is shown.	Colour or any peculiarity of Lighthouse.	Height in feet of centre of Lantern above high water.	Height in feet of Building from base to vane.	When lighted.	Character and order of illuminating apparatus.	Description of fog signal, if any.
South Head, North-West Breakwater.	Colombo Harbour.	6° 57′ N.	79° 51′ E.	One	Green	Fixed	None	Ten	Sunset to sunrise.	Stone colour, iron cylindric.	Ft. 42·66	Ft. 40·25	April 15th	Fixed Green, 5th order.	None.

INDIA, WEST—Malabar coast.

Cochin harbour—Certain buoys removed—Mallipuram flagstaff—Date of exhibition of light.

No. 139 (third publication).—The Presidency Port Officer, Madras, has given notice (No. 13 of 1905) that the Bar and Spit Buoys at the Harbour entrance and the quarantine buoys in the inner harbour will be removed for the ensuing monsoon on the 15th May 1905, and that the light on the Mallipuram flagstaff will be exhibited from the same date to 30th September next

INDIA, WEST—Sind coast.

Karachi harbour—Intended placing of two mooring buoys.

No. 140 (third publication).—The Bombay Government has given notice (No. 35 of 1905) that on and after the 1st May 1905 two mooring buoys will be laid eastward of the Entrance Channel for the accommodation of vessels awaiting berths inside the Harbour.

Positions approximate as follows:—

(*a*) South extreme of East Training Groyne, bears N. 85° E, distant 950 feet, and beacon on East Pier N. 1° 50′ W.

(*b*) South extreme of East Training Groyne, bears N. 21° E., distant 1,025 feet, and beacon on East Pier N. 17° W.

These buoys should not be mistaken for channel buoys.

(The bearings are true.)

This Notice affects the following Admiralty Chart:—Karachi Harbour, No. 40: Also, West Coast of Hindustan Pilot, 1898, page 303, and Supplement, 1903, relating to that work, page 19.

AUSTRALIA, SOUTH—TASMANIA, NORTH COAST.

Emu bay—Light established.

No. 141 (third publication).—The British Admiralty has given notice (No. 269 of 1905), that, on and after 7th February 1905, a *fixed* light, showing *white* from the bearing of S. 25° W., through west and north, to N. 25° E. (obscured from N. 25° E., through east, to S. 65° E.), and *red* from S. 65° E., through south, to S. 25° W., would be established on the head of the breakwater, Emu bay.

Approximate position, lat. 41° 3¼′ S, long. 145° 57′ E.

(Variation 9° Easterly in 1905.)

This Notice affects the following Admiralty Chart:—Plan of Emu bay on Chart No. 1079: Also, List of Lights, part VI, 1905, No. 1450; and Australia Directory, vol. I, 1897, page 625.

INDIAN OCEAN—SEYCHELLES—MAHE.

Port Victoria—Mooring-buoy temporarily withdrawn.

No. 142 (third publication).—The British Admiralty has given notice (No. 271 of 1905) that the red mooring-buoy in the outer harbour of Port Victoria, and shown on the Chart as situated at a distance of 6 cables N. 70° E. from the lighthouse, has temporarily been replaced by a small buoy, painted red. Ships anchoring near this buoy should give it a berth of half a cable to avoid fouling the moorings.

Approximate position, lat. 4° 36¼′ S., long. 55° 28¾′ E.

(Variation 4° Westerly in 1905.)

This Notice temporarily affects the following Admiralty Chart:—Port Victoria, No. 722: Also, Islands in the Southern Indian Ocean, 1904, page 372.

PACIFIC OCEAN—THE PHILIPPINE ISLANDS.

Tanguingui island light—Character altered.

No. 143 (third publication).—With reference to Notice to Mariners No. 105, dated the 25th March 1904, issued by this office, the British Admiralty has given further notice (No. 272 of 1905) that the white fixed lantern light, exhibited on a wooden tripod erected on Tanguingui island, would, in the middle of February, be replaced by a *white group flashing* light showing groups of two flashes *every ten seconds;* this light is shown from a steel tower and should be visible in clear weather from a distance of 17 miles.

Approximate position, lat. 11° 29¼′ N., long. 123° 43′ E.

This Notice affects the following Admiralty Charts:—The Philippine islands, No. 943; St. Bernardino and Mindoro straits, No. 2577: Also, List of Lights, part VI, 1905, No. 602; and Eastern Archipelago, part I, 1902, page 257.

PACIFIC OCEAN—THE PHILIPPINE ISLANDS—SAMAR, WEST COAST.

Katbalogan—Light established.

No. 144 (third publication).—The British Admiralty has given notice (No. 273 of 1905) that a *red fixed* light, visible from a distance of 5 miles, has been established on the extremity of the pier at Katbalogan.

Approximate position on Chart No. 1622, lat. 11° 46′ 40″ N., long. 124° 52′ 15″ E.

This Notice affects the following Admiralty Charts:—San Pedro bay to Libukan islands, No. 2987; ports in the Philippine islands, Katbalogan, &c., No. 1622: Also, List of Lights, part VI, 1905, page 103; and Eastern Archipelago, part I, 1902, page 360.

INDIA, WEST—BOMBAY HARBOUR APPROACH.

Outer light-vessel—Further temporary alteration in—.

No. 145 (third publication).—With reference to Notice to Mariners No. 49, dated 4th February 1905, issued by this office, the British Admiralty has given further notice (No. 274 of 1905) stating that the Outer temporary light-vessel, exhibiting a white revolving light every twenty seconds, elevated 36 feet above the sea, and visible in clear weather from a distance of 10 miles, in the approach to Bombay, will be withdrawn for repairs, and will be replaced at once by a pilot schooner.

A square red flag will be hoisted on board this schooner during the daytime to distinguish this vessel from the pilot vessel on the outer station, and at night a *white fixed* light, elevated 56 feet above the sea and visible in clear weather from a distance of 5 miles, will be exhibited between the masts. The anchor light will also be shown, and a blue light burnt every half hour.

It is anticipated that the temporary light-vessel will be again in position before the end of April.

Approximate position on Chart No. 2621, lat. 18° 49′ N., long. 72° 47′ E.

Further Notice will be given when the permanent light-vessel has returned to her station.

This Notice affects temporarily the following Admiralty Chart:—Bombay harbour No. 2621: Also, List of Lights, part VI, 1905, No. 237; and West Coast of Hindustan Pilot, 1898, page 197.

RED SEA—Perim island.

Balfe point light—Arc of obscuration.

No. 146 (third publication).—With reference to Notice to Mariners No. 15, dated the 9th January 1905, issued by this office, the British Admiralty has given further notice (No. 276 of 1905) that on and after 15th April the light (*white fixed*) on Balfe point, Perim island, will be so screened as to be visible only from the bearing of N. 15° W., through north and east, to S. 14° W., and obscured in other directions.

Approximate position, lat. 12° 39½′ N., long. 43° 23½′ E.

This re-establishes the arc of obscuration formerly screened at this light.

This Notice affects the following Admiralty Charts:—Red sea, No. 8e; Straits Babel Mandeb, No. 3180; Perim island, No. 2592: Also, List of Lights, part V, 1905, No. 1459, part VI, No. 143; and Red Sea and Gulf of Aden Pilot, 1900, page 233.

RED SEA, EASTERN SHORE.

Jiddah—Rocks in approaches.

No. 147 (third publication).—With reference to Notice to Mariners No. 304, dated 18th September 1903, issued by this office, the British Admiralty has given further notice (No. 288 of 1905) of the existence of the undermentioned rocks in the approaches to Jiddah:—

a. A rock, with a depth of 2 fathoms over it, situated at a distance of 2$\frac{1}{10}$ miles N. 63° W. from the centre of the northern extremity of Jiddah city wall. There are depths of from 6 to 8 fathoms around this shoal.

b. A coral head, with a depth of 2 fathoms over it, situated at a distance of 1$\frac{4}{10}$ miles N. 64° W. from the centre of the northern extremity of Jiddah city wall.

There is another head, with a depth of 2 fathoms over it, situated at a distance of 75 yards North from the above.

These heads are surrounded by depths of from 3½ to 5 fathoms.

Approximate position of northern extremity of city wall, lat. 21° 29½′ N., long. 39° 12½′ E.

c. A rock, named Erg ar Suniya, with a depth of 3½ fathoms over it, situated at a distance of 2$\frac{4}{10}$ miles N. 64° W. from the white stone beacon on Gaham. This rock is surrounded by depths of 8 to 9 fathoms.

d. A rock, named Al Fokani, with a depth of 2½ fathoms over it, situated at a distance of 3 miles N. 73° W. from the white beacon on Gaham. This rock, which is surrounded by depths of from 10 to 15 fathoms, is evidently the danger reported by Commander Cartwright, of H.M.S. *Cossack*, in Notice to Mariners No. 670 of 1903, this office No. 304, dated 18th September 1903.

e. A shoal, named Al Khruba Baharia, with a depth of 6 fathoms over it, situated at a distance of 3½ miles N. 80° W. from the white stone beacon on Gaham. This shoal, which is erroneously named Al Fokani on the Charts, is surrounded by depths of 10 fathoms.

Approximate position, Gaham beacon, lat. 21° 27½′ N., long. 39° 8′ E.

(*Variation 3° Westerly in 1905.*)

This Notice affects the following Admiralty Chart:—Jiddah, No. 2599: Also, Red Sea, &c., Pilot, 1900, pages 270, 271, 272.

CHINA SEA, SOUTHERN PART—Tambelar islands.

Gesine Bronsbank—Non-existence of—.

No. 148 (third publication).—The British Admiralty has given notice (No. 290 of 1905) that the Commander of H.M.N. Surveying Vessel *Van Doorn* has made a close but unsuccessful search for the Gesine Bronsbank shoal.

This shoal was reported to have been seen by the German ship *Gesine Bronsbank* in 1879, but apparently no soundings were taken. Some years previously to this H.M. Surveying Vessel *Rifleman*, when engaged in the survey of these waters, passed close to, if not over, the reported position without observing any indication of shoal water, and since then the Master of the British ship *William Le Lacheur* reports having obtained a sounding of 25 fathoms, sand, in the reputed place of the shoal, but saw no signs of any danger; there was, however, an accumulation of sea-weed and fish spawn, which the Master of the *Gesine Bronsbank* probably mistook for a shoal. It is considered, therefore, that this shoal does not exist, and it has consequently been expunged from the Charts.

Approximate position, lat. 1° 11′ N., long. 106° 58′ E.

This Notice affects the following Admiralty Charts:—Eastern archipelago, No. 941a; China sea, No. 2660a: Also, China Sea Directory, vol II, 1899, page 54.

EASTERN ARCHIPELAGO—Sumatra, north-east coast—Padang river.

Banda Kalipa—Light established.

No. 149 (third publication).—The British Admiralty has given notice (No. 291 of 1905) that a *white fixed* light, elevated 46 feet above high water, and visible in clear weather from a distance of 12 miles from the bearing of S. 68° W., through south, to S. 29° E., has been established on an iron framework support, 42 feet high, and painted white, erected on the southern side of the entrance to Banda Kalipa, river Padang

Approximate position on Chart No. 1355, lat. 3° 27′ N., long. 99° 18′ E.

(*Variation 1° Easterly in 1905.*)

This Notice affects the following Admiralty Charts:—Diamond point to pulo Berhala, No. 1353; Malacca strait, No. 1355: Also, List of Lights, part VI, 1905, page 65; and China Sea Directory, vol. I, 1896, page 86.

EASTERN ARCHIPELAGO—Sumatra, west coast.

Koninginne bay—Shoals in approach.

No. 150 (third publication).—The British Admiralty has given notice (No. 292 of 1905) of the existence of the undermentioned shoal, and particulars concerning others, in the approach to Koninginne bay, as follows:—

a. A bank, with a depth of 6¼ fathoms over it, at low-water springs, exists in a position S. 42° W. 3¾ miles from Sungi Bramei light.

b. The shoal shown on the Chart, with a depth of 3 fathoms over it at a distance of 3¾ miles S. 76° W. from Sungi Bramei light, is situated at a distance of 3¼ miles S. 70° W. from Sungi Bramei light, and has a depth of 2¼ fathoms over it at low-water springs.

c. The least depth on Regentes shoal, situated S. 75° W. 4¼ miles from Sungi Bramei light, is 6 feet at low-water springs, and not 2¼ fathoms as shown on the Chart.

Approximate position, Sungi Bramei light, lat. 1° 2¼′ S., long. 100° 22½′ E.

(*Variation Nil in 1905.*)

This Notice affects the following Admiralty Chart:—Ujong Masang to Ujong Indrapura, No. 709: Also, China Sea Directory, vol. I, 1896, page 301; and Supplement, 1899, page 20.

CHINA, EAST—Yellow sea—Pechili and Liau tung gulf.

Kuang tung peninsula—Wrecks in the vicinity—Navigation dangerous.

No. 151 (third publication).—With reference to Notice to Mariners No. 86, dated 20th March 1905, issued by this office, the British Admiralty has given further notice (No 293.

Rs. 15,100, the only other bidders being two persons who were, as a matter of fact, servants of the defaulting *patnidar*, Parmeshwar Lal, that is to say, of a person debarred by section 9 of the Regulation from the right to bid at the auction. So far Mr. Lea was entirely unsuspicious and imagined no collusion; but, while Mr. Rolt was absent in England during the months of June to November, 1903, as well as after his return to India, Mr. Lea's suspicions were aroused by rumours, which were at first more or less vague, but subsequently took definite shape and were directed against this transaction in particular. In May, 1904, Mr. Rolt submitted another recommendation for the purchase in similar circumstances of the Surjapur *patni taluk* at an outside price of Rs. 12,000 or Rs 13,000, calculated as representing 12 or 13 years' purchase. In consequence, however, of what he had heard, Mr. Lea scrutinised the valuation himself and sanctioned bidding up to Rs. 10,000 only; and the circumstance that the property was eventually sold to the Estate for Rs. 100 short of the limit thus confidentially fixed, the only bidder-up being in this case also in the service of the defaulter, served, as Mr. Lea has himself said, to convince him of Mr. Rolt's malpractices.

Information against Mr. Rolt obtained from Mosadi Singh.

2. Meanwhile, one Mosadi Singh, who had just been suspended by Mr. Rolt from the treasurership of the Khagra Estate, had visited Purnea in order to appeal to the Collector against Mr. Rolt's order; and Mr. Lea, thinking that this person was likely to know of the existence of corruption, if there had been any, and that he would probably then be disposed to disclose anything within his cognizance against the Manager, took the opportunity of questioning him on the subject. The *ex*-treasurer, who, so far as Mr. Lea knew, had no idea that he was about to be questioned regarding the Mohishakhore transaction, at once vouchsafed detailed information regarding it, stating definitely that, to his knowledge, Mr. Rolt had, by arrangement with the *patnidar*, received Rs. 5,000 for having purchased the *patni* at an extravagant figure; that the *patnidar* had, in order to pay Mr. Rolt at once (as Mr. Rolt was proceeding to England and the purchase-money was not available before the confirmation of the sale), borrowed funds from the firm of Kunjo Lal Kanhaya Lal; and that Mr. Rolt had received notes in exchange for the cash-bribe from a certain Muhammad Hussain and had remitted these to his bankers in Calcutta. Mosadi Singh appears to have asserted at the same time that the cause of his suspension by Mr. Rolt had been his refusal to agree to retain half the sum of Rs. 2,000 which stood to the credit of the heirs of a deceased tenant, Gopi Singh, in the accounts of the Estate, an assertion into the truth of which Mr. Lea, arguing that it was immaterial what was the real cause of the informer's obvious hostility towards Mr. Rolt, thought it useless to enquire. He considered it necessary, however, to investigate the specific allegations made by Mosadi Singh; and, recognising that information derived from such a source should be viewed with caution, he proceeded at once to test it by obtaining, through the Income-tax Deputy Collector, the books of Parmeshwar Lal, Kunjo Lal Kanhaya Lal, and Muhammad Hussain, and referring to the note-register kept by the Alliance Bank of Simla in Calcutta.

Corroboration of informer.

3. The result of the enquiries thus made by Mr. Lea was that he found evidence which, while it did not completely substantiate Mosadi Singh's statement, appeared to corroborate it in the main. He discovered an entry in the book of Parmeshwar Lal purporting to show that the *patnidar* had, on the 22nd [illegible]nsider 1903, taken from the firm of Kunjo Lal Kanhaya Lal a loan of Rs. 4,0[illegible] interest on which was to be paid by the Manager of the Khagra Esta[illegible]anation although the entry was not in the same handwriting as most of the oth[illegible]rdingly in the book, this circumstance did not strike him as suspicious, since book was not in one person's writing and there were other not dissim[illegible] He further ascertained that certain notes, which had been remitted [illegible]us good to the Alliance Bank of Simla in Calcutta on the 27th June, 1903, w[illegible] Mr. Rolt in Muhammad Hussain's account-book, but that there was no entry [illegible]ndication having been paid out to any one, although in all other cases, includ[illegible] other notes given to Mr. Rolt, the names of the persons to whom [illegible] been passed on, were mentioned. These seemed to him to be

substantial pieces of evidence against Mr. Rolt such as to justify his suspension and a full enquiry into his conduct; and the fact that they did not complete the links in the chain and that the persons concerned (apart from Mosadi Singh) were, as far as he knew, not hostile to Mr. Rolt, but rather the reverse, tended to prevent his imagining that there was a preconcerted plot against the Manager.

Confidential report and recommendation to Commissioner for Mr. Rolt's suspension and regular departmental enquiry.

4. The further enquiry contemplated by Mr. Lea was a departmental one; and, that being so, he deliberately refrained from putting Mr. Rolt upon his guard by calling upon him for any explanation at that stage, and also decided to ignore more than one warning received from Mr. Rolt to the effect that the latter had discovered that there was a conspiracy on foot against him. On the 6th June, 1904, Mr. Rolt asked for an interview; but, as Mr. Lea was about to proceed to Bhagalpur to lay the whole case before Mr. D. J. Macpherson, the Commissioner, he postponed granting it till his return. On the 10th idem, Mr. Lea repaired to Bhagalpur; and next day he handed to the Commissioner a confidential report recommending that Mr. Rolt should be suspended with a view to the holding of a departmental enquiry, and that, until the Board of Revenue could depute a strong officer to the post, Maulvi Shamsuzzoha, a Deputy Magistrate at head-quarters, should be placed temporarily in charge of the Estate. On the 13th idem, after his return to Purnea, Mr. Lea had, by appointment, his deferred meeting with Mr. Rolt; and at it, according to a written account of the conversation which was forwarded to the Commissioner at the time, he admitted to Mr. Rolt that he was engaged in enquiries into rumours which had long been current against him, but declined to give him any further information, and assured him that, as soon as definite charges were framed, he would be allowed an opportunity for explanation.

Orders for Mr. Rolt's suspension issued by Board and submission of Mr. Rolt's resignation

5. Mr. Lea's report of the 11th June was on the 13th idem forwarded by Mr. Macpherson to the Board with a letter stating that it was the result of "enquiries made confidentially so as not to arouse suspicion that action was being taken;" pointing out that there seemed to be "sufficient *primâ facie* evidence to establish the charge that Mr. Rolt had corruptly taken a sum of Rs. 5,000 in connection with the sale;" raising the question whether the case could be brought within the four corners of the Indian Penal Code; and recommending that the Board should, without waiting for an opinion on the legal point, order the immediate suspension of Mr. Rolt pending an enquiry (*i.e.*, a departmental enquiry) by the Collector into his conduct. The Board at once decided on suspension; and their orders directing this and the appointment of Maulvi Shamsuzzoha to relieve Mr. Rolt were received on the 15th June; and on the 16th idem they were communicated to Mr Rolt, who at once protested against the selection of the Maulvi as being a personal enemy. The latter had, some time before, decided a rioting case in such a way as to throw discredit upon Mr. Rolt's version of the facts, and Mr. Lea, on the proceedings coming before him judicially, had himself taken a different view; but Mr. Lea had never questioned the Deputy Magistrate's good faith, and, apart from this incident, he was unaware of anything to suggest that he was hostile to Mr. Rolt. He, therefore, insisted that the orders of the Board being given effect to; and on the 17th June he proceeded to Kishanganj to hold what he still intended to be a departmental enquiry. On the 18th idem Mr. Rolt was informed of this; and he was at the same time supplied with a copy of the confidential report, and the statements annexed thereto, which had been submitted to the Commissioner. On the next day another interview took place. It is unfortunate that Mr. Lea did not make a note of what passed between him and Mr. Rolt on this occasion; but at least is clear, that Mr. Rolt, while protesting his innocence and his ability to explain everything satisfactorily, definitely stated (1) that he had borrowed Rs. 2,500 in notes from one Harakh Chand on the security of his furlough pay, an allegation which he wished to have verified by a reference to Harakh Chand's books, and (2) that he had borrowed Rs. 2,000 from the same source in cash at the end of April on the security of a diamond. The outcome of what was evidently a painful meeting was that Mr. Rolt

tendered his resignation, and that Mr. Lea, who was himself doubtful of the success of a criminal prosecution, undertook to recommend its acceptance and to stay his hand till the receipt of further orders. The resignation was forwarded at once to the Commissioner with the recommendation that it should be accepted, that Mr. Rolt should be allowed to leave Kishanganj, and that the proposed enquiry should be dropped; but Mr. Lea did not in his letter to Mr. Macpherson state that he himself had promised to stay proceedings, although he intimated that he was doing so. On the 19th June Mr. Macpherson replied by telegram that he would forward the resignation, but could not support the recommendation as to its acceptance, and that the enquiry into the Mahishakhore transaction had better be proceeded with.

II.—Order for Mr. Rolt's prosecution issued by Board, and preliminary enquiry held by Mr. Lea.

6. In the interval the Board had consulted the Legal Remembrancer on the point of law raised in Mr. Macpherson's letter of the 13th June, namely, whether the facts indicated constituted an offence punishable under the Penal Code. The Legal Remembrancer replied that Mr. Rolt should be prosecuted under certain sections, which he specified; the Board accepted this advice; and the result was that Mr. Macpherson's first telegram of the 19th June to Mr. Lea was followed on the same date by another intimating that the Board had directed that Mr. Rolt should be prosecuted. For the prosecution of Mr. Rolt, therefore, the Board were responsible; and their order at once altered the whole position, inasmuch as it rendered a departmental enquiry impossible, and thus affected Mr. Lea's ability to carry out his promise that Mr. Rolt should have an opportunity of exculpating himself in the departmental stage of the case. But Mr. Lea apparently failed to recognise this; and, without informing Mr. Rolt that the instructions for his prosecution had arrived and that he had been directed to resume action, he proceeded on the 20th June to make an enquiry with a view to the preparation of a formal criminal complaint against Mr. Rolt, who had left Kishanganj after tendering his resignation. During this enquiry, at which Mr. Lea refused to allow a pleader to be present on behalf of Mr. Rolt, the statements of the persons examined were taken on oath.

Rejection by Board of Mr. Rolt's resignation, and intimation to him of intended prosecution.

7. On the 23rd June the Board, after receiving Mr. Rolt's resignation, intimated that it could not be accepted and that the prosecution must be proceeded with; and simultaneously, in answer to a telegram in which Mr. Rolt had represented to the Senior Member that there was a "gigantic plot against him" and that he could explain everything if only permitted to do so, Mr. Rolt appears to have been informed direct that the orders already passed must be adhered to. Mr. Rolt was then made to vacate the Manager's bungalow; Maulvi Shamsuzzoha was installed in a portion of it; and steps were taken by the latter to warn the clerks in the Estate-office not to hold any unauthorised communication with Mr. Rolt on pain of rendering themselves liable to prosecution for a breach of the Official Secrets Act. The evidence taken by Mr. Lea at the enquiry of the 20th June was submitted to the Commissioner on the 27th idem and forwarded to the Board on the 3rd July. On the 1st July Mr. Rolt wrote to Mr. Lea complaining that he was still in the dark as regards his case, once more asking that he might be heard in explanation, and expostulating against the hard treatment to which he considered he was being subjected. Again on the 4th July he sent Mr. Lea a letter in which he implored him to "see and admit his mistake," and observed: "You believed what was told you; but is it now too late for me to try to prove that the representations made to you were false?" On the 6th July a telegram from the Board, passed on the receipt of the evidence forwarded by the Commissioner on the 3rd idem, reiterated the former order Mr. Rolt's prosecution, and on the 10th idem, the day after the this communication, Mr. Lea for the first time informed Mr. Rolt cution had been directed. The delay is certainly to be regretted; palliated by the fact that Mr Lea, who was evidently still in abandoning the idea of a prosecution, had so far been labouring erroneous impression, stated in his letter of the 27th June to the sioner, that the previous sanction of the Government was required

be obtained before Mr. Rolt, being a Manager under the Court of Wards and in that capacity a public servant, could be prosecuted.

Institution of criminal case and commitment of Mr. Rolt for trial by High Court.

8. On the 11th July a formal complaint was sent to Mr. H. H. Heard, the Subdivisional Officer of Kishanganj. The charge being one of criminal breach of trust and the case consequently a warrant-case, a warrant was issued by Mr. Heard for Mr. Rolt's arrest; but it was endorsed for bail, although the offence was a non-bailable one. On the other hand, the process was issued notwithstanding the receipt of a telegram considerately sent by Mr. Lea with the express object of indicating that Mr. Rolt might be expected to appear of his own accord; and Mr. Rolt was in fact formally arrested and released on his own recognizances by the Assistant Superintendent of Police. During the earlier stages, at least, of the proceedings prior to commitment—the facts as to the later stages are disputed—Mr. Rolt was required to occupy the dock. The commitment was to the Sessions Court of Purnea; but, on Mr. Rolt's application, the trial was transferred to the High Court. A transfer from Purnea Mr. Lea regarded as perfectly reasonable; but he opposed the proposed change of venue to Calcutta on the ground of inconvenience and delay, and a transfer to the district of Bhagalpur, the nearest district in which a European Jury could be empanelled, was suggested instead as unobjectionable.

III.—Trial before the High Court.

9. What occurred at the trial before the High Court may best be gathered from a Minute, dated the 26th December last, by means of which the Hon'ble Mr. Justice Henderson, the presiding Judge, brought to the notice of the Government of Bengal, and commented on, the conduct of several of the officers responsible for the prosecution or concerned in the proceedings leading up to it. The attention of the Lieutenant-Governor had been attracted to the case, as reported in the newspapers; and His Honour had asked the learned Judge to favour him with an authentic report of the evidence and of his observations thereon. Mr. Justice Henderson had replied that he was preparing the Minute which has been referred to above and is now reproduced as Appendix A to this Resolution. It will be observed that the trial was stopped at the request of the Jury, before the conclusion of the evidence for the prosecution, but after ten witnesses, including Mr. Lea, had been examined. The learned Judge questioned the sufficiency of the grounds for the suspicious attitude assumed by Mr. Lea from the beginning; he appears to have doubted whether there was ever even a *primâ facie* case against Mr. Rolt; he described the whole charge as "a wicked concoction," which, apparently, ought to have been detected in the first instance; he attributed the futile prosecution to the action of Mr. Lea in persistently keeping Mr. Rolt in the dark and refusing to hear the explanations which, from time to time, the latter had expressed himself as ready and anxious to offer; he blamed Mr. Lea for having, at the interview of the 13th June, misled Mr. Rolt by giving him to understand that there were no accusations of any kind against him; and he condemned Mr. Lea's methods, particularly in connection with his having, with the approval of the Commissioner, recorded statements in the absence of Mr. Rolt, in having administered oaths to the deponents, in having made over the case against Mr. Rolt to an interested officer like Mr. Heard, and in offering nominated an enemy such as Maulvi Shamsuzzoha to succeed in the charge ement; he took exception to the unnecessarily harsh treatment to which knowle olt had been subjected by Mr. Heard as the enquiring Magistrate, and of prev bias shown by the latter throughout the proceedings; he found occasion successfu d with suspicion the connection with the case of Maulvi Shamsuzzoha; Mr. Jus concluded by expressing the opinion that, "if Mr. Lea had displayed a and ask re tact and been a little less prone to take for granted what was said, seei by the dismissed treasurer and other persons who were alleged, of explain so admitted, to be hostile to Mr. Rolt, and if he had allowed At the sa to give an explanation or had himself made enquiries as to matters re-examina Rolt had put before him, this unfortunate trial would never have knew what e." information

IV.—Appointment of Committee, and issue of orders for compensation of Mr. Rolt.

10. On receipt of the learned Judge's Minute the Lieutenant-Governor determined at once to call for explanations from the officers whose action had been adversely criticised. At the same time His Honour felt that he could not expect the Board of Revenue to re-employ Mr. Rolt in charge of estates under the Court of Wards, as recommended by the Jury, unless certain other charges pending against him were investigated and the Board were satisfied that he might be trusted. Mr. T. W. Richardson, a District and Sessions Judge, and Mr. J. G. Cumming, a Magistrate and Collector, were accordingly appointed a Committee to enquire and report to the Board on the administration of the Khagra Estate by Mr. Rolt with regard to those other charges; and they were instructed also to ascertain how far Mr. Rolt admitted the truth of particular statements of fact extracted from the explanations above alluded to. Their report under the former head showed that the other charges could not be established; and the Government thereupon accepted the recommendation of the Board that Mr. Rolt should be held eligible for further employment under the Court of Wards and compensated for the expenses incurred by him in defending himself before the High Court and in appearing before the Committee. As to the remaining part of the Committee's enquiry, the explanations above referred to, the extracts with which the Committee were desired to deal, the counter-statements made by Mr. Rolt before them, the rejoinders of Mr. Lea, Mr. Heard, and Maulvi Shamsuzzoha, and the Committee's conclusions, will be found in Appendix E. Various subsidiary statements and documents tendered by Mr. Rolt with the object of further traversing the explanations of the officers concerned generally and that of Mr. Lea in particular, raising fresh issues, putting forward other arguments in his favour, furnishing details as to his previous employment under the Court of Wards and the acknowledgements of his good services obtained by him from different officials, and predicating what his case before the High Court would have been had it been necessary for him to enter upon his defence, were received by the Committee and have been forwarded to the Government. These were not made in the presence of, or shown to, the officers impugned, and in some cases it was expressly requested by Mr. Rolt that the additional matter referred to should be treated as confidential. The Committee had, it is true, been authorised to record and forward any statements which Mr. Rolt might wish to offer on the whole case or on points other than those touched upon in the extracts; but the subsidiary statements so admitted, while relevant to the issue already disposed of as to the guilt or innocence of Mr. Rolt, are quite irrelevant to the question now under consideration, namely, the propriety or impropriety of the conduct of the officers concerned in respect of the circumstances as known to them before the prosecution and trial. They were, moreover, as has been indicated, made behind the backs of those officers, who have never had any opportunity of discussing them; and they have in consequence been excluded from the scope of this Resolution.

V.—Conduct of officers concerned.

11. The question which now remains for consideration is as to how far the Commissioner (Mr. Macpherson), the Collector (Mr. Lea) and the two Deputy Magistrates (Mr. Heard and Maulvi Shamsuzzoha) are to blame for the part taken by them in the proceedings ending in Mr. Rolt's trial and acquittal in the Mahishakhore case. In dealing with it, it will be convenient first of all to take up *seriatim* the specific points noticed by Mr. Justice Henderson and the comments made by him in so far as they relate to each officer, and to consider the explanation offered in each instance.

The Commissioner, Mr. D. J. Macpherson.

12. As regards the Commissioner, the points upon which an explanation seemed to be necessary and was accordingly called for are—

(*a*) how far and why, notwithstanding Mr. Rolt's previous good record, he directed the Collector not to call upon Mr. Rolt for an explanation of his conduct or to give him any indication of the charges made against him; and

(*b*) whether he ordered the preliminary enquiry conducted by the Collector, and advised him not to allow Mr. Rolt to be present at it.

The explanation submitted by Mr. Macpherson is to be found in paragraphs 4 to 10 of his letter No. 859W., dated the 9th January, 1905, a copy of which is annexed as Appendix B. Mr. Macpherson explains that he, like Mr. Lea, regarded the facts connected with the sale of the Mahishakhore *patni* with extreme suspicion, and that he felt convinced that all incriminating evidence in the Manager's office would be suppressed, if any information as to the discoveries so far made were communicated to Mr. Rolt while he remained in control. He admits that, in refusing to enlighten Mr. Rolt pending the receipt of orders for his suspension, Mr. Lea was acting under his instructions. Further, he states that he did instruct Mr. Lea to hold the enquiry alluded to; but that the enquiry which he contemplated was a purely preliminary one, to be held in anticipation of formal departmental proceedings, for the purpose merely of ascertaining whether the persons concerned in the Mahishakhore transaction, amongst others, almost all of whom were regarded as probable accomplices, would make any statements at all. Finally, he reports that he did not instruct Mr. Lea to record on oath any statements which might be tendered, and that he is under the impression that he did express the opinion that it would be better if Mr. Rolt were not present at that stage—a course which, he submits, was not, in the circumstances, irregular or unfair to Mr. Rolt. The Lieutenant-Governor considers these explanations to be entirely satisfactory.

13. In connection with the conduct of the Collector there are certain matters referred to in Mr. Justice Henderson's Minute which the Lieutenant-Governor deems it scarcely necessary to discuss in this Resolution, both because they are of comparatively minor importance and because His Honour has nothing to add to what Mr. Lea himself has said regarding them in the full explanation submitted with his letter No. 1, dated the 8th January, 1905, as reproduced in Appendix C below. It is proposed, therefore, to turn at once to the main points animadverted upon by the learned Judge.

The Collector, Mr. J. H. Lea.

(1) Mr. Lea, it is remarked in the Minute, had up to the 21st May, 1904, nothing to go upon but mere rumour or gossip started while Mr. Rolt was in England. On the evidence before the High Court, it would, apart from any other circumstances in the case and in view of the fact that the sanction to the purchase was accorded by Mr. Lea and approved by the Commissioner, who also eventually confirmed the sale, be extremely difficult to say that the report submitted by Mr. Rolt, when he asked for the sanction, showed any intentional overvaluation; and from the circumstances arising t of the presence as bidders of none but servants of the defaulting *patnidar* ..ere was little, if anything, to excite suspicion. Moreover, the learned Judge goes on to observe, Mr. Lea knew that Mr Rolt was being charged with matters which meant absolute ruin to him; he knew that charges of a like nature had been preferred before unsuccessfully; he knew that Mr. Rolt had been highly spoken of by former officials; and yet he took the course of giving him no clue to the charges, and refused to hear the explanations which he offered. Considering that Mosadi was a servant dismissed by Mr. Rolt on charges involving serious dishonesty, and having regard to Mr. Lea's knowledge of the previous intrigues against Mr. Rolt and the opinions of previous Collectors, Commissioners, and Members of the Board as to his successful management in spite of all he had had to contend against, Mr. Justice Henderson would have expected him to send for Mr. Rolt and ask for an explanation. A sense of ordinary fairness would, it is said, seem to suggest that Mr. Rolt ought to have had an opportunity of explaining before his suspension, and certainly before his prosecution. At the same time the learned Judge admits that Mr. Lea's statement in re-examination—that his reason was that he feared that, if Mr. Rolt once knew what was being done, he would make it very difficult to obtain further information—might possibly account for his action.

In considering these—and, indeed, all the other—strictures passed upon Mr. Lea's conduct, it ought, as it seems to the Lieutenant-Governor, to be borne in mind that they are based entirely upon answers for the most part given to questions put with admirable skill and with the perfectly legitimate object of raising an impression unfavourable to the prosecution and *pro tanto* favourable to the defence; whereas, as is obvious from Mr. Lea's explanations, some of the statements thus made by him were incomplete, while others were open to misconstruction, and he did himself less than justice in the witness-box. The gravamen of the charge against him—and he is the officer primarily and principally concerned—lies in the observations summarised above, and it may best be dealt with under the main heads indicated, namely:—

(*a*) the undue attention paid to mere rumour;

(*b*) the want of sufficient grounds for doubting Mr. Rolt's valuation of the *patni* and viewing with suspicion the circumstances connected with the auction sale;

(*c*) the reliance placed upon the information obtained from Mosadi Singh; and

(*d*) the withholding of information from Mr. Rolt, together with the refusal to give Mr. Rolt an opportunity of explaining before he was suspended, or, at least, before he was prosecuted.

As to (*a*), Mr. Lea appears to the Lieutenant Governor to have shown conclusively that, as stated by him in his evidence before the High Court, there were serious rumours against Mr. Rolt; and His Honour is of opinion that it was impossible for him to ignore their existence. In this connection it may also be remarked that there is nothing to indicate that Mr. Lea's treatment of Mr. Rolt was such as to encourage his enemies to rise up against him. On the contrary, it would seem that throughout Mr. Lea endeavoured to make, as far as possible, no change in his demeanour towards Mr. Rolt in public. The fact has, indeed, been made the subject of adverse comment; but it is indicative only of Mr. Lea's desire not to prejudice Mr. Rolt unnecessarily.

As to (*b*), it appears that the purchase of the *patni* tenure, which is scattered over a number of villages, some of them being near Khagra, was recommended by Mr. Rolt in a demi-official letter delivered to Mr. Lea on the day before the sale. Mr. Rolt's delay in making the recommendation was itself unfortunate. The fact that the mahal would probably be sold must, in accordance with the law, have been notified at least one month before; and as the purchase of such under-tenures by a parent estate is by no means a matter of routine and should be proposed only for special reasons, Mr. Rolt's recommendation and the grounds for it ought not to have been placed before the Collector at the last moment. The letter referred to contained the following statements:—

"The annual profit is known to me to be at least Rs. 1,000. Under Rule 23, heading 1 (*a*), page 55 of the Wards Manual, purchases of *patni* mahals are specially laid down by the rules. Under Circular No. 3 of 1902 it is ordered to inform the Collector demi-officially the price we should be prepared to bid up to. I have therefore submitted this report demi-officially. Taking the profit as Rs. 1,000, which, I am satisfied, is on the right side, and working out the purchase price in accordance with Table V, column 7 of Return XXXI, page 115 of the Wards Manual, the price which we could bid up to is Rs. 17,000 odd, but we should be able to purchase the mahal for about Rs. 15,000; unless Prithi Chand's people run up the bidding, when we could go up to Rs. 17,000."

The following figures appear to have been then given on the back of the first page of the letter in question:—

$$(\tfrac{9}{10} \text{ of column 10—column 2}) \times 18.$$

$$(\tfrac{9}{10} \times 3{,}256—2{,}206) \times 18.$$

$$=(\tfrac{9}{10} \times 1{,}050) \times 18.$$

$$= 9 \times 105 \times 18 \text{ or } 17{,}010.$$

Mr. Lea, when eventually he made enquiries into the matter, came to the conclusion that the tenure was worth from Rs. 8,000 to Rs. 9,000. He ascertained that the rent-roll, as reported by the Assistant Settlement Officer, was Rs. 3,070, and, deducting from this 10 per cent. on account of the cost of collection, *i.e.*, Rs. 307, and the rent payable to the superior landlord, *i.e.*, Rs. 2,205, he estimated the net demand to be Rs. 558. The ordinary selling price of *patnis* he found to be from 8 to 12 years' purchase; and, allowing in the case of this *patni* an extreme outside limit of 15 years' purchase, he calculated that the value ought not to have been computed at more than Rs. 8,370. Parmeshwari Lal, the *patnidar*, when examined by Mr. Lea in the first instance, stated that his net income was approximately Rs. 500 only; and to this he adhered before the Lower Court, where his evidence upon the point was as follows:—

"My cost of collection comes to upwards of Rs. 400 a year. My litigation expenses amounted to Rs. 200 to Rs. 250 a year. On the whole my average profits from the *patni* came to about Rs. 500. I allowed the *patni* to go to sale because of the much litigation in which I was being involved. It was not a profitable mahal to me."

Mr. Lea had, therefore, good grounds for thinking that Mr. Rolt had put an excessive value on the *patni*; and the possibility of this having been due to more carelessness on the part of Mr. Rolt in deducting the 10 per cent. on account of the cost of collection from the net, instead of the gross, income, and in taking 18 years' purchase as the basis of calculation, was apparently not overlooked. But in applying for an establishment to manage this very property after his return from leave, Mr. Rolt had stated that the 10 per cent. charge for the cost of collection would amount to Rs. 300; and the Table V referred to by him is not a table setting forth the rates at which tenures are to be purchased, but is a table showing how all kinds of landed property, including zamindaris, may be valued for the purposes of a purely statistical return. Mr. Lea, in consequence, was inclined to look upon Mr. Rolt's valuation as having been not only high, but suspiciously so; and when he recalled the fact that it was followed immediately by the sale in the Collector's court, where Mr. Rolt was present and himself bid for the *taluk*, where the only bidders against the Estate were two servants of the *patnidar*, and where the price was run up to Rs. 15,100, Mr. Lea was, in the Lieutenant-Governor's opinion, justified in taking action as he did. The valuation was, beyond doubt, excessive; it cannot even now be explained without the admission that there were mistakes in the calculation; and the circumstances generally were (when brought to notice) regarded as suspicious by the Commissioner and the Board, the highest Revenue authorities, as well as by the Legal Remembrancer and the Standing Counsel, both of whom, on being referred to by the Hon'ble Mr. Hare just before the trial, expressed the opinion that they disclosed a strong *primâ facie* case, and that the prosecution should be proceeded with.

As to (*c*), Mr. Lea has again shown that he by no means failed to recognise that the statement made by Mosadi Singh should be received with the utmost caution, and that he, therefore, proceeded at once to test it in what seemed to be the best and only practical manner open to him.

As to (*d*), the position in which Mr. Lea found himself was one of extreme difficulty, and the explanation given by him and endorsed by the Commissioner—namely, that it was surmised that, if Mr. Rolt had been taken into confidence, there would have been no chance of discovering any evidence against him—is, as the learned Judge has himself in a way admitted, a reasonable one. Moreover, as has already been shown, what Mr. Lea—and also Mr. Macpherson—all along contemplated and, in fact, recommended, was a departmental enquiry, in the ordinary course of which Mr. Rolt would have been called upon to offer any explanation he had to give; and it was only through the accident or misunderstanding indicated in paragraphs 5 and 6 above that the matter was taken out of their hands and the prosecution precipitated by the express order of the Board. By the latter the view taken was, as Mr. Savage, the Member in charge at the time, has informed the Lieutenant-Governor, that the circumstances relating to the *patni* sale and the facts ascertained by Mr. Lea

were in themselves such as to make the case preeminently one for investigation in a Court of Justice and so to render it out of the question to call upon Mr. Rolt for any explanation. The Board seem from the papers to have unfortunately accepted the facts and circumstances set forth in the Commissioner's letter as having been *primâ facie* established by a departmental inquiry, whereas the Commissioner was only asking for such an inquiry. Then, when the Board referred to the Legal Remembrancer the question whether those facts and circumstances would constitute an offence, he not only answered in the affirmative, but also recommended prosecution. The order for prosecution accordingly followed; and it is evident that the Board, in issuing it, did not think of asking for an explanation, as that might have prejudiced the defence. It was thus owing to confusion that no explanation was ultimately called for; and, while it is to be regretted that Mr. Lea should not have pointed out that he had promised Mr. Rolt an opportunity of explaining, it was not unnatural for that officer to carry out the orders of the Board, merely recognising that his view of the case had not been taken by higher authority.

That Mr. Rolt was not given the opportunity for which he sought, the Lieutenant-Governor cannot but regard as unfortunate. The case against him, in so far as it depended upon the *patni* sale, could scarcely have been prejudiced thereby; and the circumstances connected with his remittance to the Alliance Bank of Simla might then have been cleared up in the manner which has only now become apparent. In other words, it appears that, had Mr. Lea given Mr. Rolt the opportunity for which the latter asked on the 18th June, the following explanation might have been forthcoming. The sum of Rs. 7,000 was admittedly paid by Mr. Rolt into the Bank on the 27th May 1903, *i.e.*, seven days after Parmeshwar Lal was said to have paid Mr. Rolt Rs. 5,000; and Mr. Rolt's remittance included the following notes:—

$\frac{OA}{3}$	66028 for Rs.	1,000.	
$\frac{OA}{3}$	77930 „ „	1,000.	
$\frac{LA}{98}$	36395 „ „	100.	
$\frac{LA}{98}$	36396 „ „	100.	
$\frac{LA}{98}$	71154 „ „	100.	
$\frac{LA}{91}$	40231 „ „	100.	
$\frac{LA}{98}$	26086 „ „	100.	
$\frac{LA}{97}$	01404 for Rs.	100.	
$\frac{LA}{92}$	31417 „ „	100.	
$\frac{LA}{98}$	46368 „ „	100.	
$\frac{LA}{97}$	20983 „ „	100.	
$\frac{LA}{95}$	97106 „ „	100.	
$\frac{OA}{3}$	39046 „ „	1,000.	
$\frac{OA}{3}$	82613 „ „	1,000.	

The first twelve of these represent Rs. 3,000, and it is said that Mr. Rolt obtained them from Muhammad Hussain in exchange for cash, consisting of Rs. 2,000 borrowed from Harakh Chand on the security of a diamond, and of Rs. 1,000 out of savings in his possession. The loan is, it appears, entered in Harakh Chand's Murshidabad account-books under date the 17th Bysack, 1960S., while Muhammad Hussain's note-register, which was not produced before the committing Magistrate, supports the above statement. The diamond in question was produced by Harakh Chand before the Committee and identified by Mr. Maclaren of Messrs. Hamilton & Co. as one which had been set by the firm for Mr. Rolt in 1896, and the setting was produced by Mr. Rolt himself and similarly identified. The remaining two notes for Rs 1,000 each are said to have been obtained by Mr. Rolt from Harakh Chand on the security of his pay, and their numbers are entered in the Babu's account-book as having been sent to Mr. Rolt on the 22nd May, together with two hundred-rupee currency notes and Rs. 300 in cash. Documentary evidence might, therefore, have been produced by Mr. Rolt at an early stage to rebut that upon which Mr. Lea was relying. But the Lieutenant-Governor must consider the case as it presented itself to Mr. Lea at the time, and not in the light of subsequent events; and, approaching it from this point of view, His Honour is bound to say that, in his opinion, Mr. Lea's conduct is not open to the censure

conveyed by the remarks recorded by the learned Judge. The circumstances, as they appeared to Mr. Lea, were suspicious; and the evidence against Mr. Rolt was to all appearance strong. An explanation might have allayed Mr. Lea's suspicions; and it should have been taken. But Mr. Lea is certainly not wholly to blame for having failed to take it.

(2) The learned Judge thinks that in putting Mr. Rolt off at the interview of the 13th June, Mr. Lea showed a want of tact, straightforwardness and candour which one would not expect from a gentleman in his position. It was open to him, as Mr. Justice Henderson observes, to refuse, if he thought fit, to give any information; but it is thought impossible to justify what are characterised as his evasion and the palpable inaccuracy of his reply to Mr. Rolt's enquiries.

These are grave remarks on the part of the learned Judge; and it is a great satisfaction to the Lieutenant-Governor to say—as he does without hesitation—that Mr. Lea's reply, coupled with the terms of the demi-official letter which he wrote to the Commissioner on the very day in question and which is reproduced in paragraph 4 of Mr. Macpherson's letter of the 9th January, 1905 (Appendix B), and the circumstances generally, seems to His Honour to be sufficient to show that they were, after all, not deserved. The conclusion arrived at by the Committee in this connection is that Mr. Rolt was in practical agreement with Mr. Lea as to the result of the interview; and, as pointed out in their report, it has been one of Mr. Rolt's grievances that, although Mr. Lea told him on this occasion that he would have an opportunity of explaining if anything required explanation, he was afterwards denied the opportunity before his suspension and prosecution. This assurance, on the face of it, implied at least that there was something which might eventually have to be explained, and the giving of it was clearly incompatible with a statement to the effect that there were no charges of any kind against Mr. Rolt. The latter, as an official of the Court of Wards, must have been well aware of the distinction between definite charges and indefinite accusations or suspicions; and the circumstances render it plain that he cannot but have understood that there were charges (in the widest sense of the expression) against him, and that Mr. Lea, in saying that there were none, intended to refer to regular charges and to intimate that such had not so far been formulated. And the circumstance that, as soon as Mr. Rolt was suspended, Mr. Lea, on the morning of the 18th June, sent him for perusal his report—a confidential one, be it noted—to the Commissioner, and that he, later on in the day, furnished him with a copy of the same for his own use and convenience, appears to be wholly inconsistent with a desire on Mr. Lea's part to treat Mr. Rolt unfairly by keeping him longer in the dark than was deemed absolutely necessary.

(3) The learned Judge draws marked attention to the circumstance that, although Mr. Rolt told Mr. Lea at the meeting of the 18th June that he had borrowed from Harakh Chand Rs. 2,500 on a *hundi* as an advance of pay, and also a further sum of Rs. 2,000 on the security of a diamond in May, just before he left for England, Mr. Lea made no enquiries into those matters.

Mr. Lea's explanation is that these assertions did not appear to him to be inconsistent with the charge that part of the large remittance made to the Alliance Bank was a loan of a smaller amount received from Parmeshwar Lal through Muhammad Hussain in the manner alleged, and, so far as appears, nothing was said by Mr. Rolt to connect Muhammad Hussain with Harakh Chand's transaction, while Muhammad Hussain's note-register supplying the connecting link was not produced till the trial before the High Court. Although, therefore, it is now to be regretted that Mr. Lea did not enquire into Mr. Rolt's statement at the time, His Honour cannot blame him for having thought that Mr. Rolt's real object was not to explain, but to make Mr. Lea show his hand and to ascertain what was known against him.

(4) Exception is taken to Mr. Lea's having held the enquiry on the 20th June with closed doors, to his having administered oaths to the persons examined by him, and to his having refused to allow a pleader to be present in the absence of Mr. Rolt himself.

Mr. Lea, while admitting that he made a mistake in thinking that he was acting as a Revenue Court and consequently entitled to put the witnesses on oath, submits that Mr. Rolt was not prejudiced thereby, and that the witnesses were, if sworn, all the more likely both to tell the truth and to adhere to it. The Lieutenant-Governor is unable to accept this explanation, and considers that the course taken by Mr. Lea in this connection was objectionable, besides being unwarranted by law, and that it cannot be defended.

(5) By opposing the transfer to the High Court and proposing that, if there were a transfer, it should be to Bhagalpur, Mr. Lea, Mr. Justice Henderson remarks, "unfortunately laid himself open to the suggestion, probably unfounded, of being an unduly zealous prosecutor."

The imputation underlying such a suggestion could only be that, had the trial been held at the head-quarters of the Division of which Mr. Macpherson was the Commissioner, the Judge and Jury might have been subjected to official influence. Having regard to the circumstance that a Jury empanelled at Bhagalpur would have been composed mainly of non-official Europeans whose independence could not possibly have been assailed, the Lieutenant-Governor thinks it unnecessary to do more than emphasise the parenthetic statement of the learned Judge by saying distinctly that there could be no foundation for any such suggestion.

(6) The learned Judge thinks that it was inconsiderate on the part of Mr. Lea to ask Mr. Rolt to answer any departmental charges while the prosecution on the criminal charge was pending.

Mr. Lea points out that an altogether erroneous impression, and one unfavourable to himself, was caused by the fact that the statement made by him was elicited by certain questions put in cross-examination, and was not a statement of all that passed between Mr. Rolt and himself. What did happen is now clear; and it will suffice to say that the mistake made in the first instance was, within four days, corrected by Mr. Lea when he informed Mr. Rolt on the 17th September that he would defer taking any explanation from him till after the conclusion of the criminal case. In justice to Mr. Lea, also, it should be added that he informed the Commissioner, in a letter dated the 12th September, that he proposed to call upon Mr. Rolt for his reply, and that Mr. Macpherson, who was on tour at the time, overlooked the point.

(7) The learned Judge points out that Mr. Lea's action in taking up Mosadi Singh's appeal from his dismissal and reinstating him two days after he had given evidence against Mr. Rolt before the committing Magistrate, was likely to prejudice the latter in the district.

Mr. Lea's explanation is that he thought it better to take this course than to keep the question of dismissal hanging undecided over Mosadi Singh's head until the latter had given evidence at the trial. His Honour has no doubt but that Mr. Lea was influenced by this consideration alone, and that he acted for the best in this connection. The Lieutenant-Governor considers that the situation was a very difficult one. If Mr. Lea had deferred hearing the appeal, he might certainly have appeared to be holding out an inducement to Mosadi Singh to speak out; whereas he really lost his hold over Mosadi Singh by deciding his appeal. If, therefore, his action was mistaken at all, it was an excusable error of judgement.

(8) The learned Judge expresses surprise at Mr. Lea's having sent for Asaf Ali and Debi Singh to ascertain from them whether they could give any information against Mr. Rolt when he knew that they were bad characters and relatives of Mosadi Singh.

Mr. Lea, in relating the circumstances at length, explains that Asaf Ali, being a Muhammadan, was not related to the Hindu treasurer; that he was not aware till subsequently that Debi Singh was a distant relative; and that, as in the case of Mosadi Singh himself, even if these informers were unreliable, that did not, to his mind, preclude the possibility of their being able to give valuable information against Mr. Rolt. His Honour thinks that these explanations are satisfactory and sufficient.

(9) The learned Judge remarks upon the fact that, although Kunja Lal had stated before Mr. Lea that it was he who had lent the money to

Parmeshwar Lal, Mr. Lea was present in Mr. Heard's Court when Kanhaya Lal was examined and swore that he personally had given the money in the absence of his brother, Kunja Lal.

Mr. Lea's explanation upon this point, namely, that there was no real inconsistency, as the plural word ("*ham*") used by Kunja Lal would indicate the firm as well as the deponent himself, appears to the Lieutenant-Governor to be a complete reply to the suggestion that he remained culpably silent while an important change was being made in the case for the prosecution.

(10) The learned Judge observes that, whereas, when Mr. Rolt tendered his resignation on the 18th June, Mr. Lea promised to stay his hand until he received further orders from the Board, Mr. Lea, according to the statement recorded by him in the High Court, received no such instructions until a considerable time afterwards, but nevertheless proceeded with the enquiry on the 20th June on an order received by the Commissioner, who had not been informed of his undertaking.

Mr. Lea's explanation is that his memory was at fault when he was in the witness-box, and it appears that he received orders from the Board actually directing a prosecution on the very day after the submission of Mr. Rolt's resignation. But the Lieutenant-Governor considers that he was to blame for having omitted to acquaint Mr. Rolt at once with the change made in the aspect of affairs by the receipt of those orders.

(11) Exception is taken to the appointment by Mr. Lea of Mr. Heard as the officer to be entrusted with the case against Mr. Rolt, Mr. Heard having, to Mr. Lea's knowledge, applied for the Managership in succession to Mr. Rolt.

Mr. Lea has shown that Mr. Heard was the only Magistrate in the district besides himself competent to deal with the charge against Mr. Rolt, and that Mr. Heard had by that time ceased to be an applicant for the vacant post.

14. In respect of Mr. Heard, there appear to be three matters in regard to which his action has been specially animadverted upon by Mr. Justice Henderson. These are—(*a*) that he was a candidate for Mr. Rolt's appointment and visited the Manager's house in this connection; (*b*) that he showed bias by issuing a warrant for Mr. Rolt's arrest, although Mr. Lea had sent him a telegram indicating that no such coercive process would be required; and (*c*) that he needlessly insulted Mr. Rolt by making him occupy the dock. On all of these points Mr. Heard's explanations have been obtained, and they are here reproduced :—

The committing Magistrate, Mr. H. H. Heard.

"(*a*) Knowing that Mr. Rolt was already under suspension and that my immediate predecessor in the Subdivisional Officership, Maulvi Shamsuzzoha, was Acting Manager of Khagra, the idea occurred to me to apply for that Managership because—(1) I found the work at Kishanganj very crushing, having indeed had to submit an official representation that another first-class Magistrate was needed to cope with the crime; (2) the Manager's salary was Rs. 600, or Rs. 100 more than my own; (3) M. Shamsuzzoha, who knew both the appointments, assured me that Khagra was much the easier. I, therefore, wrote a *private* letter to the Hon'ble Mr. Savage, who replied at once on 22nd June 1904.* I answered it by pointing out that, under the rules, the Court of Wards' estate could bear the 'contribution' cost (which in my case would have been Rs. 120), in which event of course Khagra would really have had to pay Rs. 600+Rs. 120 for my services. Mr. Savage's second reply is his letter of 26th June, 1904.† I saw at once that there was no likelihood of the point being conceded, so replied to him that as *my* paying the 'contribution' would make my net salary Rs. 480, or less than my pay as Subdivisional Officer, I would give up all thought of the place. I had even heard that the pay of Mr. Rolt's successor would be Rs. 500 only. I had also meantime communicated with my old friend, Mr. J. Monro, C.S., of Ranaghat, whose judgement I always greatly value; and he had counselled me that Khagra would be too much of a 'siding.' The result thus is that, before Mr. Rolt came to be on trial in my Court from 20th July, 1904, I had definitely abandoned all idea of the Khagra Managership.

---

* This letter runs thus:—
"I imagine you would have a good chance of getting Rolt's place if it will really suit you; but will it? Out of the Rs. 600 you would have to pay the contribution for leave and pension, and it looks as if this would swallow up the whole of the extra hundred.
"Think it over and write again."

† "This letter runs as follows:—
'I am doubtful whether Khagra can be fairly made to pay more than the Rs. 600 for a Manager; but will consider the point when the Collector's recommendation comes up. I am starting for Calcutta on 2nd, and so will probably pass you in the night on your way up here. I can quite understand how heavy your subdivision must be!'"

"Thinking it highly possible that I might eventually have to try Mr. Rolt, I carefully avoided going to his house and even refrained from returning his social call upon me (about which he personally complained to me one day in my office, but I pleaded stress of work in palliation). After his suspension and when he was no longer in Kishanganj, and when the Officiating Manager was in residence, I drove over one evening to see the Khagra plant-house, about which I had heard much, Mr. Rolt being a well-known and skilful gardener. I found it artistic indeed; and I suggested to Maulvi Shamsuzzoha, who was showing me round, that I should like to drive back and fetch my wife that she too might see it. He acceded at once; so I drove back and brought my wife in my dog-cart. After the Maulvi had shown us the plant-house and the grounds generally, he courteously enquired if we would like to see the residence-house too, remarking that there was fine furniture by Lazarus. We agreed, and he showed us such of the rooms as were open. I asked to see the drawing-room, the best furniture being there, but the room proved to be locked up, as also certain other rooms, and Mr. Rolt's '*chaprasi*' told us that the *saheb* had the keys with him in Calcutta. That ended the matter, and we came away. But the facts of this very simple little incident have been grievously distorted in a certain affidavit Mr. Rolt handed in to the Hon'ble High Court, wherein he charges me with having attempted, with my wife, to break into his house 'with felonious intent,' during his absence. The thing was in broad daylight, many folk following us about the grounds and house as we went to and fro, some of Mr. Rolt's own servants having been among those following. The Hon'ble High Court did not call on me to answer the 'intended felony.

"(*b*) Writing from sheer memory of Mr. Lea's letter of last July, the Collector asked for prosecution of Mr. Rolt under sections 161, 162, 182, 408, 409 and 418, Indian Penal Code. For the last three sections warrants are ordinarily to issue in the first instance, non-bailable for sections 408 and 409 (*cf.* Schedule II, Criminal Procedure Code, 1898). The charge being in respect of at least Rs. 4,000, I required bail in double that sum. It will be seen that the graver sections were not those in which a summons would ordinarily issue.

"Remains the question as to why I issued a warrant in face of Mr. Lea's telegram of 11th July, 1904 to the effect that Mr Rolt was then at Purnea, and would himself come to me at Kishanganj next day. I write purely from memory, the record not being with me. But I think I am correct in saying that that telegram did not reach me till *after* the warrant against Mr. Rolt had already left my camp (a place called 'Iluabari,' 21 or 22 miles out from Kishanganj), and I believe it was even the *day after*. The record itself can confirm or refute this, as the telegram should be still filed with it.

"(*c*) I had no sort of desire to put an intentional insult or indignity upon Mr. Rolt; and, until I read in the newspaper accounts of the Collector's deposition in the Hon'ble High Court about Mr. Lea's disapproval, I had never even heard of it. In the Kishanganj Court the witness-box is to the Magistrate's left-hand side, and an exactly corresponding small dock is to his right (in my personal opinion too close to the trying officer). The idea in my own mind was that, while I would be bending over my writing, Mr. Rolt could from the small dock very well intimidate over my head, by signs and looks, the witness on the other side of me and opposite him. This fact, coupled with the further one that the larger dock was as a matter of fact but a yard or two from the pleaders' table as in my time, while the small dock would be seven or eight yards therefrom (the exact reverse was alleged in the Calcutta trial), made me insist on Mr. Rolt occupying the larger dock.

"It is to be remembered, I think, that the Crown witnesses could with difficulty be got to speak at all; and the reason, as represented to me, was that once before, when Mr. J. H. Bernard was Collector of Purnea some years ago, a similar enquiry had been started against Mr. Rolt, with the result that he had got off and his accusers were eventually imprisoned. As a mere matter of fact, also, I frequently used that larger dock at Kishanganj for even single prisoners, because there are desperate characters there, and I did not rely much on the thoroughness of search of the various prisoners by the Court Police before bringing in the accused persons. In Mr. Rolt's instance my reasons were as given above."

Mr. Heard thus shows that he was not a candidate for Mr. Rolt's appointment, and he gives a completely satisfactory explanation of his own and his wife's visit to the house which Mr. Rolt had occupied. As regards the warrant, the Lieutenant-Governor finds that it was issued after the receipt of Mr. Lea's telegram; and it is now quite clear that this had better not have been done. As to the "dock incident," the special report upon the subject which was called for from the Committee, is annexed (Appendix H), and the Lieutenant-Governor concurs in the view there expressed that the pain of Mr. Rolt's situation was needlessly aggravated by his being placed in the far dock. On the whole, and although it is difficult to censure Mr. Heard for any one of the specific acts done by him, and still more difficult, as it seems to His Honour, to attempt to lay down any rule as to the payment of special consideration to persons, however respectable, who have the misfortune to be accused of grave offences, Sir Andrew Fraser considers that Mr. Heard's treatment of Mr. Rolt was unnecessarily harsh and inconsiderate, and that his conduct

indicated, as the learned Judge observes, that his feelings towards the accused were hardly of a judicial character.

The Officiating Manager, Maulvi Shamsuzzoha.

15. As to Maulvi Shamsuzzoha, the Minute enters into many details and affects his conduct throughout the proceedings. A full explanation has, therefore, been called for from this officer; and it is annexed as Appendix D. Apart from the reference to the Official Secrets Act, which was both inappropriate and indiscreet, the Lieutenant-Governor is unable to find that anything in his conduct calls for censure.

The Board of Revenue.

16. It has been shown that the Board of Revenue were responsible for the actual prosecution of Mr. Rolt. The circumstances connected with this matter have already been described in paragraph 6 of this Resolution, and the reason for the Board's premature action has been stated in paragraph 13 (1) (*d*). There is another point in connection with the proceedings of the Board on which the learned Judge animadverts, viz., the request made to the Manager of the Alliance Bank of Simla to stop Mr. Rolt from drawing on his account. It appears that the Board consulted the Legal Remembrancer, who advised them that Mr. Rolt's balance in the Bank could not be attached with legal effect without an order of Court passed in a pending suit, and that all that could be done was to request the Bank, in view of the charges pending against Mr. Rolt, not to pay him the money standing to his credit. Upon this suggestion the Board acted, and their object in doing so was to secure the Khagra estate against loss in the event of Mr. Rolt's being found guilty—not to prevent his obtaining funds wherewith to pay for his defence.

VI.—Findings.

17. Briefly, to sum up, the result of very careful consideration of the case is that the Lieutenant-Governor holds that the conduct of the Commissioner, Mr. Macpherson, is without reproach, and finds no ground for censuring Maulvi Shamsuzzoha except on a comparatively unimportant point. As regards Mr. Lea, His Honour is of opinion that his motives were throughout honourable, but that he erred in that—

(*a*) he ought at once to have informed Mr. Rolt of the receipt of the orders of the 19th June directing his prosecution;

(*b*) he ought to have pointed out to the Commissioner that the unexpected orders of the Board regarding prosecution prevented him from fulfilling his promise to Mr. Rolt that he would have an opportunity to explain the circumstances appearing against him;

(*c*) he ought not to have administered oaths to the persons examined by him in the course of the preliminary enquiry held at Kishanganj on the 20th June; and,

(*d*) even if every allowance be made for his obvious anxiety to refrain from interfering in judicial proceedings, he might well have intervened in the interests of Mr. Rolt and prevented the harsh treatment to which he was subjected during the magisterial enquiry prior to commitment.

Mr. Lea is an officer who has always borne a reputation for careful and patient work, and for a conscientious desire to do right. In this case he endeavoured to do his duty to the wards under his charge, although it was undoubtedly a painful and disagreeable one. It is, therefore, greatly to be regretted that he should have contributed in any degree to a result so deplorable as the subjection of Mr. Rolt to prosecution for an offence of which he was eventually found to be innocent.

There remains Mr. Heard, and regarding him the Lieutenant-Governor has nothing to add to the remarks already recorded in paragraph 14 above. He undoubtedly displayed a prejudiced and unjudicial mind in regard to Mr. Rolt. He is an officer who has done good service; and the Lieutenant-Governor regrets that he should have exposed himself to severe censure in this instance. His attitude, however, was not due to the unworthy motive attributed

to him by Mr. Rolt and accepted by the learned Judge under a misapprehension of the facts.

VII.—Further proceedings on behalf of Mr. Rolt.

18. In conclusion, the Lieutenant-Governor desires distinctly to emphasise the fact that in this Resolution he is not dealing with the conduct and character of Mr. Rolt. He adheres to his acceptance of the result of the trial before the High Court and of the inquiry of the Committee regarding the other charges, of the acquittal of Mr. Rolt, and of his declared fitness for further employment. Here, however, His Honour is dealing with the case as it stood before the trial in the High Court, with the action of the officers concerned in prosecuting Mr. Rolt, and with their conduct during the preliminary stages. In these circumstances he has endeavoured to ascertain the motives which they had for their conduct, the manner in which the case originally presented itself to them, the justification or excuse which they may then have had for the action they took, and the extent to which they are now deserving of censure. It remains only to say that His Honour will be prepared to consider any application made by Mr. Rolt for the prosecution of those whom he accuses of having conspired and given false evidence against him, and to give him such assistance in proceeding against them as, after consultation with the Advocate-General, may seem to be expedient.

ORDER.—Ordered that copies of this Resolution, with the Appendices thereto, be forwarded, for information, to the Government of India in the Home Department; to the Hon'ble Mr. Justice Henderson; to the Registrar, Original Side, High Court of Judicature at Fort William; and to the officers concerned.

Ordered, also, that a copy of this Resolution, with Appendix A only, be published in the *Calcutta Gazette*.

By order of the Lieutenant-Governor of Bengal,

H. W. C. CARNDUFF,

Offg. Secy. to the Govt. of Bengal.

APPENDIX A.

Minute on the trial of MR. A. C. ROLT.

I DESIRE to bring to the notice of the Government of Bengal certain matters in connection with the trial of A. C. Rolt in the High Court before me and a special jury.

Mr. Rolt, who was Manager of the Khagra Estate under the Court of Wards, was charged with taking a bribe of Rs. 4,000 (by one witness it was at one time stated to be Rs. 5,000) for the purpose of inducing the Collector, Mr. Lea, to sanction the purchase at a sale for arrears of rent of a patni mahal named Moheshkhare, held under the estate, at a price very largely exceeding its real value. The suggestion was that Mr. Lea, being new to the district and ignorant of the actual value of patnis in the district, Mr. Rolt took advantage of his ignorance, and obtained his sanction to bid on behalf of the estate up to Rs. 15,500, the actual value being about Rs. 8,000, his object being to benefit the patnidar who, it was said, a few days after the sale gave the alleged bribe in accordance with an arrangement which had been come to before between them.

The sale of the patni took place on the 15th May 1903, and the patni was knocked down to a bid of Rs. 15,100 made on behalf of the Khagra Estate.

In recommending the purchase Mr. Rolt submitted with his report a calculation which, it should be stated, was not made by himself, but apparently submitted by his office, purporting to be based on Table V, Court of Wards Manual, page 115, and he made it on the basis of 18 years' purchase in accordance with this table It is said, however, he was wrong not only in working upon this basis, but in over-estimating the gross rental and in his mode of calculating the amount of collection charges. It was not established that the gross collections were over-estimated, or, if so, to what extent, but there seems to be some ground for supposing that a mistake was made in arriving at the collection charges. Having regard to the fact that the calculation appears not to have been made by himself, it may be that this was the mistake of the person who made it, and not of Mr. Rolt, who for aught that appears may have passed it, just as Mr. Lea and the Commissioner did. Mr. Lea stated that he subsequently made general enquiries as to the ordinary value of patnis in the district, and he found that it depended very much upon the position of the patni. He ascertained that the value ranged between 8 and 12 years' purchase. He was unable to specify any particular mahal as having been sold or valued at any particular number of years' purchase.

There was some evidence that the patni in question was exceptionally well situated. As regards fixing the net income of the patni Mr. Lea stated that he took his figures from the settlement papers, which admittedly showed an income less than the actual income. Taking the evidence of value as it was placed before the Court, it would, apart from any other circumstances in the case, be extremely difficult on the evidence to say that the report submitted by Mr. Rolt when he asked for sanction to purchase the mahal showed any intentional over-valuation.

In this connection, however, there is another piece of evidence put forward to show that Mr. Rolt was not, and could not have been acting honestly in the matter of the sale. It is said the only other bidders were two persons known to him to be the servants of the patnidar, and that it was the duty of Mr. Rolt to have informed the Collector that their object was merely to run up the price without any intention of becoming the purchasers. It may be taken, I think, that they had no intention to become the purchasers, but the evidence is that they were instructed by their master to bid up to Rs. 4,000 or Rs. 5,000 beyond what he had himself paid as *nazerana* when he acquired the patni. It may be reprehensible, but it is well known that in cases of this kind patnidars do employ persons to bid for them with a view to prevent a "knock out" sale. So far as appears from the report of Mr. Rolt and from what took place at the sale the value put upon the patni may, owing to the mistake mentioned, if not for the reasons alleged by the prosecution, have been somewhat high, and it may be that Mr. Rolt ought to have mentioned to the Collector that the two bidders were servants of the patnidars. From these circumstances alone there was little, if anything, to excite suspicion. It should be mentioned that the sanction was confirmed by the Commissioner, who also in due course confirmed the sale.

Mr. Rolt left for England in the beginning of June 1903. In July 1903 the Assistant Settlement Officer, Mr. Byrne, appears to have given some information to Mr. Lea, but the latter made no report or record with reference to this information, but he said he asked Mr Byrne and certain other persons, amongst them Mr. Downing and Maulvi Shamsul Zoha, to assist him in making enquiries and to try and get definite evidence, but he said these persons were unable to get any such evidence against Mr. Rolt. It was not until November 1903 that he made any report in the matter, but between that time and June 1904, he made several reports, both written and verbal, presumably to the Commissioner. Mr. Rolt returned from England in November 1903.

In order to appreciate Mr. Rolt's position at this time with regard to the estate of which he was Manager, it is necessary to consider for one moment the evidence as to the intrigues and difficulties with which he had had to contend against previously. What his position was can be learned from Mr. Lea's own statements before me. That gentleman stated that in June 1904 he was aware that Mr. Rolt had many enemies connected with

the estate, and chiefly amongst them were the Begum, the mother of the minors, and Sujait Ali Khan. He had been told by Mr. Rolt that Asaf Ali Khan was his enemy. At first he was not prepared to say that Maulvi Shamsul Zoha was very hostile, but he went on to admit that he had tried a case in which he had used very strong language about Mr. Rolt's evidence, which evidence he had entirely discredited. That the matter having come before him (Mr. Lea) in revision he had himself found that the observations made by Shamsul Zoha were not warranted by the evidence, and he considered the evidence was true. He knew that in the estate intrigues had been going on for years fomented by Sujait Ali; that Sujait Ali, who had been the tutor of the minors and their joint guardian with their mother, had about 1899 married the mother; that the marriage had been brought to the notice of the Board of Revenue by Mr. Rolt, with the result that Sujait Ali was dismissed from his post as tutor and guardian, and that it was from that time all the intrigues against Mr. Rolt had commenced; that he was aware that Sujait Ali, who was living with the Begum in Calcutta, had sent an emissary (he was not aware that he had sent more) to Khagra to create trouble and to get up charges against Mr. Rolt; that it was common knowledge in the district that a man claiming to have contracted a previous marriage with the Begum had prosecuted Sujait Ali in Calcutta for bigamy, and that Mr. Rolt had gone down to Calcutta to give evidence for the prosecution, though he (Mr. Lea) was not aware whether he actually gave evidence. Mr. Lea further stated that Sujait Ali, since his marriage, had persistently endeavoured to get Mr. Rolt out of the management, and that the Begum herself had associated herself with him in their endeavours.

In this connection it was proved that in 1901 the Begum presented a petition to the Board of Revenue making a large number of charges of very serious misconduct against Mr. Rolt, in addition to a charge of extravagance or living beyond his income, and asking for the removal of Mr. Rolt. These charges were apparently very carefully enquired into and considered [*vide* letter, dated 12th April 1901, from the Commissioner to the Board of Revenue (Exhibit No. 16), Resolution of the 3rd May 1901 (Exhibit No. 15)], and Mr. Rolt was honourably acquitted and nothing but praise said of him by the officials concerned, as will appear from a number of letters, reports and other documents (both admitted copies and originals) (*vide* Exhibits Nos. 14, 14*a*, 15, 16, 17, 17*a* to 18*a*, 6, 19, 20 and 22). In November 1903 the Begum presented another petition (Exhibit No. 13) to the Board of Revenue protesting against Mr. Rolt being allowed to return after his leave to Khagra. Mr. Lea also stated that he was aware from the records in his confident[illegible] that certain officers considered that Mr. Rolt had worked very well; that cha[illegible] a character similar to those in the present case had been made against him before, that the estate had been worked for years against the machinations of a number of Mr. Rolt's enemies; that Mr. Rolt's enemies had been trying to get him out of the Estate; that they had made charges of every possible kind of infamy against him in connection with his management, and that the charges had been investigated, but, without seeing the reports, he was not prepared to say that the then Commissioner and Board of Revenue had found that one and all of these charges were absolutely false, but on being pressed he admitted that Mr. Rolt had been acquitted of the charges brought by the Commissioner and Board of Revenue.

Various letters and resolutions were put in showing that Mr. Rolt as manager was very highly thought of by his superior officers.

Mr. Lea was aware that in 1901, Mr. Rolt had been actually charged by Sujait Ali with having enticed away his wife, the Begum, but he was not aware that this charge had been enquired into and found to be false by the Commissioner.

From the evidence of Mr. Lea and from the documents which were put in it is clear that for a very considerable time before June 1903, when Mr. Rolt left for England, he had been working among enemies who had not scrupled to charge him with gross misconduct with a view to getting him dismissed, and of this Mr. Lea was well aware before he began taking active steps against Mr. Rolt.

Mr. Lea's suspicions were first aroused in July or August 1903, when he received information of some sort from Mr. Byrne; but although he asked various persons, including Mr. Downing, who was the manager in respect of another share in the same estate, to try and get definite evidence against him, he says they were unable to get any, which is a very significant fact, and it may be taken that until (as will hereafter appear) he got certain information from Masuddi Singh, the treasurer of the Khagra Estate, whom Mr. Rolt had dismissed, he had got no definite information of any kind upon which action could be taken. Mr. Rolt returned in November 1903 and Mr. Lea continued to be on friendly terms with him, but upon terms, as he explained, which were never completely friendly. He invited him to his camp at Purnea in January 1904. In that month, however, he said he refused to put up with him at Khagra, but on being further cross-examined he admitted that during his visit on that occasion he twice breakfasted with him and he may have also dined with him, and he was not prepared to swear that Mr. Rolt had not been invited to dine with him.

In April a question arose between Mr. Rolt and his treasurer, Masuddi Singh, relative to the loss of a 500-rupee note. Correspondence ensued between Mr. Lea and Mr. Rolt between the 1st and 6th May, Mr. Rolt charging the treasurer with grave dereliction of duty, and suggesting that he should be prosecuted (*vide* Exhibits Nos. 1, 2, 2*a*, 2*b*, 3, 4, 5, 6 and 8).

Masuddi Singh was, under orders from Mr. Lea, suspended on the 6th May, and finally dismissed on the 18th May for the reasons given in Mr. Rolt's letter of the 23rd May (Exhibit No. 10), in which was enclosed a petition (Exhibit No. 10*a*) of Masuddi, dated the 16th May, and his explanation (Exhibit No. 10*c*) endorsed as having been received on the 19th May, the day after the dismissal.

In the correspondence referred to Masuddi Singh was stated to have absented himself on false excuses, and under orders from Mr. Lea he was ordered to be bound down in two sureties to attend before Mr. Rolt.

Among other reasons for the dismissal of Masuddi given in the letter of the 23rd May was "it was clear that the late treasurer had embezzled the amounts" mentioned in the letter.

In his petition Masuddi made no charges against Mr. Rolt relative to the alleged bribe in connection with the sale of the patni. On the 19th May he filed an appeal to Mr. Lea against the order of dismissal. On the 20th May he was said to have been hanging about the Collector's Court. Mr. Lea therefore sent for him to go to his private house, as he wished, he said, to ask him if he could give him any information about the charges he had heard of against Mr. Rolt, that is from Mr. Byrne, Mr. Downing and others, which in fact were mere rumours. At that time Mr. Lea was aware that Masuddi Singh had been dismissed. On being asked if that was the first time Masuddi Singh had brought charges against Mr. Rolt, Mr. Lea stated that he did not bring any charges, but that he (Mr. Lea) had questioned him.

Mr. Lea admitted that up to this time no one had told him that Masuddi could give him information about the alleged bribery.

On being asked what the charges were which he had heard against Mr. Rolt, he said one was the present charge and the other was with reference to another patni sale which had taken place a few days previously, and on being further pressed he stated that no one had made a charge, but that Mr. Byrne had informed him about the transaction with Parmeshur Lal (*i.e.*, the alleged bribery). A Mr. Tucker also in September or October 1903 had spoken to him on the subject; also Mr. Downing and Maulvi Shamsul Zoha and the former Sub-divisional Officer, Monmohun Lall, in January 1904. What he was told he said was told him as a matter of general rumour; the rumour being that Mr. Rolt had made Rs. 5,000 (not Rs. 4,000) out of the sale. The only person who gave him any particulars was Maulvi Shamsul Zoha, and that was some time in April 1904, just a short time before the interview with Masuddi Singh, and the only particulars were that the money has been borrowed from Kunjo Lall Kanhye Lall.

It is curious as showing how vague was the rumour of which he was told that until the 21st May Mr. Lea never made any enquiries as to the value of the patni. It never occurred to him, he said, during all that time that the patni had been sold at an excessive value.

Mr. Lea's account of the interview with Masuddi Singh is shortly as follows:—

So far as he remembered, the first thing he asked him was to state to him what was the real cause why he and Mr. Rolt had fallen out. He was induced to put that question because he was under the impression that there was something at the bottom which had not come out, that is to say, he did not, he said, believe that Mr. Rolt in his report was speaking the truth. It was not exactly in any particular; but previously when he had gone to Kissenganj, the Estate Pleader, Abdul Rohim, had come to him and tendered his resignation, and said he had been badly used by Mr. Rolt; then a telegram came from Darjeeling to him in which he withdrew a previous letter which he had written to the Pleader and expressed himself satisfied with his work. Asked what on earth that had to do with his not believing the story of Mr. Rolt against Masuddi, all Mr. Lea could say was that that incident caused him to distrust Mr. Rolt—that incident along with others, one of which was connected with a visit of Mr. Rolt to Benares in January to meet some globe-trotting friends (what the Benares incident was was not elicited, but he said that he had got some information with regard to that visit from certain gentlemen whom he mentioned).

There was another matter he afterwards added—a criminal case between Mr. Rolt and certain tenants in January 1904—the case in which he believed Mr. Rolt's evidence after Maulvi Shamsul Zoha had disbelieved him. He said he held upon the evidence that Mr. Rolt was to be believed, but he was suspicious that the real facts had not come out.

After stating that there was no reason for doubting Mr. Rolt he went on to say that he had heard from Mr. Downing that there was a dispute between Mr. Rolt and his office over the proceeds of the Khagra *mêla*, but he admitted that as to this Mr. Downing was merely reflecting bazar gossip.

In asking Masuddi the question what was the real cause of his having fallen out, Mr. Lea stated that he had in his mind that Mr. Rolt in dismissing Masuddi and proposing that he should be prosecuted was endeavouring to cover a dispute about the *mêla*.

Masuddi's answer was that the real cause had reference to the disposal of the estate of a man named Gopi Singh who had recently died at Khagra. I may say in passing that although Mr. Rolt afterwards invited Mr. Lea to send for the heirs of Gopi Singh to see if there was any truth in the suggestion, he did not do so, but deputed Inspector Nasiboollah Khan to ascertain if they would say anything, and on receiving his report he took no further action. As it appears that Nasiboollah Khan was not on good terms with Mr. Rolt, this is significant.

To resume Mr. Lea's evidence as to the interview with Masuddi:—He then asked him if he could give any information about the Moheshkhare patni taluq. He did not record

the statement, as he was hurried because he feared that if Masuddi stayed any time Mr. Rolt might get to know of his having had Masuddi brought to his private house, and his suspicious might be aroused. The suspicious part of it, he said, was that the visit was to his private house. He made notes in pencil, however, and subsequently copied them out in ink. The notes as recorded are Exhibit No. 12, which are as follows :—

"MOSADI SINGH, Treasurer of Manager's office, on suspension.

The reason why Mr. Rolt has turned me out is because I and two other servants of the estate held in our hands about Rs. 2,000, the property of a deceased tenant, Gopi. Mr. Rolt told me to make over half to the heirs, and to keep half for him. I made over the whole amount to the heirs, and so he has turned against me. I can give evidence of Rs. 80,000 which Mr. Rolt has taken out of the Estate.

Patni sale of Parmeshur Lal's patni.—Last year Mr. Rolt bought this patni for the estate for Rs. 15,000. It is worth Rs. 8,000 or Rs. 9,000. It was arranged that Parmeshur was to give Rs. 5,000 to Mr. Rolt. Babu Lal and Genda Dal, two servants of the patnidars, bid the patni up to Rs. 15,000.

Parmeshur Lal borrowed Rs. 4,000 on a *hundi* from Kunjo Lal on the 19th or 20th May 1903, and paid over this and Rs. 1.000 of his own to Mr. Rolt. On that same date Mr. Rolt sent Rs. 5,000 through Nijabut Hussain Sharistadar, and Ramsukul Jemadar to Mohamed Hossain, who exchanged the cash for five notes of Rs. 1,000 each.

Mohamed Hossain got these notes two or three days before from Golam Rasul of Calcutta.

These five notes Mr. Rolt sent down either to the Bank of Bengal or to the Alliance Bank of Simla.

The 21st May 1904. (Sd.) J. H. LEA."

It never occurred to him, he said, that the statement might be false or that it was strange that Masuddi should have known the occasion and date when Parmeshur had borrowed the money, but it did strike him that he was prepared to give him any information against Mr. Rolt that he could.

Considering that Masuddi was a servant dismissed by Mr. Rolt on charges involving serious dishonesty, and having regard to Mr. Lea's knowledge of the previous intrigues against Mr. Rolt and the opinions of previous Collectors, Commissioners and Members of the Board as to his successful management in spite of all he had to contend against, one would have thought he would have sent for Mr. Rolt and asked for an explanation. He did not however do so. He sent for Babu Nund Kissore Lal, Income-Tax Deputy Collector, and instructed him to make use of his position as Income-Tax Collector, and obtain possession of the books of Parmeshur Lal, Kunjo Lal Kanhye Lal, and Mohamed Hussain, pretending (that is the only appropriate expression) that the books were wanted for purposes connected with the assessment of their income-tax. The Deputy Collector, it need hardly be said, got possession of the books, and he made them over to Mr. Lea on the 24th or 25th of May. To my mind it was most reprehensible on the part of Mr. Lea to make use of the Income-Tax Deputy Collector as a detective, and I am astonished that the Deputy Collector should have lent himself to a proceeding so improper.

The Income-Tax Deputy Collector was also sent to Calcutta, not as an Income-Tax Collector, but as agent of the Collector, with a letter to the Manager of the Alliance Bank, where Mr. Rolt had an account, and he obtained information which tended to confirm Mr. Lea's suspicions against Mr. Rolt. Not content with having taken the statement of the dismissed treasurer, Mr. Lea, on the 3rd June 1904, took the statements of Asaf Ali Khan and Debi Singh, the name of the latter being suggested to him by the treasurer. Although he was aware, as he admits, that Asaf Ali was a notoriously bad character and a relative of the treasurer, he sent for him "for the purpose of ascertaining whether he could give me any information against Mr. Rolt." He was not then aware that Debi Singh was also a man of bad character. It did not however occur to him (as it would to any ordinary man) to send for Parmeshur Lal or Kunjo Lal to ask them as to the entries in their books. He was asked why he did not send for and examine these men, and his answer was that he "never thought that they would say anything on the subject."

In the meantime Mr. Rolt was ignorant—he certainly had not been informed—that his dismissed treasurer had made a statement against him. On the 6th June he wrote a letter (Exhibit No. 23) to Mr. Lea complaining that the treasurer had given out that he had been to Calcutta and seen Sujat Ali ; and some men of Sujait Ali, he was informed, had been to Khagra, and that correspondence would show how on other occasions dismissed servants of the estate had gone to Sujait Ali, as they knew he (Sujait Ali) had very bad feelings towards them. On receiving that letter Mr. Lea made no enquiries whether Sujait Ali or his emissaries were about Kissenganj or with regard to any of the other matters stated in the letter.

On the 9th June Mr. Rolt again wrote another letter (Exhibit No. 25) to Mr. Lea. In that he informed Mr. Lea that the treasurer and party still continued to converse with bazar people, bankers and others of what they will do, and that Sujait Ali will help them. "I believe," he said, "from the way that the treasurer talks Sujait Ali has sent some men to

help him, as I hear a report that such a man came and stayed with Debi Singh and the treasurer, and that they all went to the house of one Parmeshur Lal, late patnidar of Moheshkhare, and certain tenants of this taluq were sent for and instructed not to pay rent and if possible to go and complain against the tahsildar to you."

These letters refer to matters which seem to show a course of conduct on the part of Masuddi Singh which might very reasonably have suggested the advisability of making enquiries as to what Sujait Ali or his people were doing.

On the 11th June Mr. Rolt sent a telegram (Exhibit No. 26) to Mr. Lea, stating: "Just heard of plot against me by Sujait Ali, Asaf Ali Khan, and treasurer. Coming immediately. Have confidence on me. Can disprove everything. Please retain all books made over by parties concerned in the plot."

On the 12th June, Mr. Rolt wrote asking for an interview with Mr. Lea, and an appointment was made for the following morning at 7-15.

At this time all the statements of Masuddi charging Mr. Rolt with having taken a bribe and all other information which had been collected by Mr. Lea from Messrs. Byrne, Downing, Shamsul Zoha, Nund Kissore and others had been reported (on the 11th June) by Mr. Lea to the Board of Revenue.

As to the interview which took place on the 13th June, Mr. Lea's evidence is as follows:—Mr. Rolt asked if there were any charges against him. The tenor of his reply was that no charge had yet been framed. He was not able to remember whether he used the word "framed," but he thought he used the word "made." He knew that Mr. Rolt wished to know what was against him, and he wished to know everything. Mr. Rolt stated that he would be prepared to give an explanation of any matter that might be charged against him. Mr. Lea replied that at present no charges had been made against him, but when charges were made his explanation would be called for, and he told him that it was unnecessary for him to offer any explanation then, as there were no charges against him. Asked by Counsel whether he thought this was quite an accurate statement by him, he replied—Yes; charges in his mind meant formal framed charges. Asked whether he thought that Mr. Rolt was asking about such charges, he replied that he could not say, but he did not believe he did.

In this connection I feel constrained to remark that in thus putting Mr. Rolt off, Mr. Lea showed a want of that straightforwardness and candour which one would not expect from a gentleman in his position. It was open to him, if he thought fit, to refuse to give any information. but it is impossible to justify his evasion and the palpable inaccuracy of his reply to Mr. Rolt's inquiries.

In his evidence as to what further happened at the interview he said that, so far as he could recollect, Mr. Rolt told him that he had heard that the treasurer had been putting the tenants on the estate up to laying charges against himself of having tried to get bribes from them; that he had heard that certain tenants had been brought into Purnea to a pleader there, whom he named, to draw up the charges, and that the petitions containing these charges were to be presented to him (Mr. Lea); that he had also heard that the treasurer had gone to Purnea and taken away the petitions from the pleader, and Mr. Rolt asked him (Mr. Lea) to send for the pleader and enquire if these facts were true. Mr. Lea said that afterwards he did send for the pleader and he ascertained that the persons mentioned by Mr. Rolt had come to him, and he had drawn up petitions charging Mr. Rolt with having attempted to take bribe from them The petitions, however, were never presented, and Mr. Lea said he had never seen them nor made any further enquiry with regard to them.

Continuing his evidence as to the interview Mr. Lea said he did not remember whether Mr. Rolt had given him information with regard to what he had heard the dismissed treasurer was doing and the persons he was having communications with, but he said Mr. Rolt did produce the (currency) note register of the Khagra office, which he said had been kept by Masuddi Singh, and he pointed out what he said were false entries by Masuddi Singh with regard to notes supposed to have been received and disbursed, which false entries he stated were in the handwriting of the treasurer himself. He also brought certain other books from the Khagra office and a number of papers and documents, treasury challans, etc. He pointed out entries in the book in the handwriting of Masuddi which he said could be proved by these other documents to be false.

He showed him, he said, one isolated entry in the book, but he did not, so far as he could recollect, show him a continuous series of false entries in the handwriting of Masuddi in connection with currency notes received and disbursed. He showed him some half a dozen such entries spread over several years, as far as he could recollect. In reply to the question by Counsel whether it was not a fact that Mr. Rolt had pointed out over 50 entries in the note-book and the other documents, he said that Mr. Rolt said he was prepared to show him over 50 entries. He showed him instances of entries in the note register showing a large number of notes as having been remitted from the office to the Begum, whereas he said the treasury challans and other documents in the office would show that a much smaller number had been sent to her. He told him that it was perfectly clear that Masuddi had been acting in the interest of Sujait Ali and the Begum in what he was doing, so as to be able to bring charges against the manager the moment the estate came into their hands, which it would about the beginning of 1906, and that there were papers in the office records which would prove that the entries in the note register were false.

"What did you think of that?" asked Counsel, and Mr. Lea's reply was that he certainly did not trust the treasurer at all at any time. He thought that in his report he had said that the evidence of the treasurer was open to suspicion, but he did not tell his official superior (the Commissioner) what Mr. Rolt had told him as to what he was prepared to prove; for his report had already gone up and he sent no other report.

He said further that Mr. Rolt told him that he had heard it had been given out by Masuddi in the bazar that books had been placed before him (Mr. Lea) and that his bank account had been inspected, and he asked in what connection all this had been done and that he (Mr. Lea) declined to tell him. On one occasion—it may have been on that occasion—he told him that he had recently inherited money from his father and grandfather, that he had been speculating in jute shares in Calcutta with that money. It was clear, Mr. Lea said, that Mr. Rolt then thought that the point of examining his bank account was as to his means and monetary transactions, and he appeared to be endeavouring to explain how he had large sums in his bank account. He (Mr. Rolt) told him of specific sums which he had remitted comparatively recently. Mr. Lea was unable to say whether it was on that occasion that he said he had heard that Mr. Byrne had been saying things against him. On another subsequent occasion at Kissenganj, Mr. Rolt had told him that he had heard that Mr. Byrne had been making certain allegations against him, and he showed him some papers in connection with a case which had been before Mr. Byrne in which that gentleman had evinced great ill-feeling towards him. Mr. Rolt further stated that Asaf Ali was in the plot, and he showed a record of Mr. Faulder, a previous Collector, regarding Asaf Ali. This record, Mr. Lea said, showed that Asaf Ali was a man of about the very worst character, and he (Mr. Lea) had known him to be a bad character before that.

Mr. Rolt, he said, left him on the 13th June with the assurance from him that there were no charges against him, and that when there were such he would be given an opportunity of making an explanation and that the reason for not then requiring an explanation was that there were no charges to explain. "I did not," he went on to say, "tell Mr. Rolt that I had two days before that sent a report against him." This report, he said, he wrote at Bhagalpur on the 11th June in the house of the Commissioner. The interview took place on the 13th June, and Mr. Rolt went back to Kissenganj. Between that date and the 16th, Mr. Lea said he made no enquiries of any sort. On the 16th a telegram (Exhibit No. 28) was sent suspending Mr. Rolt and directing him to make over charge to Shamsul Zoha. Mr. Rolt at once wired back (Exhibit No. 29) protesting against Shamsul Zoha being appointed to take over charge. Mr. Lea replied that the orders of the Board were imperative and that he had himself recommended Shamsul Zoha. Mr. Rolt wired for one day's time to make over charge, but he was told to obey the Government order. Then followed certain letters, dated the 16th June, from Mr. Rolt to Mr. Lea (Exhibits Nos. 33, 34 and 35). In these Mr. Rolt vehemently protested against Shamsul Zoha being put in his place. The first letter ran as follows:—

"MY DEAR LEA,

"Just received telegram suspending me and ordering me to make over charge to Shamsul Zoha to-morrow Of all men in the world Shamsul Zoha is the last man I expected would be permitted under any circumstances to have anything to do with me. How he displayed his feelings towards me in the criminal case is on the record. How he has been interviewing treasurer is known to all. I am surprised and naturally heartbroken at the order of suspension without any opportunity being given me of explaining anything, which you assured me would be given when I personally came and informed you of what report was being spread by the treasurer. I offered then and there to explain anything that might appear to require explanation, but you said it was not necessary. The hands of all my enemies will be strengthened immensely by my suspension. Where am I to go? I cannot possibly leave the house at a moment's notice. I have been here now close on 11 years, and have accumulated round me many things. I presume that the authorities do not intend to turn me out of the house neck and crop till they have at any rate heard what I have to say in my defence. It is impossible for me to leave the house. I have to stay in Kissenganj, as I propose there will be some enquiry, and all papers, etc., are in the office, from which I presume I shall be allowed to call for papers, etc., in my defence. The whole plot is being worked and got up by those against me. What could I do more than on hearing of the plot come in to you, and offer to explain anything that you might consider required explanation? Instead of this I am suspended without being given an opportunity of explaining anything, putting me in a most difficult position, and at the mercy of the others, of whom Shamsul Zoha is one. I informed you how he was seen pouring over the books of Mahomed Hossein with Income-Tax Deputy Collector.

"Till I receive further orders to make over charge to Shamsul Zoha may I postpone making over charge?

The 16th June 1904. (Sd.) A. C. ROLT."

On the 17th Mr. Rolt made over charge. On the 18th Mr. Lea went to Kissenganj and wrote to Mr. Rolt a letter (Exhibit No. 36) sending a copy of his report to the Board of Revenue and of certain telegrams and making an appointment. On the same day he

saw Mr. Rolt, but beyond what was stated in his report to the best of his recollection, he said he gave him no information as to the books or anything else, except that he told him that the first person who had ever given any information against him was Mr. Byrne. Mr. Lea was asked if Mr. Rolt had not on that occasion actually shown him a *hundi* in favour of a well-known banker named Hurruck Chand on which he had borrowed a large sum of money. He replied that he did not quite remember, but that he did remember that Mr. Rolt had mentioned that he had borrowed Rs. 2,500 from Hurruck Chand on a *hundi* as an advance of pay in May, before he started for England. He did not see the *hundi*. Mr. Rolt did not tell him in what form he got the money. Mr. Lea made no enquiries from Hurruck Chand in connection with what Mr. Rolt told him. He was aware, he said, that Mr. Rolt had borrowed Rs. 2,500, but he was not aware that this was on the 22nd May 1903, or that Hurruck Chand had paid the money by two notes of Rs. 1,000 each and other money, or that the identical notes were deposited by Mr. Rolt in the Alliance Bank. He admitted that Mr. Rolt had further told him that he had borrowed a further sum of Rs. 2,000 from Hurruck Chand on the security of a diamond ring in May, just before he started for England Mr. Lea, however, made no enquiries of Hurruck Chand about this. He did not ask for production of his books or send the Income-Tax Collector to see the books. So far as he recollected, Mr. Rolt told him that he had deposited the two sums of Rs. 2,500 and Rs. 2,000 received from Hurruck Chand and certain other sums received by way of interest (or dividends) on shares with his bank in Calcutta.

On this occasion Mr. Lea said he thought he did not ask Mr. Rolt any question, but that Mr. Rolt himself said that every one of the charges in his report he could explain, and that he was perfectly prepared to give his explanation. He also said that after his suspension and after the way he had been treated it would be of course impossible for him to remain at Khagra under any circumstances. He had been suffering in health, the action of the Government having told upon him; that the place was alive with enemies of his, and it would be perfectly impossible, whatever explanation he gave, to work again after having been displaced in this way; and he asked him (Mr. Lea) as a friend whether under the circumstances he ought not to send in his resignation. As a friend he advised him to do so, and said he would strongly advise its being accepted; for he knew his position was an impossible one, whatever explanation might be given. At the same time Mr. Rolt said he would give all the explanations necessary and show that the charges were unfounded. "He then left you to consult his friends?" Counsel asked, and Mr. Lea replied: "He left me to go and consult Mr. Downing and Shamsul Zoha. No; I will not swear that he mentioned these names. I suggested those two names, although I am not prepared to swear to them, because my impression was that he mentioned these names." Later in the day Mr. Rolt came back, and in his (Mr. Lea's) presence wrote from a draft which he brought a letter tendering his resignation (Exhibit No. 37) and he (Mr. Lea) approved of it.

On the following day, the 19th June, Mr. Rolt left for Calcutta, but before he left and before his resignation was tendered Mr. Lea wrote him a letter on the 18th (Exhibit No. 38) in which he informed him he would not go on with the enquiries until he received fresh orders from the Board, and when he left he was, Mr. Lea said, under the impression that he (Mr. Lea) would not make any further enquiry until he received fresh orders on the letter of resignation. As a matter of fact he said he received no orders from the Board of Revenue until a considerable time afterwards—it might be a month afterwards—but on the 20th June he received orders from the Commissioner on the letter of resignation, but the Commissioner, he said, had not been informed that he (Mr. Lea) had told Mr. Rolt he would hold his hand.

On the 20th June (a Monday) Mr. Lea commenced to make further enquiries. On that day, when he was about to record the evidence of witnesses, Babu Rakhal Das, Mr. Rolt's pleader (Mr. Rolt himself having gone to Calcutta), appeared before him and told him that Mr. Rolt was in Calcutta, but he (Mr. Lea) refused to allow him to appear, because he said—in answer to the question why?—it was a preliminary enquiry. He, however, went on to say that in this particular case the objection was that he (Mr. Lea) anticipated that the witnesses would be afraid to speak if Mr. Rolt or his pleader were present. The witnesses were witnesses, he said, whom he was prepared to put into a Criminal Court to prosecute Mr. Rolt, and he was going to hold the enquiry on oath.

"Why should you anticipate this timidity on their part?" asked Counsel. Mr. Lea replied that it was owing to Mr. Rolt's influence in Kissenganj. He did not, however, anticipate any timidity on the part of Masuddi, though he did on the part of Parmeshur Lal, the patnidar, his son, Bunwari Lal, and his two servants (who had bid at the auction) and on the part of Kanhye Lal and Muhamed Hossein. "I thought it best," said Mr. Lea, "to keep Mr. Rolt away from hearing what they (the witnesses) would say. The first great thing was to have their evidence recorded on oath somehow. I knew they would ultimately have to face Mr. Rolt."

Asked "When did you think their timidity would ultimately be got over?" Mr. Lea replied: "When they had once given evidence before me it was not probable that they would at a subsequent hearing refuse to give evidence. There was perjury behind if they did. The question was to get them into the box. The thing was to get them to stick to that same story. Yes, the great point was to have something which they could not get out of without committing perjury, and the best way was not to have the gentleman against whom they were bringing the charges confronting them. Yes, I have had sufficient

experience of this country to know that there is a considerable advantage sometimes in having a witness who is going to make a statement against another confronted with that other. I have heard of natives of this country against whom charges have been brought asking to be confronted with their accusers. I know that many a man will state what is false behind a man's back when he will not dare to say it to his face."

On being asked how the presence of the pleader was to operate on the nerves of the witnesses, Mr. Lea said that Babu Rakhal Das was a very influential person in Kissenganj. What he (Mr. Lea) wanted to get out of them (the witnesses) was the truth, and he had still to get the truth out of them, that is, their statements. "Then," said Counsel, "you assumed their statements were the truth?" "I did not," Mr. Lea replied, "assume that the statements were true. I did not assume any such thing." In this matter Mr. Lea was, he said, acting under the orders of the Commissioner, but not orders in writing. The Commissioner had told him at Bhagalpur between the 9th and 11th June that until charges were framed, Mr. Rolt could not claim to be present, and that it would be better not to allow Mr. Rolt to be present.

Babu Rakhal Das asked him (Mr. Lea) to postpone the enquiry until Mr. Rolt came back.

Asked where was the hurry, having regard to the fact that he had told Mr. Rolt that he would make no enquiry until he got orders from the Board of Revenue, he said that the Commissioner had sent him a telegram, and there were two reasons for hurrying on. In the first place, he was under the impression that he had told Mr. Rolt that he would not continue his enquiries until he got orders *from the superior authorities* and not from the Board of Revenue (as stated in the letter of the 18th June). In the next place, Mr. Rolt had told him that he would be back at Kissenganj on the Monday, but as a matter of fact he did not get back, and he (Mr. Lea) was unable to say when he would get back.

On the 20th June, to the best of his recollection, he (Mr. Lea) received a telegram from Mr. Rolt saying he was coming back at once. Rakhal Das had applied for a postponement on the ground that Mr. Rolt had gone away under the impression that no enquiry would be held, but he (Mr. Lea) told him that even if Mr. Rolt himself had been present, he would not have allowed him to appear. The witnesses were examined one by one, the enquiry being held with closed doors.

I have purposely set out above a transcript of the evidence of Mr. Lea practically in full and just as it was recorded in regard to his interviews with Mr. Rolt on the 18th and 18th June respectively and to the circumstances under which and the object with which he came to hold the enquiry behind Mr. Rolt's back.

I now come to the enquiry itself.

The witnesses, Mr. Lea said, were to have been present on Friday, the 17th, but, in consequence of what had passed on the 18th between Mr. Lea and Mr. Rolt, they were sent away on the 18th, with what instructions he (Mr. Lea) did not recollect. It was either the Excise Deputy Collector or Shamsul Zoha who collected them on Monday, the 20th, but it was the former who brought Kunjo Lal. Masuddi, too, was busying himself in the matter. He was chief prosecutor. [I may here mention that Kunjo Lal was not examined before the committing Magistrate, but his brother, Kanhye Lal, was. Before Mr. Lea, Kunjo Lal stated that it was he who lent the money to the patnidar, Parmeshur Lal, which was said to have been borrowed in order to bribe Mr. Rolt, and that was the case then put forward by the other witnesses also. It is true that Kunjo Lal made a statement that his brother was present "then," but from the context the word "then" clearly refers to another time. This, however, Mr. Lea has explained, as will appear hereafter.] With regard to Kanhye Lal, Mr. Lea said he first heard of Kanhye Lal as a proposed witness on the 20th June, but he corrected himself at once, adding that he was not told of him as a proposed witness. Then he said he was told that on that day (the day of the bribe) Kanhye Lal had been present in the shop (of his firm), but that as Kanhye Lal was away at the date of the enquiry his partner would be a witness, but he did not remember if he asked Kanhye Lal as to that. He was aware, he said, that in the depositions he took down, the name of the person who was alleged to have made the advances was invariably stated to be Kunjo Lal, and that the story now was that it was Kanhye Lal. He was under the impression that *Kunjo Lal* in his statement said that his brother was present at the time. Referring to the last statement in the deposition, "my brother was present then," he admitted that "then" as it was written did not refer to the time of the payment (see, however, his later explanation). Now he said the story was that it was Kanhye Lal who was in charge of the firm and who alone had to do with the transaction. Parmeshur, he said, stated it was *Kunjo Lal* who lent him the money, and Kunjo Lal himself said, "I lent it." At the time of the enquiry the whole case was that it was *Kunjo Lal* who advanced the money. In the original note (Exhibit No. 12) of what Masuddi had stated to him on the 21st May, it appeared he had said Parmeshur Lal borrowed Rs. 4,000 on a *hundi* from *Kunjo Lal* on the 19th or 20th May. Bunwari Lal, the son of Parmeshur Lal (who was not examined by the committing Magistrate), and Genda Lal also stated in their depositions before him (Mr. Lea) that Parmeshur had borrowed Rs. 4,000 on a *hundi* from *Kunjo Lal*, and *Kunjo Lal* himself said it was he who lent the money. Subsequently Mr. Lea stated that he then remembered that it was on the information given to him by Nando Kissore Lal that Kanhye was not present at the time of the enquiry, that Kunjo Lal was asked the last question put to him, and in reply to that he had stated that his

brother was present "then" (meaning at the time of the payment, and this, it seems to me, is quite possible). Mr. Lea said he first knew that Kanhye Lal would be available as a witness the day before the trial (enquiry) before Mr Heard, that is on the 19th July. He did not see him on the 19th, but he saw him on the 20th July between 7 and 9 A.M., when he was brought by Shamsul Zoha. He did not take his statement because he thought it advisable not to do so. Shamsul Zoha, however, told him what he would say, and that was the first time he ever heard what Kanhye Lal would be prepared to say. Mr. Lea further said he was present when Kanhye Lal was examined before Mr. Heard, and he heard him say that for the last three years he had been in charge of the local firm, his brother *Kunjo Lal* having been ill and away at his house in Jaipore district, and that he had returned since last *Magh* (January 1904), but he was unable to say that this was to raise the suggestion that he (Kanhye Lal) alone was able to speak to the transaction of 1903. Anyhow he said the result was the *exit* of Kunjo Lal from the case and the entry of Kanhye Lal to speak to the transaction.

Mr. Lea further stated he was aware from the time he first examined Kunjo Lal that it was not *Kunjo Lal* who lent the money, some of the other witnesses having, he added, said it was the firm of Kunjo Lal who lent the money. He thought some of them did mention the firm, but he did not record it.

"I say," Mr. Lea went on, "the last sentence ('my brother was present then') shows that Kunjo Lal meant that his brother was present when the transaction took place. (After a pause:) The last sentence as written in my record shows that after my examination was closed the witness was subsequently asked that question It was not to corroborate Kunjo Lal. I understood at the time when I examined Kunjo Lal he used the word '*hum*' ('I lent'). I understood him to mean that he had transacted the matter."

Kanhye Lal, Mr. Lea said, was never subpœnaed, nor was he directed to be in attendance until notice was sent to him (Mr. Lea) on the 19th July to come and see him. That notice was sent through Shamsul Zoha. Kunjo Lal was subpœnaed, but he did not think that it was a fact, as suggested by Counsel, that he was brought to Court in police custody; but as a matter of fact he said a protest was made to the Court that all the witnesses were being kept in police custody, including Kanhye Lal.

This completes the evidence of Mr. Lea as to the enquiry made by him.

On the 11th July he referred the matter, he said, to Mr. Heard to take criminal proceedings, and he sent him the statements of the following witnesses—Masuddi, Purmeshur Lal, Bunwari Lal, Genda Lal, Kunjo Lal, Nund Kissore and Mohamed Hossain,—and he told him of the other witnesses who might be summoned if required, namely, Babu Lal and the manager of the Alliance Bank. The name of Kanhye Lal was not mentioned by him, as he only heard of him as a witness on the 19th July.

After the enquiry by Mr. Lea had been completed, as it was with closed doors, Mr. Rolt, who up to this time had no opportunity of making an explanation, sent various letters and telegrams to Mr. Lea.

On the 22nd June he wrote to Mr. Lea (Exhibit No. 40) complaining that contrary to arrangement the enquiry had been proceeded with; that witnesses had been examined and no one permitted to appear on his behalf; that Shamsul Zoha had taken up his quarters in part of his bungalow, and had posted a guard of three police at night. He stated that Asaf Ali Khan, Debi Singh and Masuddi were the prime movers against him, and he asked if it was right and proper that Shamsul Zoha should mix himself up with Asaf Ali and these men and openly receive them in the same bungalow. He begged Mr. Lea to see fair play, and he asked that he (Mr. Lea) would ask the *higher authorities* for permission to let him know who the witnesses were and the statement they had made against him, and to enquire whether or not they will allow him to be heard before passing orders against him.

On the 23rd June he wired to the Senior Member of the Board of Revenue at Darjeeling (Exhibit No. 41) imploring Government to give him a hearing and not to decide against him hurriedly or *ex-parte*, and stating that there was a gigantic plot against him, and that if an impartial officer were deputed and he himself heard everything would come to light, and he asked if he might come to Darjeeling for one day only. The reply (Exhibit No. 2) was "The Board decline to review order already passed." On the same day he wrote again (Exhibit No. 43) complaining that no enquiry had been made with regard to certain allegations made against him with regard to the heirs of one Gopi Modi, and he pointed out how he had been prejudiced. He stated that the heirs of Gopi Modi would now find themselves at the mercy of Debi Singh and his party, and would be coerced with a view to compel them to support anything that they might wish to say against him (Mr. Rolt). Mr. Lea was unable to say that the suggestion that he had not answered either of these letters was not correct. On the 24th June, however, he wrote to Mr. Rolt that he must vacate the bungalow in a week, and on or about the same day he said Shamsul Zoha applied to the Secretary of the Board of Revenue for Mr. Rolt's post (Exhibit No. 44). On the 28th June he wrote (Exhibit No. 46) complaining that Shamsul Zoha had during his absence insisted on opening the part of the house in which he had been permitted to remain in order to show it to Mr. and Mrs. Heard, and he wished to know what it meant. In his examination before me Mr. Lea explained that Mr. Heard had applied for Mr. Rolt's post and he had gone to show Mrs. Heard the manager's house.

On the 30th June Mr. Rolt wrote another letter (Exhibit No. 45) enclosing correspondence between him and Shamsul Zoha (Exhibits Nos. 45, 45*a*, 45*b*, 45*c*, 45*d*). The following is a copy of the letter of the 30th June :—

"KHAGRA,
The 30th June 1904.

"To J. H. LEA, ESQ., *Purnea.*

"DEAR MR. LEA,

"On the 24th I received your telegram informing me that Board of Revenue were unwilling to accept my resignation. I left for Calcutta. On the 28th I returned and received your letter dated 24th asking me to vacate the bungalow. This I have informed you I am arranging to do. The order is a very very hard one. I am under suspension, and no opportunity of any kind has up to date been given to me of explaining anything. I understood from you that I should be allowed to remain in part of the bungalow. I have a great deal of writing to do, copying out letters for a representation which I am preparing to submit to the authorities through you. Shamsul Zoha at first, after my pressing, allowed the Accountant, Debendro Nath Bose, and one Hindi-knowing clerk to assist me in copying out my papers. This day, however, an order has been issued that any one coming to see me will be criminally prosecuted or dismissed. They must not come to see me, and the Accountant, who was told that he might come and do my work out of office hours, has now been ordered not to come near me. I am, therefore, alone with no one to assist me in copying out my papers ; and as my health has suffered too much lately, I find it impossible to complete the representation I had hoped to have placed before you on your next visit. How can I properly prepare my representation alone? No doubt the object of the orders issued by M. Shamsul Zoha is intended to lower me, as far as possible, in the eyes of the subordinates of the estate, as well as in the eyes of the public. I enclose you a letter I addressed to Shamsul Zoha and his reply. He is a Muhammadan, and the only explanation I can see for the great interest he has taken in supporting the treasurer, long before I was suspended, is that he is, in some way, connected with those who are most interested in getting me out of the management. The wording of his judgment against me in the criminal case satisfied me that he was biassed to a degree against me and had some ulterior motive in writing as he did. His attitude towards me since he took over charge, though he has tried his best to conceal the part he was taking against me, has clearly proved he is moving secretly heaven and earth to injure me. His orders and attitude may encourage people to give false evidence against me. Considering his delicate position, one would have thought that he would have held aloof from the intrigues against me which are no part of his present management, unless you have specially ordered him to hunt up evidence against me, *which I do not believe possible.* The order to leave the bungalow is no doubt given on his representation. The order prohibiting anyone coming near me on fear of criminal prosecution is another most unfair order, given with the set purpose of making my position, if possible, even more difficult than it is at present. People not connected with the office are now frightened to come near me. It is said they will be prosecuted under "Official Secrets Act" ; and this is the order given by M. Shamsul Zoha : "The clerk and the muharrirs of the Khagra Estate are not to communicate any matter to Mr. Rolt ; if they do so, they will render themselves liable to prosecution under the Official Secrets Act." People are ignorant and do not know what the new Act is. Even workmen are now frightened to work for me, as they say they dare not do so. This is my position at present in this out-of-the-way place, all alone as I am. M. Shamsul Zoha receiving Asaf Ali Khan in his bed, room and other orders issued by him are all clear indications that I was justified in begging you not to send M. Shamsul Zoha to relieve me. I need not comment on the letter of the officiating manager, Shamsul Zoha, which letter speaks for itself.

Yours truly,
(Sd.) A. C. ROLT.

"*P.S.*—I am unable to copy out this letter, and have therefore sent it to Accountant and asked him to copy it out. I have not seen him, as by doing so I would make him liable to criminal prosecution or dismissal.

(Sd) A. C ROLT"

On the 2nd July Mr. Lea replied (Exhibit No. 49) as follows :—

"PURNEA,
The 2nd July 1904.

"MY DEAR ROLT,

"Your letter of 27th June 1904 and other letters. I send you in a separate cover a copy of Collector's No. 28, dated 23rd May 1895. As to the attitude of Mahomed Shamsul Zoha,

he has been directed by me to make enquiries on many matters, and it is of course the duty of both of us to find out all that we possibly can with regard to the charges against you in any way that we think proper. I am, however, writing to him to allow Debendro Babu or any other clerk you may want to help you to work for you and give you access to any papers you may require.

Yours sincerely,
(Sd.) J. H. LEA."

With regard to the statements contained in Mr. Rolt's letter of the 30th June Mr. Lea said he enquired and ascertained that they were true. He objected, he said, to what had been done. He considered it objectionable. The order (Exhibit No. 47) of Shamsul Zoha was as follows:—

"The clerks and the muharrirs of the Khagra estate office are hereby warned not to communicate any matter of the Khagra estate office to Mr. Rolt as long as he is out of office. If they do so, they will render themselves liable to prosecution under the Official Secrets Act or dismissal They must not interview Mr. Rolt without special permission of the Manager or the Collector.

"Show to all clerks and muharrirs and return to me.

(Sd.) M. SHAMSUL ZOHA."

On the 1st July Mr. Rolt again wrote to Mr. Lea (Exhibit No. 48) complaining that although he had been suspended, he was still, on the 1st July, quite in the dark as to how the case stood against him, and he asked if he was to be given an opportunity of being heard. He pointed out that the great delay that had taken place had strengthened the hands of his enemies and given an opportunity for the concocting of false evidence against him. How Shamsul Zoha had been acting would be clear when he (Mr. Lea) perused the correspondence that had taken place between them, copies of which he was sending. "I am being treated in a very hard way," he said, "and those working against me are encouraged seeing the way Shamsul Zoha treats those who are against me. I say no more, but can only appeal to you."

On the 4th July Mr. Rolt again wrote to Mr. Lea (Exhibit No. 50). His letter is as follows:—

"KISSENGANJ,
The 4th July 1904.

"MY DEAR MR. LEA,

"For some days I have been thinking of writing and asking you if it is too late for you to reconsider the whole position of affairs; undoubtedly my order for suspension was given on receipt of your report, which report has been made before you had an opportunity of hearing anything I had to say, and which report, I firmly believe, would never have been made, anyhow in the form it was made, had you before you the facts which I could have placed before you, and some of which I did not show you when it was too late. You believed all that was told you, but is it even now too late for me to try and prove to you that the representations made to you were false? I believe you would do me justice even at this stage of the case, if I could have an opportunity of placing before you my side of the case from the date when I first took over the management up to the present moment.

Because you made a report against me, this is no reason for your never changing your opinion. I believe you must have changed your opinion at least on many points. Of course I expect no reply to this. Everything rests with you.

Yours sincerely,
(Sd.) A. C. ROLT."

To that letter Mr. Lea said he did not reply, but on the 10th July he wired that a prosecution had been ordered, and on the 10th July he sent the papers to Mr. Heard.

On the 11th July Mr. Rolt came and saw him and surrendered and begged that there should be no warrant of arrest issued, as he considered it would be putting upon him an unnecessary indignity. "I told him," said Mr. Lea, "that the matter had been referred to the Subdivisional Officer of Kissenganj (Mr. Heard), but I did not mention that he was an applicant for his post. I told him that he need not fear arrest, as I considered there was no chance of his absconding." He went on to say that he would give him a letter to the Subdivisional Officer to prevent anything of that sort taking place, and he in fact gave such a letter. Mr. Rolt had told him that he had come to Purnea, as it would be easier to get sureties there. On the same day (the 11th July) he sent a wire addressed to Kissenganj (to Mr. Heard) stating that Mr. Rolt was in Purnea and would be with him the following day. Both he and Mr. Rolt were under the impression that Mr. Heard was in Kissenganj, and he knew that Mr. Rolt had come straight that day from Kissenganj. He was not aware

that on the 11th Mr. Heard left Kissenganj and went 40 miles out, but he subsequently ascertained that he was in camp when he received his report. As a matter of fact when the telegram reached, Mr. Heard was in camp. He issued a warrant for Mr. Rolt's arrest, but he (Mr. Lea) was not aware that he received the wire that Mr. Rolt would be with him the following day an hour before he issued the warrant for Mr. Rolt's arrest. He (Mr. Heard) required a recognizance for Rs. 8,000 and two sureties for Rs. 4,000 each. He knew that the Police Officer Mr. Hirst went to arrest him in his own bungalow, and that Mr. Rolt was unable to get two sureties there, and that on hearing of his (Mr Lea's) letter Mr. Hirst on his own responsibility accepted a recognizance of Rs. 16,000. He (Mr. Lea) strongly disapproved of Mr. Heard's action.

There is only one other matter to be mentioned to complete Mr. Lea's evidence as to the part he himself took in getting up the case against Mr. Rolt, namely, the reasons given by him for not allowing Mr. Rolt an opportunity of explaining, and I shall refer to that now.

He said that prior to Mr. Rolt's suspension he never gave him an opportunity of knowing what charges were made against him, though he had appealed to him to do so. He (Mr. Lea) never gave him the slightest clue to the charges that were being made against him. That line of conduct was partly of his own initiative and partly under orders of his superior officers, that is of the Commissioner only—Mr. Macpherson. At that time he knew that Mr Rolt had served the Court of Wards for a considerable number of years, but he did not know that his service had been one of great credit to himself. He was aware, however, that certain officers considered that he had worked very well. That was from his confidential box and official records. He was aware of this when he adopted this line of conduct. Mr. Macpherson was also aware of that. "I did not," he said, "consider the question of fairness to Mr. Rolt. I simply wished to get at the bottom of what might be a great scandal. It was a great scandal."

Yes; he thought it was quite fair under the circumstances to adopt that course towards Mr. Rolt. He knew that he was being charged with matters which meant absolute ruin to him. He knew that charges of a like nature had been made against him before.

In acquitting and discharging Mr. Rolt after the verdict of the Jury I considered it my duty to make the observations which have been reported with substantial, though not verbal, accuracy in some of the newspapers.

Ordinarily it is no part of a Judge's duty to interfere with the methods adopted by executive officers in collecting evidence against persons suspected of crime or with the methods of conducting departmental enquiries as to the conduct of subordinate officers, unless it appears that the methods adopted are calculated to throw suspicion upon the evidence given in a subsequent trial which comes before the Court.

In the present case it appeared to me that the methods adopted not only in collecting evidence, but in conducting the enquiry before Mr. Lea could not but throw suspicion upon the evidence subsequently given at the trial of Mr. Rolt.

Up to the 21st May all that Mr. Lea had to go upon was mere rumour or gossip started during the absence of Mr. Rolt in England—rumour or gossip apparently so indefinite that it did not occur to Mr. Lea to make enquiries as to whether there was anything suspicious in connection with the sale itself. He had asked Mr. Byrne, Mr. Downing and Shamsul Zoha, whom he knew to entertain no kindly feelings to Mr. Rolt, if they could get any evidence against Mr. Rolt, and they had failed to ascertain anything definite. He knew that for years endeavours had been made to oust the Manager by alleging all sorts of dishonesty and misconduct against him, and that after a careful and searching enquiry Mr. Rolt had been completely and honourably acquitted and his character vindicated.

On the 18th May Mr. Rolt had dismissed his treasurer and recommended his being prosecuted on charges of a serious nature, and three days later, on the 21st May, Mr. Lea sent for this dismissed servant to his private house to see if he could get any information from him relative to the rumours he had heard from Mr. Byrne, Mr. Downing and Shamsul Zoha. If Mr. Rolt had in fact taken a bribe and if Masuddi was present at the time and had full knowledge of the whole transaction, it was hardly likely that Mr. Rolt would not only have dismissed him, but would have recommended his prosecution on a false charge; but this does not seem to have struck Mr. Lea. Having obtained the statement of the dismissed servant and having through the Income-Tax Deputy Collector got possession of certain books supposed to contain damning evidence against Mr. Rolt, Mr. Lea proceeded to make enquiries from Asaf Ali Khan and Debi Singh (a relative of Masuddi Singh), both men of notoriously bad character and both persons on bad terms with Mr. Rolt.

In possession of the information from those sources and of the apparently vague gossip communicated by Mr. Byrne, Mr. Downing and Shamsul Zoha, Mr. Lea sent off his report to the Board of Revenue on the 11th June, and Mr. Rolt, without having had any opportunity of making any explanation, was suspended on the 16th June. Why under the circumstances he was not allowed any such opportunity is best known to Mr. Lea. A sense of ordinary fairness would seem to suggest that he ought to have had that opportunity before his suspension and certainly before his prosecution.

It is only fair in this connection to say that in re-examination Mr. Lea stated that the reason why he did not give information to Mr. Rolt was that he considered that if Mr. Rolt once knew what was being done, he would make it very difficult to obtain any further information, and it is possible this may account for Mr. Rolt not having been asked to give any explanation at any time.

As to the witnesses whom Mr. Lea examined, he admitted that at no time did he trust Masuddi Singh, and he anticipated that the others would be afraid to speak against Mr. Rolt in his presence or in the presence of his pleader, and therefore he thought it best to keep Mr. Rolt out of Court, and that the great thing was to have their evidence recorded on oath. I do not think I am doing Mr. Lea an injustice when I say that at the enquiry his object according to his own evidence was to get them into the box and have them tied down upon oath to a story from which there was no going back without the risk of an immediate prosecution for perjury.

He doubtless, as he said, wanted to get at the truth, but his proceedings from his own account of them bear the appearance of a desire on his part to see that if a prosecution should subsequently be started, the witnesses would have to stick to a story which they would not have told if confronted with Mr. Rolt.

The fact that Mr. Lea should have considered it necessary to pin the witnesses to a story as he did to my mind at the very outset throws the gravest suspicions upon the whole evidence given at the trial. If it had been necessary for me to sum up the evidence to the Jury, I should have directed them that, having regard to the source of the information upon which the case was started, the refusal to allow Mr. Rolt an opportunity of explaining, the neglect of Mr. Lea to make any enquiries as to the matters which Mr. Rolt was putting forward in his letters and at the interviews which he had with him as showing that there was a plot going on against him; and, lastly, having regard to the way in which apparently unwilling witnesses were made to commit themselves to a story on oath behind Mr. Rolt's back, they were bound to regard the evidence with the greatest caution, and that unless they found it was in itself credible or corroborated by extrinsic circumstances it was open to them not to accept it. It was these matters which I had in my mind when, addressing Mr. Rolt, I spoke of the manner in which the case was started and the prosecution conducted in the earlier stage, and stated that in my opinion the methods adopted were sufficient to damn the whole evidence in the eyes of an impartial jury. I went on to say that, apart from the effect which these circumstances might have upon the case, when we come to consider the actual evidence as to the giving and receiving of the bribe in the case, we found that it had entirely broken down. This matter, however, I shall deal with later.

I now come to the next stage in the case, the enquiry before the committing Magistrate.

I have referred to the circumstances attending the admittedly unnecessary issue of the warrant for Mr. Rolt's arrest and to the fact that the committing Magistrate was himself a candidate for the post which Mr. Rolt must necessarily have vacated if the prosecution should have succeeded.

When the enquiry before Mr. Heard commenced a very regrettable incident occurred. Mr. Lea's evidence as to this is as follows:—There were two docks in the Kissenganj Court—one the ordinary dock near the daïs and to the pleaders' table, and the other right away at the far end of the Court in the corner, used as an overflow dock when there were more prisoners than the former dock could hold. When there was only one prisoner he would usually be put in the dock near the Magistrate's table. A prisoner would not ordinarily be put on the far-away dock, but it would depend on the discretion of the Magistrate. Mr. Rolt had often been in the old Court before. This was a new Court. When the case began he walked into the dock close by the table. Mr. Rolt was an Honorary Magistrate empowered to try cases sitting singly. His pleader first of all asked that he might be allowed to sit by him to assist him during the enquiry. He (the Magistrate) refused to allow that, and Mr. Rolt walked into the ordinary dock by the Magistrate's daïs, and Mr. Heard ordered him to go to the dock at the far end of the room. He remembered, he said, the matter being represented to Mr. Heard that he should be allowed to stay in the ordinary dock near the Magistrate's table, because his being sent to the other was simply a grossly offensive insult to him, and Mr. Heard ordered him to go at once to the other dock. He (Mr. Lea) was sitting in Court at the time. As Magistrate he had no power to interfere, but as Collector he did interfere. He instructed the Government Pleader to move the Magistrate to allow Mr. Rolt to stand in the other dock. He did not do so then. The Government Pleader said that as the order had been already made he would wait till lunch time, and the question would then again be raised.

The point was raised again at lunch time by Mr. Rolt's pleader at his (Mr. Lea's) suggestion.

The Government Pleader did not say anything. He was preparing to get up when Mr. Heard cut him short and said that he had already passed his orders. Mr. Heard also told Mr. Rolt that he did not seem to understand the necessity to obey orders when they were passed. He (Mr. Lea) did not like this. He felt that it was a perfectly gratuitous insult. He was unable to say that it was quite clear that Mr. Heard's feelings were hardly of a judicial character.

In addressing Mr. Rolt I am reported to have said, and I believe I did say, that Mr. Heard had commenced his proceedings by putting upon Mr. Rolt an intentional insult and indignity. This was the opinion of Mr. Lea who was present. To my mind Mr. Heard's action in this connection was most reprehensible.

There is another matter to which I referred in addressing Mr. Rolt. I stated that from what had been brought to light in the course of the trial the transfer was fully justified. With regard to this Mr. Lea's evidence is as follows:—He knew that Mr. Rolt had applied

to have the case transferred from the Purnea district. Amongst the grounds he stated various matters as to which he (Mr. Lea) had been cross-examined. The ground on which he based his application was that he would not and could not have a fair hearing owing to the bias and prejudice created against him. The application to transfer the case to the High Court was opposed, but not the application for transfer if it should be the district of Bhagalpur. That was under instructions from him. He did not remember consulting the Commissioner, but it was under his general instructions. He (Mr. Lea) pressed for the hearing to be either at Bhagalpur or Dinajpur. The Commissioner resided at Bhagalpur. Dinajpur was in another division. So far as he recollected, the question was pressed for Bhagalpur. So far as he recollected, Dinajpur was not mentioned. He thought Mr. Macpherson came as Commissioner in January 1904.

In another part of his evidence Mr. Lea stated that he understood from Mr. Rolt's letter that he was complaining about the methods by which his position was being lowered in the estimation of all round him. His experience told him that such a state of things did assist the bringing of false evidence. If it was known, he said, that the authorities had turned their face against a man and treated him with contempt, it certainly fostered the production of false evidence against him. He did enquire in the matter of the alleged orders which Shamsul Zoha had given, prohibiting the clerks and others communicating with him, and he found that what had been stated by Mr. Rolt was true.

In my opinion Shamsul Zoha's orders and conduct towards Mr. Rolt, the unnecessary issue of the warrant, and especially the public affront put upon him by Mr. Heard, were all calculated to create prejudice and fears in the minds of the public against Mr. Rolt and to encourage unscrupulous people to come forward and give evidence against him. These circumstances I considered fully justified the transfer of the trial from Purnea and showed how necessary it had been, and in opposing the transfer to the High Court and pressing that if there was to be a transfer it should be to Bhagalpur, I think that Mr. Lea unfortunately laid himself open to the suggestion, probably unfounded, of being an unduly zealous prosecutor.

I expressed my astonishment that an attempt should have been made by the Board of Revenue to prevent Mr. Rolt drawing upon his own moneys in the Alliance Bank. Mr. Lea's evidence as to this is as follows:—

Asked if he knew that steps had been taken to stop Mr. Rolt drawing upon the Alliance Bank, he said he did not know till a few days ago—last week. He now knew that such steps had been taken. He knew that attempts had been made by the Secretary to the Board of Revenue, but he did not know when they were made. The Legal Remembrancer had recommended that the Board of Revenue should apply to stop Mr. Rolt drawing upon his account. In May the Member of the Board was Mr. Savage. He (Mr. Lea) had not seen the letter to the Bank. He did not suggest that course. In some communications to him it was suggested to attach all Mr. Rolt's funds in his Bank. He thought it was the Legal Remembrancer who suggested this. He was not told the reason, but he imagined that if it was found that he had been defalcating, his money would have been available to make a refund. He did take steps in the matter and consulted the Government Pleader, but he took no further steps beyond replying to his superior officer. The Secretary to the Board of Revenue did communicate with the Bank to stop the account, but he was not aware that pressure was brought to bear on the manager to prevent Mr. Rolt's using his funds.

I need hardly say that the Board of Revenue had no power without an order of the Court to prevent the Alliance Bank honouring Mr. Rolt's cheques or allowing him otherwise to deal with his own money, and I was surprised to learn from Mr. Lea's evidence that steps had been taken to stop Mr. Rolt drawing upon his account.

What was shown by the Bank to Babu Nund Kissore Lal when he was deputed to Calcutta did not appear in evidence; but according to Mr. Lea, that gentleman ascertained that notes for Rs. 1,000 each had been paid into the Bank by Mr. Rolt shortly before he (Mr. Rolt) left for England, and the numbers of some of those corresponded with the numbers of some of the notes into which it was said the Rs. 5,000 paid by way of bribe to Mr. Rolt had been changed, and which numbers appeared in the books procured by Babu Nund Kissore Lal at Kissenganj.

Had the entries in the Kissenganj books been genuine, this doubtless would have been a very strong corroboration of the story put forward originally by Masuddi Singh. Mr. Rolt, however, offered to explain, and in fact did explain, where he got the money which he deposited, but unfortunately Mr. Lea did not think it necessary to make any enquiry from Hurruck Chand to ascertain whether there was any truth in his explanation.

As a matter of fact the evidence before me as to the entries in the Kissenganj book was of such a nature as to leave no doubt that these entries were not genuine. I do not propose to discuss that evidence at length. It is sufficient to say that the witnesses to the alleged bribery, and especially Masuddi Singh, so hopelessly broke down that it was evident that the whole story was a wicked concoction, and that apparently is the view which the Jury took.

With regard to Masuddi Singh's dismissal it appears from his evidence that his appeal was taken up at Khagra in the Manager's cutcherry a day or two after he had given his evidence before Mr. Heard. He had a pleader, Babu Rakhal Das (already mentioned). Maulvi Shamsul Zoha had taken all his explanations, he said, five or six days before the hearing by Mr. Heard, and he (Masuddi) had also put in an explanation in writing. Mr. Lea, he said, never asked him anything. He wrote something to Shamsul Zoha. At

that time he said: "I did not know that Shamsul Zoha was anxious to get Mr. Rolt's appointment. Why should I hear?" In his explanation to Shamsul Zoha he was asked about the note register. He (Masuddi) did not put that in writing. There was an explanation by him about a note register. Mr. Lea did not ask him about a note register at Purnea before this in May or June. He asked him as to where Mr. Rolt used to get the notes from, and he (Masuddi) said he got some from outsiders, nothing else. He never asked him about any entries in his handwriting in the note register. On the day (the day the appeal was decided) Mr. Lea never asked him a single question. He heard from the amla he was reinstated. He did not hear the order given in the cutcherry. Mr. Lea did not call him, but he did not know if he told him about being reinstated. He could not say if in disposing of the appeal he acted simply on what he was told by Shamsul Zoha.

If this evidence be correct, I can only say it was very unfortunate that Maulvi Shamsul Zoha should, as it would appear, have decided the appeal or made the enquiry upon which it was decided. Having regard to the result of the appeal, it might be inevitable that Masuddi should be reinstated, but his reinstatement would, I think, be likely to prejudice Mr. Rolt in the district.

I find I have omitted a portion of Mr Lea's evidence given on the last day, which may, though not necessarily, show a want of consideration towards Mr. Rolt.

He said that in September 1904, after the case had been committed to the Sessions Court, he called upon Mr. Rolt to answer certain matters in a departmental enquiry. These were, he said, in respect of statements made by Asaf Ali Khan and statements made by other people and other matters. He (Mr. Rolt) wanted to see the books of Asaf Ali Khan. He wanted a few days. He (Mr. Lea) did not think it was 15 days. He sent for the books at his request, but never showed them to him. He had called upon him to answer in 10 days. He sent in his answer after about 12 or 14 days. He (Mr. Lea) was unwilling to accept it because he (Mr. Rolt) had asked him to produce certain books for his perusal, and he had sent for them and they had not arrived. He wanted him to wait till the books came. His explanation was given without having any opportunity of seeing Asaf Ali Khan's book. He would not wait for them. He said he wanted to get away for a holiday.

From the beginning he complained it was unfair to deal with the departmental enquiry while this case was pending. The statements of the witnesses examined by him (Mr. Lea) were in the record.

Here again if it could have been avoided, I cannot but think it would have been more expedient to have deferred any further departmental enquiry until after the trial of the present case.

Before the case was concluded, but after all the material witnesses had been examined, the Jury handed up to me a statement which had been handed round amongst themselves and signed or initialled by all of them, in which it was said: "The prosecution witnesses have one after the other entered the box, contradicted themselves over and over again, and left it utterly discredited.

"It is surely completely proved that the case against the accused has been concocted by the hangers-on of the Khagra Estate and assisted by the culpable weakness of Mr. Lea in giving credence to their stories, and in appointing to try the case a man who was himself an applicant for Rolt's billet.

"If this is the opinion of the Jury, it is a waste of the time of the Court and of the money of the accused to allow the case to go on. We should intimate to the Clerk of the Crown that 'the Jury do not desire to hear further evidence.'" This statement I handed to the Standing Counsel, who stated that having regard to that expression of opinion by the Jury it would be useless to call further evidence or in fact to address the Jury.

Thereupon without summing up the evidence, which under the circumstances would have been unnecessary, I asked the Jury to return a verdict upon the evidence before them, and they returned a unanimous verdict of "Not guilty," appending thereto a rider to the following effect:—"We consider that a grave injustice has been done to Mr. Rolt, and that the present prosecution should never have been undertaken, and we recommend Mr. Rolt's case to the most favourable consideration of the Government."

In acquitting Mr. Rolt in accordance with the verdict I made certain observations as to the manner in which the case had been got up and conducted; and, as these observations reflected upon the conduct of the officers concerned, I considered it my duty to make this representation to the Government of Bengal.

I have given practically *verbatim* from my notes of Mr. Lea's evidence all that he said with reference to the matters in connection with which I have animadverted upon his conduct and that of Mr. Heard and Maulvi Shamsul Zoha, and I venture to think that there is nothing which I have said which was not fully justified by the circumstances of the case.

I cannot help feeling that if Mr. Lea had displayed a little more tact and been a little less prone to take for granted what was told him by the dismissed treasurer and other persons who were alleged, if not also admitted, to be hostile to Mr. Rolt, and if he had allowed Mr. Rolt to give an explanation or had himself made enquiries as to matters which Mr. Rolt had put before him, this unfortunate trial would never have taken place.

GILBERT HENDERSON,

The 26th December 1904. *Judge, High Court.*

FINAL FORECAST OF THE OILSEED CROPS OF BENGAL, 1904-1905.

THE following note is published for general information.

R. W. CARLYLE,

Offg. Chief Secy. to the Govt. of Bengal.

The 15th May 1905.

DEPARTMENT OF LAND RECORDS AND AGRICULTURE, BENGAL.

Final Forecast of the Oilseed Crops of Bengal, 1904-05.

Explanatory.—This forecast furnishes the final estimates of the area and outturn of the different kinds of oilseeds, both *bhadoi* and *rabi*, grown in these provinces. The chief oilseed crops are mustard (white and brown) and rape, *sesamum* (*til*), linseed, castor, Niger oilseed (*sirguja*), and *eruca sativa* (*taramani*). Mustard and rape occupy about 54 per cent. of the total area under oilseeds, and linseed occupies about 22 per cent. The bulk of the mustard and rape is cultivated in the districts of the Rajshahi Division, in Dacca, Mymensingh, Purnea, and the Sonthal Parganas. Linseed is chiefly grown in Darbhanga, Saran, Champaran, Gaya, and Nadia. *Til* or *ginjelly* is grown chiefly in Midnapore, Jessore, Bogra, Pabna, Dacca, Mymensingh, Backergunge, Tippera, Noakhali, Angul, and Hazaribagh.

2. *Character of the Season.*—The rainfall in October was, for the most part, deficient, except in Bihar where the rainfall was above normal. Drought prevailed since then until January when rainfall was again general. In February the oilseed crops were seriously damaged by hail, frost, and rain. The damage occurred chiefly in the Bihar district, and in the Rajshahi Division where the bulk of the oilseed crops are grown. Injury done by insect pest is reported only from the Monghyr district. The excessive rainfall of March and April has hampered the progress of harvesting operations. On the whole the season was an unfavourable one for the growth of oilseed crops.

3. *Area sown.*—The total normal area under different oilseed crops is now estimated at 3,982,100 acres. The area actually sown this year is 3,673,500 acres against 3,832,200 acres of last year.

4. *Character of the crop.*—It will be seen from Appendix I that only one district, viz., Dacca, has reported a normal crop; five districts, 90 to 99 per cent.; 12 other districts, 80 to 89 per cent.; 7 districts, 70 to 79 per cent; 10 districts, 60 to 69 per cent.; the remaining 10 districts have reported 50 per cent. and less. According to the district estimates, the outturn of the different kinds of oilseed crops for the province as a whole amounts to 76 per cent. of an average crop against 87 per cent., which was the District Officers' estimate in the preliminary forecast. Considering the excessive damage caused by frost in February and excessive rainfall at the harvesting period, the reduction made by the District Officers is probably more than justified.

5. *Gross outturn.*—Taking 6 maunds per acre to be the normal rate of outturn for linseed, rape, and mustard, and 4½ maunds per acre for other oilseeds, the gross yield of all the oilseed crops for these provinces during 1904-05 amounts to 573,900 tons against 664,300 tons produced in the preceding year.

N. D. BEATSON BELL,

Offg. Director of the Dept. of Land Records and Agriculture, Bengal.

CALCUTTA,

The 3rd May 1905.

APPENDIX I.

Final Forecast of the Oilseed Crops of Bengal, 1904-1905.

1	2	3	4	5	6	7	8	9	10	11	12
Division.	District.	Total area of the district.	Total area estimated to be under cultivation.	Name of oilseed.	Approximate normal area under oilseeds.	Approximate area sown last year (1903-1904).	Estimated area sown this year (1904-1905).	Taking 100 to represent the normal outturn, how much represented the outturn last year (1903-1904)?	Taking 100 to represent the normal outturn, how much will represent this year's outturn (1904-1905)?	Remarks by District Officers.	Remarks by the Department of Land Records and Agriculture, Bengal.
		Acres.	Acres.		Acres.	Acres.	Acres.				
BURDWAN.	Burdwan	1,730,960	1,284,200	Linseed	28,200	26,700	17,500	93	61	The decrease in the estimated area under linseed is due to want of rain during the sowing season.	
				Rape and mustard.	23,700	23,300	21,100	93	61		
				Til { Rabi ...	600	600	600	63	38		
				Til { Bhadoi ...	3,400	3,300	3,300	93	16		
				Other oilseeds ...	1,900	1,500	1,500	95	73		
				Total ...	57,700	55,400	44,000	95	64		
	Birbhum ...	1,121,250	776,300	Linseed	800	600	600	80	50		
				Rape and mustard.	2,000	1,200	1,000	80	50		
				Til—Rabi ...	400	400	400	80	50	Rain has done much damage to the crop.	
				Total ...	3,200	2,200	2,000	80	50		
	Bankura ...	1,677,440	642,800	Linseed	1,600	1,100	1,000	75	46		
				Rape and mustard.	7,000	8,800	7,400	70	49	The low outturn is due to the damage caused by the constant rainfall since the middle of January 1905 till the harvesting time.	
				Til { Rabi ...	2,700	3,500	3,500	70	49		
				Til { Bhadoi ...	3,300	3,900	3,100	70	70		
				Other oilseeds ...	8,000	7,600	6,800	75	46		
				Total ...	22,000	24,700	21,800	72	50		

1	2	3	4	5	6	7	8	9	10	11	12
Division.	District.	Total area of the district.	Total area estimated to be under cultivation.	Name of oilseed.	Approximate normal area under oilseeds.	Approximate area sown last year (1903-1904).	Estimated area sown this year (1904-1905).	Taking 100 to represent the normal outturn, how much represented the outturn last year (1903-1904)?	Taking 100 to represent the normal outturn, how much will represent this year's outturn (1904-1905)?	Remarks by District Officers.	Remarks by the Department of Land Records and Agriculture, Bengal.
		Acres.	Acres.		Acres.	Acres.	Acres.				
BURDWAN—concld.	Midnapore ...	3,319,040	2,190,600	Linseed	15,000	15,000	15,000	70	62	The area sown is below the normal on account of the want of rain in October and the outturn has suffered from the heavy rains in the cold weather.	
				Rape and mustard.	30,600	28,200	28,200	75	67		
				Til { Rabi ...	20,700	17,500	19,300	75	71		
				Til { Bhadoi ...	10,800	8,900	9,800	70	79		
				Other oilseeds ...	21,000	14,500	14,500	70	51		
				Total ...	98,100	84,100	86,800	73	66		
	Hooghly ..	1,038,640	488,900	Linseed	2,100	600	2,100	76	89		
				Rape and mustard.	3,300	1,900	3,300	92	87		
				Til { Rabi ...	1,200	300	1,200	50	98		
				Til { Bhadoi ...	300	300	300	60	60		
				Other oilseeds ...	1,900	800	1,300	57	65		
				Total ...	8,800	3,900	8,200	74	85		
	24 Parganas ...	3,100,160	1,079,700	Linseed	1,600	1,300	1,400	100	94		
				Rape and mustard.	1,600	1,400	1,400	97	97		
				Til { Rabi	800	800	800	54	91		
				Til { Bhadoi ...	100	100	100	[illegible]	90		
				Other oilseeds ...	3,000	2,300	2,300	100	99		
				Total ...	7,100	5,900	6,000	97	98		
	Nadia ...	1,787,360	1,043,800	Linseed	55,000	109,300	56,600	58	44	The decrease in area sown is due to revision made, and in outturn is due to rains in February and March 1905.	
				Rape and mustard.	40,000	18,300	28,000	56	44		
				Til { Rabi ...	5,300	4,500	5,000	53	42		
				Til { Bhadoi ...	200	500	900	62	41		
				Other oilseeds ...	15,000	7,900	8,000	62	46		
				Total	115,500	140,500	98,500	58	44		

PRESIDENCY.	Murshidabad	1,371,520	965,500	Linseed	27,000	30,700	29,300	63	50	The decrease in the outturn is due to frost.
				Rape and mustard	19,000	22,200	19,800	64	77	
				Til { Rabi ...	5,700	5,900	6,000	64	55	
				Til { Bhadoi ...	1,300	1,200	1,400	63	82	
				Other oilseeds ...	14,500	17,400	17,200	60	79	
				Total ...	67,500	77,400	73,700	62	68	
	Jessore ...	1,872,000	1,192,000	Linseed ...	36,200	35,600	30,600	72	54	The decrease in the outturn is due to untimely rainfall and hailstorm
				Rape and mustard.	51,400	41,000	40,500	68	63	
				Til { Rabi ...	22,000	20,400	19,500	74	64	
				Til { Bhadoi ...	4,600	3,200	3,000	73	69	
				Other oilseeds ...	6,800	5,300	4,800	53	51	
				Total ..	123,600	103,500	98,400	70	60	
	Khulna ..	2,049,542	870,000	Linseed ...	4,700	5,200	5,200	87	87	
				Rape and mustard.	56,000	47,700	47,700	84	84	
				Til { Rabi ...	5,800	5,000	5,000	91	91	
				Til { Bhadoi ...	1,500	1,200	1,200	93	93	
				Other oilseeds ...	5,000	5,000	5,000	65	65	
				Total ...	75,000	64,100	64,100	85	85	
RAJSHAHI.	Rajshahi ..	1,639,520	1,289,100	Linseed ...	5,200	5,200	5,800	100	85	
				Rape and mustard.	112,300	85,000	75,000	96	85	
				Til { Rabi ...	400	400	300	96	85	
				Til { Bhadoi ...	3,400	3,000	3,200			
				Other oilseeds ...	1,000	1,000	1,500	75	75	
				Total ...	122,300	95,300	85,800	96	85	
	Dinajpur ...	2,525,440	1,336,200	Linseed ...	100	100	100	98	75	The crops suffered from frost, hence the low outturn.
				Rape and mustard.	126,000	130,000	126,000	100	75	
				Til—Bhadoi ...	100	100	100	90	75	
				Total ...	126,200	130,200	126,200	100	75	
	Jalpaiguri ...	1,895,680	928,200	Rape and mustard.	31,800	31,100	27,400	81	82	
				Til—Rabi	400	1,000	100	75	64	
				Total	32,200	32,100	27,500	81	82	
	Darjeeling ...	744,960	100,000	Rape and mustard.	7,500	7,000	7,000	85	86	
				Total ...	7,500	7,000	7,000	85	86	

1	2	3	4	5	6	7	8	9	10	11	12
Division.	District.	Total area of the district.	Total area estimated to be under cultivation.	Name of oilseed.	Approximate normal area under oilseeds.	Approximate area sown last year (1903-1904).	Estimated area sown this year (1904-1905).	Taking 100 to represent the normal outturn, how much represented the outturn last year (1903-1904)?	Taking 100 to represent the normal outturn, how much will represent this year's outturn (1904-1905)?	Remarks by District Officers.	Remarks by the Department of Land Records and Agriculture, Bengal.
		Acres.	Acres.		Acres.	Acres.	Acres.				
RAJSHAHI—concld.	Rangpur ...	2,235,520	1,224,900	Rape and mustard	198,800	177,300	177,000	77	86	The figures under *bhadoi til* have been furnished by the Subdivisional officer of Nilphamari.	
				Til—Rabi ...	1,300	1,200	1,100	77	88		
				Til—Bhadoi ...	100	...	100	...	100	Rain in the latter part of October last and hoar frost in February last have affected the outturn.	
				Other oilseeds ...	1,100	200	200	75	100		
				Total ...	201,300	178,700	178,400	77	86		
	Bogra ...	809,760	622,900	Linseed ...	15,600	11,000	12,000	60	70	The mustard seeds were damaged to to some extent by frost; hence the decrease in the outturn.	
				Rape and mustard	90,000	60,000	62,000	75	65		
				Til—Rabi	14,000	12,000	13,000	70	70		
				Other oilseeds ...	2,000	1,200	...	60	.....		
				Total ...	121,600	84,200	87,000	72	66		
	Pabna ...	1,176,960	865,300	Linseed ...	7,600	7,000	6,500	100	100		
				Rape and mustard	110,000	100,000	95,000	100	100		
				Til—Rabi ..	33,500	33,000	31,000	100	100		
				Til—Bhadoi ...	12,300	8,200	8,000	100	90		
				Total ...	163,400	148,200	140,500	100	99		

DACCA.	Dacca ...	1,780,480	1,214,500	Linseed ...	7,700	5,200	5,100	100	105	The season is favourable for the crop.
				Rape and mustard.	93,000	93,200	80,800	100	100	
				Til { Rabi ...	12,000	10,800	10,600	100	100	
				Til { Bhadoi ...	3,000	3,600	3,500	100	100	
				Other oilseeds ...	32,000	33,500	33,000	100	100	
				Total ...	147,700	146,300	133,000	100	100	
	Mymensingh	4,052,480	2,405,000	Linseed	13,800	13,800	13,800	62	75	The low outturn is due to the damage done by the frost in the Tangail subdivision.
				Rape and mustard.	430,700	374,400	419,600	92	95	
				Til { Rabi ...	72,000	71,800	72,000	85	90	
				Til { Bhadoi ...	2,300	2,100	2,300	100	100	
				Other oilseeds ...	300	200	300	100	100	
				Total ...	519,100	462,300	508,000	90	94	
	Faridpur ...	1,459,840	1,132,600	Linseed	5,000	5,000	5,000	90	75	The oilseed crops have suffered owing to unusual cold this year and rain during the harvesting season.
				Rape and mustard.	42,500	42,500	42,500			
				Til { Rabi ...	1,000	1,000	1,000			
				Til { Bhadoi ...	6,600	6,600	6,600			
				Other oilseeds ...	4,500	4,500	4,500			
				Total ...	59,600	59,600	59,600	90	75	
	Backerganj ...	2,996,880	1,416,500	Linseed ...	20,000	20,000	20,000	100	90	The outturn is below the normal on account of excessive rain.
				Rape and mustard.	1,500	1,500	1,500	90	80	
				Til—Rabi	25,000	25,000	25,000	100	80	
				Other oilseeds ...	6,500	6,500	6,500	95	85	
				Total ...	53,000	53,000	53,000	99	84	
CHITTAGONG.	Tippera ...	1,599,360	1,209,000	Linseed	4,800	4,400	4,300	83	78	The decrease in the area sown and the short outturn is due to unseasonable rainfall and excessive cold.
				Rape and mustard.	34,500	24,700	24,500	90	93	
				Til { Rabi ...	15,700	13,500	13,000	93	81	
				Til { Bhadoi ...	200	200	200	90	90	
				Other oilseeds ...	800	700	700	67	67	
				Total ...	56,000	43,500	42,700	90	87	
	Noakhali ...	1,052,160	784,800	Linseed	26,700	22,000	19,000	85	60	The decrease both in the area and outturn is due to excessive rainfall.
				Rape and mustard.	8,100	7,800	7,100	76	70	
				Til—Rabi	14,800	10,600	13,600	80	54	
				Other oilseeds ...	700	700	700	80	60	
				Total ...	50,300	41,100	40,400	82	60	

Division.	District.	Total area of the district.	Total area estimated to be under cultivation.	Name of oilseed.	Approximate normal area under oilseeds.	Approximate area sown last year (1903-1904).	Estimated area sown this year (1904-1905).	Taking 100 to represent the normal outturn, how much represented the outturn last year (1903-1904)?	Taking 100 to represent the normal outturn, how much will represent this year's outturn (1904-1905)?	Remarks by District Officers.	Remarks by the Department of Land Records and Agriculture, Bengal.
1	2	3	4	5	6	7		9	10	11	12
		Acres.	Acres.		Acres.	Acres.	Acres.				
CHITTAGONG—concld.	Chittagong ...	1,594,515	559,800	Linseed	500	400	400	90	85	The decrease in the outturn is due to heavy rainfall in the latter part of March last.	
				Rape and mustard.	4,100	3,500	3,500				
				Til { Rabi ...	100	100	100				
				Til { Bhadoi ...	100	100	100				
				Other oilseeds ...	100	100	100				
				Total ...	4,900	4,200	4,200	90	85		
	Patna ...	1,288,000	1,082,100	Linseed	13,400	13,500	12,800	102	47	Frost, hail, and generally unseasonable weather decreased the outturn.	
				Rape and mustard.	12,400	17,500	14,900	96	59		
				Til—Bhadoi ...	500	500	300	94	67		
				Other oilseeds ...	16,100	15,700	14,500	100	71		
				Total ...	42,400	47,200	42,500	99	60		
	Gaya ...	3,015,680	2,207,500	Linseed	63,000	103,700	76,200	100	60	The decrease in the outturn is due to the bad weather that prevailed in February and the first half of March last.	
				Rape and mustard.	17,300	33,000	20,6[illegible]	100	75		
				Til—Rabi ...	10,000	13,700	10,500	100	75		
				Other oilseeds ...	78,000	61,100	60,800	100	75		
				Total ...	169,300	210,500	168,100	100	68		

PATNA.

Shahabad ...	2,706,700	Linseed ...	1,641,500	18,800	18,800	18,800	86	40						
		Rape and mustard ...		3,400	5,300	5,400	87	42						
		Til { Rabi ...		800	800	800	86	46						
		Til { Bhadoi ...		800	600	700	89	62						
		Other oilseeds ...		3,400	5,400	5,400	85	54						
		Total ...		28,600	22,900	22,200	86	44						The decrease in the outturn is due to damage done by frost and rain in February 1905.
Saran ...	1,711,355	Linseed ...	1,357,320	79,500	79,500	79,500	95	58						
		Rape and mustard ...		8,700	10,900	10,900	88	50						
		Til { Rabi ...		300	300	300	75	75						
		Til { Bhadoi ...		700	700	700	75	75						
		Other oilseeds ...		3,400	3,400	3,400	90	60						The low outturn is due to damage done by the frost.
		Total ...		93,600	94,800	94,700	95	51						
Champaran ...	3,359,540	Linseed ...	1,447,680	65,900	68,300	65,300	75	54						
		Rape and mustard ...		19,800	20,600	20,600	75	63						
		Til—Bhadoi ...		5,600	5,500	5,500	60	63						
		Other oilseeds ...		1,100	1,100	1,100	75	75						The decrease in the outturn is owing to lasiiform and frost in January last.
		Total ...		90,300	93,600	92,500	74	64						
Muzaffarpur ...	1,943,400	Linseed ...	1,627,800	41,700	41,300	41,300	80	43						
		Rape and mustard ...		7,400	7,400	7,400	72	47						
		Til—Rabi ...		300	300	300	67	68						
		Other oilseeds ...		6,000	6,000	6,000	73	52						
		Total ...		54,900	54,900	54,900	63	44						
Darbhanga ...	2,142,600	Linseed ...	1,657,000	171,000	170,800	168,700	89	69						The frost which fell in February last damaged the crops to a certain extent, hence the outturn is low.
		Rape and mustard ...		46,300	46,900	47,000	86	71						
		Til { Rabi ...		400	400	400	75	61						
		Til { Bhadoi ...		400	400	400	88	100						
		Other oilseeds ...		5,600	5,100	5,500	75	66						
		Total ...		223,700	223,700	222,000	88	69						

1	2	3	4	5	6	7	8	9	10	11	12
Division.	District.	Total area of the district.	Total area estimated to be under cultivation.	Name of oilseed.	Approximate normal area under oilseeds.	Approximate area sown last year (1903-1904).	Estimated area sown this year (1904-1905).	Taking 100 to represent the normal outturn, how much represented the outturn last year (1903-1904)?	Taking 100 to represent the normal outturn, how much will represent this year's outturn (1904-1905)?	Remarks by District Officers.	Remarks by the Department of Land Records and Agriculture, Bengal.
		Acres.	Acres.		Acres.	Acres.	Acres.				
Bhagalpur.	Monghyr ...	2,510,080	1,582,800	Linseed	5,000	8,000	7,000	92	70	The crops suffered to some extent from insects, late rain and frost.	
				Rape and mustard	8,500	9,900	9,100	91	90		
				Til—Rabi	400	500	500	80	60		
				Other oilseeds ..	8,000	9,200	9,000	80	70		
				Total .	21,900	27,600	25,600	87	77		
	Bhagalpur	2,704,640	2,097,000	Linseed ...	14,100	17,900	14,100	85	75	Frost and unseasonable rainfall has caused some damage to the crops.	
				Rape and mustard	38,200	39,100	38,200	82	75		
				Til { Rabi ...	500	500	500	100	75		
				Til { Bhadoi ...	2,400	2,400	2,400	75	100		
				Other oilseeds	19,200	17,000	17,000	94	75		
				Total ..	74,400	76,900	72,200	85	76		
	Purnea ...	3,126,152	1,619,400	Linseed ...	12,700	12,200	12,200	100	78	Figures in columns 4, 6, 7 and 8 have been revised. The recent frost and rain have damaged the crops	
				Rape and mustard	158,500	165,000	178,000	100	80		
				Til—Rabi ..	100	100	100	100	100		
				Other oilseeds .	2,200	1,600	1,600	100	76		
				Total .	173,500	179,900	191,900	100	80		
	Malda ...	1,215,300	716,500	Linseed	10,200	7,500	7,000	100	90		
				Rape and mustard	60,000	51,500	52,500	100	90		
				Til—Rabi	7,000	6,000	5,000	100	90		
				Other oilseeds ...	2,500	2,300	2,000	100	90		
				Total ..	79,700	67,300	66,900	100	90		

	Sonthal Parganas.	3,500,800	1,545,300	Linseed	38,700	3,600	30,800	100	78	The decrease in the area and outturn is due to insufficient rain at the time of sowing and hailstorm and cloudy weather at maturity.
				Rape and mustard	108,800	108,800	98,400	100	81	
				Til—Bhadoi ...	5,500	5,500	5,500	100	87	
				Other oilseeds ...	78,100	77,400	66,400	97	70	
				Total ...	231,100	230,300	201,100	99	77	
Orissa.	Cuttack ...	2,338,560	1,161,200	Linseed	4,000	2,900	3,200	85	104	The deficiency of rainfall at the time of maturing somewhat reduced the outturn.
				Rape and mustard	13,600	15,500	14,000	81	100	
				Til { Rabi ...	2,500	1,000	1,000	70	101	
				Til { Bhadoi ...	2,700	1,100	700	70	101	
				Other oilseeds ...	13,000	15,000	10,000	84	90	
				Total ...	35,800	35,500	28,900	82	97	
	Balasore ...	1,334,368	933,200	Linseed	100	100	100	75	75	The decrease in the outturn is due to want of seasonable rain.
				Rape and mustard	6,600	6,900	6,900	85	80	
				Til { Rabi ...	600	500	500	95	100	
				Til { Bhadoi ...	1,500	600	700	95	100	
				Other oilseeds ...	500	2,400	2,300	100	100	
				Total ...	9,300	10,500	10,500	89	87	
	Angul ...	1,075,840	260,000	Rape and mustard	7,300	3,000	3,000	100	50	The decrease in the outturn is due to failure of seasonable rainfall.
				Til { Rabi	26,500	26,500	26,500	85	75	
				Til { Bhadoi ...	8,000	8,000	8,000	85	75	
				Other oilseeds ...	17,500	17,500	17,500	75	25	
				Total ...	59,300	55,000	55,000	83	58	
	Puri ...	1,599,360	750,200	Linseed ...	300	500	1,400	71	73	The low outturn is due to the want of seasonable rains at the time of sowing and excessive rains at the time of harvesting.
				Rape and mustard	5,800	1,000	1,300	70	74	
				Til { Rabi ..	400	400	200	65	54	
				Til { Bhadoi ...	400	800	100	70	54	
				Other oilseeds ...	1,500	4,000	6,100	95	75	
				Total ...	8,400	6,700	9,100	85	74	

1	2	3	4	5	6	7	8	9	10	11	12
DIVISION.	District.	Total area of the district.	Total area estimated to be under cultivation.	Name of oilseed.	Approximate normal area under oilseeds.	Approximate area sown last year (1903-1904).	Estimated area sown this year (1904-1905).	Taking 100 to represent the normal outturn, how much represented the outturn last year (1903-1904)?	Taking 100 to represent the normal outturn, how much will represent this year's outturn (1904-1905)?	Remarks by District Officers.	Remarks by the Department of Land Records and Agriculture, Bengal.
		Acres.	Acres.		Acres.	Acres.	Acres.				
CHOTA NAGPUR.	Hazaribagh ...	4,403,440	1,703,000	Linseed ...	13,800	6,600	12,700	85	71	The oilseed crops were damaged by heavy rain, hailstorm and frost.	
				Rape and mustard ...	23,500	23,400	20,900	90	70		
				Til—Rabi ...	27,700	27,700	27,700	88	75		
				Other oilseeds ...	54,000	51,400	51,100	96	77		
				Total ...	121,970	108,500	112,400	93	74		
	Ranchi ...	4,961,920	1,500,000	Rape and mustard	5,700	5,700	4,300	80	80	The decrease in the outturn is due to want of seasonable rains.	
				Til—Bhadoi ...	1,600	1,000	500	50			
				Other oilseeds ...	41,700	40,000	40,000	99			
				Total ...	49,400	46,700	44,800	80	80		
	Palamau ...	3,144,960	667,600	Linseed ...	16,000	20,000	14,000	98	98	The low outturn is attributed to the damage done to the crop by frost.	
				Rape and mustard	16,000	18,000	14,400	90	90		
				Til { Rabi	5,100	1,500	500	100	100		
				Til { Bhadoi	5,000	15,000	6,000	100	100		
				Other oilseeds ...	2,300	3,000	4,000	75	75		
				Total ...	42,400	55,500	38,900	94	94		
	Manbhum ...	3,654,069	1,418,300	Rape and mustard	33,700	33,800	25,800	86	86	The low outturn is due to want of timely rain as also to untimely heavy rain.	
				Til { Rabi	4,300	4,200	3,100	81	81		
				Til { Bhadoi	6,300	6,500	5,400	90	90		
				Other oilseeds ...	25,900	23,700	18,300	77	77		
				Total ...	70,200	68,200	53,100	88	88		

Singhbhum ...	2,490,240	840,700	Linseed	7,000	6,000	7,000	75	80
			Rape and mustard	20,000	20,000	20,000	100	
			Til { Rabi ...	3,500	3,500	3,500	80	
			Til { Bhadoi ...	6,500	6,500	6,500	80	
			Other oilseeds ...	31,000	31,000	31,000	100	
			Total ...	68,000	67,000	68,000	95	80
Bengal ...	100,989,174	53,696,500	Linseed	845,300	922,800	815,700	83	62
			Rape and mustard	2,153,200	1,973,900	1,961,200	84	83
			Til { Rabi ...	345,800	327,000	323,600	87	79
			Til { Bhadoi ...	98,800	101,300	90,600	86	78
			Other oilseeds ...	539,000	507,200	482,400	90	70
			Total ...	3,982,100	3,832,200	3,673,500	90*	76*

* As estimated by this Department.

APPENDIX II.

Abstract Statement of estimated acreage and outturn of the Oilseed Crops of Bengal for the year 1904-1905.

PROVINCE.	Name of crop.	ACREAGE.					OUTTURN IN TONS.					
		Of current year's crop (1904-1905).	Of previous year's crop (1903-1904).	Average of preceding years.		PERCENTAGE BY WHICH COLUMN 3 EXCEEDS (+) OR IS LESS THAN (—) AREA IN—	Estimated yield of current year, *i.e.*, of area in column 3 (1904-1905).	Yield of previous year, *i.e.*, of area in column 4 (1903-1904).	Average of preceding years.		PERCENTAGE BY WHICH COLUMN 8 EXCEEDS (+) OR IS LESS THAN (—) OUTTURN IN—	
				(a) Five years.	(b) Ten years.	Column 4.			(a) Five years.	(b) Ten years.	Column 9.	Column 10.
												(a) Five years. (b) Ten years.
1	2	3	4	5		6	7		8	9	10	11	12	
Bengal	Linseed ...	815,700	902,600	757,200	735,900	−11·61	+7·73	+12·37	111,500	168,800	135,100	−33·95	−17·47	−9·64
	Rape and mustard.	1,961,300	1,973,900	2,016,040	2,(90,3 0	−0·64	−2·72	−6 18	358,800	365,500	374,500	−1·83	−4·19	−1·27
	Til and other oilseeds.	896,600	936,500	982,100	1,118,000	−4·16	−8·71	−19 44	103,600	1:0,000	142,600	−29·31	−27·35	−23·39
	Total oilseeds	3,673,600	3,833,200	3,755,300	3,929,200	−4·14	−2·18	−6 51	573,900	664,300	652,200	−13·61	9·94	−8·09

FINAL FORECAST OF THE WHEAT CROP OF BENGAL, 1904-1905.

THE following note is published for general information.

R. W. CARLYLE,
Offg. Chief Secy. to the Govt. of Bengal.

he 15th May 1905.

DEPARTMENT OF LAND RECORDS AND AGRICULTURE, BENGAL.

Final forecast of the Wheat crop of Bengal, 1904-1905.

Preliminary.—Wheat is grown chiefly in the Bihar districts; also in Murshidabad, Nadia, Rajshahi, Rangpur, Pabna, Hazaribagh and Palamau.

2. *Character of the season.*—The conditions most favourable for the wheat crop are a moist condition of the soil in October and occasional light showers during the next three months. Dry cold is helpful, and the deltaic area of the Province is therefore unsuitable for this crop. The rainfall of October throughout the wheat districts was very favourable. Drought prevailed since then until January, when rainfall was again general. Nadia and Murshidabad received very little rainfall in October and scarcely any since then until February and March, when frost, hail and rain did considerable damage to the crop. The damage occurred chiefly in the Bihar districts where the bulk of the wheat crop is grown. On the whole the season was unfavourable to the wheat crop of the Province.

3. *Area sown.*—The normal area under wheat in these Provinces is at present estimated at 1,504,500 acres, while the area sown this year is returned at 1,455,500 acres, against 1,508,600 acres sown last year.

4. *Character of the crop.*—From Appendix I, in which the district returns have been summarised, it will be seen that only two districts, viz., 24-Parganas and Mymensingh, expect a 100 per cent. crop. In five districts, viz., Darjeeling, Pabna, Monghyr, Purnea and the Santhal Parganas, the estimates vary from 90 to 99 per cent.; in seven between 80 to 89 per cent.; in 12 between 70 to 79 and in three others between 60 to 69 per cent. Four districts anticipate a crop between 50 to 59 per cent., while Bankura, Nadia and Ranchi have each reported 48, 44 and 37 per cent. respectively. Since the publication of the preliminary forecast in February last prospects improved in two districts, remained

stationary in ten, and deteriorated in 24. The provincial outturn according to the present estimate of the District Officers amounts to 76 per cent. of a normal crop, against 90 which was their estimate in the preliminary forecast. The reduction is probably more than justified.

5. *Gross outturn.*—According to the estimates of the District Officers, the gross yield of wheat in the province will, this year, amounts to 144,100 tons, as compared with 527,800 tons of the past year.

6. *Food-stocks and the prices of food-grains.*—The harvests of the year are generally reported to be much below the normal and the prices of food-grains consequently ruled a little higher than usual. The estimated outturn of the three harvests, viz., *bhadoi*, winter rice and *rabi* crops, was 75, 86 and 75 per cent. respectively. The stock in hand, though not plentiful, is sufficient for the requirements of the province.

7. *Imports of wheat into Calcutta.*—From the statistics of the wheat trade quoted on the margin, it will be seen that there was during the year under report a considerable increase of imports of wheat into Calcutta from Bengal and Bihar.

Imports of wheat into Calcutta for the calendar year 1891 to 1904.

	Mds.		Mds.
1891	... 29,11,842	1898	... 9,58,771
1892	... 15,78,930	1899	... 21,77,546
1893	... 7,08,525	1900	... 12,10,787
1894	... 2,30,530	1901	... 16,32,898
1895	... 9,06,152	1902	... 8,18,018
1896	... 5,85,084	1903	... 6,84,885
1897	... 1,92,069	1904	... 23,18,074

N. D. BEATSON BELL,

Offg. Director of the Dept. of Land Records and Agriculture, Bengal.

CALCUTTA,

The 5th May 1905.

APPENDIX I.

Final Forecast of the Wheat Crop of Bengal, 1904-1905.

Division.	District.	Total area of district.	Total area estimated to be under cultivation.	Approximate normal area under wheat crop.	Approximate area under wheat last year (1903-1904).	Estimated area under wheat this year (1904-1905).	Taking 100 to represent the normal outturn, how much represented the outturn last year (1903-1904) ?	Taking 100 to represent the normal outturn, how much will represent this year's outturn (1904-1905) ?	Remarks by District Officers.	Remarks by the Department of Land Records and Agriculture, Bengal.
1	2	3	4	5	6	7	8	9	10	11
		Acres.	Acres.	Acres.	Acres.	Acres.				
Burdwan ...	Burdwan ...	1,720,960	1,234,240	1,500	2,100	1,800	96	69	The outturn is much below normal owing to untimely rainfall and the recent hailstorm.	
	Birbhum ...	1,121,280	776,300	5,000	5,000	5,000	80	50	Rains have caused much damage to the crop.	
	Bankura ...	1,677,440	642,800	5,500	5,100	5,000	79	48	The low outturn is due to the damage caused by the constant rainfall since middle of January 1905 till the harvesting time.	
	Midnapore ...	3,319,040	2,189,600	2,100	2,600	2,100	85	75	The outturn has been affected by the heavy cold weather rains.	
	Hooghly ...	1,058,640	488,900	160	100	100	60	75	.....	
									.....	
Presidency ...	24-Parganas ...	3,190,160	1,079,700	300	200	200	100	100		
	Nadia ...	1,787,520	1,043,800	23,100	22,900	29,500	60	44	The increase in area is due to favourable rain at the time of sowing. Rains in February and March have affected the outturn.	
	Murshidabad	1,371,520	985,500	130,000	105,700	90,200	66	54	The decrease in the outturn is due to frost.	
	Jessore ...	1,872,000	1,192,000	2,700	1,200	1,200	44	50	The decrease in the area sown and outturn as compared with the normal is due to gradual abandonment of the cultivation and to insufficient rainfall at the sowing season and the recent and untimely showers.	

Division.	District.	Total area of district.	Total area estimated to be under cultivation.	Approximate normal area under wheat crop.	Approximate area under wheat last year (1903-1904).	Estimated area under wheat this year (1904-1905).	Taking 100 to represent the normal outturn, how much represented the outturn last year (1903-1904)?	Taking 100 to represent the normal outturn, how much will represent this year's outturn (1904-1905)?	Remarks by District Officers.	Remarks by the Department of Land Records and Agriculture, Bengal.
1	2	3	4	5	6	7	8	9	10	11
		Acres.	Acres.	Acres.	Acres.	Acres.				
Rajshahi ...	Rajshahi ...	1,649,520	1,390,100	74,200	62,000	65,000	100	85	The low outturn is due to want of seasonable rain. The latter part of the season was particularly marked by insufficient rainfall.	
	Jalpaiguri ...	1,895,680	928,200	800	500	600	75	75	Wheat does not grow well in this district.	
	Darjeeling ...	744,960	160,600	5,000	5,000	5,000	100	92	The decrease in the outturn is due to the severe cold.	
	Rangpur ...	2,235,520	1,234,900	30,000	28,000	28,500	65	81	Rains in the latter part of October last, and hoar frost in February last, have affected the outturn.	
Dacca ...	Pabna ...	1,176,960	865,300	16,000	16,000	14,500	100	90	.....	
	Mymensingh	4,053,480	2,408,000	100	100	100	100	100	.....	
	Faridpur ...	1,459,840	1,132,600	2,000	2,000	2,000	100	75	.....	
Patna ...	Patna	1,328,000	1,082,000	125,000	129,400	131,300	104	67	The area in column 7 has been revised after enquiry. Hailstorm, frost and continuous unseasonable weather affected the crops, hence the decrease in the outturn.	
	Gaya	3,015,680	2,207,500	157,000	159,200	161,200	100	75	The decrease in the outturn is due to the bad weather that prevailed in February and the first half of March last.	
	Shahabad ..	3,798,720	1,841,800	122,000	120,200	122,000	85	75	The decrease in the outturn is due to the damage done by frost and hail.	
	Saran	1,711,360	1,357,200	89,400	89,400	93,000	100	75	The crop has been damaged by frost.	

Bhagalpur ...	Champaran ...	2,259,840	1,447,600	105,300	104,260	102,200	78	80	Hailstorm and frost in January did some damage to the crop, especially in the Bettiah subdivision.
	Muzaffarpur...	1,942,440	1,627,000	69,700	73,200	73,200	75	71	.....
	Darbhanga ...	2,142,620	1,678,000	53,700	67,800	64,400	86	75	The fall of frost in February last damaged the crop to a certain extent, hence the low outturn.
	Monghyr ...	2,518,080	1,552,200	108,000	100,000	100,000	95	90	Some damage was done by the late rains and unusually cold and cloudy season.
	Bhagalpur ...	2,704,640	2,097,000	297,200	226,100	202,200	75	85	Frost and unseasonable rain caused some damage to the crop.
	Purnea ...	3,196,153	1,619,400	24,000	23,000	23,300	80	93	The outturn on the whole is a fairly good one.
	Malda ...	1,215,360	716,500	60,000	76,400	70,000	100	85	Owing to frost and excessive cold at the time of growth of the plants, the outturn is below the normal.
	Santhal Parganas.	3,500,800	1,545,200	28,500	37,000	26,600	95	93	The decrease in area is due to want of rain at the time of sowing. Owing to hailstorm and cloudy weather the crop was much damaged, hence the low outturn.
Orissa ...	Cuttack ...	2,333,500	1,161,200	1,500	2,100	300	83	68	.....
	Balasore ...	1,334,368	870,800	400	100	100	75	75	.....
	Angul ...	1,075,840	260,000	100	100	100	25	75	.....
Chota Nagpur	Hazaribagh ...	4,493,440	1,765,000	16,700	16,500	15,500	84	62	The crop was damaged in some thanas by heavy rain, hailstorm and frost.
	Ranchi ...	4,561,920	1,506,000	600	600	600	75	37	The low outturn is partly due to want of moisture at the sowing time and partly to rain and frost at the time of maturity.
	Palamau ...	3,144,960	627,200	14,700	16,000	14,000	78	75	.....
	Manbhum ...	2,754,080	1,419,200	6,000	3,700	2,900	74	53	The low outturn is due to the damage caused by rain and hailstorm.
	Singhbhum ...	2,400,240	843,700	3,000	3,000	3,000	90	95	.....
	Total ...	60,703,577	44,926,500	1,504,700	1,598,600	1,455,500	90*	76	

*As estimated by this Department.

APPENDIX II.

Abstract statement of estimated acreage and outturn of the Wheat Crop of Bengal for the year 1904-1905.

PROVINCE.	ACREAGE							OUTTURN IN TONS.							REMARKS.
	Of current year's crop (1904-1905).	Of previous year's crop (1903-1904).	Average of preceding years.		Percentage by which column 2 exceeds (+) or is less than (—) area in			Estimated yield of current year, *i.e.*, of area in column 2 (1904-1905).	Yield of previous year, *i.e.*, of area in column 3 (1903-1904).	Average of preceding years.		Percentage by which column 7 exceeds (+) or is less than (—) outturn in			
					Column 5.	Column 6.						Column 8.	Column 9.		
1	2	3	4		5	6		7	8	9		10	11		12
			(a) Five years.	(b) Ten years.		(a) Five years.	(b) Ten years.			(a) Five years.	(b) Ten years.		(a) Five years.	(b) Ten years.	
Bengal	1,455,500	1,508,600	1,491,440	1,466,900	—3·52	—2·41	—0·77	444,100	527,800	515,600	484,900	—15·86	—13·90	—8·41	

RECOMMENDATION TO BE MADE BY THE DISTRICT BOARDS OF THE BHAGALPUR DIVISION FOR THE NOMINATION OF A MEMBER TO THE BENGAL LEGISLATIVE COUNCIL.

No. 880A.—D.

RESOLUTION.

APPOINTMENT DEPARTMENT.

Dated Darjeeling, the 15th May 1905.

THE seat in the Bengal Legislative Council of the Hon'ble Babu Kali Pada Ghose, who was nominated as the representative of the District Boards of the Chota Nagpur Division, will be vacant on the 31st July 1905. In accordance with the rotation prescribed in this Government's Resolution No. 1553J., dated the 25th March 1893, it is the turn of the District Boards of the Bhagalpur Division to recommend a person for nomination to the Council in order to fill the vacancy. The necessary notification will now be published in the *Calcutta Gazette*, specifying the District Boards of the Bhagalpur Division as the group of Boards on whose recommendation the Lieutenant-Governor will make a nomination to the seat. Each District Board will elect one representative only, and he will be entitled to exercise all the votes of the body which he represents.

2. The following statement shows the District Boards which will send delegates to vote for a person to be recommended for the vacant seat, and the number of votes assigned to them according to the scale shown in paragraph 5 of the Resolution of this Government No. 2307A., dated the 31st March 1897

The ordinary income taken is that for 1903-04:—

Division.	District Board.	Ordinary income.	Number of votes to be recorded by the representatives.
		Rs.	
Bhagalpur	Monghyr	... 2,50,245	5
	Bhagalpur	... 2,00,539	4
	Purnea	... 1,89,853	4
	Malda	... 74,374	1

3. Under Rule IV of the Regulations framed by the Governor-General in Council with the approval of the Secretary of State under section 1 (4) of the Indian Councils Act, 1892, for Bengal, the Lieutenant-Governor now desires that the Commissioner of the Bhagalpur Division will at once address the Chairmen of the District Boards enumerated in the above list, requesting them to convene a special meeting of their Board at which one member of the Board should be selected to represent them for the purpose of making the recommendation for the seat in Council. The name of the representative so selected must be reported at once by the Chairman to the Commissioner of the Division.

4. The period of three months laid down in Rule VII of the Regulations as that within which a recommendation shall be made to the Lieutenant-Governor will run from the date on which the Commissioner of the Division issues his request to the Chairmen of the District Boards.

5. As soon as the representatives have been selected, they will be called upon by the Commissioner of the Division to meet together on an early and convenient date, with special reference to the limit of time imposed by Rule VII of the Regulations, and at such convenient place as he may specify, for the purpose of electing, by a majority of votes, a person whom they will recommend to the Lieutenant-Governor to be nominated as a Member of the Council. The names of all candidates put forward at such meeting shall be duly proposed by one of the representatives present. The person elected must obtain a majority of the votes of the representatives present. If on the occasion of the first vote an absolute majority is not obtained, the name of the candidate who obtains the least number of votes shall be withdrawn from the election, and another vote shall then be held for the remaining candidates, and so on, until an absolute majority is obtained.

6. The electoral representatives present at this meeting shall elect one of themselves to be Chairman, and he shall preside and be responsible for the fair and proper conduct of the voting.

7. The Chairman of the meeting shall without delay report to the Commissioner of the Division the name of the person elected, with the number of votes obtained, and any other information which it may appear desirable to communicate, and on behalf of the meeting shall recommend to the Lieutenant-Governor the nomination to the Council of the person so elected. The Commissioner shall submit the report from the Chairman of the meeting, with any observations he may wish to add, to the Chief Secretary to Government, by whom the recommendation will be submitted to the Lieutenant-Governor.

8. Attention is drawn to the following Rule VI of the Regulations which have been framed by the Governor-General in Council with the approval of the Secretary of State:—

"VI.—It shall be a condition in the case of any person to be recommended by a Municipal Corporation, or group of Municipal Corporations, that he shall be a person resident within the Municipality or the district in which it is situated, or in some one of the Municipalities constituting the group or of the districts in which they are situated. A similar condition shall also apply to persons to be recommended by District Boards.

"*Explanation.*—A person is not 'resident' within the meaning of this rule unless he has a place of residence in the locality concerned, and such practical connection with that locality as qualifies him to represent the inhabitants thereof.

"If at any time the question is raised whether a person proposed for election is 'resident' within the meaning of this rule, the question shall be referred to, and decided by, the Local Government, whose decision shall be final."

Under this rule it is not necessary that the person recommended should be a member of any District Board concerned, but he must be resident within the Division from which the recommendation is made. Subject to this condition, the rules declare no limit of qualification, and it is left to the representatives to recommend a person under Rule V (*c*) according to the majority of their votes.

9. It is desirable that the subsidiary arrangements now sanctioned shall, as far as possible, be given effect to by the District Boards concerned with the minimum of official interference. The Divisional Commissioner and the District Magistrates will, of course, afford any assistance which may be required, and will do their utmost to facilitate the smooth working of the elections; but Government officers are forbidden to take part, directly or indirectly, in the election by canvassing, influencing votes, or otherwise interfering with the free choice of the District Boards. No indication should be given by any official member of any of the District Boards concerned as to the manner in which he himself intends to vote.

ORDERED that a copy of this Resolution be furnished to the Commissioner of the Bhagalpur Division for information and guidance, and for communication to the District Boards in his Division.

Ordered also that a copy be published in the *Calcutta Gazette*.

By order of the Lieutenant-Governor of Bengal,

R. W. CARLYLE,

Offg. Chief Secy. to the Govt. of Bengal.

WEATHER AND CROP REPORT.

For the week ending the 22nd May 1905.

Burdwan.—Rainfall nil. Early rice and jute being sown. Sugarcane being planted. Cattle-disease reported from Kalna. Fodder sufficient. Scarcity of water reported from Raniganj and Asansol thanas. Common rice sells as follows:—

	Srs.	ch.	
Sadar	13	12	per rupee.
Kalna	12	5	
Katwa	14	5	
Raniganj	14	8	

Birbhum.—Rainfall at Sadar 0·33, Rampur Hât 0·23. Weather seasonable. Transplantation of sugarcane and manuring continue. Fodder and water sufficient. Common rice sells as follows:—

	Srs.	ch.	
Sadar	14	4	per rupee.
Rampur Hât	15	0	

Bankura.—Rainfall nil, Weather hot. Ploughing continue. Early rice being sown. Fodder and water sufficient. No cattle-disease. Common rice sells as follows:—

	Srs.	ch.	
Sadar	15	0	per rupee.
Vishnupur	15	5	

Midnapore.—Rainfall nil. Early rice is being sown. Ploughing for winter rice continues. Summer rice being harvested. Sugarcane transplantation continues. Fodder and water sufficient. Cattle-disease in Dantan. Common rice sells as follows:—

	Srs.	ch.	
Sadar	15	0	per rupee.
Contai	18	0	
Tamluk	13	8	
Ghatal	14	0	

Hooghly.—Rainfall nil. Weather hot. Lands being ploughed for winter rice. Early rice and jute which are already in field, appear promising. No cattle-disease. Fodder and water sufficient. Common rice sells as follows:—

	Srs.	ch.	
Sadar	10	0	per rupee.
Serampore	11	3	
Arambagh	13	5	

Howrah.—Rainfall at Sadar nil. Weather hot, sowing of early and winter rice going on. Sugarcane thriving. Jute still being sown. No cattle-disease. Fodder sufficient. Common rice sells as follows:—

	Srs.	ch.	
Sadar	13	0	per rupee.
Uluberia	13	8	

24-Parganas.—No rain. Weather hot. Sowing of early rice and jute continues. Summer rice is being harvested in the Diamond Harbour sub-division. Prospects fair. Condition of cattle good. The supply of fodder and water sufficient. Common rice sells at 11¼ seers per rupee.

Nadia.—Rainfall at Sadar 0·03. Weather sultry. Sowing of paddy continues in Ranaghat. Planting of sugarcane and sowing of paddy nearly finished. Fodder and water sufficient. No cattle-disease reported. Common rice sells as follows:—

	Srs.	ch.	
Sadar	12	5	per rupee.
Kushtia	14	0	
Meherpur	11	7	
Chuadanga	12	8	
Ranaghat	13	0	

Murshidabad.—Rainfall at Jangipur 0·2. Weather hot. Early rice and jute are being weeded in Jangipur where winter rice lands are under cultivation. Early rice doing well in Lalbagh. Planting of sugarcane continues in Kandi, where prospects of summer paddy are favourable No cattle-disease. Fodder and water sufficient Common rice sells as follows:—

	Srs.	ch.	
Sadar	13	0	per rupee.
Kandi	14	0	
Jangipur	14	8	
Lalbagh	12	8	

Jessore.—Rainfall at Jhenida 0·05, Magura 0·03, Narail 0·11. Weather seasonable. Sowing going on. Fodder and water sufficient. Common rice sells as follows :—

	Srs.	ch.	
Sadar	15	0	per rupee.
Jhenida	13	0	
Magura	12	8	
Narail	13	5	
Bangaon	13	5	

Khulna.—Rainfall at Satkhira 0·20. Weather very hot. Sowing of autumn rice and jute estimated at 40 and 70 per cent. respectively State of summer rice favourable. No cattle-disease. Fodder and water sufficient. Common rice sells as follows :—

	Srs.	ch.	
Sadar	14	0	per rupee.
Bagerhat	16	0	
Satkhira	13	0	

Rajshahi.—No rain. Weather excessively hot. Much increased area of jute sown. Prospects of all crops good. No cattle-disease. Common rice sells as follows :—

	Srs.	ch.	
Sadar	14	0	per rupee.
Nator	13	8	
Naugaon	13	8	

Dinajpur.—Rainfall at Thakurgaon ·92. Weather seasonable. Sowing of jute and early rice nearly finished. Fodder and drinking-water sufficient. No cattle-disease. Common rice sells as follows :—

	Srs.	ch.	
Sadar	14	0	per rupee.
Balurghat	14	0	
Thakurgaon	12	8	

Jalpaiguri.—Rainfall at Sadar 1·83, Alipur Duars 7·88. Weather seasonable. Sowing of early rice finished. Jute being sown. Rain has done some damage to the seedlings. Lands are being ploughed for winter rice. Common rice sells at 13 seers per rupee. Fodder and water sufficient. No cattle-disease.

Darjeeling.—Rainfall at Sadar 2·25. Weather seasonable. *Hills*—Maize and potato doing well. *Marua* being sown. *Terai*—Ploughing going on for early rice. Sowing of jute in progress. Coarse rice sells as follows :—

	Srs.	ch.	
Hills	9	0	per rupee.
Terai	14	0	

Maize sells at Darjeeling and Kalimpong at 13 seers per rupee.

Rangpur.—Rainfall at Sadar ·25, Gaibanda ·14, Kurigram 3·70, Nilphamari 1·27. Weather hot. Weeding of jute and early rice going on. Common rice sells as follows :—

	Srs.	ch.	
Sadar	12	0	per rupee.
Gaibanda	12	0	
Kurigram	13	0	
Nilphamari	12	0	

Bogra.—No rain. Weather hot and occasionally cloudy. Sowing of early rice and jute continues and their weeding commenced in places. Fodder and water sufficient. No cattle-disease. Common rice sells at 14¼ seers per rupee.

Pabna.—Rainfall at Serajganj 0·45. Weather partially cloudy and getting hot. Prospects of standing crops fair. Sowing of paddy continues. No cattle-disease. Fodder and water sufficient. Common rice sells at 11¼ seers per rupee.

Dacca.—No rain, except in Munshiganj and Narainganj. Prospects of crops fair. Weather seasonable. Fodder available. No cattle-disease. Common rice sells as follows :—

	Srs.	ch.	
Sadar	14	0	per rupee.
Manikganj	12	0	
Munshiganj	13	0	
Narayanganj	13	0	

Mymensingh.—Rainfall at Sadar 0·56, Jamalpur 0·75, Kishorganj 0·3[illegible], Netrakona 0·03. Weather seasonable. Prospects of crops have been improved by recent dry weather. Jute and early rice suffered in some localities from excessive rain. They are being weeded. Fodder and water sufficient. Cattle-disease in Netrokona. Rice sells as follows:—

	Srs. ch.	
Sadar	13 0	per rupee.
Jamalpur	15 12	
Kishorganj	13 14	
Netrokona	17 0	
Tangail	Not reported.	

Faridpur.—Rainfall at Sadar nil, Goalundo 0·09, Madaripur 0·65. Weather very worm. Prospects of crops good. Fodder and water sufficient. Common rice sells at 12 seers per rupee.

Backergunge.—Rainfall at Patuakhali 2·10, Bhola 1·00. Weather fine and hot. Condition of *til* unfavourable. No cattle-disease. Fodder sufficient. Common rice sells at 13½ seers per rupee.

Tippera.—Rainfall at Brahmanbaria ·16, Chandpur ·55. Weather seasonable. Prospects fair. Sowing of paddy going on. Harvesting of *boro* nearly completed in Brahmanbaria. Fodder and water sufficient. No cattle-disease. Common rice sells as follows :—

	Srs. ch.	
Sadar	13 8	per rupee.
Brahmanbaria	14 8	
Chandpur	13 0	

Noakhali.—Rainfall at Feni 0·66. Weather hot and cloudy. Sowing of *aus* continues. Cessation of rain improving prospects. Cattle-disease reported. Fodder and water sufficient. Common rice sells as follows :—

	Srs. ch.	
Sadar	13 0	per rupee.
Feni	15 0	

Chittagong.—Rainfall at Sadar ·98, Cox's Bazar 3·62. Weather hot and cloudy. Ploughing for *aus* crop still continues. No cattle-disease. Common rice sells as follows:—

	Srs. ch.	
Sadar	13 8	per rupee.
Cox's Bazar	15 0	

Chittagong Hill Tracts.—Rainfall at Sadar 1·27. Weather cloudy and hot. *Jum* sowing continues. Common rice sells at 15 seers per rupee at Sadar.

Patna.—Rainfall nil. Weather seasonable. Threshing and winnowing of *rabi* going on. *Cheena* being harvested at places in Bihar subdivision. Sugarcane doing well. No cattle-disease. Fodder and water sufficient. Common rice sells as follows :—

	Srs. ch.	
Sadar	13 8	per rupee
Barh	13 0	
Bihar	13 0	
Dinapore	11 0	

Gaya.—Rainfall nil. Weather hot with west winds. Sugarcane and *cheena* progressing favourably. Fodder and water sufficient. Common rice sells at 12½ seers per rupee.

Shahabad.—Rainfall nil. Sugarcane doing well. Fodder and water sufficient. Common rice sells at 14 seers per rupee at Sadar.

Saran.—Rainfall nil. Weather hot. Threshing of *rabi* going on. Fields being prepared for *bhadoi*. Sugarcane and *cheena* doing well. No cattle-disease. Fodder and water sufficient. Common rice and maize sell at 13½ and 19 seers per rupee respectively at Sadar.

Champaran.—Rainfall nil. Weather very hot. Threshing of *rabi* nearly completed. Standing crops doing well. Fields being prepared for *aghani* paddy. No cattle-disease. Fodder and water sufficient. Common rice and maize sell at 13½ and 21 seers per rupee respectively at Sadar.

Muzaffarpur.—Rainfall nil. Weather seasonable. Prospects of crops good. *Rabi* being threshed. Fodder and water sufficient. No cattle-disease. Common rice and maize sell at 13 and 17 seers per rupee respectively at Sadar.

Darbhanga.—Rainfall nil. Weather hot. Preparation of land for *bhadoi* crops in progress. Standing crops doing well. Fodder and water sufficient. Cattle-disease reported from Singhia outpost. Common rice sells as follows :—

	Srs. ch.	
Sadar	14 12	per rupee.
Samastipur	14 0	
Madhubani	14 5	

Monghyr.—Rainfall nil. Weather seasonable. Threshing of *rabi* crops nearly finished. Lands being prepared for *bhadoi* crops. Sugarcane doing well. No cattle-disease Fodder and water sufficient. Common rice sells as follows:—

	Srs.	ch.	
Sadar	12	8	per rupee.
Begusarai	14	0	
Jamui	12	0	

Bhagalpur.—Rainfall at Banka 1·10. Weather generally hot. Fields are being ploughed for the next paddy crops. Sugarcane doing well. Cattle-disease reported from one village in Banka and two villages in Supaul subdivision. Fodder and water sufficient. Common rice sells as follows:—

	Srs.	ch.	
Sadar	15	0	per rupee.
Banka	15	0	
Madhipura	15	0	
Supaul	16	0	

Purnea.—Rainfall at Sadar nil, Kishanganj 0·40. Weather hot. Sowing of jute and *bhadoi* crops going on. Lands are being prepared for *aghani* paddy. No cattle-disease. Fodder and water sufficient. Common rice sells as follows:—

	Srs.	ch.	
Sadar	11	8	per rupee.
Kishanganj	11	0	
Araria	13	0	

Malda.—Rainfall nil. Weather hot. Sowing of *bhadoi* and jute finished. Lands are being prepared for winter rice. Harvesting of *boro*, wheat, barley and gram going on. Outturn being 90, 85, 70 and 80 per cent. respectively. No cattle-disease. Fodder and water sufficient. Common rice sells at 12 seers per rupee at Sadar.

Sonthal Parganas.—Rainfall at Sadar 0·06, Pakour 0·24, Rajmahal 0·55. Weather hot Extent of *bajra* and *mandua* sowing 20 per cent. Outturn of barley 99 and that of wheat 93 per cent. Sugarcane doing well. *Boro dhan* at Pakour partly damaged by rains. Fodder and water sufficient. Common rice sells at 13 seers per rupee at Sadar.

Cuttack.—Rainfall at Sadar 0·22. Fall general. Weather seasonable. *Dalua* and tobacco being harvested. Sugarcane growing. Condition of cattle generally good. Fodder and water sufficient. Common rice sells at $17\frac{1}{16}$ seers per rupee at Sadar.

Balasore.—Rainfall nil. Ploughing, planting of sugarcane and threshing of *dalua* continue. Condition of cattle good. Fodder and water sufficient. Common rice sells as follows:—

	Srs.	ch.	
Sadar	17	0	per rupee.
Bhadrak	20	0	

Angul.—Rainfall at Phulbani 2·31. Weather hot. Ploughing of lands going on. Cattle disease reported from the interior. Fodder and water available. Common rice sells as follows:—

	Srs.	ch.	
Sadar	18	0	per rupee.
Khondmals	18	0	

Puri.—Rainfall at Khurda 1·00. Weather seasonable. *Dalua*, castor and linseed being harvested. Cotton flowering. Sugarcane getting on well. Lands being ploughed and manured for ensuing paddy crops. Condition of miscellaneous crops good. Fodder and water sufficient. Common rice sells at $17\frac{1}{16}$ seers per rupee at Sadar.

Hazaribagh.—Rainfall at Giridih 0·04. Weather hot. No cattle-disease. Plou of lands in progress. Fodder and water sufficient. Common rice sells as follows:—

	Srs.	ch.	
Sadar	11	12	per rupee.
Giridih	12	0	

Mandua and Indian-corn sell at 20 and 15½ seers per rupee respectively at Sadar.

Ranchi.—Rainfall nil. Weather seasonable. Ploughing continues. Standing doing well. Cattle-disease reported from seven thanas. Fodder and water su Common rice sells as follows:—

	Srs.	ch.	
Sadar	12	0	per rupee.
Gumla	17	0	

Palamau.—No rain. Weather hot. Sugarcane and *tewa* paddy in good state. Cattle-disease in places. Fodder and water available. Common rice sells at 13 seers per rupee at Sadar.

Manbhum.—Rainfall at Gobindpur 0·65. Weather seasonable. Prospects of crops good. Outturn of *arhar* and *mahua* in Govindpur subdivision is estimated at 85 per cent. Fodder and water sufficient. Cattle-disease reported from thana Purulia. Common rice sells as follows:—

	Srs.	ch.	
Sadar	13	0	per rupee.
Gobindpur	12	0	

Singhbhum.—Rainfall 0·12. Prospects of standing crops good. Sowing of paddy commenced. Cattle-disease continues in thana Chakradharpur. Fodder and water sufficient. Common rice sells at 14 seers per rupee.

General Summary.—Rainfall during the week was generally light and scattered. Agricultural operations are proceeding. Prospects are favourable. Cattle-disease is reported from 11 districts. Fodder and water are generally sufficient. The price of common rice has risen in 9 districts and fallen in 6.

By order of the Lieutenant-Governor of Bengal,

R. W. CARLYLE,

Offg. Chief Secretary to the Govt. of Bengal.

REVENUE DEPARTMENT.

The 23rd May 1905.

GOVERNMENT OF BENGAL, IRRIGATION DEPARTMENT.

Approximate Return of Traffic on the Circular and Eastern Canals for the week ending Saturday, the 20th May 1905, as compared with the corresponding week of the previous year.

Nature of Cargo.	Week ending Saturday, the 20th May 1905.			Week ending Saturday, the 21st May 1904.		
	Number of boats.	Weight of cargo.	Tollage.	Number of boats.	Weight of cargo.	Tollage.
		Mds.	Rs.		Mds.	Rs.
Rice and paddy	541	97,731	1,474	500	79,742	1,133
... ...	1	200*	4	24	9,273†	96
Wood	56	46,415	700	61	54,078	800
Other articles	632	2,09,706	2,889	749	2,71,217	3,674
Total ...	1,230	3,54,052	5,067	1,334	4,14,310	5,603

* Weight by canal measurement = 250 maunds.
† Ditto ditto = 10,457½ „

No

Imports of Principal Articles into Calcutta by Rail

Whence imported	Food-grains								Fibrous products		Oilseeds	
	Rice and paddy			Wheat	Wheat flour	Gram and pulse	Other food-grains	Total	Jute, raw	Gunny bags†	Linseed	Mustard seed
	Rice	Paddy*	Total (in rice)									
Bengal	Mds	Mds	Mds	Mds	Mds	Mds	Mds	Mds	Mds	No	Mds	Mds
Burdwan	504,868	173,786	613,484	2,135	739	35,702	1,551	653,201	22,030	289,711	26,253	32
Birbhum	1,031,115	31,524	1,050,817	1,122	611	6,065	40	1,058,475	11	44,975	18,690	418
Bankura	2,646	.....	2,646	.....	.....	1	.....	2,647	.....	34,650	80	.....
Midnapore	1,316,203	24,339	1,338,515	3,921	45	16,919	38	1,354,438	38,860	289,644	20,527	1
Hooghly	901,287	138,749	961,805	31,417	138	60,776	571	1,074,409	718,337	11,953,985	47,862	13,49
24-Parganas	3,385,578	508,363	3,703,305	957	627	29,753	4,375	3,739,017	1,438,238	12,454,266	28,193	951
Nadia	49,596	2,080	50,896	124,314	2	1,146,109	4,853	1,326,174	821,786	254,345	558,075	7,93
Murshidabad	481,201	1,705	482,267	125,938	13	345,618	14,801	968,106	186,411	24,382	124,340	2,91
Jessore	26,330	28,344	45,954	67	.....	146,823	375	121,218	787,515	26,530	72,330	3,93
Khulna	52,990	317,729	251,571	.....	.....	24,090	.....	276,561	666,695	4,015	2,450	2,65
Rajshahi	11,355	10,161	17,706	2,963	.....	21,781	60	42,489	784,165	2,450	29,024	62
Dinajpur	89,078	63,467	128,745	.....	.....	1,021	258	130,024	201,153	1,184,760	.....	1,39
Jalpaiguri	155	150	240	.....	148	49	.....	446	472,887	670,330	1,348	817
Darjeeling	4	... ..	4	5	15,063	31,485	.....	46,559	86,356	302,240	.....	.....
Rangpur	6,178	935	6,762	187	.....	2,855	.....	9,804	1,764,065	403,025	4,763	2,367
Bogra	141,113	278,270	315,032	.....	.....	3,425	.....	318,457	399,960	52,010	2,060	1,05
Pabna	4,101	1,403	4,978	1,528	.....	3,394	20	9,920	1,904,722	71,886	18,417	2,33
Cooch Behar	15	.....	15	495	.....	.....	.....	510	189,713	1,155	.....	197
Dacca	7,461	1,519	8,410	818	.....	3,227	.....	12,455	3,348,711	108,470	14,567	1,09
Mymensingh	19,304	43,108	46,346	50	... ..	1,356	.....	47,632	1,508,199	18,655	12,480	23,08
Faridpur	82,607	2,638	84,253	10,511	638	106,238	896	202,890	4,123,354	83,370	120,007	8,91
Backergunge	4,045,979	7,769	4,060,733	.....	.....	6,971	.....	4,067,706	40,632	33,433	15,952	67
Tippera	41,792	1,176	42,527	.....	.....	.....	... ..	42,527	483,604	12,075	5,060	1,98
Noakhali	34,296	.....	34,296	.....	.....	250	.....	34,546	9,248	2,870	24,019	.....
Chittagong	1,036	2	1,037	.....	.....	36	.....	1,073	935	9,080	.....	.....
Total Bengal	12,238,197	1,636,812	13,254,954	306,767	15,415	1,894,940	27,333	15,499,396	19,989,947	28,333,692	1,157,361	83,71
Bihar												
Patna	1,507	2,061	2,795	431,677	.....	409,300	76,875	920,737	1,863	3,405	1,191,118	305,85
Gaya	1,258	.....	1,258	94,273	20	43,355	.....	138,906	.....	33,040	440,236	99,96
Shahabad	888	409	1,144	413,305	64	448,457	13,294	876,264	282	5,950	487,997	41,18
Saran	538	.....	538	5,008	.....	30,184	9,121	44,851	1,548	10,010	179,254	41,97
Champaran	355	1,336	1,190	21,813	.....	5,106	25,525	51,634	919	4,305	468,867	21,98
Muzaffarpur	97	... .	97	18,464	.....	134,062	27,380	170,003	2,619	165,835	545,656	54,18
Darbhanga	4,080	.....	4,080	3,675	.....	103,695	6,996	117,446	....	1,575	508,681	58,18
Monghyr	1,384	.....	1,384	505,370	8	415,971	14,148	939,981	3,658	9,205	321,762	227,40
Bhagalpur	16,233	.....	16,233	354,457	.....	247,046	288,448	906,183	25,332	13,687	460,321	233,00
Purnea	1,871	716	2,318	8,503	1	33,274	403	43,499	1,398,832	65,950	45,365	92,98
Malda	13,883	673	14,804	38,702	.....	23,527	3,339	79,872	97,852	1,810	49,923	1,26
Santhal Parganas	5,066	210	5,197	264,714	.....	262,068	95,683	630,662	45,547	11,725	169,108	294,15
Total Bihar	50,160	5,405	53,536	2,159,961	93	2,147,154	559,314	4,920,060	1,573,457	326,467	4,908,190	1,570,39
Orissa												
Cuttack	261,063	27,661	279,351	25	.....	68,280	4	346,660	3,435	3,465	363	.....
Balasore	986,394	320,073	1,186,340	1,225	.....	45,745	.....	1,233,310	70,987	19,022	6,016	347
Puri	265,300	11,594	275,890	.....	... ..	1,394	.....	276,984	.. ...	1,395	.....	.....
Mourbhanj State	1,144	.....	1,144	.....	.....	2	.....	1,146	.	...	... ..	... ..
Total Orissa	1,516,701	359,558	1,741,485	1,250	.....	115,421	4	1,858,700	74,423	23,782	6,384	347
Chota Nagpur												
Hazaribagh	.....	.....	.....	.....	331	36	.....	367	.....	535	3,669	1,49
Palamau	... ..	.....	.....	675	.....	41	82	798	... ..	1,470	33,403	42,97
Manbhum	123	.....	123	.....	40	.....	... ..	163	2,312	12,905	675	1,42
Singhbhum	42,554	160	42,654	.....	.....	530	23	43,207	.....	4,060	12,449	51
Total Chota Nagpur	42,677	160	42,777	675	371	607	105	44,535	2,312	20,050	50,196	46,42
Total from the Provinces under the Lieutenant-Governor of Bengal	13,847,735	1,991,935	15,092,694	2,469,243	15,879	4,158,122	586,755	22,322,693	21,640,109	28,703,981	6,122,128	1,700,56
Other Provinces and Places												
Burma	65,406	3,009	67,387	.....	1,032	32,775	.....	101,094	.....	53,800	.....	9
Assam	66,275	2,735	67,984	705	2	296	19	69,006	267,705	28,638	115	
U P of Agra and Oudh	4,099	30	4,116	12,915,545	53,072	2,139,617	703,800	15,872,052	59,344	20,300	3,087	7
Punjab	630	.....	630	31,414	41,383	204,093	43,070	320,590	.. ...	2,175	.....	2
Sind	..	... .	.....	.....	.....	.....	.....	.....	.....	.....	.....	.....
Central Provinces and Berar.	83,301	4	83,305	65,968	.....	119,762	3,231	241,307	11,771	5,005	5	
Bombay	177	.....	177	1	.....	4	4	186	... ..	500		
Madras	43,268	3,167	46,241	230	.....	16,619	1,555	63,035	16,028	54,650	47	
Rajputana and Central India	15	.....	15	15,960	.....	10,781	1,194	27,950	... ..	.....		
Nizam's Territory	5	.. ..	5	.....	.....	.....	.....	5	... ..	.....	.....	
Allepey	935	.	935	.....	.....	.....	.....	935	.....	.....	.....	
Port Blair	.....	.... .	.....	.... .	.....	.....	.....	.....	.....	16	.....	
Grand Total (1905)	14,061,843	2,000,882	15,322,392	15,499,356	116,966	6,753,009	1,338,628	39,012,353	21,034,872	28,866,239	9,49	
Grand Total (1904)	13,461,536	1,774,231	13,560,461	9,840,224	42,210	6,405,992	442,955	30,294,821	21,295,055	21,692,778	6,99	
Grand Total (1903)	12,466,158	2,022,498	13,759,718	4,705,422	50,171	6,134,531	1,142,402	25,792,239	21,702,336	17,701,598	4,47	

* One maund of paddy is equivalent to 25 seers of rice
† Including gunny cloth, 2 yards = 1 bag

I

Road, River, Canal, and Sea (coastwise) in the twelve months April 1904 to March 1905.

Tea, Indian	Cotton, raw	Silk, raw	Coal and coke	Indigo	Sugar		Tobacco		Whence imported
					Refined	Unrefined	Unmanufactured	Manufactured	
Mds	Mds	Mds	Mds	Mds	Mds	Mds	Mds	Mds	
									Bengal
2	156	.....	70,606,409	5	53	37	2,501	197	Burdwan
.....	453	670	.....	.....	.....	234	1,260	10	Birbhum
.....	73	.....	.....	.....	.....	2	85	316	Bankura
.....	1,896	601	74,156	14	8	34,041	1,671	828	Midnapore
.....	4,682	13	46,079	.....	2,555	97,825	67,781	13,435	Hooghly
.....	14,691	.....	99,610	.....	8,253	311,468	23,003	4,042	24-Parganas
1	5,136	13	13,200	34	102	23,341	24,061	42	Nadia
.....	237	6,585	.....	.....	84	775	359	3	Murshidabad
.....	2,151	.....	.....	.....	429	109,535	13,506	121	Jessore
.....	1,243	.....	.....	.....	350	33,677	721	.....	Khulna
.....	18	1,940	.....	.....	.....	3	1,805	.....	Rajshahi
.....	1,037	.....	.....	.....	14	141	103	.....	Dinajpur
335,497	2	.....	.....	.....	.....	.....	29,061	4	Jalpaiguri
142,150	.....	.....	.....	.....	.....	.....	1,176	1	Darjeeling
16,434	16,084	.....	.....	6	.....	83	265,313	.....	Rangpur
.....	6	.....	.....	.....	.....	.....	448	.....	Bogra
.....	.....	111	.....	.....	.....	.....	1,554	1	Pabna
1,516	3	.....	.....	.....	.....	.....	13,383	.....	Cooch Behar
206	29,011	38	.....	.....	2	2	.....	3	Dacca
.....	104	.....	.....	.....	.....	1	147	.....	Mymensingh
.....	2,136	.....	.....	9	.....	653	678	.....	Faridpur
.....	195	.....	.....	.....	.....	.....	50	.....	Backergunge
1	1,837	.....	.....	.....	.....	.....	76	.....	Tippera
.....	818	.....	.....	.....	.....	.....	.....	.....	Noakhali
10,000	44,635	.....	.....	.....	.....	.....	.....	.....	Chittagong
505,908	126,094	12,072	70,841,454	68	11,948	601,028	483,301	18,484	Total Bengal
									Bihar
.....	698	18	.....	99	351	18,232	19,893	6,573	Patna
3	389	.....	.....	3	22	13,539	.....	13,464	Gaya
.....	4	.....	.....	10	225	15,763	187	73	Shahabad
.....	752	.....	.....	3,547	.....	24,595	.....	129	Saran
.....	63	.....	.....	14,302	.....	2,129	.....	.....	Champaran
.....	107	.....	.....	7,998	2,319	3,038	10,211	.....	Muzaffarpur
139	46	.....	.....	3,285	267	2,501	35,806	2	Darbhanga
.....	647	.....	.....	644	188	2,227	2,653	295	Monghyr
.....	17	.....	.....	290	.....	1,362	1,095	19	Bhagalpur
1	117	.....	.....	1,711	.....	2	110,056	.....	Purnea
.....	.....	350	.....	.....	54	.....	20	280	Malda
.....	45	15	.....	573	.....	631	993	149	Sonthal Parganas
143	2,879	383	.....	32,461	3,405	83,859	181,019	20,894	Total Bihar
									Orissa
.....	194	.....	.....	.....	.....	52	5	1	Cuttack
2	192	.....	.....	22	.....	.....	1,416	.....	Balasore
.....	.....	.....	.....	.....	.....	.....	.....	.....	Puri
.....	.....	3	.....	.....	.....	.....	.....	.....	Mourbhanj State
2	386	3	.....	22	.....	52	1,421	1	Total Orissa
									Chota Nagpur
26	24	.....	3,202,762	.....	.....	63	5	.....	Hazaribagh
.....	.....	.....	298,461	.....	.....	.....	.....	.....	Palamau
3,163	.....	.....	46,767,065	.....	87	.....	39	.....	Manbhum
.....	86	.....	.....	.....	.....	.....	17	.....	Singhbhum
3,189	110	.....	50,268,288	.....	87	63	61	.....	Total Chota Nagpur
509,242	129,469	12,458	121,090,242	32,551	15,440	685,002	634,802	39,379	Total from the Provinces on the Lieutenant-Governor of Bengal
									Other Provinces and Places
4	26,306	.....	.....	.....	3	.....	320	736	Burma
1,510,425	13,123	654	72,850	.....	.....	18	397	8	Assam
1,358	431,946	.....	.....	5,630	2,662	17,946	1,414	439	U P of Agra and Oudh
2,438	121,994	.....	.....	64	.....	6,367	41	24	Punjab
.....	.....	.....	.....	.....	.....	3	.....	.....	Sind
2	153,156	.....	3	3	.....	87	54	26	Central Provinces and Berar
173	17,513	22	.....	.....	4,145	.....	400	551	Bombay
536	27,475	2	.....	.....	267,545	11,389	459	2,041	Madras
.....	26,685	.....	.....	.....	.....	.....	.....	.....	Rajputana and Central India
.....	.....	.....	.....	.....	.....	.....	.....	.....	Nizam's Territory
.....	.....	.....	.....	.....	.....	.....	.....	.....	Allepey
.....	.....	.....	.....	1	.....	.....	.....	.....	Port Blair
2,024,171	975,682	13,136	121,162,995	36,239	289,793	720,703	637,966	43,124	1905
1,983,663	817,477	17,583	74,368,201	53,401	345,838	654,185	559,796	32,663	1904 } Grand Total
1,912,943	807,849	16,390	59,003,583	35,337	189,853	744,117	512,105	41,398	1903

No II

Statement of the Routes by which the Articles enumerated in Table No I were imported into Calcutta in the twelve months April 1904 to March 1905

Routes	Food-grains						Fibrous products		Oilseeds	
	Rice	Paddy	Wheat	Wheat flour	Gram and pulse	Other food-grains	Jute, raw	Gunny-bags*	Linseed	Mustard seed
	Mds	Mds	Mds	Mds	Mds	Mds.	Mds	No	Mds	Mds
By boat	7,445,617	860,127	238,823	473	1,114,731	21,988	3,425,751	21,963,081	506,568	79,624
" river steamer ...	291,561	42,344	81,429	88	192,936	6,817	3,007,574	199,038	337,430	492,537
" rail — E. I. Railway	1,850,677	224,248	15,082,010	101,184	4,447,491	1,304,430	2,455,482	943,670	7,918,970	3,252,619
" rail — E. B. S. Railway	803,212	354,936	30,416	13,852	609,554	1,590	9,770,940	5,170,095	516,478	31,581
" rail — A.-B. Railway	11,555	2	.....	.....	38	.....	85,319	19,530	9,112	2,765
" rail — B.-N. Railway	1,659,997	157,329	65,655	6	192,787	2,314	16,839	109,795	85,973	34,058
" rail — B. C. Railway	51,839	189	67	.....	61,037	.....	1,999,744	33,075	37,485	4,054
" rail — Bombay Railway	.....	.....	.....	.....	5	.....	.....	.....	.....	.....
" rail — D.-S. Railway†	.....	.....	.....	.....	.....	.....	.....	245	.....	.....
" road	1,659,059	143,979	636	333	23,174	.....	1,088,871	320,160	8,449	.....
" sea	308,326	217,726	220	1,032	90,326	1,480	84,352	109,550	3,939	3,680
Total ... 1905 ...	14,081,842	2,000,880	15,499,256	116,938	6,732,009	1,338,628	21,934,872	28,868,239	9,424,404	3,900,918
Total ... 1904 ...	12,451,526	1,774,281	9,840,224	42,210	6,408,982	442,955	21,295,605	21,622,778	6,996,163	3,741,247
Total ... 1903 ...	12,458,158	2,082,488	4,705,423	50,171	6,134,531	1,142,402	21,702,336	17,701,598	4,470,001	4,008,657

Routes	Tea, Indian	Cotton, raw	Silk, raw	Coal and coke	Indigo	Sugar		Tobacco	
						Refined	Unrefined	Unmanufactured	Manufactured
	Mds	Mds	Mds	Mds	Mds	Mds	Mds	Mds	Mds
By boat	.....	12,541	44	80,436	6	11,159	298,482	102,362	8,318
" river steamer ...	1,137,378	48,199	4,096	85,854	.....	317	11,355	7,747	2,361
" rail — E. I. Railway	6,423	584,266	6,321	115,711,703	35,310	5,519	108,599	61,967	15,312
" rail — E. B. S. Railway	503,180	14,939	2,642	28,682	892	588	39,231	417,812	63
" rail — A.-B. Railway	154,265	5,779	.....	.....	.....	.....	16	.....	.....
" rail — B.-N. Railway	706	44,425	12	5,185,759	8	15,759	11,410	845	1,06[illegible]
" rail — B. C. Railway	.....	2,677	.....	.....	.....	.....	67,711	4,486	[illegible]16
" rail — Bombay Railway	.....	139,472	.....	.....	.....	.....	.....	56	.....
" rail — D.-S. Railway	211,450	.....	.....	.....	.....	.....	.....	.....	.....
" road	.....	9,509	.....	70,561	.....	530	183,899	41,059	1[illegible],026
" sea	10,769	113,875	21	.....	23	255,932	.....	1,632	[illegible],067
Total ... 1905 ...	2,024,171	975,682	13,136	121,162,995	36,239	289,793	720,703	637,966	4[illegible],224
Total ... 1904 ...	1,983,663	817,477	17,553	74,363,301	53,491	245,828	654,155	559,795	5[illegible],653
Total ... 1903 ...	1,912,943	897,849	16,390	89,003,553	35,337	189,833	744,117	512,105	4[illegible],285

* Including gunny cloth, 2 yards = 1 bag

† The comparative figures for 1903 in these tables do not include the trade between Calcutta and Assam, carried partly by river and partly by the Dibru-Sadiya Railway which was not registered in that year

No III

Imports of certain Articles into Calcutta by Sea (Foreign and Coastwise) in the twelve months April 1904 to March 1905

	Cotton piece-goods		Cotton yarn		Salt	Kerosene oil
	European	Indian	European	Indian		
	Rs	Rs	Mds	Mds	Mds	Mds
From Foreign Countries—						
United Kingdom	16,92,56,267	.....	84,710	.....	5,878,774	435
Other countries	21,90,523	.....	11,533	.....	5,293,363	2,665,019
Total ...	17,14,46,790	.....	96,243	.....	11,172,137	2,665,454
Coastwise—						
Bombay	95,548	56,13,173	55	133,173	568,564	.....
Sind	5,058	.	.....	.....	.....	.....
Madras	28,050	1,01,655	.....	15	30,354	.....
Other ports in Madras	.....	5,843	.....	.....	36,820	.....
Pondichery	18,899	.....	.....	.....	.....	.....
Burma	1,39,168	18,015	5	25	7	2,779,417
Other ports	.....	.....	.....	51	.....	.....
Total ...	2,86,723	57,38,686	60	133,264	633,745	2,779,417
Total ... 1905 ...	17,17,33,513	57,38,686	96,303	133,264	11,804,883	5,444,871
Total ... 1904 ...	14,47,98,052	48,21,119	84,191	135,240	10,799,064	4,491,267
Total ... 1903 ...	15,09,12,492	47,30,494	109,102	163,319	10,404,102	3,924,535

No. IV

Exports of Principal Articles from Calcutta by Sea (Coastwise and to Foreign countries) in the eleven months April 1904 to March 1905

	Rice	Paddy*	Total (in rice)	Wheat	Wheat flour	Gram and pulse	Other food-grains	Total	Jute, raw	Gunny-bags†
Coastwise—	Mds	Mds	Mds	Mds	Mds	Mds	Mds	Mds	Mds	No
Bombay	539,133	.....	539,133	120	.....	140	116	539,509	7	23,998,563
Sind	1,497	.....	1,497	.....	.....	.....	.....	1,497	.....	6,099,538
Mandvi	.....	.....	.....	.....	.....	.....	.....	.....	.....	.....
Madras	175,993	5,884	179,671	9,397	38,270	250,430	13,866	491,634	.....	3,144,620
Other ports in Madras ...	461,884	10,482	471,416	222	21,456	78,727	64	571,885	19	3,829,610
Pondichery ...	.....	.....	.....	33	4,017	4,594	.....	8,644	.....	731,050
Kattywar ...	.....	.....	.....	.....	.....	.....	.....	.....	.....	.....
Goa	.....	.....	.....	.....	.....	.....	.....	.....	.....	.....
Allepey	5,272	.....	5,272	.....	.....	502	.....	5,774	63	73,250
Burma	53,736	.....	53,736	5,067	297,680	276,500	32,080	654,063	544	33,602,809
Other Indian ports	426	.....	426	479	13,959	19,884	37	34,815	16	1,197,718
Total ...	1,239,941	16,336	1,250,151	15,318	365,412	630,777	46,143	2,307,801	649	71,972,149
To Foreign countries—										
United Kingdom	864,823	12	864,940	7,437,161	63,172	1,852,481	607,648	10,914,402	5,739,369	34,511,103
Other countries	8,476,410	23,087	8,499,848	4,331,931	123,445	950,550	753,119	14,649,893	10,076,140	452,905,400
Total ...	9,341,333	23,099	9,364,788	11,769,092	186,617	2,803,031	1,450,767	25,564,295	15,815,518	487,416,502
Total ... 1905 ...	10,581,293	39,435	10,605,939	11,784,410	551,029	3,433,808	1,496,910	27,272,096	15,816,167	559,388,651
Total ... 1904 ...	8,608,466	29,425	8,636,231	8,007,415	415,415	3,421,127	493,080	13,363,268	16,970,066	543,003,534
Total ... 1903 ...	8,447,692	24,931	8,463,273	1,490,524	293,045	3,100,478	1,135,725	14,480,045	16,662,040	538,167,994

	Linseed	Mustard seed	Tea, Indian	Cotton, raw	Silk, raw	Coal and coke	Indigo	Sugar		Tobacco	
								Refined	Unrefined	Unmanufactured	Manufactured
Coastwise—	Mds	Mds	Mds	Mds	Mds	Mds	Mds	Mds	Mds	Mds	Mds
Bombay	.....	.....	57,919	133	13	28,379,879	516	4,450	.....	64	301
Sind*	.....	.....	688	.....	.....	7,784,603	.....	681	.....	.....	4
Mandvi	.....	.....	.....	.....	.....	.....	.....	.....	.....	105	.....
Madras	.....	548	1,071	.....	106	5,671,723	37	1,005	1,207	.....	107
Other ports in Madras ...	.....	14,379	141	.....	.....	3,026,151	.....	795	2,472	.....	1,164
Pondichery ...	.....	.....	.....	.....	.....	238,984	.....	.....	.....	.....	.....
Kattywar ..	.....	.....	23	.....	.....	275,490	.....	.....	.....	.....	...
Goa	.....	.....	.....	.....	.....	1,027,938	.....	.....	.....	.....	.....
Allepey ...	.....	.....	.....	.....	.....	163	.....	.....	.....	.....	5
Burma	15	46	4,615	3,225	134	8,211,692	1	11,405	17,051	210,958	4,797
Other Indian ports	.....	.....	4	27	.....	273,638	.....	26,207	2,508	5,430	597
Total ...	15	14,975	64,866	3,385	253	46,900,240	554	45,443	23,838	216,557	6,977
To Foreign countries—											
United Kingdom	5,258,562	128,858	1,486,226	7,044	3,553	1,279	13,646	1,371	.....	.....	254
Other countries	4,218,788	836,320	455,838	390,184	7,367	16,153,395	27,227	288	645	33,199	2,696
Total ..	9,477,350	965,178	1,944,064	397,228	10,919	16,154,674	40,873	1,644	645	33,199	2,950
Total ... 1905 ..	9,477,365	980,150	2,008,730	400,613	11,172	63,054,914	41,427	47,087	24,483	249,756	9,927
Total ... 1904 ...	7,417,686	1,117,603	2,061,630	357,547	15,494	54,682,421	40,868	59,563	23,603	174,131	8,830
Total ... 1903 ...	5,657,984	1,330,147	1,883,513	413,986	16,805	48,000,103	40,230	52,219	20,841	232,059	8,178

* One maund of paddy is equivalent to 25 seers of rice
† Including gunny-cloth, 2 yards = bag

No V

Exports of certain Articles from Calcutta by Rail, Road, River, Canal, and Sea (Coastwise) in the twelve months April 1904 to March 1905.

	Cotton piece-goods*		Cotton yarn		Salt	Kerosene oil		Gunny-bags‡
	European	Indian	European	Indian		From Calcutta	From Hudge-Budge†	
Bengal	Rs	Rs	Mds	Mds	Mds	Mds	Mds	No
Burdwan	27,38,543	19,921	2,925	13,248	407,481	7,110	113,989	533,390
Birbhum	16,26,728	53,325	1,483	14,076	210,694	574	40,570	726,665
Bankura	6,54,129	1,406	.....	6,726	67,129	45	5,878	80,092
Midnapore	22,41,097	14,606	8,589	12,717	504,819	1,887	23,342	315,770
Hooghly	13,69,273	26,851	2,443	472	198,747	70,760	14,376	443,720
24-Parganas	32,09,045	2,24,586	6,719	530	525,701	134,796	32,134	453,898
Calcutta	.....	.....	.....	.....	.....	.....	926,002	.....
Nadia	32,05,891	14,543	15,026	1,121	275,687	11,875	128,820	676,837
Murshidabad	15,06,360	20,807	1,045	2,409	123,012	1,576	44,551	325,974
Jessore	13,88,106	.....	8,242	71	171,866	47,396	23,485	100,970
Khulna	8,66,316	.....	1,734	158	86,730	28,010	1,646	34,020
Rajshahi	21,96,022	3,760	2,679	421	178,707	4,777	36,041	115,907
Dinajpur	14,57,426	23,570	305	3,817	163,524	480	24,050	223,180
Jalpaiguri	15,20,658	23,628	1,138	2,771	124,008	1,480	48,740	62,790
Darjeeling	14,84,533	5,556	114	4,771	77,675	1,891	42,224	64,155
Rangpur	47,34,897	18,067	3,144	4,937	320,294	1,598	67,265	134,955
Bogra	27,07,704	3,313	2,764	1,246	152,626	406	38,678	367,150
Pabna	26,38,045	821	9,430	3,452	316,956	5,089	299,160	97,340
Cooch Behar	10,54,768	6,892	139	660	47,208	582	4,822	10,430
Dacca	30,99,284	6,978	30,655	1,131	655,159	10,293	356,372	139,870
Mymensingh	39,01,102	3,147	2,639	2,173	313,599	5,766	112,676	65,660
Faridpur	27,08,475	63,337	18,482	1,851	334,636	130,962	77,370	137,540
Backergunge	38,58,408	.....	20,726	128	385,984	100,784	85,488	269,470
Tippera	25,79,359	74	14,177	166	183,817	1,370	25,690	215,220
Noakhali	10,80,622	.....	6,716	.....	18,010	1,247	.....	24,995
Chittagong	16,71,601	5,156	6,582	23	357	1,141	1,309	811,178
Total Bengal	6,19,34,904	5,40,342	167,175	78,134	5,783,171	580,894	2,575,164	6,425,181
Bihar								
Patna	28,95,883	26,810	2,644	8,843	279,318	352	110,330	2,193,805
Gaya	26,29,549	32,506	169	23,799	223,026	133	49,453	654,165
Shahabad	33,15,917	18,203	267	8,749	210,299	191	26,888	911,295
Saran	33,64,965	9,706	786	2,351	194,139	198	39,032	386,400
Champaran	44,36,784	34,709	56	5,624	218,840	785	60,085	433,695
Muzaffarpur	43,56,345	72,230	.....	3,728	303,540	449	103,021	672,280
Darbhanga	52,60,782	36,709	34	11,515	344,716	529	113,142	699,230
Monghyr	26,37,978	10,524	112	11,204	332,829	1,439	74,030	1,814,935
Bhagalpur	53,88,162	92,161	652	9,497	358,065	254	88,800	1,486,530
Purnea	33,95,878	41,833	746	10,905	279,700	1,544	74,375	219,300
Malda	15,98,975	6,114	2,373	4,121	71,486	223	3,821	141,765
Santhal Parganas	22,09,309	11,990	1,364	13,978	288,354	3,323	113,195	1,027,215
Total Bihar	4,15,86,227	3,93,585	9,186	114,312	2,909,013	9,423	849,340	10,389,615
Orissa								
Cuttack	10,06,213	57,219	27	25,374	516	340	27,204	604,450
Balasore	6,49,731	2,751	4,817	42,540	203,567	558	36,403	930,334
Puri	1,80,008	6,328	.....	154	9	131	1,660	228,000
Mourbhanj State	3,032	.....	.....	.....	.....	.....	.....	690
Total Orissa	19,29,274	66,298	4,844	68,077	203,304	931	65,317	1,763,474
Chota Nagpur								
Hazaribagh	7,12,434	1,237	54	4,971	90,966	262	16,130	18,630
Palamau	6,20,035	637	28	508	60,481	330	4,465	96,075
Manbhum	23,62,666	45,918	131	11,607	309,643	2,773	48,340	91,525
Singhbhum	5,48,345	5,101	7	731	28,090	391	4,590	154,310
Total Chota Nagpur	42,49,470	51,993	220	17,817	499,179	3,761	73,571	360,540
Total Exports to the Provinces under the Lieutenant-Governor of Bengal	10,97,00,135	10,52,208	181,425	278,340	9,474,755	594,909	3,563,392	18,938,910
Other Provinces and Places								
Burma	11,29,909	33,405	7,557	30,407	68	.....	1,220	33,607,800
Assam	97,97,118	7,198	18,599	8,705	564,760	13,043	147,919	673,020
U P of Agra and Oudh	3,80,23,209	3,20,432	12,670	3,852	534,024	3,155	725,147	16,963,365
Panjab	22,82,318	1,76,666	4,320	316	148	190	71,766	10,492,345
Sind	12,783	.....	.....	.....	.....	.....	101,527	6,101,888
Central Provinces and Berar	13,45,826	36,020	97	1,639	2,189	1,203	96,823	4,310,425
Bombay	1,21,928	7,732	32	108	.....	.....	165,895	25,630,588
Madras	10,24,825	27,745	252	9,620	657	1,062	449,844	8,000,300
Rajputana and Central India	13,02,114	4,244	638	64	.....	1,251	23,167	674,750
Nizam's Territory	35,525	611	.....	.....	.....	.....	.....	372,293
Mysore	491	.....	.....	.....	.....	.....	.....	21,420
Alleppy	.....	150	.....	.....	.....	.....	11,480	73,250
Pondicherry	25,576	.....	.....	.....	.....	.....	.....	731,980
Nicobar	.....	.....	.....	.....	.....	.....	6	.....
Port Blair	29,025	480	.....	177	.....	.....	402	275
Grand Total 1905	16,98,86,732	16,66,581	225,590	330,583	10,377,200	616,162	5,338,788	134,511,244
Grand Total 1904	13,88,84,329	9,19,730	199,567	338,961	8,643,928	587,930	3,849,780	100,131,844
Grand Total 1903	13,40,01,826	8,55,137	209,386	301,125	8,691,481	497,119	4,133,436	97,090,047

* The value rates are fixed quarterly and the monthly valuation is made at the value rates of the preceding quarter

† Represents the trade registered at the traffic-registering stations only

‡ Including gunny cloth, 2 yards = 1 bag

No VI

Statement of the Routes by which the Articles enumerated in Table No V were exported from Calcutta in the twelve months April 1904 to March 1905

	Cotton piece-goods*		Cotton yarn		Salt	Kerosene Oil		Gunny-bags†
	European	Indian	European	Indian		From Calcutta	From Budge-Budge	
	Rs	Rs	Mds	Mds	Mds	Mds	Mds	No
By boat ...	18,83,073	40,667	7,039	344	1,909,035	378,121	50,030	733,867
,, river steamer ...	2,55,03,565	13,523	91,622	2,060	2,117,882	16,778	997,366	1,209,019
,, rail — E. I. Railway ...	8,71,66,290	9,56,089	17,472	149,696	3,898,713	22,391	1,926,563	30,860,480
,, rail — E. B. S. Railway ...	3,35,03,841	1,83,479	58,269	40,298	1,527,549	23,973	1,479,875	2,529,380
,, rail — A.-B. Railway ...	47,51,152	.....	19,351	856	109,418	5,614	3,161	85,085
,, rail — B.-N Railway ...	63,34,484	1,43,255	96	78,861	568,678	4,334	107,255	5,005,420
,, rail — B. C. Railway ...	25,24,654	.....	10,471	.....	94,031	22,539	.....	82,950
,, rail — N.-W. Railway ...	11,02,541	1,288	1,280	12	.....	82	.....	7,573,033
,, rail — Bombay Railway ...	20,07,528	63,872	685	1,090	657	491	.....	4,394,940
,, rail — D. S. Railway‡ ...	35,584	.....	18	10	247	311	408	23,645
,, road ...	31,25,363	2,18,827	6,522	.....	60,047	141,528	.....	42,266
,, sea ...	18,98,747	45,851	12,765	86,326	90,967	.....	704,130	71,972,149
Total ... 1905 ...	16,98,36,722	16,66,881	225,590	329,553	10,377,209	616,163	5,358,788	124,511,244
Total ... 1904 ...	13,83,84,329	9,18,739	196,557	338,261	8,643,928	537,929	3,849,760	100,131,844
Total ... 1903 ...	13,80,01,528	8,55,137	209,386	301,135	8,691,481	497,119	4,133,436	97,090,947

* The value rates are fixed quarterly and the monthly valuation is made at the value rates of the preceding quarter

† Including gunny-cloth, 2 yards = 1 bag

‡ The comparative figures for 1903 in these tables do not include the trade between Calcutta and Assam carried partly by river and partly by the Dibru-Sadiya Railway which was not registered in that year

May 23, 1905.

J. A. Robertson,
Director-General of Statistics

H. W. C. Carnduff,
Offg. Secretary to the Government of

Division.	Districts.	Population under registration.	Number registered.	Ratio per 1,000 of population per annum.	DEATHS. Cholera. Number registered.	Cholera. Ratio per 1,000 of population per annum.	Small-pox. Number registered.	Small-pox. Ratio per 1,000 of population per annum.	Plague. Number registered.	Plague. Ratio per 1,000 of population per annum.	Fever. Number registered.	Fever. Ratio per 1,000 of population per annum.	Dysentery and Diarrhœa. Number registered.	Dysentery and Diarrhœa. Ratio per 1,000 of population per annum.	Respiratory diseases. Number registered.	Respiratory diseases. Ratio per 1,000 of population per annum.	Injury. Number registered.	Injury. Ratio per 1,000 of population per annum.	Other causes. Number registered.	Other causes. Ratio per 1,000 of population per annum.	Total of all causes. Number registered.	Total of all causes. Ratio per 1,000 of population per annum.	Average of corresponding month of previous five years. Number registered.	Average of corresponding month of previous five years. Ratio per 1,000 of population per annum.	Remarks.
1	2	3	4	5	6	7	8	9	10	11	12	13	14	15	16	17	18	19	20	21	22	23	24	25	26
Burdwan	Burdwan	1,532,475	4,917	38·40	285	2·16	12	·08	2	·01	2,784	21·60	81	·60	7	·04	26	·19	724	5·64	3,901	30·48	3,667	27·84	
	Birbhum	902,280	2,908	38·64	141	1·80	6	·07	...	...	1,307	18·60	7	·08	15	·19	29	·24	356	4·68	1,941	25·80	1,692	22·44	
	Bankura	1,116,411	3,602	39·36	78	·72	27	·24	...	...	1,725	18·48	37	·36	...	...	8	·08	748	8·04	2,623	28·08	2,311	24·84	
	Midnapore	2,789,114	9,137	39·24	990	4·20	58	·24	1	·003	5,324	22·80	131	·48	9	·03	20	·08	1,928	8·28	8,461	36·36	8,911	38·28	
	Hooghly, including Serampore.	1,049,282	3,566	40·68	127	1·44	...	...	18	·12	1,917	21·84	179	2·04	36	·36	14	·12	565	6·36	2,856	32·64	3,219	36·72	
	Howrah	850,514	2,859	40·68	382	5·82	3	·03	70	·96	803	11·28	310	4·32	62	·84	28	·36	633	8·76	2,291	32·16	2,501	35·28	
	24-Parganas	2,079,359	5,941	34·20	1,155	6·60	3	·01	32	·12	3,085	17·76	136	·79	80	·12	59	·24	704	4·32	5,273	30·36	5,378	30·96	
	Calcutta	847,796	1,289	17·88	105	1·44	18	·24	443	6·24	383	5·04	263	3·72	332	4·68	41	·48	847	11·88	2,412	34·08	2,885	40·80	
	Nadia	1,667,491	5,655	40·68	114	·72	7	·04	3	·01	3,659	26·28	7	·06	7	·04	23	·12	739	5·28	4,360	32·76	4,198	30·12	
	Murshidabad	1,833,184	4,651	41·76	318	2·76	32	·24	...	...	4,852	32·04	16	·09	3	·01	11	·09	459	4·08	3,586	32·16	3,129	28·08	
	Jessore	1,813,155	5,442	36·00	174	1·08	...	...	...	...	4,752	24·72	13	·09	...	...	15	·09	606	3·96	5,667	37·44	5,140	33·96	
	Khulna	1,253,043	4,722	45·12	126	1·20	...	...	...	...	1,703	16·20	13	·12	...	...	18	·12	924	7·80	2,686	25·68	2,748	26·28	
	Rajshahi	1,462,407	5,702	46·68	37	·24	...	...	...	...	3,394	31·92	6	·04	4	·03	43	·24	390	3·12	4,373	35·88	3,882	31·80	
	Dinajpur	1,567,080	7,920	60·60	3	·01	12	·08	...	...	4,744	36·24	2	·01	2	·01	15	·10	444	3·36	5,221	39·96	4,882	37·32	
	Jalpaiguri	787,380	2,382	36·24	...	...	2	·02	...	...	1,681	25·56	22	·24	...	...	6	·08	81	·96	1,773	27·00	1,812	27·60	
	Darjeeling	249,117	722	34·68	...	...	1	·04	...	...	586	24·36	23	1·08	...	...	15	·72	107	5·04	652	31·32	618	29·64	
	Rangpur	2,154,181	9,037	50·28	6	·02	6	·02	...	...	5,687	28·39	4	·01	2	·01	15	·12	206	2·88	1,937	27·12	1,907	26·76	
	Bogra	854,533	3,825	53·64	4	·04	6	·08	...	...	1,702	25·88	4	·04	...	...	13	·12	222	1·80	4,222	35·64	3,338	28·08	
	Pabna	1,426,461	3,892	32·76	22	·12	4	·02	...	...	3,949	33·36	7	·04	3	·02	20	·08	1,204	5·40	5,761	26·04	6,133	27·72	
	Dacca	2,644,435	9,664	43·80	207	·84	141	·60	...	...	4,030	18·24	143	·60	16	·07	22	·06	1,485	4·44	7,755	23·76	7,360	22·44	
	Mymensingh	3,915,668	13,373	40·92	311	·84	28	·08	...	...	5,867	17·88	37	·10	5	·01	20	·12	876	5·28	4,820	29·76	5,051	31·08	
	Faridpur	1,942,733	6,896	42·48	57	·24	1	·006	...	...	3,840	23·64	26	·12	8	·03	49	·24	1,983	10·32	5,222	27·24	5,269	30·96	
	Backergunge	2,291,759	9,854	51·48	172	·84	8	·03	...	...	2,968	15·48	34	·12	...	...	26	·12	886	4·92	4,410	24·56	4,601	26·04	
	Tippera	2,117,991	7,768	44·16	207	1·08	...	...	...	...	3,251	18·36	40	·12	...	...	23	·24	553	5·76	2,456	26·16	3,176	33·36	
	Noakhali	1,141,728	4,565	52·44	26	·24	2	·01	...	...	1,8 0	19·80	5	·04	...	...	20	·12	199	1·68	3,459	39·60	3,136	27·72	
Chittagong	Chittagong	1,353,250	4,439	39·36	71	·60	7	·06	...	...	3,136	27·72	24	·12	2	·01									Not under registration.
	Chittagong Hill Tracts																								
Patna	Patna	1,624,985	5,503	40·56	9	·04	12	·08	4,617	34·08	1,660	12·24	309	2·28	195	1·44	72	·48	1,387	10·20	8,261	60·96	7,379	54·48	
	Gaya	2,859,833	7,302	45·96	8	·03	3	·01	3,277	19·08	3,753	21·84	33	·12	18	·09	52	·24	811	4·68	8,001	46·56	8,235	28·08	
	Shahabad	1,962,696	7,014	42·84	...	...	3	·01	3,556	21·72	3,754	22·92	7	·03	3	·01	52	·24	1,097	6·60	8,473	51·72	7,237	36·00	
	Saran	2,400,609	9,399	46·80	...	...	7	·02	6,702	33·36	2,919	14·40	253	1·20	64	·24	65	·24	2,846	14·16	13,846	63·96	8,153	20·88	
	Champaran	1,790,463	5,801	36·72	...	...	7	·03	1	·006	2,132	14·28	1	·006	1	·006	36	·12	1,148	4·80	6,909	26·16	4,889	21·24	
	Muzaffarpur	2,754,780	9,449	41·16	...	...	19	·07	665	2·88	4,137	18·00	42	·12	2	·008	30	·12	1,672	4·32	5,928	24·36	5,349	21·96	
	Darbhanga	2,912,611	9,063	37·32	...	...	27	·10	486	1·92	4,266	17·52	57	·12	...	...	57	·24	1,795	10·32	7,040	40·80	4,147	24·12	
	Monghyr	2,068,804	7,576	45·92	10	·04	26	·12	2,182	12·60	2,949	17·04	11	·06	3	·01	40	·12	599	3·36	4,776	27·36	3,551	20·28	
	Bhagalpur	2,088,963	6,066	34·80	1	·004	23	·12	796	4·56	3,363	18·96	11	·006	...	...	13	·07	225	1·44	5,554	33·60	4,769	30·48	
	Purnea	1,874,794	7,000	44·76	...	...	59	·36	...	...	4,856	31·68	1	·03	...	...	6	·07	310	4·20	1,859	25·20	1,856	25·08	
	Malda	554,130	3,486	47·28	1	·01	1	·01	...	...	1,539	20·88	2	·12	...	...	18	·10	370	2·40	3,140	20·76	2,351	15·48	
	Sonthal Parganas	1,809,737	5,083	33·60	21	·12	4	·02	1	·006	2,705	17·88	21	·12	...	...	51	·24	2,495	14·40	5,863	34·20	6,022	34·92	
Orissa	Cuttack	2,062,755	6,805	38·40	327	1·80	19	·10	...	...	2,363	13·68	554	3·12	74	·36	28	·24	1,562	17·40	3,350	37·44	3,141	35·16	
	Balasore	1,071,197	3,788	42·36	324	3·60	2	·01	...	...	1,275	14·28	159	1·68	...	...	28	·24	1,421	16·68	3,315	39·00	2,788	32·88	
	Puri	1,017,254	3,280	38·64	383	4·44	163	1·92	...	...	821	9·60	365	4·08	126	1·44	47	·48	1,421	16·68	3,315	39·00			Not under registration.
	Angul and Khondmals																								
Chota Nagpur.	Hazaribagh	1,177,961	4,521	45·96	...	...	2	·01	62	·60	1,843	18·72	5	·04	1	·009	59	·60	584	5·64	2,536	25·80	1,848	18·72	
	Ranchi	1,187,925	4,036	40·68	...	...	...	...	...	...	1,468	14·76	64	·60	1	·009	36	·36	713	7·20	2,280	22·92	1,953	19·68	
	Palamau	619,600	2,619	50·64	...	...	...	...	1	·01	1,056	20·40	8	·12	10	·12	32	·60	319	6·12	1,486	27·60	1,231	23·76	
	Manbhum	1,301,364	3,257	30·00	301	2·76	...	...	...	...	1,855	17·28	28	·24	1	·008	14	·12	510	4·68	2,739	25·20	1,752	16·08	
	Singbhum	613,579	2,052	40·08	25	·48	1	·01	...	...	1,089	20·28	19	·36	...	...	18	·24	162	3·12	1,264	24·72	1,062	19·56	
	Total	74,428,193	2,58,353	41·64	6,526	·96	702	·12	22,915	3·60	1,26,698	20·40	3,505	·48	1,061	·12	1,381	·12	38,365	6·12	2,01,213	32·40	1,76,028	28·32	
	Average of corresponding month of previous five years	.....	2,49,511	40·20	8,294	1·32	3,651	·48	Data not available.		1,17,911	18·96	4,193	·60	Data not available.		1,164	·12	34,680	5·52	1,76,028	28·32	...	...	
	Difference + or −	.....	+8,842	+1·44	−1,768	−·36	−2,269	−·36			+8,787	+1·44	−688	−·12			+217	Equal	+3,685	+·60	+25,185	+4·08	...	...	

OFFICE OF SANITARY COMMISSIONER FOR BENGAL,
The 20th May 1905.

W. W. CLEMESHA, CAPTAIN, I.M.S.,
Offg. Sanitary Commissioner for Bengal.

Vital Statistics of Towns in Bengal with a population of 20,000 and over during the month of February 1905.

Districts.	Towns.	Population under registration.	Births.		Deaths.																		Average of corresponding month of previous five years.		Remarks.
					Cholera.		Small-pox.		Plague.		Fever.		Dysentery and Diarrhœa.		Respiratory diseases.		Injury.		Other causes.		Total of all causes.				
			Number registered.	Ratio per 1,000 of population per annum.	Number registered.	Ratio per 1,000 of population per annum.	Number registered.	Ratio per 1,000 of population per annum.	Number registered.	Ratio per 1,000 of population per annum.	Number registered.	Ratio per 1,000 of population per annum.	Number registered.	Ratio per 1,000 of population per annum.	Number registered.	Ratio per 1,000 of population per annum.	Number registered.	Ratio per 1,000 of population per annum.	Number registered.	Ratio per 1,000 of population per annum.	Number registered.	Ratio per 1,000 of population per annum.	Number registered.	Ratio per 1,000 of population per annum.	
1	2	3	4	5	6	7	8	9	10	11	12	13	14	15	16	17	18	19	20	21	22	23	24	25	26
Burdwan	1. Burdwan	35,022	82	24·08	2	·60	...	...	...	...	92	31·44	16	5·40	...	...	2	·60	19	6·48	131	44·88	94	32·16	
Bankura	2. Bankura	20,737	35	20·16	5	2·88	...	...	...	...	17	9·72	3	1·68	...	...	...	...	18	10·32	43	24·84	33	19·08	
Midnapore	3. Midnapore	33,140	111	40·08	3	1·08	...	...	1	·36	75	27·12	9	3·24	...	...	1	·36	29	10·44	118	42·72	134	48·48	
Hooghly	4. Hooghly and Chinsura	39,383	70	25·56	4	1·56	...	...	15	7·32	51	20·76	17	6·84	4	1·56	3	1·20	17	6·84	114	46·44	105	42·84	
	5. Serampore	44,451	74	19·92	5	1·32	...	...	...	...	41	11·04	19	5·04	...	...	1	·24	20	5·28	86	23·16	110	29·64	
Howrah	6. Howrah	157,594	350	26·64	37	2·76	1	·07	64	4·80	146	11·04	68	5·16	26	2·64	7	·48	146	11·04	505	38·40	538	40·92	
	7. Cossipore-Chitpur	46,750	58	17·04	3	·84	...	...	...	...	15	4·32	...	...	...	...	2	·48	4	1·08	24	6·96	45	13·20	
24-Parganas	8. Maniktala	32,397	49	14·76	2	·72	...	...	...	...	17	6·24	1	·36	...	...	...	...	8	2·88	28	10·32	40	14·76	
	9. South Suburban	26,374	77	34·92	11	4·99	...	...	...	...	72	32·64	6	2·64	...	...	5	2·16	6	2·64	100	45·48	74	33·60	
	10. Garden Reach	20,211	46	19·56	...	...	...	...	...	...	18	7·56	2	·84	...	...	...	...	3	1·20	23	9·72	53	22·44	
	11. Barnagore	16,822	35	16·44	2	1·32	...	...	...	...	20	9·36	2	1·20	...	...	3	1·32	8	3·72	43	20·28	61	28·68	
	12. Bhatpara	21,840	36	19·94	...	...	...	...	1	·48	25	13·92	6	3·24	2	1·08	...	...	6	2·76	39	21·72	58	32·28	
Calcutta	13. Calcutta	847,796	1,[illegible]	17·88	105	1·44	18	·24	443	6·24	363	5·04	263	3·72	333	4·68	61	·48	847	11·88	2,412	34·08	2,885	40·80	
Nadia	14. Krishnagar	24,547	37	18·00	15	8·76	...	...	...	...	43	20·52	2	·96	...	...	1	·48	5	2·40	68	33·24	69	33·72	
	15. Santipur	26,[illegible]	50	44·16	9	3·96	...	...	3	1·32	34	15·12	1	·36	2	·84	1	·36	15	6·60	65	28·92	64	28·44	
Murshidabad	16. Berhampore	24,[illegible]	43	21·12	...	...	...	...	...	...	44	21·60	1	·48	...	...	...	...	10	4·80	55	27·00	65	31·92	
Rajshahi	17. Rampur Boalia	27,589	59	32·76	...	...	...	...	...	...	34	18·84	...	...	...	...	1	·48	2	1·08	37	20·52	52	28·80	
Pabna	18. Sirajganj	23,114	34	17·64	...	...	...	...	...	...	25	13·44	...	...	...	...	...	...	4	2·04	30	15·48	27	13·92	
Dacca	19. Dacca	90,542	241	31·92	...	...	21	2·76	...	...	109	14·40	14	1·80	...	...	...	...	98	12·96	242	32·04	198	26·16	
	20. Narayanganj	24,472	44	21·48	...	...	...	...	...	...	6	2·88	3	1·44	...	...	...	...	11	5·28	20	9·72	37	18·12	
Chittagong	21. Chittagong	22,140	16	8·64	6	3·24	...	...	...	...	28	15·12	...	...	...	...	...	...	4	2·16	38	20·52	40	21·72	
Patna	22. Patna City	134,788	369	27·48	6	·24	1	·08	490	43·56	169	15·00	45	3·96	15	1·08	15	1·08	182	16·20	917	81·60	940	83·64	
	23. Bihar	45,063	143	38·04	...	...	...	...	23	6·12	18	4·68	6	1·56	2	·48	1	·24	56	14·88	106	28·20	255	67·80	
	24. Dinapore	32,699	45	16·96	...	...	...	...	51	18·12	26	9·24	3	·96	...	...	3	·96	28	9·96	111	39·48	158	56·16	
Gaya	25. Gaya	71,288	163	27·36	7	1·08	...	...	202	33·96	175	29·40	18	3·00	7	1·08	7	1·08	77	12·96	493	82·92	433	72·60	
Shahabad	26. Arrah	46,170	86	22·32	...	...	...	...	434	112·80	20	5·16	2	·48	1	·24	3	·72	11	2·76	471	122·40	224	58·20	
	27. Sasaram	23,644	49	24·84	...	...	...	...	145	73·56	35	17·76	...	...	...	...	2	·96	10	5·04	192	97·44	41	20·76	
Saran	28. Chapra	45,901	100	26·04	...	...	...	...	311	81·24	15	3·84	4	·96	...	...	...	...	60	15·60	390	101·88	249	65·04	
Champaran	29. Bettiah	24,696	61	29·64	...	...	...	...	1	·48	20	9·60	...	...	...	...	...	...	17	8·16	38	18·36	47	22·92	
Muzaffarpur	30. Muzaffarpur	45,617	76	19·92	...	...	...	...	233	61·20	24	6·24	...	...	...	...	2	·48	77	20·16	336	88·32	126	33·12	
	31. Hajipur	21,396	78	45·68	...	...	...	...	49	27·36	17	9·48	5	2·76	...	...	1	·48	32	17·88	104	58·32	144	80·64	
Darbhanga	32. Darbhanga	66,344	151	27·24	...	...	1	·19	50	9·00	34	6·12	15	2·64	...	...	2	·36	115	20·76	217	39·24	319	57·72	
Monghyr	33. Monghyr	39,880	90	30·02	...	...	2	·60	340	113·64	5	1·56	5	1·56	5	1·56	6	1·92	55	18·36	418	139·68	225	75·24	
Bhagalpur	34. Bhagalpur	75,760	171	27·00	1	·19	2	·24	106	17·04	47	7·44	2	·24	2	·24	4	·60	39	6·12	205	32·40	210	33·24	
Cuttack	35. Cuttack	51,364	115	26·76	...	...	...	...	...	...	37	8·64	14	3·24	...	...	...	...	37	8·64	88	20·52	82	19·08	
Balasore	36. Balasore	20,880	45	25·80	7	3·96	...	...	...	...	17	9·72	2	1·08	...	...	...	...	17	9·72	43	24·60	41	23·52	
Puri	37. Puri	49,334	62	15·00	1	·24	2	·48	...	...	36	6·24	10	2·40	6	1·44	...	...	27	6·48	72	17·40	130	31·56	
Ranchi	38. Ranchi	23,510	32	16·08	...	...	...	...	...	...	8	3·96	...	...	...	...	1	·48	5	2·40	14	7·08	19	9·48	
	Total of all towns with a population of 20,000 and over	2,416,049	4,632	22·92	233	1·08	48	·12	2,967	14·64	1,968	9·72	571	2·76	413	2·04	113	·48	2,124	10·44	8,436	41·88	8,424	41·76	
	Average of the corresponding month of previous five years	.....	[illegible]409	21·84	347	1·68	193	·84	Data not available.		2,961	14·64	685	3·36	Data not available.		78	·36	2,473	12·24	8,424	41·76	...	...	
	Difference + or −	.....	+223	+1·08	−114	−·60	−145	−·72			−993	−4·92	−114	−·60			+35	+·12	−349	−1·80	+12	+·12	...	...	

OFFICE OF SANITARY COMMISSIONER FOR BENGAL,
The 20th May 1905.

W. W. CLEMESHA, CAPTAIN, I.M.S.,
Offg. Sanitary Commissioner for Bengal.

Results of the Meteorological Observations taken at the Alipore Observatory from 14th to 20th May 1905.

Month.	Date.	Maximum in sun.	Number of hours of bright sunshine.	Mean pressure barometer at 32° Fahr.	Temperature. Mean.	Maximum.	Range.	Minimum.	Hygrometry. Mean wet bulb.	Vapour tension.	Dew point.	Humidity.	Wind. Prevailing direction.	Miles recorded.	Rain.	Weather.
1905.		°		Inches.	°	°	°	°	°	Inch.	°	%			Inches.	
May	14th	147·2	7·1	29·789	80·2	85·9	12·0	73·9	76·2	0·853	74·4	83	E and NNE ...	62	Nil	Partially cloudy, ⌓.
,,	15th	149·7	10·5	·753	82·3	89·7	14·3	75·4	76·6	·843	74·1	79	E and E by W ...	61	,,	Partially cloudy, ⌓.
,,	16th	149·8	10·6	·737	84·4	92·4	15·5	76·9	77·3	·836	73·8	73	SSE, ESE and Calm.	64	,,	Chiefly clear, ⌓.
,,	17th	149·1	10·6	·689	86·3	93·9	14·7	79·2	78·9	·891	75·9	72	S and SSW ...	129	,,	Chiefly clear, ⌓.
,,	18th	142·8	9·4	·618	86·9	93·4	12·5	80·9	80·6	·968	78·2	78	SSW and S ...	199	,,	Chiefly clear.
,,	19th	147·8	9·0	·564	88·0	96·0	15·5	80·5	82·9	1·064	81·1	82	SSW and SSE ...	178	,,	Chiefly clear.
,,	20th	150·5	9·3	·585	88·6	95·9	14·1	81·8	82·2	1·028	80·1	79	SSE and S by E	115	,,	Chiefly clear.

The mean pressure of the seven days	Inches.	29·676
The average pressure of the corresponding period for 24 years, Surveyor-General's Office		29·675
	Hours.	
The total number of hours of bright sunshine		66·5
The maximum possible number of hours of sunshine		92·4
	°	
The mean temperature of the seven days		85·2
The average temperature of the corresponding period for 24 years, Surveyor-General's Office		86·5
The extreme variation of temperature		22·1
The maximum temperature		96·0
	Miles.	
The highest velocity of the wind in one hour		12
	%	
The mean relative humidity		78
The average relative humidity of the corresponding period for 24 years, Surveyor-General's Office		73
	Inches.	
The total fall of rain from 14th to 20th May 1905		Nil
The average fall of the corresponding period for 24 years, Surveyor-General's Office		0·98
The total fall from 1st January to 20th May 1905		20·48
The average fall of the corresponding period for 24 years, Surveyor-General's Office		7·54

The mean pressure, temperature, etc., are deduced from the traces of the Barograph and Thermograph, and from eye observations.

The maximum and minimum temperatures are obtained from self-registering thermometers. All the thermometers are verified and the readings have been corrected to a standard constructed and verified at the Kew Observatory. They are exposed under a thatched shed open at the sides, and are suspended four feet above the ground.

The barometer readings are corrected to those of the standard, Newman's No. 86, formerly at the Surveyor-General's Office.

The hygrometric elements are obtained from Tables III, IV and V of the official tables computed in the Meteorological Office, and based on Regnault's modifications of August's formula.

The directions and the movement of the wind are taken from the trace of a Beckley's anemograph.

The mouth of the rain-gauge is one foot above the ground. Rainfall reported on any day is for 24 hours preceding 8 A.M. of that day.

⌓, dew.

METEOROLOGICAL OFFICE, GOVT. OF INDIA,
Alipore (Calcutta), the 22nd May 1905.

G. W. KÜCHLER,
for Meteorological Reporter to the Govt. of India and Director-General of Indian Observatories.

EASTERN BENGAL STATE RAILWAY.

Abstract of Principal Commodities carried over the Eastern Bengal State Railway during the month of February 1905 as compared with the same month of the previous year.

No.	Staples.	1905.	1904.	Increase in 1905.	Decrease in 1905.	Explanations of fluctuations by Traffic Superintendent.
		Tons.	Tons.	Tons.	Tons.	
1	Apparel, including drapery, haberdashery, millinery, uniforms, accoutrements, boots and shoes.	111	48	63	.....	
2	Coal and coke carried for the Public and Foreign Railways.	41,046	38,993	2,053	.....	
3	Cotton—					
	(1) Raw	260	290	.....	30	
	(2) Manufactured—					
	(a) Twist and yarn, European	299	243	56	.....	
	(b) Ditto, Indian	166	255	.....	89	
	(c) Piece-goods, European	1,881	1,422	459	.....	
	(d) Ditto, Indian	38	139	.....	101	
	(e) Others	.....	.....	.....	.....	
4	Chemicals, excepting saltpetre	96	68	28	.....	
5	Drugs—					
	(1) Intoxicating, other than opium	.....	4	.....	4	
	(2) Non-intoxicating					
	(a) Medicinal preparations	5	2	3	.....	
	(b) Others	37	65	.....	28	
6	Dyes and Tans—					
	(1) Al (Morinda citrifolia)	.....	.....	.....	.....	
	(2) Alizarine and Aniline dyes	.....	.....	.....	.....	
	(3) Cutch	16	12	4	.....	
	(4) Indigo	2	6	.....	4	
	(5) Myrabolams	.....	.....	.....	.....	
	(6) Tanning barks	.....	.....	.....	.....	
	(7) Turmeric	171	73	98	.....	
	(8) Others	105	16	89	.....	
7	Fodder—					
	(1) Oilcake	536	282	344	...	
	(2) Hay, straw and grass	1,139	1,597	.....	458	
8	Fruits and vegetables, fresh	1,159	1,141	18	.....	
9	Grain and pulse—					
	(1) Gram and pulse	4,404	4,957	.....	553	
	(2) Jawar and bajra	...	.....	.....	.....	
	(3) Rice in the husk	9,001	15,782	.....	6,881	
	(4) Do. not in the husk	11,478	11,984	.....	506	
	(5) Wheat	47	65	.....	18	
	(6) Do. flour	783	1,159	.....	376	
	(7) Others	162	4	158	.....	
10	Hides and skins—					
	(1) Hides of cattle—					
	(a) Dressed or tanned	.....	.....	.....	.....	
	(b) Raw	1,802	2,257	.....	455	
	(2) Skins of sheep and other animals—					
	(a) Dressed or tanned	.....	.....	.....	.....	
	(b) Raw	156	74	82	.....	
11	Horns	2	2	.....	.....	
12	Hemp (Indian) and other fibres, excluding jute.	1,296	37	1,258	.....	
13	Jute—					
	(1) Raw	18,609	26,675	.....	7,906	
	(2) Gunny-bags and cloth	4,080	1,305	2,775	.....	
14	Lac	106	109	.....	3	
15	Leather—					
	(1) Unwrought	.....	1	.....	1	
	(2) Wrought, excepting boots and shoes	.....	.....	.....	.....	
16	Liquors—					
	(1) Ale and beer	13	27	.....	14	
	(2) Spirits of all kinds, including country spirit.	64	108	.....	44	
	(3) Wine					
	(4) All other sorts, including toddy and fermented liquors, other than ale and beer.	.....	.....	.....	.....	
17	Metals—					
	(1) Brass, unwrought	13	72	.....	59	
	(2) Do., wrought	180	161	19	.....	
	(3) Copper, unwrought	109	2	107	.....	
	(4) Do., wrought	23	17	5	.....	
	(5) Iron and steel—					
	(a) Cast	66	100	.....	34	
	(b) Unwrought	100	.....	100	.....	
	(c) Wrought	2,892	2,171	721	.....	
	(d) Manufactures	1,025	338	707	.....	
	(6) Others	251	215	36	.....	
18	Oils—					
	(1) Kerosene	14,144	10,073	4,071	.....	
	(2) Castor	17	14	3	.....	
	(3) Cocoanut	86	37	49	.....	
	(4) Mustard and rape	2,377	371	2,006	.....	
	(5) Others	217	181	36	.....	
19	Oilseeds—					
	(1) Castor	2	79	.....	77	
	(2) Earthnuts	.....	.....	.....	.....	
	(3) Linseed	357	307	50	.....	
	(4) Poppy	.....	.....	.....	.....	
	(5) Rape and mustard	1,379	1,321	58	.....	
	(6) Til or jinjili	70	36	34	.....	
	(7) Others	8	36	.....	28	
20	Opium	1	.....	1	.....	
21	Paper and pasteboard	769	553	216	.....	
22	Provisions—					
	(1) Dried fruits and nuts	7	2	5	.....	
	(2) Ghee	60	176	.....	116	
	(3) Others	634	299	335	.....	

No.	Staples.	1905.	1904.	Increase in 1905.	Decrease in 1905.	Explanations of fluctuations by Traffic Superintendent.
		Tons.	Tons.	Tons.	Tons.	
23	Railway Plant, &c., for the Public and Foreign Railways—					
	(1) Locomotive engines and tenders and parts thereof	59	636	.....	577	
	(2) Carriages and trucks and parts thereof	.....	147	.....	147	
	(3) Materials—					
	(a) Steel rails and fish-plates	.....	.....	.....	.....	
	(b) Sleepers and keys of steel and cast-iron.	.....	.....	.....	.....	
	(c) Others	435	3,081	.....	2,646	
24	Salt	4,475	5,859	.....	1,384	
25	Saltpetre and other saline substances—					
	(1) Saltpetre	7	2	5	.....	
	(2) Other saline substances	265	193	72	.....	
26	Silk—					
	(1) Raw—					
	(a) Foreign	.....	.....	.....	.....	
	(b) Indian	11	12	.....	1	
	(2) Piece-goods—					
	(a) Foreign	.....	.....	.....	.....	
	(b) Indian	.....	.....	.....	.....	
27	Spices—					
	(1) Betelnuts	1,166	948	203	.....	
	(2) Cardamoms	356	19	337	.....	
	(3) Chillies	436	471	.....	35	
	(4) Ginger	46	48	.....	2	
	(5) Pepper	85	33	52	.....	
	(6) Others	176	156	19	.....	
28	Stone and lime	2,294	2,596	.....	302	
29	Sugar—					
	(1) Refined or crystallised, including sugar-candy.	411	1,185	.....	774	
	(2) Unrefined—					
	(a) Sugar	1,289	1,425	.....	136	
	(b) Gur, rab, jaggery, molasses, and other saccharine produce.	1,771	2,271	.....	500	
30	Tea—					
	(1) Foreign	.....	.....	.....	.....	
	(2) Indian	229	260	.....	31	
31	Tobacco—					
	(1) Unmanufactured	825	888	.....	63	
	(2) Manufactured—					
	(a) Cigars	.....	97	.....	97	
	(b) Other sorts	37	16	21	.....	
32	Wood—					
	(1) Timber, unwrought	3,241	707	2,534	.....	
	(2) Manufactures	230	160	70	.....	
33	Wool—					
	(1) Raw	114	63	51	.....	
	(2) Manufactured—					
	(a) Carpets and rugs					
	(b) Piece-goods, European	18	7	11	.....	
	(c) Ditto, Indian					
	(d) Other sorts of manufactures ...					
34	All other articles of merchandise	7,075	12,748	.....	5,673	
	Total ...	149,192	157,004	19,521	27,333	

B. N. Mitra,
for *Examiner of Accounts, E. B. S. Ry.*

Calcutta, *the 17th May 1905.*

Weekly Return of Traffic Receipts on Indian Railways.

EASTERN BENGAL STATE RAILWAY SYSTEM.

(INCLUDING B.-S. B., R. M. B. AND R.-K. L. RAILWAYS.)

Approximate Return of Traffic and Mileage for the week ended 13th May 1905 on 1,053 miles open.

	Coaching Traffic.		Merchandise and Mineral Traffic.		Other earnings (including steam-boat.)	Total earnings.	Traffic Train-miles run.		
	No. of passengers.	Coaching receipts.	Weight carried.	Receipts.			Coaching.	Merchandise.	Total.
		Rs. A. P.	Mds. s.	Rs. A. P.	Rs. A. P.	Rs. A. P.			
Total traffic for the week ...	269,170	1,25,530 0 0	6,09,960 0	1,10,870 0 0	7,290 0 0	2,43,690 0 0	45,649	30,960	76,609
Or per mile of railway	256	119 0 0	577 0	105 0 0	1 8 0*	225 0 0*	...	...	...
For previous 18 weeks of half-year†	5,121,654	24,85,193 0 0	2,07,28,416 0	23,28,754 0 0	3,55,590 0 0	53,79,545 0 0	809,911	623,779	1,433,690
Total for 19 weeks ...	5,390,824	26,10,723 0 0	2,15,98,376 0	24,39,624 0 0	3,72,880 0 0	56,23,235 0 0	855,560	654,739	1,510,299
COMPARISON.									
Total for corresponding week of previous year ...	265,115	1,18,862 0 0	10,33,865 0	1,27,480 0 0	8,202 0 0	2,54,554 0 0	42 2°2	36,153	80,355
For mile of railway corresponding week of previous year (997 miles)	277	124 0 0	1,080 0	133 0 0	2 0 0	259 0 0	...	...	...
Total to corresponding date of previous year	5,307,714	25,89,932 0 0	2,44,37,651 0	31,65,582 0 0	4,13,710 0 0	61,69,224 0 0	789,707	783,621	1,573,328

* Excluding ferry earnings, Rs. 6,490
† Audited up to week ending 18th March 1905

DACCA STATE RAILWAY

Approximate Return of Traffic and Mileage for the week ended 13th May 1905 on 86 miles open.

	Coaching Traffic.		Merchandise and Mineral Traffic.		Other earnings.	Total earnings.	Traffic Train-miles run.		
	No. of passengers.	Coaching receipts.	Weight carried.	Receipts.			Coaching.	Merchandise.	Total.
		Rs. A. P.	Mds. s.	Rs. A. P.	Rs. A. P.	Rs. A. P.			
Total traffic for the week ..	26,830	7,560 0 0	16,490 0	1,630 0 0	620 0 0	9,800 0 0	3,318	1,128	4,449
Or per mile of railway ...	312	88 0 0	192 0	19 0 0	7 0 0	114 0 0	..	..	..
For previous 18 weeks of half-year*	538,282	1,56,628 0 0	7,02,555 0	*93,675 0 0	4,039 0 0	2,13,342 0 0	53,465	23,258	76,723
Total for 19 weeks ...	569,112	1,64,178 0 0	7,19,045 0	95,305 0 0	4,659 0 0	2,23,142 0 0	56,783	24,390	81,173
COMPARISON.									
Total for corresponding week of previous year ..	25,794	7,313 0 0	13,665 0	1,609 0 0	622 0 0	9,435 0 0	3,186	1,122	4,308
For mile of railway corresponding week of previous year ...	300	84 0 0	159 0	19 0 0	7 0 0	110* 0 0			
Total to corresponding date of previous year	564,710	1,71,515 0 0	8,33,410 0	98,231 0 0	4,783 0 0	2 38,529 0 0	55,841	34,768	90 609

* Audited up to week ending 18th March 1905

COOCH BEHAR STATE RAILWAY

Approximate Return of Traffic and Mileage for the week ended 13th May 1905 on 338 miles open

	Coaching Traffic.		Merchandise and Mineral Traffic.		Other earnings (including ferry).	Total earnings.	Traffic Train-miles run.		
	No. of passengers.	Coaching receipts.	Weight carried.	Receipts.			Coaching.	Merchandise.	Total.
		Rs. A. P.	Mds. s.	Rs. A. P.	Rs. A. P.	Rs. A. P.			
Total traffic for the week ...	3,480	1,380 0 0	3,100 0	360 0 0	10 0 0	2,250 0 0	443	(a)376	819
Or per mile of railway	103	41 0 0	241 0	26 0 0		67 0 0	..	..	..
For previous 18 weeks of half-year*	58,193	24,095 0 0	12,09,333 0	35,130 0 0	189 0 0	59,404 0 0	8,966	30,564	39,530
Total for 19 weeks .	61,673	25,475 0 0	12,12,433 0	35,960 0 0	199 0 0	61,654 0 0	9,409	30,930	39,339
COMPARISON.									
Total for corresponding week of previous year	3,276	1,255 0 0	10,569 0	1,097 0 0	9 0 0	2,274 0 0	403	1,959	2,414
For mile of railway corresponding week of previous year	98	38 0 0	315 0	30 0 0	...	68 0 0	...	...	...
Total to corresponding date of previous year	61,447	22,912 0 0	12,33,766 0	20,365 0 0	781 0 0	61,058 0 0	8 922	30,978	39,900

(a) Ballast train-miles nil.
* Audited up to week ending 18th March 1905.

MYMENSINGH-JAGANNATHGANJ RAILWAY.

Approximate Return of Traffic and Mileage for the week ended 13th May 1905 on 51·37 miles open.

	Coaching Traffic.		Merchandise and Mineral Traffic.		Other earnings (including ferry).	Total earnings.	Traffic Train-miles run.		
	No. of passengers.	Coaching receipts.	Weight carried.	Receipts.			Coaching.	Merchandise.	Total.
		Rs. A. P.	Mds. s.	Rs. A. P.	Rs. A. P.	Rs. A. P.			
Total traffic for the week ...	7,460	2,300 0 0	8,770 0	490 0 0	10 0 0	2,790 0 0	1,129	260	1,389
Or per mile of railway ...	145	45 0 0	171 0	9 0 0	...	54 0 0	...	...	...
For previous 18 weeks of half-year*	156,626	46,638 0 0	2,84,147 0	14,181 0 0	304 0 0	61,123 0 0	19,070	6,719	25,789
Total for 19 weeks ...	164,070	48,938 0 0	2,92,917 0	14,681 0 0	314 0 0	63,913 0 0	20,199	7,011	27,210
Comparison.									
Total for corresponding week of previous year	8,302	2,566 0 0	4,163 0	331 0 0	5 0 0	2,845 0 0	1,177	251	1,428
Per mile of railway corresponding week of previous year ...	158	48 0 0	78 0	6 0 0	...	54 0 0	...	...	...
Total to corresponding date of previous year	206,653	58,668 0 0	3,74,366 0	20,273 0 0	497 0 0	79,367 0 0	26,786	10,837	37,623

* Audited up to week ending 18th March 1905.

BENGAL CENTRAL RAILWAY COMPANY, LIMITED.

Approximate Return of Traffic and Mileage for the week ended 6th May 1905 on 139 miles open.

	Coaching Traffic.		Merchandise and Mineral Traffic.		Other earnings.	Total earnings.	Traffic Train-miles run.		
	Number of passengers.	Coaching receipts.	Weight carried.	Receipts.			Coaching.	Merchandise.	Total.
		Rs. A. P.	Mds. s.	Rs. A. P.	Rs. A. P.	Rs. A. P.			
Total traffic for the week ...	57,140	16,492 0 0	74,706 0	6,599 0 0	134 0 0	23,185 0 0	4,074	3,306	7,380
Or per mile of railway	440	127 0 0†	587 0	47 0 0	1 0 0	175 0 0	.....	...	.....
For previous 17 weeks of half-year*	677,497	1,71,767 0 0	12,73,312 0	96,700 0 0	63,151 0 0	4,33,618 0 0	78,213	49,129	127,340
Total for 18 weeks ...	734,477	1,88,219 0 0	13,47,018 0	1,03,299 0 0	63,285 0 0	4,56,803 0 0	82,285	52,435	134,720
Comparison.									
Total for corresponding week of previous year ...	59,094	17,336 0 0	65,947 0	5,561 0 0	104 0 0	23,001 0 0	5,015	2,169	7,184
Per mile of railway corresponding week of previous year	454	133 0 0†	474 0	40 0 0	1 0 0	176 0 0	.....	.....	.....
Total to corresponding date of previous year	743,471	2,00,451 0 0	17,75,018 0	1,36,651 0 0	80,756 0 0	4,97,863 0 0	88,130	47,278	135,409

* Audited up to week ended 18th March 1905.
† Coaching traffic calculated on 130 miles only.

BENGAL AND NORTH-WESTERN RAILWAY.

Approximate Return of Traffic for the week ending 6th May 1905 on 1,467 miles open.

	Coaching Traffic.		Merchandise and Mineral Traffic.		Other earnings (estimated), including steam-boat.	Total earnings.	Traffic Train-miles run.		
	Number of passengers.	Receipts.	Weight carried.	Receipts.			Coaching.	Merchandise.	Total.
		Rs.	Mds.	Rs.	Rs.	Rs.			
Total traffic for the week on 1,467 miles open	267,469 182·32	(a)1,04,790 71·43	10,86,370 740·50	(b)1,42,366 97 04	(c) 19,920 13·58	2,67,076 182 05	41,603	(d) 43,668	85,271 .....
Or per mile of railway ...									
For previous 17 weeks of half-year (e)	4,161,676	17,31,654	1,78,67,996	23,62,539	3,56,903	43,51,455	732,649	728,740	1,461,383
Total for 18 weeks ...	4,429,145	18,36,444	1,89,54,366	24,05,359	3,76,823	46,18,533	764,246	772,408	1,536,654
Comparison.									
Total for corresponding week of previous year on 1,363 miles open	304,686	1,36,698	11,20,353	1,49,760	28,933	3,15,430	41,638	(f) 40,666	82,289
Per mile of railway corresponding week of previous year ...	219·47	98·44	814·23	107·97	20·85	227·26	.....	.....	.....
Total to corresponding date of previous year	4,308,025	19,62,264	1,86,57,294	24,39,517	4,13,531	48,15,312	733,947	717,734	1,451,678

(a) Decrease mainly under local and foreign outward due to heavy bookings last year.
(b) Ditto chiefly under foreign outward due to damage to crops by cold earlier in the year.
(c) Ditto principally under steam-boat.
(d) Includes 5,148 miles of ballast trains.
(e) Ditto audited figures up to week ending 18th March 1905.
(f) Ditto 4,575 miles of ballast trains.

ASSAM-BENGAL RAILWAY.

Approximate Return of traffic for the week ended 6th May 1905 on 737 miles open for all descriptions of traffic, and an additional 3 miles for goods traffic only.

	Coaching Traffic.		Merchandise and Mineral Traffic.		Other earnings (estimated), including steam-boat.	Total earnings.	Traffic Train-miles run.		
	No. of passengers.	Coaching receipts.	Weight carried.	Receipts.			Coaching.	Merchandise.	Total.
		Rs. A. P.	Mds. S.	Rs. A. P.	Rs. A. P.	Rs. A. P.			
Total traffic for the week ...	47,607	27,811 0 0	1,44,215 0	19,365 0 0	3,845 0 0	51,021 0 0	10,748	13,092	23,840
Or per mile of railway	64·60	37·74	194·69	26·17	5·20	69·11	14·58	17·69	32·27
For previous 17 weeks of half-year	321,493	5,52,304 0 0	26,83,434 0	4,18,552 0 0	44,069 0 0	10,15,015 0 0	179,456	256,207	435,663
Total for 18 weeks ...	369,105	5,80,205 0 0	28,32,649 0	4,37,917 0 0	47,914 0 0	10,66,036 0 0	190,234	269,299	459,533
Comparison.									
Total for corresponding week of previous year	41,000	22,797 0 0	1,08,877 0	14,010 0 0	2,470 0 0	39,288 0 0	7,194	8,236	15,430
Per mile of railway corresponding week of previous year	55·63	30·93	147·13	18·94	3·34	53·21	9·76	11·12	20·88
Total to corresponding date of previous year	808,970	5,24,117 0 0	24,81,880 0	3,69,021 0 0	48,109 0 0	9,41,247 0 0	160,283	196,348	356,631

FINANCIAL YEAR.

Approximate Statement of Gross Receipts of the Assam-Bengal Railway.

Receipts for week ending 6th May 1905.			Receipts for week ending 7th May 1904.			Total receipts from 1st April 1905 to 6th May 1905.			Total receipts from 1st April 1904 to 7th May 1904.			Total increase in 1905.	Total decrease in 1905.
Mean mileage worked.	Receipts.	Per mile worked.	Mean mileage worked.	Receipts.	Per mile worked.	Mean mileage worked.	Total receipts.	Per mile worked per week.	Mean mileage worked.	Total receipts.	Per mile worked per week.		
	Rs.	Rs.		Rs.	Rs.		Rs.			Rs.		Rs.	
740	51,021	69·11	740	39,286	53·21	740	2,85,328	...	740	2,17,546	...	67,782	.....

DARJEELING-HIMALAYAN RAILWAY COMPANY, LIMITED.

			Rs. A. P.	Rs. A. P.
Approximate earnings for the week ending 13th May 1905	...	Coaching ...	10,204 0 0	24,699 0 0
		Goods ...	14,444 0 0	
		Other earnings ...	51 0 0	
Audited earnings for the corresponding period of 1904	...	Coaching ...	8,286 0 0	22,409 0 0
		Goods ...	14,032 0 0	
		Other earnings ...	81 0 0	
		Increase	—	2,290 0 0
Receipts per mile for the week ending 13th May 1905			—	484 4 8
Ditto for the corresponding period of 1904			—	439 6 3
		Increase	—	44 14 5
Receipts from 1st January to 13th May 1905	...		—	50 0 0
Ditto for the corresponding period of 1904			—	les open 3 0 0
		Decrease	...	0 0

Trav— Train-—

Printed at the Printing Office, and published by the Book Depôt, of the Bengal Secretariat, W[illegible]s' Buildings, in the City of Calcutta, on 24th May 1905.

REGISTERED No. C 209.]

No. 22 of 1905.

The Calcutta Gazette.

WEDNESDAY, MAY 31, 1905.

CONTENTS.

	Page
PART I.—Orders and Notifications by the Lieutenant-Governor of Bengal, the High Court, Government Treasury, etc.	955—1006
PART IA.—Orders and Notifications by the Government of India	103—104
PART IB.—Orders by the Lieutenant-Governor of Bengal	33—36
PART II.—Advertisements	649—696
PART III.—Acts of the Bengal Council	Nil
PART IV.—Bills of the Bengal Council	Nil
PART IVA.—Proceedings of the Bengal Legislative Council	Nil
PART V.—Acts of the Governor-General's Council assented to by the Governor-General	Nil
PART VI.—Bills introduced into the Council of the Governor-General for making Laws and Regulations or published under Rule 38	Nil
APPENDIX.—Marine Notifications	171—177
SUPPLEMENT No. 33—	
Resolution on the Annual Report on the Police Administration of the Town of Calcutta and its Suburbs for the year 1904	805
Report on the state of the Salt Market for the fourth quarter of 1904-1905	808
Annual Report of the Royal Botanic Garden, Calcutta, for the year 1904-1905	811
Statistical Return of Crops, Prices-current Irrigation Operation, Circular and Eastern Canals, Results of Meteorological Observations, Railway Traffic Receipts, &c., &c.	813—844

PART I.

Orders and Notifications by the Lieutenant-Governor of Bengal, the High Court, Government Treasury, &c.

ORDERS BY THE LIEUT.-GOVERNOR OF BENGAL.

No. 2875A.

APPOINTMENTS AND TRANSFERS.

GENERAL.—*No. 1116A.D.—The 27th May 1905.*—Babu Bhupendra Nath Mookerjee, Deputy Magistrate and Deputy Collector, Balasore, is transferred to the head-quarters station of the Jessore district.

Balasore.
Jessore.

No. 1118A.D.—The 27th May 1905.—Maulvi Abdus Salam, Deputy Magistrate and Deputy Collector, on leave, is posted to the head-quarters station of the Balasore district.

Balasore.

POLICE.—*No. 1106A.D.—The 27th May 1905.*—Mr. L. H. Burton, Assistant Superintendent of Police, Dacca, is transferred to Purulia and appointed to hold charge of the school which is to be opened there for the training of constables.

Dacca.
Manbhum.

EDUCATION.—*No. 1048A D.—The 24th May 1905.*—Babu Baldev Misra, Assistant Inspector of Schools, Chota Nagpur Division, is placed in charge of the office of the Inspector of Schools of that Division in addition to his own duties, *vice* Babu Sasi Bhusan Dutt, on leave.

Chota Nagpur Divn.

EXCISE.—*No. 1203A D.—The 30th May 1905.*—Babu Lalit Mohun Pal, substantive *pro tempore* Deputy Magistrate and Deputy Collector, is appointed to be Special Excise Deputy Collector, Purnea, on being relieved of his present appointment as Superintendent of Distillery, Rusa, 24-Parganas.

24-Parganas.
Purnea.

PROMOTIONS.

POLICE.—*No. 1075A.D.—The 26th May 1905.*—The following confirmations and promotions are sanctioned in the grades of Deputy Inspectors-General and District and Assistant Superintendents of Police, with effect from the 1st May 1905 :—

Confirmed in the grade of Deputy Inspectors-General.

Mr. R. F. Guise, *vice* Mr. G. D. Graham, retired.

Confirmed in the 1st grade of District Superintendents.

Mr. T. C. Orr, *vice* Mr. R. F. Guise.

Confirmed in the 2nd grade of District Superintendents.

Mr. H. M. Parish, *vice* Mr. T. C. Orr.

Confirmed in the 3rd grade of District Superintendents.

Mr. J. Cowie, *vice* Mr. H. M. Parish.

Confirmed in the 4th grade of District Superintendents.

Mr. R. F. G. Godfrey-Faussett, *vice* Mr. J. Cowie.

Confirmed in the 5th grade of District Superintendents.

Rai Madhu Shudan Chaudhuri Bahadur, *vice* Mr. R. F. G. Godfrey-Faussett.

Promoted to the 6th grade of District Superintendents.

Lord Terence Browne, on furlough, *vice* Rai Madhu Shudan Chaudhuri Bahadur.

Promoted to the 1st grade of Assistant Superintendents.

Mr. R. S. F. Macrae, on deputation, *vice* Lord Terence Browne.

LEAVE.

GENERAL.—*No. 1077A.D.—The 26th May 1905.*—Babu Khirode Chandra Sen, Deputy Magistrate and Deputy Collector, Saran, is allowed leave for three weeks, under article 260 of the Civil Service Regulations, with effect from the 26th May 1905.

Saran.

No. 1114A.D.—The 27th May 1905.—Babu Ramesh Chandra Sinha, substantive *pro tempore* Deputy Magistrate and Deputy Collector, Tippera, is allowed leave for three months, under article 260 of the Civil Service Regulations, with effect from the 1st June 1905, or any subsequent date on which he may avail himself of it.

Tippera.

REGISTRATION.—*No. 1176A.D.—The 29th May 1905.*—Babu Kripa Nath Dutt, Special Sub-Registrar, Birbhum, is allowed leave for eleven days, under article 260 of the Civil Service Regulations, with effect from the 28th May 1905.

Birbhum.

EDUCATION.—*No. 1046A.D.—The 24th May 1905.*—Babu Sasi Bhusan Dutt, Inspector of Schools, Chota Nagpur Division, is allowed leave for forty days, under article 260 of the Civil Service Regulations, with effect from the 2nd June 1905, or any subsequent date on which he may avail himself of it.

Chota Nagpur Divn.

POWERS.

GENERAL.—*No. 1140A.D.—The 27th May 1905.*—Babu Kali Mohan Sen, substantive *pro tempore* Deputy Collector, employed on partition work, Muzaffarpur, is vested with the powers of a Collector, under Act I of 1894, in that district.

Muzaffarpur.

No. 1163A.D.—The 29th May 1905.—Babu Banku Behary Dutta, Deputy Collector, Supaul, Bhagalpur, is vested with the powers of a Collector, under Act I of 1894, in that subdivision.

Bhagalpur.

The following orders are republished from the *Assam Gazette* :—

No. 424G.—The 22nd May 1905 —Mr. C. W. T. Feilman, Assistant Superintendent of Police, Goalpara, is transferred to Tezpur, and placed in charge of the Civil Police of the Darrang district.

No. 424TG.—The 22nd May 1905.—Mr. F. R. Ezechiel, Assistant Superintendent of Police, and Assistant to the Superintendent, Lushai Hills, Aijal, is transferred to Dhubri, and placed in charge of the Civil Police of the Goalpara district.

R. W. CARLYLE,
Offg. Chief Secy. to the Govt. of Bengal.

REVENUE DEPARTMENT.

NOTIFICATIONS.

No. 904For.—The 23rd May 1905.—The following revised schedule of Protected Forest blocks and sub-blocks in the Kolhan Government estate should be substituted for the one appended to Notification No. 1801For., dated the 22nd March 1904, published in the *Calcutta Gazette* of the 23rd idem :—

Schedule of Protected Forest blocks and sub-blocks in the Kolhan Government Estate.

Serial No.		Name of sub-block.	Name of pir.	Manki's circle from which land has been taken to form the sub-block.
Main block.	Sub-block.			
1	1	Gutuhatu	Ajudhya pir ...	Saluka Manki.
„	2	Khutpani	„ „ ...	Jandoy „
2	3	Dopai	„ „ ...	„ „
„	3A	Do	„ „ ...	Saluka „
3	4	Chirubera	Gulkera „ ...	Antu „
4	5	Tuia	„ „ ...	„ „
5	6	Ichahatu	Kainua „ ...	Jadab „
6	7	Kuira	Kuldiha „ ...	Songa „
7	8	Mohansai	„ „ ...	„ „
8	9	Amrai	„ „ ...	„ „
9	10	Kara	Relu (Rela) „ ...	Gomea „
10	11	Gunmore	Saranda „ ...	Kaira „
„	12	Dogonia	„ „ ...	„ „
„	13	Kaidha	„ „ ...	„ „
„	14	Thunisai	„ „ ...	„ „
11	15	Rabangdha	„ „ ...	„ „
„	16	Sunsuna	„ „ ...	„ „
12	17	Segjor	„ „ ...	„ „
13	18	Samtha	„ „ ...	„ „
14	19	Makaranda	„ „ ...	„ „
15	20	Noagaon	„ „ ...	Chandra „
16	21	Kodalibad	„ „ ...	„ „
17	22	Usuria	„ „ ...	Chamru „
17A	22A	Kulsiburu	„ „ ...	„ „
18	23	Marangponga	„ „ ...	„ „
19	24	Bhada	„ „ ...	Chandra „
20	25	Sonapi	„ „ ...	Chamru „
20A	25A	Hatnaburu	„ „ ...	„ „
21	26	Chota Nagra	„ „ ...	„ „
22	27	Joj gutu	„ „ ...	Chandra „
23	28	Dhobil	„ „ ...	Chamru „
24	29	Kumbia	„ „ ...	„ „
25	30	Henua (Henna)	„ „ ...	„ „
26	31	Kasiapancha	„ „ ...	Tipru „
27	32	Agraia	Latua „ ...	Chokro „
28	33	Kadalsukua	„ „ ...	„ „
29	34	Tinsura	Rengra „ ...	Baburam „
„	35	Rengrahatu	„ „ ...	„ „
30	36	Anjidbera	Kainua „ ...	Jadab „
„	37	Roro	Barkela „ ...	Bouj „
„	38	Birsing	Gumra „ ...	Kerse „
„	39			
„	40	Kenjra	„ „ ...	Rengo „
„	41	Uchadli	„ „ ...	„ „
„	42	Baihatu	Rengra „ ...	Baburam „
„	43	Kudahatu	„ „ ...	„ „
„	44	Tonto	„ „ ...	„ „
„	45	Bandhabera	„ „ ...	„ „
„	46	Suamba	„ „ ...	„ „
„	47	Burutan	„ „ ...	„ „
„	48	Mailpi	„ „ ...	„ „
31	49	Durula	Gumra „ ...	Mahati „
„	50	Romara	Rengra „ ...	Baburam „
32	51	Siringsia	Gumra „ ...	Mahati „
33	52	Jojokabir	Bantaria „ ...	Roya „
„	53	Nougra	Bor „ ...	Damoo „
34	54	Karamburu	„ „ ...	„ „
„	55	Damarjoa	Bantaria „ ...	Roya „
35	56	Bambasai	„ „ ...	„ „
36	57	Barbaria	„ „ ...	„ „
37	58	Barsiburu	Saranda „ ...	Chandra „
„	59	Naia (Nuia)	„ „ ...	Tipru „
„	60	Bokra	Jamda „ ...	Rengso „
„	61	Diriburu	„ „ ...	„ „
„	62	Jamda	„ „ ...	„ „
„	63	Dudhbhila	Kotgarh „ ...	Sahu „
„	64	Hesapi	„ „ ...	„ „
„	65	Buru Raika	„ „ ...	„ „
„	66	Iapunga	Jamda „ ...	Rengso „
38	67	Gua	Saranda „ ...	Tipu „
39	68	Pandra Sali	Jamda „ ...	Rengso „

Serial No.		Name of sub-block.	Name of pir.	Manki's circle from which land has been taken to form the sub-block.
Main block.	Sub-block.			
40	69	Noa Mundi	Kotgarh pir ...	Sahu Manki.
41	70	Katra, W. (Karta, W.) ...	,, ,, ...	,, ,,
,,	71	Katra, S. (Karta, S) ...	Bor ,, ...	Aiban ,,
,,	72	Katra, N. (Karta, N.) ...	Kotgarh ,, ...	Goma ,,
42	73	Gundigoa	,, ,, ...	Sahu ,,
,,	74	Makadi	,, ,, ...	Goma ,,
43	75	Kumirta	,, ,, ...	,, ,,
,,	76	Katigoda	,, ,, ...	Sahu ,,
44	77	Jampani	Bor ,, ...	Aiban ,,
,,	78	Sarbil	,, ,, ...	,, ,,
,,	78A	Do.	Kotgarh ,, ...	Goma ,,
45	79	Kuchibera	,, ,, ...	,, ,,
46	80	Kolita	,, ,, ...	,, ,,
47	81	Rengarbera	Bor ,, ...	Aiban ,,
48	82	Kendua	,, ,, ...	Dokonia ,,
,,	82A	Do.	,, ,, ...	Aiban ,,
49	83	Jamarpusi	Aola ,, ...	Beral ,,
50	84	Heselberel	,, ,, ...	,, ,,
51	85	Delgopara	,, ,, ...	Dila ,,
52	86	Ghoraband	,, ,, ...	,, ,,
,,	87	Panduburu	,, ,, ...	Jena (Jona) ,,
53	88	Dhobadhobin	,, ,, ...	Uchuba ,,
,,	89	Barakata	,, ,, ...	Ghasiram ,,
,,	90	Undula (Unduda)	,, ,, ...	Machua ,,
,,	91	Deojhor	,, ,, ...	,, ,,
54	92	Balidaskand	Lalgarh ,, ...	Kusnu ,,
55	93	Champila	,, ,, ...	,, ,,
56	94	Haldipokhar	,, ,, ...	,, ,,
,,	95	Teaposi	,, ,, ...	Singa ,,
,,	96	Baida	Nagra ,, ...	Jamdar ,,
,,	97	Bhagabila	Bharbharia ,, ...	Rasika ,,
,,	98	Baihatu	Lalgarh ,, ...	Singa ,,
,,	99	Kharband	,, ,, ...	Bate ,,
,,	100	Sosopi	Bharbharia ,, ...	Duka ,,
,,	101	Bamunlata	,, ,, ...	Kaira ,,
,,	102	Ponga	Thai ,, ...	Gardi ,,
,,	103	Karadhoa	Bharbharia ,, ...	Kaira ,,
,,	104	Silpungi	Thai ,, ...	Paikrai ,,
,,	105	Tengrai	,, ,, ...	Arjuna ,,
57	106	Debrabir	,, ,, ...	,, ,,
58	107	Mohaburu	,, ,, ...	Gardi ,,

No. 874T.R.—The 23rd May 1905.—Mr. H. H. Haines, F.C.H., Deputy Conservator of Forests, in charge of the Tista Division, is placed on special duty, with effect from the afternoon of the 7th May 1905, in connection with the preparation of a descriptive list of plants in the Chota Nagpur Division.

Chota Nagpur. Jalpaiguri.

No. 875T.R.—The 23rd May 1905.—The services of Mr. H. H. Haines, F.C.H., Deputy Conservator of Forests, Bengal, are placed at the disposal of the Government of India, Revenue and Agricultural Department, with effect from the 21st June 1905, for employment as Deputy Director of the Imperial Forest School, Dehra Dun.

Dehra Dun.

No. 876T.R.—The 23rd May 1905.—Mr. P. Tinne, Assistant Conservator of Forests, attached to the Darjeeling Division, is placed in charge of the Tista Division, during the absence, on deputation, of Mr. H. H. Haines, or until further orders.

Darjeeling.

No. 879T.R.—The 22nd May 1905.—The Declaration No. 645T.M., dated the 19th May 1905, published at page 140 of Part IB of the *Calcutta Gazette* of the 25th idem, in respect of land required for a new road leading from Bannerjeepara Lane to Dewangazi Lane in Ward II of the Bally Municipality, in the village of Bally, district Hooghly, is hereby cancelled.

Hooghly.

No. 888T.R.—The 23rd May 1905.—Babu Hem Chandra Chatterjee, Deputy Magistrate and Deputy Collector, employed on partition work in the districts of Mymensingh and Dacca, is allowed privilege leave, under article 260 of the Civil Service Regulations, for fifteen days, with effect from the 8th May 1905.

Mymensingh and Dacca.

No. 917T.R.—The 23rd May 1905.—Babu Jogendra Kumar Bose, Deputy Magistrate and Deputy Collector, now employed as Settlement Officer in the district of Dacca, is allowed privilege leave, under article 260 of the Civil Service Regulations, for one month and-a-half, with effect from the 18th April 1905.

Dacca.

No. 918T.R.—The 23rd May 1905.—Maulvi Muhammud Abdul Momen, Sub-Deputy Collector, employed as an Assistant Settlement Officer in the district of Backergunge, is allowed privilege leave, under article 260 of the Civil Service Regulations, for three months, with effect from the 1st June 1905, or any subsequent date on which he may avail himself of it.

Backergunge.

No. 919T.R.—The 24th May 1905.—Under the authority vested in him by section 6, clause (2) of the Prevention of Cruelty to Animals Act, XI of 1890, the Lieutenant-Governor is pleased to declare the Veterinary Infirmary kept by the Dacca Municipality at the Old lines, situated within the limits of that Municipality, to be an infirmary for the treatment and care of such animals in respect of which any offence under section 6, clause (1) of the same Act, has been committed.

Dacca.

No. 899T.R.—The 24th May 1905.—The following schedule, with explanation sheet, prepared by the Director of the Department of Land Records and Agriculture, is published for general information, as directed in section 3 (3) of the Bengal Famine Code, revised edition of December 1895.

R. W. CARLYLE,
Offg. Chief Secy. to the Govt. of Bengal.

Schedule of normal rates of prices (number of Sérs for a rupee)

District and Mart.	Common Rice (*Mota chaul*).											
	For last day or last market day of January.			For last day or last market day of April.			For last day or last market day of July.			For last day or last market day of October.		
	Normal rate.	20 per cent. above normal rate.	40 per cent. above normal rate.	Normal rate.	20 per cent. above normal rate.	40 per cent. above normal rate.	Normal rate.	20 per cent. above normal rate.	40 per cent. above normal rate.	Normal rate.	20 per cent. above normal rate.	40 per cent. above normal rate.
1	2	3	4	5	6	7	8	9	10	11	12	13
	S.	S.	S.	S.	S.	S.	S.	S.	S.	S.	S.	S.
Burdwan ...	Burdwan ...	13	10	8	13	10	8	12	10	7	13	10
	Kalna ...	12	10	7	12	10	7	11	9	7	11	9
Birbhum ...	Suri ...	13	10	8	13	10	8	12	10	7	13	10
	Rampurhat ...	15	12	9	14	11	8	12	10	7	12	10
Bankurá ...	Bankura ...	14	11	8	14	11	8	13	10	8	14	11
	Vishnupur ...	14	11	8	14	11	8	12	10	7	13	10
Midnapore ...	Midnapore ...	14	11	8	13	10	8	12	10	7	13	10
	Contai ...	17	14	10	15	12	9	13	10	8	14	11
Hooghly ...	Hooghly ...	10	8	6	11	9	7	10	8	6	10	8
	Arambagh ...	14	11	8	13	10	8	12	10	7	12	10
Howrah ...	Howrah ...	11	9	7	12	10	7	11	9	7	11	9
	Ulubaria ...	11	9	7	12	10	7	11	9	7	11	9
Calcutta ...	Calcutta ...	10	8	6	10	8	6	10	8	6	9	7
24-Parganas ...	Uhetla Hât ...	12	10	7	11	9	7	11	9	7	11	9
	Mugra Hât ...	13	10	8	13	10	8	12	10	7	12	10
Nadia ...	Goari ...	12	10	7	13	10	8	12	10	7	11	9
	Ranaghat ...	11	9	7	11	9	7	11	9	7	11	9
Murshidabad ...	Berhampore ...	13	10	8	13	10	8	12	10	7	12	10
	Kandi ...	15	12	9	14	11	8	13	10	8	14	11
	Jangipore ...	15	12	9	14	11	8	13	10	8	13	10
Jessore ...	Jessore ...	14	11	8	14	11	8	13	10	8	13	10
	Bangaon ...	14	11	8	13	10	8	13	10	8	13	10
Khulna ...	Khulna ...	14	11	8	14	11	8	13	10	8	13	10
	Bagerhat ...	15	12	9	15	12	9	13	10	8	13	10
Rajshahi ...	Rampur-Boalia ...	13	10	8	13	10	8	13		8	13	10
	Nator ...	16	13	10	14	11	8	13	10		14	11
Dinajpur ...	Railway Bazar Hâts	15	12	9	15	12	9	13	10	8	14	11
Jalpaiguri ...	Jalpaiguri ...	14	11	8	13	10	8	12	10	7	11	9
Darjeeling ...	Darjeeling ...	11	9	7	11	9	7	10	8	6	11	9
	Siliguri ...	13	10	8	13	10	8	13	10	7	13	10
Rangpur ...	Rangpur ...	13	10	8	13	10	8	11	9	7	11	9
	Nilphamari ...	15	12	9	14	11	8	12	10	7	12	10
Bogra ...	Bogra	15	12	9	15	12	9	13	10	8	14	11
Pabna ...	Pabna ...	14	11	8	13	10	8	13	10	8	14	11
	Sirajganj ...	14	11	8	13	10	8	13	10	8	12	10
Dacca ...	Dacca ...	14	11	8	13	10	8	12	10	7	13	10
	Mirkadim ...	14	11	8	14	11	8	13	10	8	12	10
Mymensingh ...	Nasirabad ...	14	11	8	13	10	8	12	10	7	13	10
	Netrokona ...	15	12	9	14	11	8	14	11	8	13	10
Faridpur ...	Faridpur ...	13	10	8	12	10	7	12	10	7	13	10
	Goalundo ...	14	11	8	14	11	8	13	10	7	12	10

food-grains for the quinquennial period ending December 1904.

WHEAT (*Triticum sativum.*)												INDIAN CORN OR MAIZE (*Zea mays*).											
For last day or last market day of January.			For last day or last market day of April.			For last day or last market day of July.			For last day or last market day of October.			For last day or last market day of January.			For last day or last market day of April.			For last day or last market day of July.			For last day or last market day of October.		
Normal rate.	20 per cent. above normal rate.	40 per cent. above normal rate.	Normal rate.	20 per cent. above normal rate.	40 per cent. above normal rate.	Normal rate.	20 per cent. above normal rate.	40 per cent. above normal rate.	Normal rate.	20 per cent. above normal rate.	40 per cent. above normal rate.	Normal rate.	20 per cent. above normal rate.	40 per cent. above normal rate.	Normal rate.	20 per cent. above normal rate.	40 per cent. above normal rate.	Normal rate.	20 per cent. above normal rate.	40 per cent. above normal rate.	Normal rate.	20 per cent. above normal rate.	40 per cent. above normal rate.
14	15	16	17	18	19	20	21	22	23	24	25	26	27	28	29	30	31	32	33	34	35	36	37
S.	S.	S.	S.	S.	S.	S.	S.	S.	S.	S.	S.	S.	S.	S.	S.	S.	S.	S.	S.	S.	S.	S.	S.
...	...	...	...	...	...	...	...	...	...	...	...	...	...	...	...	...	...	...	...	...	...	...	...
...	...	...	...	...	...	...	...	...	...	...	...	...	...	...	...	...	...	...	...	...	...	...	...
...	...	...	...	...	...	...	...	...	...	...	...	...	...	...	...	...	...	...	...	...	...	...	...
...	...	...	...	...	...	...	...	...	...	...	...	...	...	...	...	...	...	...	...	...	...	...	...
...	...	...	...	...	...	...	...	...	...	...	...	...	...	...	...	...	...	...	...	...	...	...	...
...	...	...	...	...	...	...	...	...	...	...	...	...	...	...	...	...	...	...	...	...	...	...	...
...	...	...	...	...	...	...	...	...	...	...	...	...	...	...	...	...	...	...	...	...	...	...	...
...	...	...	...	...	...	...	...	...	...	...	...	...	...	...	...	...	...	...	...	...	...	...	...
...	...	...	...	...	...	...	...	...	...	...	...	...	...	...	...	...	...	...	...	...	...	...	...
...	...	...	...	...	...	...	...	...	...	...	...	...	...	...	...	...	...	...	...	...	...	...	...
...	...	...	...	...	...	...	...	...	...	...	...	...	...	...	...	...	...	...	...	...	...	...	...
...	...	...	...	...	...	...	...	...	...	...	...	...	...	...	...	...	...	...	...	...	...	...	...
...	...	...	...	...	...	...	...	...	...	...	...	...	...	...	...	...	...	...	...	...	...	...	...
...	...	...	...	...	...	...	...	...	...	...	...	...	...	...	...	...	...	...	...	...	...	...	...
...	...	...	...	...	...	...	...	...	...	...	...	...	...	...	...	...	...	...	...	...	...	...	...
...	...	...	...	...	...	...	...	...	...	...	...	...	...	...	...	...	...	...	...	...	...	...	...
...	...	...	...	...	...	...	...	...	...	...	...	...	...	...	...	...	...	...	...	...	...	...	...
...	...	...	...	...	...	...	...	...	...	...	...	...	...	...	...	...	...	...	...	...	...	...	...
14	11	8	15	12	9	15	12	9	14	11	8	...	...	...	...	...	...	...	...	...	...	...	...
15	12	9	16	13	10	18	10	8	14	11	8	...	...	...	...	...	...	...	...	...	...	...	...
14	11	8	15	12	9	15	12	9	15	12	9	...	...	...	...	...	...	...	...	...	...	...	...
...	...	...	...	...	...	...	...	...	...	...	...	...	...	...	...	...	...	...	...	...	...	...	...
...	...	...	...	...	...	...	...	...	...	...	...	...	...	...	...	...	...	...	...	...	...	...	...
...	...	...	...	...	...	...	...	...	...	...	...	...	...	...	...	...	...	...	...	...	...	...	...
...	...	...	...	...	...	...	...	...	...	...	...	...	...	...	...	...	...	...	...	...	...	...	...
15	12	9	16	12	9	16	12	9	16	13	10	...	...	...	...	...	...	...	...	...	...	...	...
18	14	11	17	14	10	19	15	11	18	14	11	...	...	...	...	...	...	...	...	...	...	...	...
...	...	...	...	...	...	...	...	...	...	...	...	...	...	...	...	...	...	...	...	...	...	...	...
...	...	...	...	...	...	...	...	...	...	...	...	...	...	...	...	...	...	...	...	...	...	...	...
...	...	...	...	...	...	...	...	...	...	...	...	19	15	11	16	15	10	17	14	10	20	16	12
...	...	...	...	...	...	...	...	...	...	...	...	16	13	10	16	13	10	14	11	8	15	12	9
...	...	...	...	...	...	...	...	...	...	...	...	...	...	...	...	...	...	...	...	...	...	...	...
...	...	...	...	...	...	...	...	...	...	...	...	...	...	...	...	...	...	...	...	...	...	...	...
...	...	...	...	...	...	...	...	...	...	...	...	...	...	...	...	...	...	...	...	...	...	...	...
...	...	...	...	...	...	...	...	...	...	...	...	...	...	...	...	...	...	...	...	...	...	...	...
...	...	...	...	...	...	...	...	...	...	...	...	...	...	...	...	...	...	...	...	...	...	...	...
...	...	...	...	...	...	...	...	...	...	...	...	...	...	...	...	...	...	...	...	...	...	...	...
...	...	...	...	...	...	...	...	...	...	...	...	...	...	...	...	...	...	...	...	...	...	...	...
...	...	...	...	...	...	...	...	...	...	...	...	...	...	...	...	...	...	...	...	...	...	...	...
...	...	...	...	...	...	...	...	...	...	...	...	...	...	...	...	...	...	...	...	...	...	...	...
...	...	...	...	...	...	...	...	...	...	...	...	...	...	...	...	...	...	...	...	...	...	...	...
...	...	...	...	...	...	...	...	...	...	...	...	...	...	...	...	...	...	...	...	...	...	...	...

District and Mart.	Common rice (*Mota chaul*).											
	For last day or last market day of January.			For last day or last market day of April.			For last day or last market day of July.			For last day or last market day of October.		
	Normal rate.	20 per cent. above normal rate.	40 per cent. above normal rate.	Normal rate.	20 per cent. above normal rate.	40 per cent. above normal rate.	Normal rate.	20 per cent. above normal rate.	40 per cent. above normal rate.	Normal rate.	20 per cent. above normal rate.	40 per cent. above normal rate.
1	2	3	4	5	6	7	8	9	10	11	12	13
	S.	S.	S.	S.	S.	S.	S.	S.	S.	S.	S.	S.
Backergunge ... { Barisal ...	12	10	7	13	10	8	12	10	7	12	10	7
Pirojpur ...	11	9	7	12	10	7	11	9	7	12	10	7
Tippera ... { Comilla ...	14	11	8	13	10	8	12	10	7	13	10	8
Chandpur ...	15	12	9	13	10	8	13	10	8	13	10	8
Noakhali ... { Kalitara Hát ...	15	12	9	13	10	8	13	10	8	14	11	8
Fenny Hát ...	16	13	10	14	11	8	13	10	8	15	12	9
Chittagong ... { Chittagong ...	14	11	8	13	10	8	13	10	8	13	10	7
Cox's Bazar ...	14	11	8	14	11	8	13	10	8	13	10	8
Patna ... { Patna ...	15	12	9	14	11	8	13	10	8	15	12	9
Bihar ...	13	10	8	12	10	7	11	9	7	11	9	7
Gaya ... { Gaya ...	13	10	8	12	10	7	12	10	7	12	10	7
Aurangabad ...	14	11	8	14	11	8	12	10	7	13	10	8
Shahabad ... { Arrah ...	13	10	8	12	10	7	12	10	7	13	10	8
Buxar ...	15	12	9	13	10	8	13	10	8	13	10	8
Saran ... { Chapra ...	14	11	8	14	11	8	13	10	8	14	11	8
Siwan ...	14	11	8	13	10	8	13	10	8	14	11	8
Champaran ... { Motiharhi ...	15	12	9	14	11	8	13	10	8	17	14	10
Bettiah ...	16	13	10	15	12	9	14	11	8	17	14	10
Muzaffarpur ... { Muzaffarpur ...	13	10	8	13	10	8	12	10	7	13	10	8
Sitamarhi ...	15	12	9	14	11	8	12	10	7	14	11	8
Darbhanga ... { Darbhanga ...	15	12	9	14	11	8	13	10	8	15	12	9
Madhubani ...	16	13	10	15	12	9	13	10	8	14	11	8
Monghyr ... { Monghyr ...	13	10	8	12	10	7	11	9	7	12	10	7
Jamui ...	14	11	8	13	10	8	11	9	7	12	10	7
Bhagalpur ... { Bhagalpur ...	14	11	8	14	11	8	12	10	7	12	10	7
Supaul ...	18	14	11	16	13	10	15	12	9	16	13	10
Purnea ... { Kasba ...	14	11	8	14	11	8	13	10	8	13	10	8
Kishenganj ...	15	12	9	14	11	8	13	10	8	11	9	7
Malda ... { Malda ...	14	11	8	14	11	8	12	10	7	13	10	8
Balia Nawabganj ...	15	12	9	15	12	9	13	10	8	15	12	9
Sonthal Parganas. { Dumka ...	14	11	8	14	11	8	13	10	8	13	10	8
Deoghur ...	14	11	8	13	10	8	12	10	7	12	10	7
Cuttack ... { Cuttack ...	16	13	10	16	13	10	14	11	8	15	12	9
Jajpur ...	17	14	10	16	13	10	14	11	8	16	13	10
Balasore ... { Balasore ...	16	13	10	15	12	9	13	10	8	15	12	9
Bhadrak ...	18	14	11	17	14	10	16	13	10	16	13	10
Angul ... Angul ...	20	16	12	18	14	11	16	13	10	17	14	10
Puri ... { Puri ...	17	14	10	16	13	10	14	11	8	16	13	10
Khurda ...	17	14	10	16	13	10	14	11	8	15	12	9
Hazaribagh ... Hazaribagh ...	13	10	8	12	10	7	12	10	7	14	11	8
Ranchi ... Ranchi ...	14	11	8	13	10	8	12	10	7	14	11	8
Palamau ... Daltonganj ...	14	11	8	12	10	7	11	9	7	13	10	8
Manbhum ... Purulia ...	13	10	8	14	11	8	12	10	7	13	10	8
Singhbhum ... Chaibassa ...	16	13	10	14	11	8	13	10	8	15	12	9

WHEAT (*Triticum sativum*).												INDIAN CORN OR MAIZE (*Zea mays*).											
For last day or last market day of January.			For last day or last market day of April.			For last day or last market day of July.			For last day or last market day of October.			For last day or last market day of January.			For last day or last market day of April.			For last day or last market day of July.			For last day or last market day of October.		
Normal rate.	20 per cent. above normal rate.	40 per cent. above normal rate.	Normal rate.	20 per cent. above normal rate.	40 per cent. above normal rate.	Normal rate.	20 per cent. above normal rate.	40 per cent. above normal rate.	Normal rate.	20 per cent. above normal rate.	40 per cent. above normal rate.	Normal rate.	20 per cent. above normal rate.	40 per cent. above normal rate.	Normal rate.	20 per cent. above normal rate.	40 per cent. above normal rate.	Normal rate.	20 per cent. above normal rate.	40 per cent. above normal rate.	Normal rate.	20 per cent. above normal rate.	40 per cent. above normal rate.
14	15	16	17	18	19	20	21	22	23	24	25	26	27	28	29	30	31	32	33	34	35	36	37
S.	S.	S.	S.	S.	S.	S.	S.	S.	S.	S.	S.	S.	S.	S.	S.	S.	S.	S.	S.	S.	S.	S.	S.
...	...	...	...	...	...	...	...	...	...	...	...	...	...	...	...	...	...	...	...	...	...	...	...
...	...	...	...	...	...	...	...	...	...	...	...	...	...	...	...	...	...	...	...	...	...	...	...
...	...	...	...	...	...	...	...	...	...	...	...	...	...	...	...	...	...	...	...	...	...	...	...
...	...	...	...	...	...	...	...	...	...	...	...	...	...	...	...	...	...	...	...	...	...	...	...
...	...	...	...	...	...	...	...	...	...	...	...	...	...	...	...	...	...	...	...	...	...	...	...
...	...	...	...	...	...	...	...	...	...	...	...	...	...	...	...	...	...	...	...	...	...	...	...
...	...	...	...	...	...	...	...	...	...	...	...	...	...	...	...	...	...	...	...	...	...	...	...
...	...	...	...	...	...	...	...	...	...	...	...	...	...	...	...	...	...	...	...	...	...	...	...
15	12	9	14	11	8	15	12	9	15	12	9	23	18	14	24	19	14	21	7	13	28	18	14
12	10	7	13	10	8	13	10	8	13	10	8	20	16	12	20	16	12	18	14	11	20	16	12
14	11	8	14	11	8	14	11	8	14	11	8	21	17	13	20	16	12	19	15	11	21	17	13
14	11	8	17	14	10	15	12	9	16	13	10	24	19	14	23	18	14	16	13	10	21	17	13
13	10	8	14	11	8	13	10	8	14	11	8	22	18	13	19	15	11	...	...	...	21	17	13
13	10	8	14	11	8	14	11	8	14	11	8	22	18	13	23	18	14	17	14	10	23	18	13
14	11	8	14	11	8	14	11	8	14	11	8	2	18	13	23	18	13	19	15	11	24	19	14
13	10	8	14	11	8	14	11	8	14	11	8	22	18	13	22	18	13	19	15	11	25	20	15
14	11	8	14	11	8	12	10	7	15	12	9	24	19	14	24	19	14	22	18	13	26	21	16
16	13	10	17	14	10	16	13	10	16	13	10	25	20	15	24	19	14	24	19	14	28	22	17
13	10	8	13	10	8	13	10	8	14	11	8	23	18	13	21	17	13	20	16	12	24	19	14
14	11	8	15	12	9	16	13	10	15	12	9	25	20	15	26	21	16	21	17	13	29	23	17
14	11	8	15	12	9	15	12	9	15	12	9	22	18	13	23	18	14	21	17	13	26	21	16
14	11	8	16	13	10	15	12	9	14	11	8	24	19	14	25	20	15	22	18	13	30	24	18
14	11	8	16	13	10	15	12	9	15	12	9	22	18	13	21	17	13	19	15	11	25	20	15
13	10	8	14	11	8	14	11	8	14	11	8	23	18	14	21	17	13	18	14	11	23	18	14
12	10	7	14	11	8	14	11	8	14	11	8	21	17	13	20	16	12	17	14	10	23	18	14
17	14	10	17	14	10	17	14	10	16	13	10	...	...	...	...	...	...	...	...	...	...	...	...
...	...	...	...	...	...	...	...	...	...	...	...	...	...	...	...	...	...	...	...	...	...	...	...
...	...	...	...	...	...	...	...	...	...	...	...	...	...	...	...	...	...	...	...	...	...	...	...
...	...	...	...	...	...	...	...	...	...	...	...	...	...	...	...	...	...	...	...	...	...	...	...
11	9	7	11	9	7	12	10	7	12	10	7	20	16	12	20	16	12	17	14	10	21	17	13
11	9	7	10	8	6	10	8	6	11	9	7	22	18	13	20	16	12	19	15	11	25	20	15
...	...	...	...	...	...	...	...	...	...	...	...	...	...	...	...	...	...	...	...	...	...	...	...
...	...	...	...	...	...	...	...	...	...	...	...	...	...	...	...	...	...	...	...	...	...	...	...
...	...	...	...	...	...	...	...	...	...	...	...	...	...	...	...	...	...	...	...	...	...	...	...
...	...	...	...	...	...	...	...	...	...	...	...	...	...	...	...	...	...	...	...	...	...	...	...
...	...	...	...	...	...	...	...	...	...	...	...	...	...	...	...	...	...	...	...	...	...	...	...
...	...	...	...	...	...	...	...	...	...	...	...	...	...	...	...	...	...	...	...	...	...	...	...
...	...	...	...	...	...	...	...	...	...	...	...	...	...	...	...	...	...	...	...	...	...	...	...
...	...	...	...	...	...	...	...	...	...	...	...	...	...	...	...	...	...	...	...	...	...	...	...
...	...	...	...	...	...	...	...	...	...	...	...	19	16	11	16	13	10	15	12	9	22	18	13
...	...	...	...	...	...	...	...	...	...	...	...	...	...	...	...	...	...	...	...	...	...	...	...
...	...	...	...	...	...	...	...	...	...	...	...	21	17	13	19	15	11	16	13	10	23	18	13
...	...	...	...	...	...	...	...	...	...	...	...	21	17	13	21	17	13	...	...	...	25	20	15
...	...	...	...	...	...	...	...	...	...	...	...	19	15	11	...	...	...	...	...	...	...	...	...

Explanation sheet attached to schedule of normal rates of prices prepared by the Department of Land Records and Agriculture, Bengal.

[*N.B.*—The schedule shows the retail prices of common rice in respect of all districts, of wheat in respect of the districts of the Patna Division, Murshidabad, Rajshahi, Monghyr, Bhagalpur and the Sonthal Parganas, and of maize in respect of the districts of the Patna Division, Darjeeling, Monghyr, Bhagalpur, the Sonthal Parganas, Hazaribagh, Palamau, Manbhum and Singhbhum.

No rates are shown in the schedule which are not the average of at least two quotations for the same month in different years.]

Burdwan.—Prices of rice at Kalna are not reported for January and April 1902.

Birbhum.—Quotations of prices for rice at Rampurhât are not available for July 1901 and for October of 1903 and 1904.

Hooghly.—The price of rice at the Arambagh mart not being reported for April 1902, average of four years has been given in the schedule.

Murshidabad.—Prices of rice and wheat at Kandi are not reported for April and July quarters of 1901 and for July 1902.

Darjeeling.—The price of rice at Siliguri for October 1901 and the prices of maize for October 1900 and July 1901 are not furnished.

Rangpur.—The price of rice for the Nilphamari mart is not given in the return of January 1902.

Dacca.—The figures of the Munshirhat mart not being available those of the Mirkadim mart have been shown instead.

Chittagong.—The price of rice at Cox's Bazar is not available for January 1904.

Patna.—Prices of maize at Sadar for April and July 1901 are not furnished. The prices of rice and wheat at Bihar for April 1901 and those of maize for January, April and July of 1900 and for July 1903 are not available.

Gaya.—Prices of maize at Sadar for the first three quarters of 1900 are not furnished. Those of rice and wheat at Aurangabad for October 1900 and for April 1901 are not reported, while figures for maize for the latter mart are very incomplete. For January average of three years, and for October average of four years have been shown, while for April and July averages of two years only have been given in the schedule.

Shahabad.—Prices of rice and wheat at Arrah are not reported for October 1900. Quotations of prices for maize are not regularly reported. The figures for January and October are forthcoming for the last four years. For April they are available only for two years (1901 and 1902) while figures for July quarter are not available at all. The prices of maize at Arrah for April and July are available for two years only (1901 and 1902).

Champaran.—Prices of rice and wheat at Sadar are not reported for October 1901; those of maize are not available for July and October 1901 and October 1904 for the Sadar mart and for July 1900 for the Bettiah mart.

Darbhanga.—The price of maize at Sadar for July 1901 is not furnished. Prices of rice, wheat and maize at Madhubani are not available for January 1901 and for October 1900.

Monghyr.—The prices of maize at Sadar are not available for the first three quarters of 1900 and also for January 1903. The figures for maize for the Jamui mart are forthcoming for the last three years. The figures for October are, however, available for the last four years

Bhagalpur.—The price of maize at Sadar is not reported for October 1900. The figures for the Supaul mart are not available for the whole of the quinquennial period 1900—1904.

Purnea.—The price of rice at Kasba for October 1901 is not furnished.

Sonthal Parganas.—The price of maize at Sadar is not reported for April 1900. The prices of wheat at Deoghur are not forthcoming for the last three years, hence average of two years (1900-1901) only has been shown in the schedule.

Cuttack.—Prices of rice at Jajpur are not available for April and July 1904.

Angul.—Quotations of prices of rice are available for the last three years only (1902—1904).

Hazaribagh.—The Giridih mart has been omitted from the schedule, quotations thereof not being available for the whole of the quinquennial period of 1900 to 1904.

Palamau.—The price of maize at Sadar is not reported for July 1900.

Manbhum.—The prices of maize for July quarter of the quinquennial period 1900—1904 are not available for the Purulia mart.

Singhbhum.—The price of rice at Chaibassa for January 1902 is not furnished.

DEPARTMENT OF LAND RECORDS AND AGRICULTURE, BENGAL,
The 13th May 1905.

DECLARATION.

No. 744T.R.—The 15th May 1905.—Whereas it appears to the Lieutenant-Governor of Bengal that land is required to be taken by Government at the expense of the Barasat-Basirhat Light Railway Company, Limited, for the purpose of a railway station at Basirhat, in the village of Basirhat, pargana Belia, zilla 24-Parganas, it is hereby declared that for the above purpose two pieces of land, measuring, more or less, 18 cottahs 6 chitaks 10 square feet of standard measurement, bounded as follows, are required within the aforesaid village of Basirhat :—

24-Parganas.

Plot A.—On the north by the remaining portion of land belonging to Girindra Nath Roy Choudhury and Upendra Nath Shaw, on the east by the remaining portion of land belonging to Girindra Nath Roy Choudhury, on the south by the land belonging to the Barasat-Basirhat Light Railway Company, Limited, and on the west by the remaining portion of land belonging to Upendra Nath Shaw.

Plot B.—On the north by the land of the Barasat-Basirhat Light Railway Company, Limited, on the east, south and west by the remaining portion of the land belonging to Upendra Nath Shaw.

This declaration is made, under the provisions of section 6 of Act I of 1894, to all whom it may concern.

A plan of the land may be inspected in the office of Messrs. Martin and Company, Calcutta.

R. W. CARLYLE,
Offg. Chief Secy. to the Govt. of Bengal.

DECLARATION.

No. 856T.R.—The 22nd May 1905.—Whereas it appears to the Lieutenant-Governor of Bengal that land is required to be taken by Government at the expense of the Bengal-Nagpur Railway Company for the construction of Deolti flag-station on the Sini-Midnapore-Cuttack-Calcutta Extension in the villages of Kamola Chak and Deolti, pargana Mundalghat, zilla Howrah, it is hereby declared that for the above purpose a piece of land measuring, more or less, 3 roods 34 poles, being equivalent to 2 bighas 18 cottahs and 5 chitaks of standard measurement, is required within the aforesaid villages of Kamola Chak and Deolti.

Howrah.

This declaration is made, under the provisions of section 6 of Act I of 1894, to all whom it may concern.

A plan of the land may be seen in the office of the District Engineer, Calcutta district, Bengal-Nagpur Railway, 18 Garden Reach Road, Calcutta.

R. W. CARLYLE,
Offg. Chief Secy. to the Govt. of Bengal.

DECLARATION.

No. 868T.R.—The 22nd May 1905.—Whereas it appears to the Lieutenant-Governor of Bengal that land is required to be taken by Government at the expense of the East Indian Railway Company for a public purpose, viz., for the East Indian Railway Company's zone of safety for sanitary purposes at Lillooah Station, in the village of Belur, tahsil Boroe, district Hooghly, it is hereby declared that for the above purpose two pieces of land measuring in all, more or less, 72 bighas 17 cottahs and 8 chitaks of standard measurement (corresponding to 24·09 acres), bounded as stated below, are required within the aforesaid village of Belur :—

Hooghly.

Plot B.—North by Pran Kristo Chatterjee's Lane, south by Dakhin Para Lane, east by Joy Krishna Gangooly's Lane, and west by the East Indian Railway Company's zone of safety land which is under acquisition.

Plot C.—North by the East Indian Railway Company's zone of safety land which is under acquisition, south by the land of Babu Notobar Sirkar, Hari Charan Banerjee, Sam Mullick, Fakir Chand Sheikh, Diljan Bibi, Kedar Ali, Johur Sheikh, and Mojahar Mullick, east by Mali Panchjhara Lane, and west by the East Indian Railway Company's recreation ground.

Mines of coal, iron-stone, slate or other minerals lying under the land, except only such parts of the mines and minerals as it may be necessary to dig or carry away, or use in the construction of the work for the purpose of which the land is being acquired, are not needed.

This declaration is made, under the provisions of section 6, Act I of 1894, and section 3, clause (*l*), Act XVIII of 1885, to all whom it may concern.

A plan of the land may be inspected in the office of the Collector of Howrah, Land Acquisition Department, and in that of the District Engineer, East Indian Railway, at Howrah—

Plot No.	Sheet No.	Name of village.	Area.	Total.
			B. C. CH.	B. C. CH.
C ...	3	Belur	30 6 5	.....
C ...	4	Do.	13 1 6	43 7 11
B ...	4	Do.	29 9 13	29 9 13
		GRAND TOTAL ...	.....	72 17 8

R. W. CARLYLE,
Offg. Chief Secy. to the Govt. of Bengal.

DECLARATION.

No. 921T.R.—The 25th May 1905.—Whereas it appears to the Lieutenant-Governor of Bengal that land is required to be taken by Government at the public expense for a public purpose, viz, for the construction of a subsidiary jail and the buildings pertaining thereto, in the village of Bhabdepur, pargana Mahila, zilla Muzaffarpur, it is hereby declared that for the above purpose a piece of land measuring, more or less, 7 bighas 17 cottahs of standard measurement, bounded on the north by Babu Bishundeo Singh's *putti* and the fields of Nath Singh and Mussamut Mahudri, on the south by public road, on the east by the compound of the Subdivisional Mukhtarkhana, and on the west by the compound of the Charitable Dispensary, is required office and within the aforesaid village of Bhabdepur

Muzaffarpur.

This declaration is made, under the provisions of section 6 of Act I of 1894, to all whom it may concern, and is published in modification of Declaration No. 758P.D., dated the 25th June 1904, published at page 950, Part I of the *Calcutta Gazette* of the 29th idem.

A plan of the land may be inspected in the office of the Executive Engineer, Muzaffarpur.

R. W. CARLYLE,
Offg. Chief Secy. to the Govt. of Bengal.

DECLARATION.

No. 924T.R.—The 25th May 1905.—Whereas it appears to the Lieutenant-Governor of Bengal that land is required to be taken by Government at the public expense for a public purpose, viz., for the extension of the Foundry and Shell Factory at Cossipore, in the village of Cossipore, pargana Calcutta, zilla 24-Parganas, it is hereby declared that for the above purpose a piece of land measuring, more or less, 10 bighas 10 cottahs of standard measurement, bounded on the north by premises No. 3 Jheel Road, on the east by Jheel Road, on the south by premises Nos. 5 and 6 Jheel Road, and on the west by River Hooghly, is required within the aforesaid village of Cossipore.

24-Parganas.

This declaration is made, under the provisions of section 6 of Act I of 1894, to all whom it may concern.

A plan of the land may be inspected in the office of the Commanding Royal Engineer, Ishapore Factory District.

R. W. CARLYLE,
Offg. Chief Secy. to the Govt. of Bengal.

DECLARATION.

No. 958T.R.—The 27th May 1905.—Whereas it appears to the Lieutenant-Governor of Bengal that land is required to be taken by Government at the public expense for a public purpose, viz., for the diversion cut of the Rania khal, in the villages of Rania and Sanamoi, pargana Kalindi Balisai, zilla Midnapore, it is hereby declared that for the above purpose a piece of land measuring, more or less, 6 bighas and 2 chitaks of standard measurement, bounded on the north and south by the Jalpai lands of mauzas Rania and Sanamoi, and on the east and west by the Rania khal, is required within the aforesaid villages of Rania and Sanamoi.

Midnapore.

This declaration is made, under the provisions of section 6, Act I of 1894, to all whom it may concern.

A plan of the land may be inspected in the office of the Land Acquisition Deputy Collector of Contai.

R. W. CARLYLE,
Offg. Chief Secy. to the Govt. of Bengal.

DECLARATION.

No. 959T.R.—The 27th May 1905.—Whereas it appears to the Lieutenant-Governor of Bengal that land is required to be taken by Government at the expense of the East Indian Railway Company for a public purpose, viz, for raised platforms, waiting shed and foot overbridge at Mankundu Station of the East Indian Railway, in the village of Mankundu, tahsil Boroe, zilla Hooghly, it is hereby declared that for the above purpose a piece of land measuring, more or less, 4 bighas 3 cottahs and 5 33 chitaks of standard measurement (corresponding to 1 38 acres) bounded on the north by the tenanted land of Babu Gour Hari Khan, thatched huts of Woomesh Bagdi, Karuna Bagdi, Johori Bagdi and waste land of Babu Jogendra Nath Khan; on the west by the tank and waste land of Babu Jogendra Nath Khan, thatched hut of Protap Doola and mango tope of Chandi Charan Ghose (Mondol); on the south by mango tope of Chandi Charan Ghose (Mondol) and borrow-pit, and on the east by the East Indian Railway Company's land, is required within the aforesaid village of Mankundu.

Hooghly.

Mines of coal, iron-stone, slate or other minerals lying under the land, except only such parts of the mines and minerals as it may be necessary to dig or carry away, or use in the construction of the work for the purpose of which the land is being acquired, are not needed.

This declaration is made, under the provisions of section 6, Act I of 1894, and section 3, clause (1), Act XVIII of 1885, to all whom it may concern.

A plan of the land may be inspected in the office of the Hooghly Collectorate and that of the District Engineer, East Indian Railway, Howrah.

R. W. CARLYLE,
Offg. Chief Secy. to the Govt. of Bengal.

FINANCIAL DEPARTMENT.

NOTIFICATION.

No. 201T.O.—The 27th May 1905.—Mr. J. E. Vaughan, Assistant Opium Agent, attached to the Benares Opium Agency, is granted privilege leave for six weeks, with effect from the 1st June 1905, or any subsequent date on which he may avail himself of it.

Benares Agency.

E. A. GAIT,
Offg. Secy. to the Govt. of Bengal.

MEDICAL DEPARTMENT.

No. 694T.M.—The 24th May 1905.—Under section 2, Act XXXVI of 1858, the Lieutenant-Governor appoints Assistant Surgeon Satis Chandra De, Teacher of Medicine, Cuttack Medical School, to be a Visitor of the Lunatic Asylum at Cuttack.

Cuttack.

No. 706T.M.—The 23rd May 1905.—Lieutenant H. E. Smith, I. M. S., Regimental Medical Officer, Buxa Duars, is appointed to have medical charge of the civil station of Buxa, Alipur Duars Subdivision, in the district of Jalpaiguri, in addition to his own duties, with effect from the afternoon of the 27th April 1905, *vice* Captain J. Davidson, I.M.S.

Jalpaiguri.

No. 756T.M.—The 26th May 1905.—Assistant Surgeon Gopal Chandra Mukherjee acted as Deputy Sanitary Commissioner, Western Bengal Circle, in additionto his own duty in connection with anti-cholera inoculation, from the forenoon of the 3rd to the afternoon of the 16th March 1905.

No. 799T.M.—The 27th May 1905.—Dr. R. S. Ashe, M.B., Civil Surgeon stationed at Faridpur, is allowed privilege leave for one month, under article 260 of the Civil Service Regulations, with effect from the 26th May 1905, or any subsequent date on which he avails himself of it.

Faridpur.

E. A. GAIT,
Offg. Secy. to the Govt. of Bengal.

NOTIFICATION.

No. 190T.—P.—The 27th May 1905.—In exercise of the powers conferred by section 2 of the Epidemic Diseases Act, III of 1897, and by the notification of the Government of India, in the Home Department, No. 302, dated the 4th February 1897, issued thereunder, the Lieutenant-Governor is pleased to direct that the following rule shall be added as clause (2) of Rule 6 of Plague Regulation No. 14, dated the 25th April 1899, as modified by notification No. 154T.—P., dated 25th May 1901:—

Clause (2).—If after a Bill of Health has been given to the Master of any vessel, and before the vessel proceeds to sea, any cargo or goods of any kind be placed on, or taken off, the vessel, the vessel shall not proceed below Diamond Harbour until

(*a*) such further medical examination and disinfection as the Health Officer may consider necessary have been made, and

(*b*) a fresh Bill of Health has been given to the Master of the vessel:

Provided that such further examination and disinfection may be conducted on board the vessel.

E. A. GAIT,
Offg. Secy. to the Govt. of Bengal.

JUDICIAL DEPARTMENT.

No. 2876A.

APPOINTMENTS AND TRANSFERS.

No. 1098A.D.—The 27th May 1905.—Babu Surja Moni De, B.L., is appointed to act as a Munsif in the district of Tippera, to be ordinarily stationed at Comilla, during the absence, on leave, of Babu Asutosh Banerjee (No. 1), or until further orders.

Tippera.

No. 1102A.D.—The 27th May 1905.—The services of Babu Aditya Chandra Chakravarti, late Officiating Subordinate Judge, Jessore, are placed temporarily at the disposal of the Hon'ble the Chief Commissioner of Assam.

Jessore. Assam.

No. 1112A.D.—The 27th May 1905.—Babu Kunja Behary Ballav, M.A., B.L., is appointed to act as a Munsif in the district of Nadia, to be ordinarily stationed at Meherpur, during the absence, on leave, of Babu Mohendra Nath Dutt, or until further orders.

Nadia.

No. 1143A.D.—The 27th May 1905.—Maulvi Abdul Bari, Subordinate Judge, Hooghly, is appointed to act as Small Cause Court Judge, Howrah, Hooghly and Serampore, in the district of Hooghly, during the absence, on leave, of Babu Bhuban Mohun Ghose, or until further orders, and is vested with the powers of a Subordinate Judge.

Hooghly.

No. 1145A.D.—The 27th May 1905.—Babu Nikunja Bihari Roy, Munsif, Hooghly, is appointed to act as Subordinate Judge of the same district, during the absence, on deputation, of Maulvi Abdul Bari, or until further orders.

Hooghly.

No. 1147A.D.—The 27th May 1905.—Babu Nisi Kanta Guha, M.A., B.L., is appointed to act as a Munsif in the district of Hooghly, to be ordinarily stationed at the Sadar station, during the absence, on deputation, of Babu Nikunja Bihari Roy, or until further orders.

Hooghly.

No. 1168A.D.—The 29th May 1905.—Babu Kunja Behari Biswas, Munsif of Bangaon, in the district of Jessore, is appointed to be a Munsif in the same district, to be ordinarily stationed at Magura, and is vested with the powers of a Judge of a Court of Small Causes for the trial of suits cognizable by such a Court up to the value of Rs. 100, and with the functions of a District Court, under section 26, sub-section (1), of Act VII of 1889, within the local limits of the Magura Munsifi.

Jessore.

No. 1170A.D.—The 29th May 1905.—Babu Hemendra Lal Singh, Munsif of Magura, in the district of Jessore, on leave, is appointed to be a Munsif in the same district, to be ordinarily stationed at Bangaon.

Jessore.

No. 1172A.D.—The 29th May 1905.—Babu Bakulal Biswas, B.L., is appointed to act as a Munsif in the district of Jessore, to be ordinarily stationed at Bangaon, during the absence, on leave, of Babu Hemendra Lal Singh, or until further orders.

Jessore.

LEAVE.

No. 1174A.D.—The 29th May 1905.—Babu Pran Krishna Biswas, Subordinate Judge, Faridpur, is allowed leave for one month, under article 271 of the Civil Service Regulations, in extension of the leave granted to him under the order of the 10th April 1905.

Faridpur.

No. 2874A.—The 26th May 1905.—Babu Binode Behari Mitter, Munsif of Narayanganj, in the district of Dacca, is allowed leave for twenty nine days, under article 271 of the Civil Service Regulations, with effect from the 5th June 1905.

Dacca.

The 26th May 1905.—Babu Rama Prasad Moitra, Munsif of Bankura, is allowed leave for twenty one days, under article 271 of the Civil Service Regulations, with effect from the 2nd June 1905, or from the date on which he may be relieved.

Bankura.

The 26th May 1905.—Babu Tulsi Das Mukerjee, Munsif of Patuakhali, in the district of Backergunge, is allowed leave for one month, under article 272 of the Civil Service Regulations, with effect from the 6th June 1905 or from the date on which he may be relieved.

Backergunge.

POWERS.

No. 1089A.D.—The 26th May 1905.—Babu Ambica Charan Dutta, Officiating Subordinate Judge, Backergunge, is vested with the powers conferred on District Judges, under sections 344 to 359 (both inclusive) of the Code of Civil Procedure, in regard to cases arising within the local limits of the district of Backergunge.

Backergunge.

No. 1100A.D.—The 27th May 1905.—Babu Koomud Nath Mookerjee, Deputy Magistrate, Bhagalpur, is vested with powers under sections 133, 143, 144, 174, 186, 190 (1) (*c*) and 524 of the Code of Criminal Procedure.

Bhagalpur.

No. 1108A.D.—The 27th May 1905.—In exercise of the power conferred by sub-section (1) of section 565 of the Code of Criminal Procedure, 1898, the Lieutenant-Governor is pleased to empower Babu Jnan Sankar Sen, a Magistrate of the first class, in the district of Howrah, to order, at the time of passing sentence of imprisonment on any person referred to in that sub-section, that the residence or change of residence of such person after release shall be notified as provided by the rules made under sub-section (3) of the section.

Howrah.

No. 1110A.D.—The 27th May 1905.—Babu Jyotis Chandra Acharyya, Deputy Magistrate, Cuttack, is vested with the power to try summarily the offences mentioned in section 260 of the Code of Criminal Procedure.

Cuttack.

R. W. CARLYLE,
Offg. Chief Secy. to the Govt. of Bengal.

APPOINTMENTS AND TRANSFERS.

No. 1528J.D.—The 27th May 1905.—Babu Amrit Lal Chatterjee is appointed to be an Honorary Magistrate of the Purulia Independent Bench, in the district of Manbhum.

Manbhum.

No. 1501J.D.—The 27th May 1905.—Babu Ashutosh Bukhshi is reappointed to be an Honorary Magistrate of the Madhipura Independent Bench in the district of Bhagalpur.

Bhagalpur.

No. 1596J.D.—The 29th May 1905.—Babu Akshay Kumar Guha is appointed to be an Honorary Magistrate of the Bhanga Independent Bench in the district of Faridpur.

Faridpur.

RESIGNATION.

No. 1375J.D.—The 24th May 1905.—The Lieutenant-Governor accepts the resignation tendered by Mr John Robertson of his appointment as an Honorary Magistrate at Burdwan.

Burdwan.

No. 1377J.D.—The 24th May 1905.—The Lieutenant-Governor accepts the resignation tendered by Babu Kali Das Mallik of his appointment as an Honorary Magistrate of the Sadar Independent Bench, in the district of Burdwan.

Burdwan.

No. 1508J.D.—The 27th May 1905.—The Lieutenant-Governor accepts the resignation tendered by Babu Devendra Nath Roy of his appointment as an Honorary Magistrate of the Berhampore Independent Bench in the district of Murshidabad.

Murshidabad.

No. 1594J.D.—The 29th May 1905.—The Lieutenant-Governor accepts the resignation tendered by Maulvi Abdul Goffur of his appointment as an Honorary Magistrate of the Shahzadpur Independent Bench, in the district of Pabna.

Pabna.

POWERS.

No. 1373J.D.—The 24th May 1905.—Under the authority vested in him by section 357, sub-section (2) of the Code of Criminal Procedure, Act V of 1898, the Lieutenant-Governor empowers Babu Jages Charan Sen, an Honorary Magistrate of the Sadar Independent Bench, in the district of Murshidabad, to take down evidence in criminal cases in the English language.

Murshidabad.

No. 1502J D.—The 27th May 1905.—Babu Ashutosh Bukhshi, who has been re-appointed to be an Honorary Magistrate of the Madhipura Independent Bench, in the district of Bhagalpur, is vested with the powers of a Magistrate of the third class.

Bhagalpur.

He is also empowered to take down evidence in criminal cases in the English language.

No. 1529J D.—The 27th May 1905.—Babu Amrit Lal Chatterjee, who has been appointed to be an Honorary Magistrate of the Purulia Independent Bench in the district of Manbhum, is vested with the powers of a Magistrate of the third class.

Manbhum.

No. 1597J.D.—The 29th May 1905.—Babu Akshay Kumar Guha, who has been appointed to be an Honorary Magistrate of the Bhanga Independent Bench, in the district of Faridpur, is vested with the powers of a Magistrate of the third class.

Faridpur.

H. W. C. CARNDUFF,
Offg. Secy. to the Govt. of Bengal.

NOTIFICATIONS.

No. 1409J.D.—The 26th May 1905.—Under section 3, Act I (B.C.) of 1876 (an Act to provide for the voluntary registration of Muhammadan marriages and divorces), the Lieutenant-Governor has been pleased to grant a license to Maulvi Efazuddin Ahmed, authorizing him to register Muhammadan marriages and divorces, and to exercise the other functions of a Muhammadan Registrar within the police-stations of Thakurgaon, Pirganj, Ranisankail and Birganj, in the district of Dinajpur.

Dinajpur.

No. 1410J.D.—The 26th May 1905.—Under section 2, Act XII of 1880 (an Act for the appointment of persons to the office of Kazi), the Lieutenant-Governor has been pleased to grant a sanad (license) to Maulvi Efazuddin Ahmed, appointing him Kazi of thanas Thakurgaon, Pirganj, Ranisankail and Birganj, in the district of Dinajpur, for the celebration of marriages and the performance of other rites and ceremonies, when application is made to him to perform any such functions.

Dinajpur.

No. 1411J.D.—The 26th May 1905.—Babu Roma Prosad Mallik is re-appointed to be a non-official visitor of the Rampur Boalia Central Jail.

Rajshahi.

No. 1412J.D.—The 26th May 1905.—The following gentlemen are appointed to be non-official visitors of the Rampur Boalia Central Jail:—

Rajshahi.

1. Babu Bhuban Mohan Moitra.
2. „ Kishori Mohan Chowdhuri.
3. „ Shashadhor Roy, M.A., B.L.
4. Babu Mohendra Nath Sha Chowdhuri, B.L.
5. „ Surendra Nath Bagchi.
6. „ Chandra Nath Chowdhuri, L.M.S.

No. 1564J.D.—The 27th May 1905.—The Government Notification No. 2990J., dated the 1st April 1905, published in Part I, pages 615 and 616 of the *Calcutta Gazette* of the 5th idem, so far as it relates to the investment of Babu Raj Kumar Sen Gupta as President of the panchayat of the Pachgaon Union, in the Munshiganj police-station of the district of Dacca, with the powers of a Magistrate under sections 64, 127 and 128 of the Code of Criminal Procedure, is hereby cancelled.

Dacca.

No. 1565J.D.—The 27th May 1905.—In exercise of the power vested in him by section 14, sub-section (1), of the Code of Criminal Procedure, 1898, the Lieutenant-Governor is pleased to confer upon Babu Durga Kumar Das Gupta, who has been appointed as President of the panchayat of the Pachgaon Union in the Munshiganj police-station of the district of Dacca, *vice* Babu Raj Kumar Sen Gupta, the powers of a Magistrate under sections 64, 127, and 128 of the same Code, and to declare that the said powers may be exercised by the said officer within the limits of the Pachgaon Union.

Dacca.

2. The Lieutenant-Governor is further pleased to declare, in pursuance of sub-section (2) of the said section 14, that the said powers are conferred and may be exercised by the said officer for a period of three years only from the date of this notification.

No. 1567J.D.—The 27th May 1905.—Whereas it is declared by section 134 of the Indian Railways Act, 1890 (IX of 1890), that any person committing any offence against that Act or any rule thereunder shall be triable for such offence in any place which the Local Government may notify in that behalf, or in any other place referred to in that section:

In exercise of the power so conferred upon him, the Lieutenant-Governor is pleased to declare that any person committing any such offence within the limits of the Bengal and North-Western Railway between the places mentioned in column 1 of the following table shall be triable for such offence in any place within the jurisdiction of the Courts respectively mentioned in column 2 thereof:—

Column 1.	*Column 2.*
(1) Manhar Road and Pasraha Railway stations and places lying between them.	(1) All Courts having jurisdiction within the Begusarai subdivision of the Monghyr district, except Courts of Magistrates of the third class.
(2) Places lying between Pasraha and Kursela Railway stations, but exclusive of such stations themselves.	(2) All Courts having jurisdiction within the Sadar subdivision of the Bhagalpur district, except Courts of Magistrates of the third class.
(3) Kursela and Katihar Railway stations and places lying between them.	(3) All Courts having jurisdiction within the Sadar subdivision of the Purnea district, except Courts of Magistrates of the third class.

2. So much of Government notification dated the 24th April 1890, issued under section 14 of the Code of Criminal Procedure, 1882 (X of 1882), and published in Part I, page 343, of the *Calcutta Gazette* of the 30th idem, as relates to the district of Monghyr, is hereby cancelled.

No. 1584J.D.—The 29th May 1905.—Under section 3, Act I (B.C.) of 1876 (an Act to provide for the voluntary registration of Muhammadan marriages and divorces), the Lieutenant-Governor has been pleased to grant a license to Maulvi Ifazuddin Ahmed, authorizing him to register Muhammadan marriages and divorces, and to exercise the other functions of a Muhammadan Registrar within the police-stations of Kushtea, Nayapara and Daulatpur, in the district of Nadia.

Nadia.

No. 1585J.D.—The 29th May 1905.—Under section 2, Act XII of 1880 (an Act for the appointment of persons to the office of Kazi), the Lieutenant-Governor has been pleased to grant a sanad (license) to Maulvi Ifazuddin Ahmed, appointing him Kazi of thanas Kushtea, Nayapara and Daulatpur, in the district of Nadia, for the celebration of marriages and the performance of other rites and ceremonies, when application is made to him to perform any such functions.

Nadia.

H. W. C. CARNDUFF,
Offg. Secy. to the Govt. of Bengal.

No. 1599J.D.,—The 29th May 1905.—Under section 4 (1), clause (8) of the Code of Criminal Procedure, Act V of 1898, the Lieutenant-Governor declares the undermentioned Police outposts in the district of Hazaribagh to be police stations for the local areas specified :—

List of villages under the jurisdiction of Echak Independent Outpost.

Names.	Boundaries.	Names of villages included in jurisdiction.
Echak independent outpost (Hazaribagh police-station).	*East*, by villages—Godhia and Ghughulia .. In Bagadar police-station. *West*, by villages—Dudhpania and Soki ... In Etkhori out-post. and river Balbal In Chatra police-station. *North*, by village—Debo, a river and village Chotha ... In Burhi police-station.	
Hazaribagh ...	*South*, by—Sewan river and villages Pahra, Nagwa, and Churchu In Hazaribagh police-station.	
Gola Independent outpost (Ramgarh police-station.)	*East*, by villages—Gummanjara, Durgwadih, Madhupur, Sangramdih, Hesatu and Bandhdih, In the jurisdiction of Jhalda station, district Manbhum. *West*, by the Bheudra river in Ramgarh police-station. *North*, by—river Deonad and village Churgi... In Gumian police-station and village Burhangota in Kasmar police-station. *South*, by river Sobarn Rekha of Silli station district Ranchi.	(1) Arra, (2) Karamtand, (3) Kulla, (4) Kharre, (5) Ghutra, (6) Gurdih, (7) Pakowra, (8) Jogidih, (9) Jagra, (10) Therai, (11) Doi, (12) Danto, (13) Darighaghar, (14) Turi. (15) Durma, (16) Dighi, (17) Dhardhorwa, (18) Puranpania, (19) Pipratand, (20) Pochria, (21) Barkakalan, (22) Barkakhurd, (23) Ramhani, (24) Banka, (25) Matuaritola, (26) Mauai, (27) Ratanpure, (28) Sahjam, (29) Somratari, (30) Sael, (31) Hasel, (32) Echak, (33) Karmati, (34) Kamaru, (35) Girhi, (36) Gobarbanda, (37) Charrakh (38) Tepsa, (39) Dumraon, (40) Dumri, (41) Tilra, (42) Dag, (43) Dhawaia, (44) Nowadih, (45) Nichitpure, (46) Pokharia, (47) Bonga, (48) Bariath, (49) Bikrama, (50) Bhusai, (51) Bhuswa, (52) Rama Chooni, (53) Rud, (54) Saram, (55) Sirsi, (56) Sijuadih, (57) Sijuachati, (58) Alonjakhurd, (59) Asia, (60) Keuri, (61) Allonja kalan, (62) Kuteri, (63) Kanowdi, (64) Kalilasi, (65) Gunja (66) Gadisadam, (67) Gharghara, (68) Chanda, (69) Chorher, (70) Chorea, (71) Jamooari, (72) Jamoca, (73) Jharpo, (74) Tij, (75) Deoria, (76) Nawakhap, (77) Barwa, (78) Magura, (79) Mokarma, (80) Madanpure, (81) Maud Turi Kallan, (82) Maud Turi khurd, (83) Bharajo, (84) Siladih, (85) Sanpokh, (86) Hothli Jamooari, (87) Amnari, (88) Urukka, (89) Kurha, (90) Kariarpure, (91) Karma, (92) Khaira, (93) Chagra, (94) Jalondh, (95) Jerga, (96) Tatgawan, (97) Tetaria, (98) Deokli, (99) Narainpure (100) Nawadih, (101) Punai, (102) Punaitand, (103) Puto kalan, (104) Puto khurd, (105) Phirooka, (106) Bendoca, (107) Ballia, (108) Bormaka, (109) Basaria, (110) Baksidih, (111) Makarpakuarka, (112) Mahooaritola, (113) Rautdih, (114) Lodhi, (115) Lohra, (116) Lindroo, (117) Somradhap, (118) Sijooa, (119) Amli. (1) Awradih, (2) Ambadih, (3) Cheroodih, (4) Chakarbali, (5) Chakodheda, (6) Chokad, (7) Chonri, (8) Chopadolua, (9) Dudhmatia, (10) Barwadih, (11) Bichgarha, (12) Bechitand, (13) Bachakudar, (14) Basgarha, (15) Baghjogra, (16) Kulad Rai, (17) Kuru Saram, (18) Jaradih, (19) Jogedasbera, (20) Jangi, (21) Jaradih, (22) Jamoonigara, (23) Jawatand, (24) Jarabandh, (25) Jaratola, (26) Jaeratola Kallan, 27) Jobhia, (28) Janti Bera, (29) Dhordhorwa, (30) Dhamnatand, (31) Dhawaia, (32) Dhodhki, (33) Dhunandari, (34) Bhubhni, (35) Bhelwara, (36) Bhenantari, (37) Bhenan Sagatu, (38) Bhenan Jara, (39) Koca, (40) Kamta, (41) Kumhardanga, (42) Kunki, (43) Korampi, (44) Kamta, (45) Kosumdih, (46) Kenhua, (47 Kargajura, (48) Kalyanpure, (49) Karamara, (50) Kanardih, (51) Korambi, (52) Kusaigarha, (53) Kodwadih, (54) Karildih, (55) Kuju, (56) Nematola, (57) Nemadih, (58) Norsingdih, (59) Nawadih, (60) Nawadih, (61) Jaenhera. (62) Maganpure, (63) Musra Jara, (64) Muhlidih, (65) Mundodih, (66) Masuridih, (67) Machutand, (68) Manjhitola, (69) Khokha, (70) Khakhri. (71) Tadin, (72) Tonugaru (73) Pipradih, (74) Puswadih, (75) Purabdih, (76) Purabtand, (77) Pepra Jara, (78) Podhatand, (79) Pandaria, (80) Parratu, (81) Pepra Jara, (82) Parsadih, (83) Rona, (84) Raon Raon, (85) Rorai, (86) Raghooa, (87) Raghua Jara, (88) Raipora, (89) Ramharu, (90) Gondlikarai, (91) Gola, (92) Godanbera, (93) Gandhonia, (94) Gobindpure, (95) Gahurndih, (96) Dambharu, (97) Dundigachi, (98) Dumra, (99) Dumardiha, (100) Phuljharai, (101) Lechra, (102) Lewatand, (103) Lipia, (104) Ghaghra, (105) Ghaghra Jara, (106) Toer, (107) Topa Sara, (108) Tirla, (109) Badgaon, (110) Bandhdih, (111) Barbhuti, (112) Bedyatola, (113) Bejardih, (114) Butgorwa, (115) Banjara, (116) Beari, (117) Bareatoo, (118) Barga, (119) Baranga, (120) Bisa, (121) Bajlang, (122) Barka Jara, (123) Betum kallan, (124) Betum

Names.	Boundaries.	Names of villages included in jurisdiction.
		khurd, (125) Banda, (126) Barudih, (127) Barka Jara, (128) Bajam Sagatu, (129) Barwatola, (130) Batgorwa, (131) Barwatola, (132) Birhordih, (133) Sarugdih, (134) Sarla, (135) Sirka, (136) Sarai, (137) Sonardih, (138) Sutharpur, (139) Sararampure, (140) Sadam, (141) Seramgatu, (142) Sokla, (143) Sondimra, (144) Soso kallan, (145) Soso khurd, (146) Sutra, (147) Suga, tikra, (148) Samalpure, (149) Sisataur, (150) Sarlakhurd, (151) Hukoo, (152) Hormadga, (153) Hetukhakhra, (154) Hemazpure, (155) Heribandh, (156) Hethgarha, (157) Hetabarga, (158), Harua, (159) Haloo, (160) Hesang, (161) Hesahara.

List of villages and boundaries of Joynagore independent Outpost.

Joynagore independent outpost (Koderma police-station).	*East*, by river Koso and village Desaro in Koderma police-station *West*, by Jatha Sat river and villages Bolkhara, Harno, and Madangundi in Chowparan police station. *North*, by villages Birjamo and Bagro in Koderma police-station. *South*, by river Barakur and village Parhara, Baherabad, and Barisal in Burhi police-station.	(1) Kathadih, (2) Khaskari, (3) God Khor, (4) Sahwadih, (5) Katia, (6) Manidih, (7) Masowa, (8) Gharonji, (9) Ghormunda, (10) Jhalakdiha, (11) Kanti, (12) Dhamrai kallan, (13) Jit Kundi (unpopulated), (14) Gomo, (15) Dudhimatti, (16) Jainaggore, (17) Lohadanda, (18) Belpatri, (19) Dandadih, (20) Tilokri, (21) Baheradih, (22) Mandaria, (23) Garwatand (unpopulated), (24) Dharaidih, (25) Tamai, (26) Baradih, (27) Bahichar (unpopulated), (28) Nyetand, (29) Lendia, (30) Masondha, (31) Berwatand (unpopulated), (32) Pepcho, (33) Amjo, (34) Daldaha, (35) Matawan, (36) Tetron, (37) Ambadih, (38) Makatpur, (39) Nandodih, (40) Bhuardih, (41) Gohal, (42) Bhagmora, (43) Godea (unpopulated), (44) Manoowatand, (45) Moreano, (46) Jadootand, (47) Ropaidih, (48) Madhwatand, (49) Sunth, (50) Tarondh, (51) Gopaldih, (52) Baherdih, (53) Bhugandih (unpopulated), (54) Harodih, (55) Tetariadih, (56) Chehal, (57) Behari, (58) Bhekhnadih (unpopulated), (59) Pepero, (60) Jadudih, (61) Kharowdih, (62) Kurumdiha, (63) Alugdiha, (64) Mahoosagara, (65) Sandiha, (66) Juraia, (67) Karno Sarno, (68) Buddiha, (69) Kanchaklul (unpopulated), (70) Beko, (71) Pandeadih, (72) Alo, (73) Ghagdih, (74) Tithia, (75) Moda (unpopulated), (76) Ghaghradih, (77) Khuba, (78) Khandrapdiha, (79) Sonedih, (80) Lalabad (unpopulated), (81) Band Selli (unpopulated), (82) Semratari (unpopulated), (83) Bhual khunt (unpopulated), (84) Garaidih (unpopulated), (85) Arandiamo, (86) Bersodih, (87) Harli, (88) Kachiadih, (89) Kako, (90) Jogintelhi, (91) Pertabpore, (92) Banadih, (93) Gaenda, (94) Dighthu, (95) Pepradih, (96) Bandalchak, (97) Chanderpore, (98) Kudalo, (99) Nawada, (100) Lat Bendhwa, (101) Aramungo, (102) Dhushe (unpopulated), (103) Gamharbad, (104) Maheshmarai, (105) Paharpore, (106) Malmatand, (107) Pahrano, (108) Pankoo, (109), Nawadih khurd, (110) Chandra, (111) Banduha, (112) Burisah, (113) Tarma, (114) Konjhiadih, (115) Debitand, (116) Pathal Kudwa, (117) Palhadih (unpopulated), (118) Selia (unpopulated), (119) Jhalpo (unpopulated), (120) Thakuedih, (121) Manjhgawan (unpopulated), (122) Nawadih Kallan, (123) Singardih, (124), Kumhardiha, (125) Sonepara, (126) Besodih, (127) Chak, (128) Bajhidih (unpopulated), (129) Dhamrai Khurd (unpopulated), (130) Jolh Krana, (131) Bolkhara, (132) Simaria, (133) Purnea, (134) Manjhgawan, (135) Baspoor, (136) Gawalpore, (137) Bigha, (138) Chutiaro, (139) Chanderghatti, (140) Manjhgawan, (141) Khedopore, (142) Lachoodih (unpopulated), (143) Tetarchak (unpopulated), (144) Kariwan, (145) Kusahan, (146) Suga Sakh, (147) Dahnatola, (148) Kobridhab (unpopulated), (149) Dhankutti, (150) Dhan Jado, (151) Kurmadih, (152) Kherohar, (153) Cherkipahri, (154) Harahi, (155) Bokdandi, (156) Gadan Jarai, (157) Ghaghri, (158) Kosumbhadih, (159) Rajaidih (unpopulated), (160) Baradih, (161) Sunratand, (162) Mungnadih, (163) Gangamo (unpopulated), (164) Gadgi, (165) Parsabad, (166) Lapsiadih, (167) Bagodih, (168) Garohanch, (169) Bhunkodih, (170) Kharpoka, (171) Parogaon, (172) Jharpo, (173) Khakhar choli, (174) Dumri, (175) Raghumadih, (176) Hargabad, (177) Karamtand.

List of villages and boundaries of Barah Katta Independent Outpost.

Names.	Boundaries.	Name of villages included in jurisdiction.
Barkutta outpost (Burhi police-station).	*North*, by river Barakar and village Barisal in Burhi police-station. *South*, by villages Jaruadih, Channimako and Puto in Bagodar police-station. *East*, by river Barakar of Burhi police-station, villaes Leora Dalangi, of Birnig out-post, and Keswari, Durgi, Dhawara, Banger, Mudo, and Binr in Bagodar police-station. *West*, by river Baradhbahi and village Konahri in Burhi police-station.	(1) Kimma, (2) Kalli Chattan Tola Bera, (3) Rudpo, (4) Bangawan, (5) Nyatand, (6) Basaria, (7) Barwa, (8) Bellatand Tola Kapka, (9 Barriadih, (10) Buchai, (11) Bero, (12) Maskedih, (13) Man, pore, (14) Helna, (15) Katia, (16), Kendua, (17) Kurchuno, (18) Kendua Pandnatand, (19) Khaira, (20) Gaira, (21) Ghuskodih, (22) Chuglamo, (23) Chandgarh, (24) Chahariamo, (25) Jatghaghra, (26) Jamsoti, (27) Tarukbad, (28) Pandnatand, (29) Pumtand, (30) Paratkolla, (31) Parkangango, (32) Banpoora, (33) Basramo, (34) Bero, (35) Bangawan, (36) Manaia, (37) Rupnadih, (38) Alagdiha, (39) Kathghara, (40) Khari, (41) Khargu, (42) Gopidih, (43) Chalaksi, (44) Chatkari, (45) Chandangundo, (46) Chingiatand, (47) Jubi, (48) Dharai, (49) Tetaria, (50) Dumduma, (51) Digwar, (52) Dhobidih, (53) Naraina, (54) Jahua (55) Barano, (56) Baradih, (57) Badamki, (58) Bhukhnadih, (59) Bhikhnadih, (60) Mango, (61) Mahtodih, (62) Ragdih, (63) Rasani, (64) Musani, (65) Sewatand, (66) Silaidih, (67) Sudan (68) Sunacheha, (69) Dumardiha, (70) Karando, (71) Gorhar, (72) Goharadu, (73) Jawar, (74) Darhatta, (75) Tarukdiha, (76) Dharam Dari, (77) Nawadih, (78) Pokharia, (79) Paharpoor, (80) Paintari, (81) Chalnu, (82) Banda Singha, (83) Belkachi, (84) Banwari, (85) Belatand, (86) Bhuyandih, (87) Rongania, (88) Laganwa, (89) Lemoca, (90) Samratand, (91) Surujkund, (92) Silladih, (93) Kaleka, (94) Kendua Ghorbandh, (95) Gowhadi, (96) Garbandha khas, (97) Madhuban, (98) Madhopor, (99) Mahuatand, (100) Lokna, (101) Barion, (102) Maskedihe (103) Kenduia, (104) Dakghar, (105) Nyatola, (106) Parahta, (107) Barahkattachatti. (108) Barahkattadih, (109) Kalwar, (110) Rashbari, (111) Gangpacho, (112) Jhugi Barai, (113) Hesra, (114) Silaia.

List of villages and Boundaries of Tandwa Independent Outpost.

Tandwa independent outpost (Barkagaon police-station).	*North*, by village Murwa Katea in police-station Simeria. *South*, by village Burmu in outpost Burmu, district Ranchi. *East*, by river Gerua and village Barga in Barkagaon police-station. *West*, by village Arra in outpost Balumath, district Palamau.	(1) Kumdug kallan, (2) Buki, (3) Kumdag khurd, (4) Ursu, (5) Koed, (6) Burkutte, (7) kabra Khas, (8) Hetli Kabra, (9) Birna, (10) Tola Kebra, (11) Garelong, (12) Maselong, (13) Kamta, (14) Ghaghra, (15) Poklu, (16) Madhwapora, (17) Bansa, (18) Tandwa khas, (19) Garilong Chatti, (20) Dahoo, (21) Sitarampore, (22) Nawada, (23) Barwatola, (24) Kanrar Mari, (25) Dudua, (26) Asnatari, (27) Mangrahi, (28) Dhangaradih, (29) Raksi, (30) Chatti Dhangara, (31) Kharika, (32) Jamoomatand, (33) Padumpore, (34) Rarithwa, (35) Kasiadih, (36) Barwadih, (37) Mahuatand, (38) Tongri, (39) Bahora, (40) Karo, (41) Belari, (42) Kichto, (43) Mangardaha, (44) Rajotari, (45) Kulyanpore, (46) Rajdhar, (47) Dokwatand, (48) Sitarampore, (49) Bijain, (50) Sidaloo, (51) Betu, (52) Hargari, (53) Pahantongri, (54) Malmohoram, (55) Karamandar, (56) Thena, (57) Johea, (58) Karamtand, (59) Barwatola, (60) Kathaon, (61) Jamtola, (62) Kutki, (63) Kosumtola, (64) Henjda, (65) Manjhdih, (66) Jaratongri, (67) Maheratola, (68) Bargaon, (69) Pipratola, (70) Barwatola, (71) Bali, (72) Banpore, (73) Ramnitaur, (74) Mandnapatra, (75) Ketru Khap, (76) Banghetea, (77) Khandhar, (78) Koelra, (79) Baghlatwa, (80) Kosumtongri, (81) Clurlonga, (82) Harinkatwa, (83) Bukru, (84) Bithoon, (85) Lemoca, (86) Roll, (87) Raham, (88) Saradhi, (89) Ballia, (90) Champwadih, (91) Khoroha, (92) Soparam, (93) Humni, (94) Dadgarha, (95) Serandag, (96) Kishunpore, (97) Kosiadih, (98) Nawadih, (99) Hesatoo, (100) Khandhar, (101) Lunodih, (102) Sedhpa, (103) Belwari, (104) Berbir, (105) Salwe, (106) Bongagarha, (107) Lohra, (108) Bhutahi, (109) Mahuatand, (110) Barwatola, (111) Dari, (112) Tehadih, (113) Nawadah, (114) Misropi, (115) Tektha, (116) Sisai, (117) Soorhi, (118) Kadamderi, (119) Urda, (120) Pamaowra, (121) Satha, (122) Katahi, (123) Gapdha, (124) Pachra, (125) Khamdhar, (126) Giddi, (127) Simratand, (128) Raniohooan, (129) Utrathi,

List of villages and boundaries of Tandwa Independent Outpost—concld.

Names.	Boundaries.	Names of villages included in jurisdiction.
		(130) Karamtand, (131) Matia, (132) Mahoorwaghas, (133) Kendooatand, (134) Koorlanga, (135) Kundi, (136) Nawadi, (137) Dewagara, (138) Pokharia, (139) Tetartand, (140) Suiatand, (141) Burhipatra, (142) Dhamnatand, (143) Gonda, (144) Gorwar, (145) Nawadi, (146) Jahia, (147) Chatal, (148) Mandua, (149) Nawatand, (150) Arra Jowa, (151) Champa, (152) Badbigha, (153) Tarhed, (154) Sardha, (155) Pahra, (156) Demoon, (157) Lukia, (158) Phulwarea, (159) Kurhni, (160) Maranglowa, (161) Banjara, (162) Baeriatari, (163) Khelonga, (164) Lorangi, (165) Mandar, (166) Samidih, (167) Sidpa, (168) Sijoon, (169) Benglad, (170) Handhoo, (171) Parastand, (172) Hethlihandhoo, (173) Doomri, (174) Bejhoon, (175) Parra.

List of villages with boundaries of Etkhori Independent Outpost.

Etkhori independent outpost (Chowparan police-station).	*North*, by village Parsoni in police-station Chatra, and village Tatra, Pakharia and Parsawsan in Police-station Chowparan. *South*, by village Gara Urha in police-station Burhi and village Bhusahi in police-station Hazaribagh. *West*, by village Dhauthwa in police-station Hazaribagh and village Bhurkunda in police-station Chatra. *East*, by villages Kutli and Dhamna in police-station Chowparan.	(1) Nagar Etkhori, (2) Etkhori Chatti, (3) Katua, (4) Dhuna, (5) Erki, (6) Ballia, (7) Piprahi, (8) Silar, (9) Sonia, (10) Japer, (11) Koin, (12) Puchmo, (13) Punool, (14) Palangra, (15) Pakaria kalan, (16) Pakaria khurd, (17) Darbhanga, (18) Toorki, (19) Sonepora, (20) Hardia, (21) Pandekhap, (22) Banthu, (23) Kumhari, (24) Manjhgawan, (25) Kharooni, (26) Mahtha Parsaoni, (27) Nawada, (28) Ladooahi, (29) Kajia, (30) Raghu Narcha, (31) Narcha khurd, (32) Damhadih, (33) Madaen, (34) Narza, (35) Loran, (36) Malakpoor, (37) Pakaria, (38) Khowra Khalan (39) Khooa khurd, (40) Kimo, (41) Sirmatpoor, (42) Katahichak, (43) Kurjan, (44) Lita, (45) Gandhrapchak, (46) Dhapoora, (47) Jorideh, (48) Sonasunar, (49) Magla, (50) Rajwar, (51) Rajpur, (52) Dhankhera, (53) Nagwan, (54) Tonatand kalan, (55) Tonatand khurd, (56) Madhupur, (57) Kalyanpore, (58) Parsami, (59) Sared, (60) Romi, (61) Paroka, (62) Kuardeh, (63) Parokatand, (64) Barhichak, (65) Dhawaia, (66) Sahibari, (67) Bhadwa Barwa, (68) Bela, (69) Hathea, (70) Bana Jungle, (71) Mahua Pokar, (72) Patharia, (73) Bara, (74) Goshaindih, (75) Beshunpore, (76) Kanowdi, (77) Siria, (78) Mahuda, (79) Saharjam, (80) Belahri, (81) Holamta, (82) Lemodeh, 83) Keonla, (84) Rajhar, (85) Murumdag, (86) Salwe, (87) karni Kallan, (88) Karni khurd, (89) Chorkari, (90) Parain, 91) Pipra, (92) Jagdispur, (93) Babhandeh, (94) Bonga, (95) Baghmandi, (96) Sargawan, (97) Nawadih, (98) Asaria, (99) Kharowdhi, (100) Pajmo, (101) Parsadi Karma, (102) Kundri, (103) Marjhigawan, (104) Mahesa, (105) Dhonra, (106) Jhagaria, (107) Tilra, (108) Duhai, (109) Suhai, (110) Pachghara, (111) Madhania, (112) Sonepora Kalan, (113) Sonepora khurd, (114) Pipra, (115) Aamatri, (116) Mayapore, (117) Dheba Dowra, (118) Gormadih (119) Pakaria, (120) Pandni, (121) Chamaria, (122) Amjhar, (123) Bhuria, (124) Mahuganini (125) Mathuri Chak, (126) Ektara, (127) Salai kallan, (128) Salai khurd, (129) Kherria (Kharia), (130) Sapal, (131) Panjro, (132) Larahi, (133) Karkutta, (134) Chotha, (135) Tetar Chak, (136) Selai Karwa, (137) Bagheho, (138) Nazirganj, (139) Bargawn, (140) Bela (141) Sandha, (142) Karma kallan (143) Karma khurd, (144) Sikrool, (145) Paroria, (146) Harahi, (147) Ganeshpore, (148) Majoorhund, (149) Singhrawan, (150) Husia, (151) Choorahi, (152) Mahooari, (153) Babhandih, (154) Pipra, (155) Bilkharia, (156) Banhe, (157) Sindooari, (158) Garea, (159) Makhrool, (160) Dighi, (161) Parsabandh, (162) Dhangawan, (163) Manjholia khurd, (164) Manjholia kalan, (165) Kadgawan kallan, (166) Kadgaawn, Kallan, (167) Ghambaria, (168) Jamoonia, (169) Narcha kallan, (170) Narcha khurd, (171) Algdiha, (172) Sewai, (173) Pipra, (174) Deosar, (175) Kumhari, (176) Jakhand, (177) Bhagwanpore, (178) Koeri, (179) Malakdiha, (180) Bharwa, (181) Nawadih, (182) Saratpur, (183) Banadih, (184) Barakar, (185) Pakaria, (186) Zindapore, (187) Sewai khurd, (188) Dubi, (189) Ursi,

List of villages with boundaries of Etkhori Independent Outpost—concld.

Names.	Boundaries.	Names of villages included in jurisdiction.
		(190) Phulang, (191) Parosi, (192) Larahi, (193) Petaderi, (194) Soki, (195) Pertabpore, (196) Sadafar, (197) Cheri, (198) Nawadih, (199) Manjari, (200) Pathra, (201) Mahugain, (202) Jhordag, (202) Kewlia, (204) Kachanpore, (205) Nawada, (206) Dharampore, (207) Malhe, (208) Koeli, (209) Soki.

List of villages and boundaries of Danwa Independent Outpost.

Danwa independent outpost (Chowparan police-station).	*North*, by village Jhuram of outpost Fatehpur district Gaya. *South*, by river Mahane in police-station Chatra. *East*, by village Searkoni in police-station Chowparan. *West*, by village Bhalua in police-station Bara, district Gaya.	(1) Ahari, (2) Kathmahooli, (3) Purniahari, (4) Nawadi, (5) Garbhorwa, (6) Pathalgarwa, (7) Sanjha, (8) Jesikaram, (9) Mahanetaur, (10) Khutwakol, (11) Murtea, (12) Murtea khurd, (13) Kabilas, (14) Jamooniatand, (15) Dorea, (16) Duragara, (17) Marainia, (18) Sikda, (19) Karga, (20) Pakhangara, (21) Pendra, (22) Sahajna, (23) Belahi, (24) Adelwa, (25) Murea, (26) Danooa, (27) Tari, (28) Kendooali, (29) Jamoonahi, (30) Selowdar, (31) Baniwatand, (32) Chordaha.

List of villages and boundaries of Gidhour Independent Outpost.

Gidhour independent outpost (Chatra police-station).	*North*, by villages Pitiz, Bhurkunda and Amin in Etkhori outpost. *South*, by villages Nawadih, Singhani and Duari, and river Dudhmati in Simeria police-station. *East*, by river Balbal and villages Indra and Shahpore in Hazaribagh police-station *West*, by villages Gandharia, Ramtunda and Asarhia, and river Gangti in Chatra police-station.	(1) Angara, (2) Kuba, (3) Amin (4) Kurkutta, (5) Navakhap, (6) Peksa, (7) Dagdagwa, (8) Echak, (9) Parnadih, (10) Kanti, (11) Moti Bandh, (12) Umadhaki, (13) Bela, (14) Bedya, (15) Holumgara, *alias* Karang, (16) Kendua, (17) Pahra, (18) Guruadih, (19) Gidhour, (20) Salauga, (21) Guli, (22) Pitiji, (23) Hurnali, (24) Tilaia, (25) Bain, (26) Dalhorwa, (27) Tetaria, (28) Gopepur, (29) Kishunpur, (30) Lemoia, (31) Chanderporwa, (32) Nongawn, (33) Nawadih, (34) Bajobar, (35) Benga Soram, (36) Kashebar, (37) Marga, (38) Pitij, (39) Pedar Kown, (40) Gaurke, (41) Lohandi, (42) Jamooa, (43) Pathalgara, (44) Barwadih, (45) Doomi, (46) Banwar, (47) Belhar, (48) Chautha, (49) Doowari, (50) Jokahi, (51) Doomria, (52) Barisakhi, (53) Mayadih, (54) Barmedih, (55) Sekhani, (56) Alagdiha, (57) Indra, (58) Kerkira, (59) Chakarwar, (60) Mayapur, (61) Surhera, (62) Juggu, (63) Darua, (64) Bodhidih, (65) Roopin, (66) Barta, (67) Khelari, (68) Sendooari, (69) Sendooari khurd, (70) Manigawan, (71) Chatrahi, (72) Ghateri, (73) Sham Mahundar, (74) Tatunjara, (75) Madhwatand, (76) Gangpore, (77) Ramnabandh, (78) Thuthe Mahua, (79) Balewatand, (80) Bariatoo, (81) Sunratari, (82) Masooriatare Mangra, (83) Katkhara, (84) Murkundwa, (85) Loodhia, (86) Mahooatand, (87) Masooria, (88) Margi, (89) Sendoor Bair, (90) Rahmar, (91) Perthipoor, (92) Moorkunda) (93) Kugri Manjra, (94) Karmahi Manjra.

List of villages and boundaries of Pertabpur Independent Outpost.

Pertabpur independent outpost (Hunterganj police-station).	*North*, by villages Anantpur and Rohbi of Gaya police-station. *South*, by village Gandra in police-station Manatu, district Palamau.	(1) Anantpore, (2) Math Anantpore, (3) Chandri khurd, (4) Salempore, (5) Kunda, (6) Barwadehtola, (7) Tikooliatola, (8) Pachookhiatola, (9) Tursitola, (10) Khutertota, (11) Kutili, (12) Ekta, (13) Marigara, (14) Jabeya, (15) Kawra, (16) Dunidag, (17) Dhonri, (18) Kumra, (19) Genghra, (20) Purnadih, (21) Kalyanpore, (22) Bandohri, (23) Dawnapore, (24) Sikni, (25) Doomri,

List of villages and boundaries of Pertabpur Independent Outpost—concld.

Names.	Boundaries.	Names of villages included in jurisdiction.
	East, by villages Gomi and Kukurman in Hunterganj police station. *West*, by village Telwar of Imanganj outpost, district Gaya.	(26) Ghuji, (27) Jotidih, (28) Shankerpore, (29) Baghakola, (30) Khapia, (31) Bareatoo, (32) Madarpoor, (33) Bhowrodih, (34) Guria, (35) Mahoongain, (36) Apnoo, (37) Samalpore, (38) Telia, Bakoo, (39) Gur Turi, (40) Negam, (41) Chandaraporetola, (42) Badhar, (43) Doomar Bar, (44) Raghudeh, (45) Barwadih, (46) Gomi, (47) Katoo, (48) Nima, (49) Majrahi, (50) Baratpore, (51) Madhurwadhona, (52) Pirpir, (53) Bawa, (54) Barwadih, (55) Lahardara, (56) Gangodih, (57) Gajwa, (58) Chatartola, (59) Harbolwatola (60) Guriatehri, (61) Sidardih, (62) Tetarbar, (63) Koeriadih, (64) Bagha Kola, (65) Kepoola, (66) Hafizdih, (67) Babhoowa, (68) Pathra, (69) Chandithan, (70) Ghorighat, (71) Chandri kalan, (72) Mohanpore, 73) Koeriadih, (74) Charka kalan, (75) Charka khurd, (76) Gargoroa, (77) Parsahi, (78) Raharia, (79) Eghra, (80) Phalenda, (81) Nebhi, (82) Bhuyan Latro, (83) Indratanr, (84) Zerabad, (85) Adauria, (86) Erwahi, (87) Dundun, (88) Narainpore, (89) Adooria, (90) Sagrampore, (91) Hesatoo, (92) Bhandar, (93) Bantha, (94) Jatadagtola, (95) Ghudratola, (96) Tandwa, (97) Jamooniatand, (98) Adania, (99) Karmachak, (100) Mathurapore Kolhatola, (101) Tetaria, (102) Gangodih, *alias* Hetdohar, (103) Jagandih, (104) Keswa, (105) Mathurapore, (106) Dharampore, (107) Pachamo, (108) Mangra, *alias* Baijnathpore, (109) Nawkadihtola, (110) Naekbigha, (111) Joypore, (112) Pipkila, (113) Peganeatanr, (114) Gidha, (115) Gobia, (116) Nochia, (117) Karmahi, (118) Pertabpore, (119) Munshidih, (120) Rampore, (121) Gunadih, (122) Sheopore, (123) Karoodih, (124) Kasmar, (125) Bandohri, (126) Gangpore, (127) Bijni, (128) Potamdohar, (129) Baghota, (130) Babudih, (131) Luknia, (132) Pathputta, (133) Jhanti, (134) Marka, (135) Nunia, (136) Dam Korwa, (137) Kewlatola, (138) Batoora, (139) Kandhwatari, (140) Karanti, (141) Indrahi, (142) Barwadih, (143) Lipta, (144) Charahi, (145) Kathautia, (146) Fajoa, (147) Kendoeatanr, (148) Babhni, (149) Rahda, (150) Sonebarsa, (151) Banri, (152) Belaspore, (153) Bhowraj, (154) Charchari, (155) Kachanpore, (156) Bharhi, (157) Bajrahi, (158) Jaffardih, (159) Jolahbigha, (160) Kewlia, (161) Rampore, (162) Rahda, (163) Sarjamatu, (164) Lewar, (165) Jagarnathpore, (166) Chandodihtola, (167) Musargawatola, (168) Nakti Mandar, (169) Taradohar, (170) Mararia, (171) Khajuriatola, (172) Manjhitola, (173) Piriadaltola, (174) Saraidih, (175) Sidki, (176) Ghorbandha, (177) Kosiara, (178) Piptehat, (179) Pachamba, (180) Lota, (181) Setbuhni, (182) Kodwaria, (183) Parsahi, (184) Purnadih, (185) Bandatanr, (186) Hamdag, (187) Jarotola, (188) Jagatpore, (189) Nawginporetola, (190) Lipta, (191) Bishnupore, (192) Angara, (193) Chorhara, (194) Ghiahi, (195) Aurwachuan, (196) Machla, (197) Bhosamra, (198) Turiadih, (199) Nilsaria, (200) Suswahi, (201) Thobhwa, (202) Setbahni, (203) Pathal Tuta, (204) Kakahia, (205) Kosumbha, (206) Mohanpore, (207) Akhra, (208) Kasibar, (209) Bhusia, (210) Gendra, (211) Hithiatanr, (212) Durgi, (213) Manikchak, (214) Ethe, (215) Sisooahi, (216) Turiadih, (217) Garo, (218) Butkoea, (219) Tetartanr, (220) Chainpore, (221) Berman Kumbh, (222) Badhar, (223) Chapkatola, (224) Askultola, (225) Nowabartola, (226) Juri, (227) Kasha, (228) Longtari, (229) Rabda, (230) Nenai Kalan, (231) Nenai khurd, (232) Manjhgawan, (233) Dhobghata, (234) Badsahitola, (235) Nowabartola, (236) Palhi, (237) Khusihali, (238) Barahmana, (239) Fulwaria, (240) Sakhuahi, (241) Hendya khurd, (242) Kunj Lukamat, (243) Barwa Kocha, (244) Kewlia, (245) Pati, (246) Sasgara, (247) Kewla, (248) Bishunpore, (249) Bhagia, (250) Genri, (251) Tekadhartola, (252) Dhardharitola, (253) Kandhwatari, (254) Baghmara, (255) Bhughra, (256) Monia, (257) Mohakpore, (258) Mahooai, (259) Jagidih, (260) Lotwa, (261) Soharlat, (262) Jaghutari, (263) Dematanr, (264) Hardia, (265) Sikidag, (266) Lupugara, (267) Hendya Kalan, (268) Jamooa, (269) Sarhi, (270) Rewadih, (271) Koilidhonra, (272) Goure, (273) Kojram.

List of villages and boundaries of Jeridih Independent Outpost.

Names.	Boundaries.	Names of villages included in jurisdiction.
Jeridih independent outpost (Kasmar police-station).	*North*, by village Tarini in outposts Nawadih and Dhadhura in police-station Chas, district Manbhum. *South*, by village Kurkura in police-station Jaipur, district Manbhum, and village Kosum Tikri in police-station Chas, district Manbhum. *East*, by villages Sultanpur and Tetaria in outpost Chas, district Manbhum. *West*, by village Kalyanpore in police-station Kasmar.	(1) Arra, (2) Kenari, (3) Budrotandi, (4) Jhoibelwa, (5) Barnatand, (6) Piprabera, (7) Simatand, (8) Shekuridih, (9) Sibutand, (10) Mohanpore, (11) Jamooniatand, (12) Baghbatta, (13) Kenduatand, (14) Bhowrudih, (15) Pachnadih, (16) Bakhtiatand, (17) Katharia, (18) Nonan dih Manjra, (19) Kasetand, (20) Katka, (21) Gopinathpore, (22) Saharbera, (23) Kundowri, (24) Kenduadih, (25) Jaina, (26) Nowtandih, (27) Mohanpore, (28) Khergora, (29) Khusi, (30) Bansgara, (31) Bahadurdih, (32) Besarmunda, (33) Sundarpore, (34) Magladih, (35) Kusmunda, (36) Retkuru, (37) Dareghuka, (38) Gondodih, (39) Godobali, (40) Baridih, (41) Manghladih, (42) Sinadih, (43) Baheradih, (44) Charritand, (45) Harladih, (46) Gaechanda, (47) Madaitand, (48) Dharamtand, (49) Jolhadih, (50) Jabradih, (51) Amdih, (52) Champore, (53) Barudih, (54) Jaridih, (55) Aramtand, (56) Jam Joria, (57) Dhadhsidih, (58) Jhapro, (59) Mantand, (60) Gathwaritand, (61) Tatri, (62) Barah Motanr land Manjra, (63) Thakurtand, (64) Mahadeobar Manjra, (65) Dugrigora Manjra, (66) Posadih, Manjra, (67) Jotadih Manjra, (68) Bermatand Manjra, (69) Rorikusha Manjra, (70) Kudhardih Manjra, (71) Nirmaldih (72) Dhebagarha, (73) Bansgora, (74) Panhodih, (75) Dumri, (76) Sahandih, (77) Palbahiar, (78) Kasidih, (79) Karetand, (80) Indtand, (81) Jeruatand, (82) Simabar, (83) Bandhdih, (84) Jogiabandh, (85) Manjhidih, (86) Tetariadih, (87) Rajwardid, (88) Aramtand, (89) Kasidih, (90) Telaitand, (91) Bansimari, (92) Shampore, (93) Karmagora, (94) Dhodkidih, (95) Hesabatu, (96) Bishunpore, (97) Barwadih, (98) Kachanpore, (99) Pipradih, (100) Obdardih (unpopulated), (101) Dumratand, (102) Chatnitand, (103) Dudhpania, (104) Baheradih, (105) Coeradih, (106) Jarjahitand, (107) Birudih, (108) Balidih, (109) Barkitand, (110) Nya Mantand, (111) Narkara, (112) Dhodhkidih, (113) Marapharhi, (114) Radhanagar, (115) Dudhmati Manjra, (116) Dulalpore, (117) Serdarbera, (118) Gurguri, (119) Panwadih, (120) Sijnababu. (121) Sewtarsijoa, (122) Thakurdih, (123) Bhowrudih, (124) Baissijua, (125) Dhobitand, *alias* Somartand, (126) Modidih, (127) Sewtardih, *alias* Mangludih, (128) Mango, (129) Karmagora, (130) Hiudul, tand, (131) Paharpore, (132) Jolhadih, (133) Kowatdih.

List of villages and boundaries of Birni Independent Outpost.

Birni independent outpost (Dhanwar police-station.)	*North*, by villages Jhajha Baneatand and Karmatand in Dhanwar police station. *South*, by river Barakar and villages Urgo, Sabalpore, Numodih Koeridih and Purnadih in Bagodar police-station. *East*, by villages Hurkato, Mahespore, and Telma in Giridih Police Station. *West* by villages Chano, Paplo and Amadih in Koderma police-station.	(1) Arwatand, (2) Kenduah, (3) Gando, (4) Baliari, (5) Orgo, (6) Setaltola, (7) Arrari, (8) Rupidih, (9) Selaidih, (10) Kubri, (11) Tataria, (12) Pertapore, (13) Khakhajori, (14) Gaurdih, (15) Gobindadih, (16) Nawadih, (17) Bamri, (18) Siruatand, (19) Kalkeari, (20) Kairidih, (21) Khagradih, (22) Gowrdih, (23) Darhagir, (24) Bigaidih, (25) Kalyanpore, (26) Garaidih, (27) Taratand, (28) Bulatand, (29) Balua, (30) Karmatand, (31) Kharkhari, (32) Kharkhari Purni, (33) Khutatand, (34) Dowaya, (35) Bhaganal, (36) Margora, (37) Sanpirhi, (38) Kapilo, (39) Kothatari, (40) Panduatand, (41) Karre, (42) Ghasko, (43) Pandua khurd, (44) Bangra khurd, (45) Makmarko, (46) Mangladih, (47) Manihari, (48) Ratanpore, (49) Koduadih, (50) Bharkatta, (51) Manikdih, (52) Khasodih, (53) Gajodih, (54) Bako, (55) Moteotola, (56) Kosumbhai, (57) Kaskutha, (58) Kara Dhalia, (59) Gajradih, (60) Naitand, (61) Barend, (62) Baida pahri, (63) Bhatudih, (64) Manghlatola, (65) Marakhap, (66) Ramnagar, (67) Sabhamunda, (68) Sermadih, (69) Kurhwatand (70) Pariodih, (71) Khesro, (72) Chargharu, (73) Naglo, (74) Basguah, (75) Kumharpitmi, (76) Kanratanr, (77) Kairitola, (78) Pokhariatola, (79) Pokharia, (80) Ballia, (81) Karma, (82) Keshunitand, (83) Gurha, (84) Chargo, (85) Dudhiano, (86) Parasmani, (87) Karoopahar, (88) Charghara, (89) Nagri, (90) Pahridih, (91) Madangundi, (92) Kathitand, (93) Jamdala, (94) Dowarpahri, (95) Basodih (96) Baharwatand, (97) Kolharia, (98) Kharpi, (99) Jarpa, (100) Jhanj, (101) Talo, (102) Nawadah, (103) Banpora, (104) Khurkhundo,

List of villages and boundaries of Birni Independent Outpost.—concld.

Number.	Boundaries.	Names of villages included in jurisdiction.
		(105) Jharki, (106) Pipradih, (107) Baradih, (108) Birajpore, (109) Khurjio, (110) Garagooro, (111) Cheroodih, (112) Dattaga, (113) Pipradih, (114) Lodhiapahari, (115) Salaidih, (116) Serootand, (117) Kankipipar, (118) Pandariatand, (119) Pandarmania, (120) Khedbara, (121) Tapo, (122) Dharampore, (123) Balaabara, (124) Gadditand, (125) Dalangi, (126) Baherabad, (127) Loharah, (128) Surni, (129) Gidharand, (130) Ghurmara, (131) Chetankhari, (132) Dhab, (133) Nichetpore, (134) Hardia, (135) Gadi, (136) Jamdeha, (137) Pasam, (138) Panduatand, (139) Ghujji, (140) Choknebad, (141) Jatadih, (142 Pandaria, (143) Pathaldiha, (144) Chano, (145) Birinda, (146) Muraina, (147) Rupaidi, (148) Chetakharo, (149) Chonitand, (150) Balgo, (151) Baralitand, (152) Lookmali, (153) Changaikhar, (154) Panduadih, (155) Sayadih, (156) Jibkundi, (157) Chatwatand, (158) Dabri, (159) Palanjia, (160) Barahmasia, (161) Bishunpore, (162) Maduatanr, (163) Markhodih, (164) Lakargarha, (165) Sunradhabgadi, (166) Jaredih, (167) Durgadih, (168) Nawagar, (169) Bhatasingha, (170) Jamoomatand, (171) Nimabahiar, (172) Bhaluah, (173) Manjhiladilo, (174) Saranda, (175) Dugrua, (176) Tuladih, (177) Singhapore, (178) Tulsitaur, (179) Bishunpore, (180) Barahmasia, (181) Balidih, (182) Malhotola, (183) Mahadeodih, (184) Sakhabara, (185) Purna Nagar, (186) Birnikhas, (187) Barwachatar, (188) Barotaur, (189) Barotola, (190) Nawa Nagar, (191) Mahthadih, (192) Nawadih, (193) Bangra kallan, (194) Baratanr, (195) Rajmania, (196) Sarketola, (197) Kenduatand, (198) Tuliadih, (199) Dhobiasingha, (200) Naytand, (201) Baratand, (202) Bahania, (203) Lugardiha, (204) Chitarna, (205) Dango, (206) Fatehpore, (207) Balatand, (208) Balohia, (209) Hariharpore.

List of villages and boundaries of Bengabad Independent Outpost.

Bengabad independent outpost (Giridih police-station).	*North*, by river Patro in police-station Chakai, district Monghyr. *South*, by village Parsuramdih in police-station Giridih. *East*, by village Pathaljar in police-station Madhupur, district Dumka. *West*, by villages Gamharia and Gadi in Khoragdiha police-station.	(1) Ambatand, (2) Asgando, (3) Ambatand, (4) Keshun Chand, (5) Karmatand, (6) Kakarchi, (7) Kolharia, (8) Karmatand, (9) Karmatand khurd, (10) Kenduatand, (11) Kumhariahethli, (12) Kumharia Upraili, (13) Kurri, (14) Kharagdiha khurd, (15) Kheso Khar, (16) Khur Chutta, (17) Khadhara, (18) Khutribar, (19) Khariodih, (20) Ganeshdih, (21) Galud Jari, (22) Godhdih, (23) Gadi, (24) Gagti, (25) Gobridih, (26) Gaganpore, (27) Gansa Ser, (28) Gando, (29) Ghuthia, (30) Ghaghra, (31) Chandio, (32) Cherwandih, (33) Chinaras, (34) Chuglo, (35) Chiroodih, (36) Jambad, (37) Jambad Sani, (38) Surbania, (39) Jianpore, (40) Jhabdatand, (41) Tikloto, (42) Dogo, (43) Tilaia, (44) Tinghariwa, (45) Taria, (46) Tetariatand, (47) Dewatand, (48) Dalgando, (49) Damodardih, (50) Dumaria, (51) Dhuandih, (52) Dubri, (53) Nayadih, (54) Nawa ahar, (55) Nyadih, (56) Nyatand, (57) Nya Dabar, (58) Peshra, (59) Pepritand, (60) Pardih, (61) Pandadih, (62) Phursodih, (63) Phuchutola, (64) Bijhaya, (65) Barkitand, (66) Badgari, (67) Basmata, (68) Beshuni Soram, (69) Bengabad, (70) Basmanbari, (71) Baro Kurha, (72) Barawa, (73) Badwaria, (74) Bishunpur, (75) Barkitari, (76) Batan Bari, (77) Baburaidih, (78) Batkiaara, (79) Baradmara, (80) Banojari, (81) Barioipore, (82) Bargaraha, (83) Bejaipore, (84) Biju Bank, (85) Bhaga Bandi, (86) Mamardih, (87) Bhal Kudal, (88) Musserdih, (89) Maduatand, (90) Mandaradih, (91) Magrudih, (92) Bargarha, (93) Madhupore, (94) Murguchi, (95) Mangalatola Sani, (96) Mahtodih, (97) Mangalatola kallan, (98) Nitodih, (99) Mabuatand, (100) Makho, (101) Magragaro, (102) Raghaidih, (103) Rautdih, (104) Ragagario, (105) Raghunidih, (106) Ratanpore, (107) Ramatand, (108) Ratnadih, (109) Rangamati, (110) Rakhatand, (111) Lachmipore, (112) Lachmadih, (113) Lalpore, (114) Lafritand, (115) Lodhratari, (116) Lupi, (117) Lupipurni, (118) Sahajpora, (119) Sahai jari, (120) Sikdardih, (121) Sathibad, (122) Sedwa Singha, (123) Harkhudih, (124) Hadodih, (125) Hathgol, (126) Harila, (127) Haralwatand.

List of villages and Boundaries of Nawadih Independent Outpost.

Names.	Boundaries.	Names of villages included in jurisdiction.
Nawadih independent outpost (Doomri police station.)	*North*, by river, Jarea and Jamuna and villages Asurban and Lohedih in Doomri police-station. *South*, by river Damodar and villages Pichri, Tatri and Mango in Jeredih outpost. *East*, by rivers Jamoona and Damodar and villages Khanoodih and Pochra in Chas outpost, Manbhum district. *West*, by river Baro and villages Gulhobar and Kurki in Bagodar police-station.	(1) Kanjhkiro, (2) Gowaldih, (3) Sisodih, (4) Modetola, (5) Ballitand, (6) Lukibad, (7) Kuherehbera, (8) Gangadih. (9) Pelpilo, (10) Chunderwatand, (11) Kachanpore, (12) Sematand, (13) Pareatand, (14) Dhawatand, (15) Ledwatand, (16) Gahooradih, (17) Khalcho, (18) Tetariatand, (19) Dumariatand, (20) Bodro, (21) Telia, (22) Choohri, (23) Kooriadih, (24) Haraktola, (25) Kharpito, (26) Urpania, (27) Naekdih, (28) Argawan, (29) Khunta, (30) Kharwakhi, (31) Katiatand, (32) Bhawani, (33) Potso, (34) Gormara, (35) Nawadih, (36) Gobindpore, (37) Jolahadih, (38) Gowardih, (39) Rahareabera, (40) Gunjardih, (41) Mungo, (42) Mardeatand, (43) Barwadih, (44) Raliabera, (45) Goladih, (46) Konartand, (47) Barkibera, (48) Pakha Dabar, (49) Gomato, (50) Parsabera, (51) Churodih, (52) Murratand, (53) Joramana, (54) Piprahi, (55) Aadhua, (56) Ladia, (57) Matratola, (58) Harladih, (59) Missirdih. (60) Moditola, (61) Jaridih, (62) Darhi, (63) Sewtardih, (64) Baheradih, (65) Sigarhera, (66) Mungadih, (67) Nakla, (68) Kenduabera, (69) Tarmi, (70) Dubarbandha, (71) Besooghat, (72) Fulwari, (73) Hethbera, (74) Pokhardih, (75) Cheroodih, (76) Barwadih, (77) Alargo, (78) Banhetand, (79) Sunatand, (80) Kaseadih, (81) Mainatand, (82) Telo, (83) Mirchaidih, (84) Kenduadih, (85) Charro, (86) Taranari, (87) Lachmipare, (88) Madhuban, (89 Narga, (90) Jamooniatand, (91) Rehwa, Kanari, (92) Sareatand, (93) Dugda, (94) Sonardih, (95) Chandooadih, (96) Parsatand. (97) Phuljharria, (98) Baniabad, (99) Jhagrahibad, (100) Jinpobera, (101) Koohagora, (102) Chamli, (103) Kamiatola, (104) Narra, (105) Buchadih, (106) Barwadih, (107) Chamaridih, (108) Harladih, (109) Belatand, (110) Jaduatand, (111) Nawadih, (112) Barwadih, (113) Kapsodih, (114) Narahenpore, (115) Dahiari, (116) Sisooa, (117) Utbara, (118) Bansi, (119) Palamow, (120) Bhandarkudar, (121) Rohamabera, (122) Sawtartola, (123) Korecchota, (124) Parasbani, (125) Korubara, (126) Koiadih, (127), Charrabadh, (128) Paplo. (129) Belantand, (130) Jinori, (131) Baridih, (132) Paink) (133) Karru Khuta, (134) Barwa Bali, (135) Dhawaia, (136) Rani Kurha, (137) Birni, (138) Manjhlitand, (139) Barahmasia, (140) Pipradih, (141) Salwartand, (142) Barwardih, (143) Manpore, (144) Asnagarha, (145) Bandio, (146) Raharbera, (147) Lasia. (148) Hathiapathal, (149) Fatahpore, (150) Kurkutta, (151) Bermo, (152) Budikaro, (153) Man Jhidih, (154) Agardih, (155) Urpania, (156) Bursar, (157) Gopaldih, (158) Sawtardih, (159) Barwadih, (160) Berdra, (161) Thakurdih, (162) Baradih, (163) Baheradih, (164) Rajatand, (165) Bahera Kudar, (166) Barahmasia, (167) Ratari, (168) Bandhdih, (169) Sigooa, (170) Pipradih, (171) Hurdhowa, (172) Urma Kari, (173) Dugda, (174) Agardih, (175) Charua, (176) Khutgo, (177) Chiton Kurda, (178) Belatand, (179) Madanpore, (180) Rangamati, (181) Parsadih, (182) Bhuadih, (183) Jharnadih, (184) Shamtand, (185) Shaharia, (186) Ghujodih, (187) Dhumariatand, (188) Surhi, (189) Lareatand, (190) Ahardih, (191) Bhaiadih, (192) Titariatand, (193) Pandnatand, (194) Kokiladih, (195) Taratand, (196) Amjhar, (197) Phulgharia, (198) Harsidih, (199) Bholmara, (200) Kodwadih, (201) Amlo, (202) Tarabera, (203) Armo, (204) Garki, (205) Mahuatand, (206) Kargali, (207) Karo, (208) Bandook Bera, (209) Ammataur, (210) Katcho, (211) Butharia, (212) Kothi, (213) Nawadih, (214) Jhalpadih, (215) Kuthgara, (216) Kemo Jorea, (217) Koesi, (218) Kusaritola, (219) Burgara, (220) Ghatiari, (221) Janghlipore, (222) Koeribera, (223) Rajabera, (224) Karamara, (225) Gursabandh, (226) Manmahoodar, (227) Chapri, (228) Pandaria, (229) Belatand, (230) Dhogapani, (231) Lakargarwa, (232) Junodih, (233) Gabargura, (234) Kesdari, (235) Degagarha, (236) Tario, (237) Hethturio, (238) Pokharia, (239) Purni Pokharia, (240) Belaigara, (241) Busro, (242) Kodmadih, (243) Ghuttatand, (244) Barhi, (245) Purnibari, (246) Gardih, (247) Baridih, (248) Saroobera, (249) Jhelangtand, (250) Galajhdih, (251) Mungo, (252) Mothra, (253) Lomboodih, (254) Manjhtand.

List of villages and boundaries of Pirtand Independent Outpost.

Names.	Boundaries.	Names of village included in jurisdiction.
Pirtand independent outpost (Doomri police-station).	*North*, by river Barakar and village Palma in Giridih police-station. *South*, by villages Amadih, Pelmi, Nero, Domanpore in Topchanchi, police-station Manbhum. *East*, by villages Jitpore, Dundataur, Upraili and Palma in outpost Tundi, district Manbhum. *West*, by villages Jeridih and Atka in Doomri police-station.	(1) Charkichatti, (2) Charkidih, (3) Salaitola, (4) Khelwatand, (5) Sugatand, (6) Chalkari, (7) Belatand, *alias* Sinjotand, (8) Mahuatand, (9) Manduldih, (10) Lerwa, (11) Kasiadih, (12) Gamharia, (13) Teliabahiur, (14) Mahuatanr, (15) Kaunjhia, (16) Harludih, (17) Nawasar, (18) Mangartelia, (19) Buchidari, (20) Chengdhari, (21) Badahi, (22) Banaso, (23) Latatand, (24) Rudaipore, (25) Jharha, (26) Pargodih, (27) Belwadih, (28) Banhethan, (29) Dhab, (30) Dewandih, (31) Akonwa, (32) Kaparia Bera, (33) Dubedih, (34) Laharbera, (35) Rawatdih, (36) Kenduadih, (37) Besaibhetha, (38) Barahmasia, (39) Purna Nagar, (40) Rajabetha, (41) Phulwaria, (42) Manjhdih, (43) Burea Baghi, (44) Pirtand, (45) Manjhladih, (46) Pathal ghatra, (47) Taratand, (48) Dudmath, (49) Pandedih, (50) Pathal garwa, (51) Radha Nagar, (52) Mahadevdih, (53) Kapardardih, (54) Khedatand, (55) Koratand, (56) Naokitand, (57) Palganj, (58) Dudhmania, (59) Karanpore, (60) Kumhar Lalo, (61) Kuthwara. (62) Chapargara, (63) Nawadih, (64) Gharbad, (65) Suriabandh, (66) Ghorchanchi, (67) Jamoca, (68) Searangi, (69) Taratand, (70) Barearpore, (71) Madanpore, (72) Parasbani, (73) Fatehpore, (74) Partabpore, (75) Pathal Jari, (76) Dumuria Khalar, (77) Masnotand, (78) Saraitand, (79) Dhawatand, (80) Sagatand, (81) Sumar Bera, (82) Gajratand, (83) Barandihi, (84) Bhaluapahri, (85) Kolharia, (86) Lachanpore, (87) Ronguanatand, (88) Gondlitand, (89) Rajodih, (90) Ghatadih, (91) Bishunpore, (92) Pematoatola, (93) Mahudih, (94) Khetadahar, (95) Hargarha, (96) Chandandih, (97) Sikdardih, (98) Badahi, (99) Chaibhar, (100) Lahbari, (101) Agaia, (102) Laongi, (103) Sunar Jari, (104) Maheshlipti, (105) Daradmara, (106) Jamoomatola, (107) Barapahri, (108) Barwadih, (109) Budhnia, (110) Sunar Kothi, (111) Jamdaha, (112) Karmatand, (113) Sahurpora, (114) Parreatand, (115) Sagarbhanga, (116) Madhopore, (117) Balmo, (118) Bergaon, (119) Jahardaha, (120) Paharpore, (121) Mandarro, (122) Moonatand (123) Lachunpore, (124) Khawastand, (125) Manghladih, (126) Arheka, (127) Madnadih, (128) Bamhania, (129) Jarkahi, (130) Pepradih, (131) Mohoolidih, (132) Kolharia, (133) Harladih, (134) Bhawanand, (135) Belkatri, (136) Manjhladih, (137) Belgari, (138) Barhagari, (139) Jamoomatand, (140) Seorajpore, (141) Ambadih, (142) Kasiadih, (143) Kenduadih, (144) Bedro, (145) Bansimri, (146) Karoo Jara, (147) Dumariatand, (148) Jitpore, (149) Kurko, (150) Nematand, (151) Goshaindih, (152) Barwadih, (153) Karetand, (154) Barkitand, (155) Katahratand, (156) Domandeh Horladeh, (157) Kenduadih, (158) Kolkhi, (159) Dumariabad, (160) Sohranpore, (161) Cherudih, (162) Sunderpore, (163) Bahadurpore, (164) Manghlideh, (165) Ajibad, (166) Guhohotha, (167) Jaduadih, (168) Lathwatand, (169) Gambhra, (170) Badgawan, (171) Jilingtand, (172) Lipitand, (173) Sohraia, (174) Belatand, (175) Ghatadih, *alias* Madh Kalu, (176) Tooio, (177) Bansotand, (178) Manjhiandih, (179) Rajpara, (180) Bangawan, (181) Gardih, (182) Marmi, (183) Dadhkitand, (184) Maheshduha, (185) Naokani, (186) Khairatand, (187) Chapri, (188) Burriatand, (189) Kolhutand, (190) Chatra, (191) Kurrokoncha, (192) Bakuradih, (193) Baritand, (194) Dudhimati, (195) Baliapore, (196) Bhagalpore, (197) Taratand, (198) Lachanpore, (199) Bekatpore, (200) Asoraidih, (201) Jamoonia Chuan, (202) Kenduadih, (203) Kamla Singha, (204) Dhawatand, (205) Bhawanpore, (206) Maheshpore (207) Chethrodeh, (208) Kolharia, (209) Barahsinga kallan. (210) Barasingha khurd, (211) Barearpore, (212) Dubea Berah, (213) Khekhra, (214) Khedatand, (215) Dhaniadih, (216) Messerdeh, (217) Bastapore, (218) Kangodih, (219) Pepradih, (220) Pokharia, (221) Jhalwadih, (222) Chungeatand, (223) Luseadih, (224) Gorandih, (225) Manjhratand, (226) Pareharo, (227) Khamhurbar, (228) Sabnabar, (229) Paroreatand, (230) Gohardaha, (231) Bahilwabad, (232) Jamooatand, (233) Kolhera, (234) Hirapore, (235) Barwadih, (236) Kharpoka, (237)

Names.	Boundaries.	Names of villages included in jurisdiction.
		Lalitpore, (238) Dodosimur, (239) Moojpore, (240) Dumariatand, (241) Chilenga, (242) Pandnatand, (243) Karmatand, (244) Karando, (245) Bahiratola, (246) Moohiadih, (247) Majura, (248) Kasakond, (249) Jamoon, (250) Goladahar, (251) Rajo, (252) Parsabera, (253) Nawasar, (254) Madhupore, (255) Ghatiari, (256) Bandh, (257) Parwatand, (258) Manjhlatand, (259) Nawadih) (260) Pokharia, (261) Phulatand, (262) Purbatpore, (263) Baradih, (264) Pandedih, (265) Bhulatand, (266) Kasiadih, (267) Nawadih, (268) Belatand, (269) Kurwa, (270) Pepradih, (271) Bon Singha, (272) Beri, (273) Maojpore, (274) Barganhar, (275) Jarahar, (276) Madhuban, (277) Turitola, (278) Dhasotand, (279) Kasiadih, (280) Korhea, (281) Jainaggore, (282) Berangara, (283) Bagdaha,, (284) Singhpore, (285) Saharwara, (286) Khapai Bera, (287) Bhojedah, (288) Baheradeh, (289) Datkheru kallan, (290) Datkhuru khurd, (291) Chahbari, (292) Goshani Dera, (293) Dumareabera, (294) Cheru Bera, (295) Paras Nath Dák Bungalow, (296) Temple Parasnath.

H. W. C. CARNDUFF,
Offg. Secy. to the Govt. of Bengal.

POLICE DEPARTMENT.

No. 1587J.D.—The 29th May 1905.—Babu Keshub Lal Guha, Inspector of Police, Khulna, who was, under the order of the 9th May 1903, promoted substantively *pro tempore* to the second grade of Inspectors, is confirmed in that grade, with effect from the 7th April 1903.

Khulna.

H. W. C. CARNDUFF,
Offg. Secy. to the Govt. of Bengal.

PUBLIC WORKS DEPARTMENT.

ESTABLISHMENT.

The 30th May 1905.

No. 122.—The following extract from a notification, issued by the Government of India in the Department of Revenue and Agriculture (Civil Works), is republished for information:—

No. 129, dated the 22nd May 1905.—The Governor-General in Council is pleased to order the following promotions and reversions to and in the classes of Chief and Superintending Engineers, attached to the Irrigation, Roads and Buildings Branch with effect from the dates specified:—

NAME.	From—	To—	With effect from—
			1905.
Higgins, A. F. ...	Chief Engineer, 3rd class, *temporary.*	Superintending Engineer, 1st class.	1st Feb.
White, C. A. ...	Superintending Engineer, 3rd class, *temporary.*	Officiating Superintending Engineer.	1st ,,
Finnimore, B. K. ...	Ditto ...	Ditto ...	6th ,,
Scobie, M. J. ...	Superintending Engineer, 2nd class, and Superintending Engineer, 1st class, *temporary.*	Superintending Engineer, 1st class, *permanent.*	15th ,,
Thomson, A. S. ...	Superintending Engineer, 3rd class, and Superintending, Engineer, 2nd class, *temporary.*	Superintending Engineer, 2nd class, *permanent.*	15th Feb.

NAME.	From—	To—	With effect from—
			1905.
Lees, O. C. ...	Superintending Engineer, 3rd class.	Superintending Engineer, 2nd class, *permanent*.	15th Sept.
White, C. A. ...	Executive Engineer, 1st grade, and Officiating Superintending Engineer.	Superintending Engineer, 3rd class, *temporary*.	3rd April.
Butler, T. ...	Superintending Engineer, 3rd class.	Superintending Engineer, 2nd class, *temporary*.	4th April.
Finnimore, B. K. ..	Executive Engineer, 1st grade, and Officiating Superintending Engineer.	Superintending Engineer, 3rd class, *temporary*.	4th "
Scobie, M. J. ...	Superintending Engineer, 1st class.	Chief Engineer, 3rd class, *temporary*.	11th April.
Gwyther, W. B. ...	Superintending Engineer, 3rd class.	Superintending Engineer, 2nd class, *temporary*.	11th April.

ESTABLISHMENT.

The 24th May 1905.

No. 120.—Mr. G. Ewing, Honorary Assistant Examiner, Central Office of Accounts, is granted privilege leave for two months, under Article 260 of the Civil Service Regulations with effect from the 1st May 1905.

M. J. SCOBIE,
Offg. Secy. to the Govt. of Bengal.

CORRIGENDUM.

The 25th May 1905.

No. 121.—In Bengal Government Notification No. 108, dated 2nd May 1905, *for* "1st May 1905" *read* "afternoon of the 3rd May 1905."

M. J. SCOBIE,
Offg. Secy. to the Govt. of Bengal.

IRRIGATION DEPARTMENT.

The 30th May 1905.

No. 14.—Notification.—With reference to this Department Notification No. 37, dated the 23rd June 1903, fixing the rates and place for tolls to be levied on the Madaripur bhil Channel between the rivers Kumar and Madhumati, it is hereby notified for general information that the Lieutenant-Governor is pleased, under the provisions of section 6 of Act V (B.C.) of 1864, to declare that *Jolirpar* as a toll-station will be abolished, and that tolls will be levied at *Tentulia* in the 3rd mile from the Madhumati river and in the 19th mile from the Kumar river, with effect from 1st June 1905.

W. A. INGLIS,
Secy. to the Govt. of Bengal.

RAILWAY DEPARTMENT

The 30th May 1905.

No. 22R.—Notification.—The following notification, issued by the Railway Board, is republished for information:—

W. A. INGLIS,
Secy. to the Govt. of India.

No. 73, dated the 18th May 1905.—The following is published for general information:—

No. R. T. 118, dated Simla, the 11th May 1905.

RESOLUTION—By the Railway Board.

Rule 72A and amended rules 101 and 269 of Part I of the General Rules of 1895 for working open lines of Railway in British India.

READ—

Section 47 of the Indian Railways Act, 1890 (IX of 1890).

Government of India, Public Works Department, Notification No. 118, dated the 21st March 1895, and the Government of India, Circular No. 6 Ry., dated the 12th March 1895.

Government of India, Public Works Department, Notification No. 257, dated the 28th May 1896, and the Government of India Circular No. 3 Ry., dated the 22nd May 1896.

Government of India, Public Works Department, Notification No. 345, dated the 14th August 1896, and the Government of India Resolution No. 640R. T., dated the 12th August 1896.

Government of India, Public Works Department, Notification No. 394, dated the 22nd December 1904, and the Government of India Circular No. 6 Ry, dated the 14th December 1904.

Government of India, Department of Commerce and Industry, Notification No. 301, dated the 24th March 1905.

Letters from the Government of Bengal, Nos. 7 T.R. and 26 T.R., dated respectively the 18th and 25th April 1905.

RESOLUTION.—The Manager and Engineer of the Bengal Provincial Railway has recommended the adoption on the Bengal Provincial Railway of rule 72 A and the amended rules 101 and 269 of Part I of the General Rules for working open lines of railway in British India, which have been promulgated under Public Works Department Circular No. 6 Ry., dated the 14th December 1904, and published under the Government of India, Public Works Department, Notification No. 394 dated the 22nd December 1904 (*vide* Part I of the *Gazette of India* of the 24th December 1904).

2. In exercise of the powers conferred by the notification of the Government of India in the Department of Commerce and Industry, No. 301, dated the 24th March 1905, read in the preamble above, the Railway Board are accordingly pleased, under section 47, sub-section (3) of the Indian Railways Act, 1890, to sanction the application of Rule 72A and the amended rules 101 and 269 of Part I of the General Rules for working open lines of railway cited in paragraph 1 above to the Bengal Provincial Railway.

ORDER—Ordered that this Resolution be published under a notification in Part I of the *Gazette of India* as required by section 47, sub-section (3) of the Indian Railways Act, 1890 (IX of 1890); also that the new rule and the amended rules cited in paragraph 1—which have already been published in the *Gazette of India*—be kept at railway stations as directed by sub-section (6) of the same section; and that this Resolution be communicated to the Government of Bengal for information and guidance.

MARINE DEPARTMENT.

The 26th May 1905.

No. 60Marine.—Mr. C. A. D. Greenland, Second Mate Leadsman, Chief Officer of the P.V. *Alice*, is granted, under Article 245 of the Civil Service Regulations, shore leave for one month, with effect from the forenoon of 23rd May 1905.

W. A. INGLIS,
Secretary to the Govt. of Bengal.

The 29th May 1905.

No. 61 Marine.—The following abstract account of the receipts and expenditure of the Chittagong Port Fund for the year 1904-1905, which has been submitted by the Commissioners of the Port of Chittagong for publication under section 36, sub-section (2) of Act X of 1889, is published for general information:—

Receipts.	Amount.	Total.	Expenditure.	Amount.	Total.
	Rs. A. P.	Rs. A. P.		Rs. A. P.	Rs. A. P.
Opening balance on the 1st April 1904.	.....	57,354 9 1	Refund—		
			Repayment of loan for mooring materials.	2,519 10 8	
Port dues	40,232 13 0		Port dues	37 8 4	
		40,232 13 0	River dues	3,414 6 9	
					5,971 4 7
River dues	31,176 8 3	31,176 8 3	Administration—		
Fees and fines—			Pay of Vice-Chairman ...	.....	
Mooring fees	15,694 0 0		Fees to Port Commissioners	535 8 0	
Fees for supplying water ...	7,360 0 0		Establishment	.....	
License fees for passengers' boat	1,152 8 0		Contingencies	.....	
,, for cargo boat ...	485 8 0		Cost of audit	.....	
Fees for drawing, painting metal badges.	293 4 0		Law charges	.....	
					535 8 0
Fines and forfeitures	419 0 0	25,397 15 0	Police—		
			Pay of European Constable	1,200 0 0	
					1,200 0 0
Miscellaneous receipts—			Port Office—		
Sale-proceeds of stores	2,443 15 11		Salary of Port Officer ...	6,000 0 0	
Earnings of the steam-launch *Active*.	2,550 0 0		Travelling allowance ...	73 0 0	
Earnings of the steam-tug *Gekko*.	720 0 0		Establishment	3,898 14 0	
Miscellaneous	6,060 12 9		Contingencies and miscellaneous.	942 3 10	
Cash recoveries	55 7 5		Petty construction and repairs.	2,766 10 11	
Hire of Port Commissioners' Salt Jetties.	711 4 3		Cost of stores	.....	
		12,570 8 4			12,617 13 9
Contribution from Pilotage Fund.	2,500 0 0	2,500 0 0	Vessels and boats—		
			Establishment	13,765 10 1	
Recoveries for services rendered to other Departments.	2,283 9 0		Stores	15,056 7 3	
			Repairs	167 8 3	
		2,283 9 0	Contingencies	1,641 13 5	
					29,631 2 0
Grant from Government ...	3,150 0 0	3,150 0 0	Light-house—		
			Establishment	3,044 8 9	
Transport charges	2,640 0 0		Stores	1,567 4 11	
		2,640 0 0	Contingencies	45 15 6	
			Repairs	142 9 9	
			Protective works at Kutubdia	100 0 0	
					4,934 6 2
			Miscellaneous—		
			Miscellaneous establishment	2,330 3 9	
			Pensions and gratuities ...	350 15 5	
			Ground-rent	140 2 0	
			Cost of and repairs to buoys and chains.	8,383 6 6	
			Telegrams	412 13 0	
			Port Commissioners' Jetties	134 2 7	
			Services rendered to other Departments.	951 2 5	
			Annual grant to Seamen's Resort.	500 0 0	
			Miscellaneous and unforeseen charges.	5,187 7 11	
					18,999 12 7
			Harbour Master's pay ...	2,731 2 10	
			,, fees ...	1,404 0 0	
					4,135 2 10
			Total ...	... .	73,975 0 11
Total ...	...	1,23,951 5 7	Balance on the 31st March 1905	... ..	1,07,330 13 9
Grand Total ...	.....	1,81,305 14 8	Grand Total ...	.....	1,81,305 14 8

W. A. Inglis,
Secy. to the Govt. of Bengal.

SUBORDINATE CIVIL SERVICE.

No. 2877A.

No. 1059 A.D.—The 25th May 1905.—Babu Madhab Chandra Misra, substantive *pro tempore* Sub-Deputy Collector, Angul, is allowed leave for two weeks, under article 242 (*a*) of the Civil Service Regulations, with effect from the 15th June 1905.

Angul.

No. 1065 A.D.—The 25th May 1905.—Babu Nrisinha Ranjan Mukerji, substantive *pro tempore* Sub-Deputy Collector, Presidency Division, is posted to the head-quarters station of the 24-Parganas district.

24-Parganas.

No. 1082 A.D.—The 26th May 1905.—Babu Abani Kumar Sen, substantive *pro tempore* Sub-Deputy Collector, Dacca, is transferred to the Narayanganj subdivision of that district.

Dacca.

No. 1084A.D.—The 26th May 1905.—Babu Aswini Kumar Datta, substantive *pro tempore* Sub-Deputy Collector, Narayanganj, Dacca, is transferred to the Munshiganj subdivision of that district.

Dacca.

No. 1091A.D.—The 26th May 1905.—Under the authority vested in him by section 357, sub-section (2), of the Code of Criminal Procedure, Act V of 1898, the Lieutenant-Governor empowers Maulvi Nasiruddin Ahmad, substantive *pro tempore* Sub-Deputy Magistrate, Sasaram, Shahabad, to take down evidence in criminal cases in the English language.

Shahabad.

No. 1149A.D.—The 27th May 1905.—Babu Surjya Kumar Guha, substantive *pro tempore* Sub-Deputy Collector, Sirajganj, Pabna, is transferred to Jalpaiguri and is appointed to have charge of the Alipur tahsil, *vice* Babu Jnanendra Mohan Ghosh.

Pabna.
Jalpaiguri.

No. 1151A.D.—The 27th May 1905.—Maulvi Sadad Abul Musood, substantive *pro tempore* Sub-Deputy Collector, Nator, Rajshahi, is transferred to Pabna and is posted to Sirajganj, *vice* Babu Surjya Kumar Guha.

Rajshahi.
Pabna.

No. 1153A.D.—The 27th May 1905.—Babu Jnanendra Mohan Ghosh, Sub-Deputy Collector, in temporary charge of the Alipur tahsil, is transferred to the Sadar station of the Jalpaiguri district.

Jalpaiguri.

No. 1160A.D.—The 27th May 1905.—Babu Surendra Nath Sarkar, Sub-Deputy Collector, now employed as Superintendent of Distillery, Patna, is allowed leave for one month, under article 260 of the Civil Service Regulations, with effect from the date on which he may avail himself of it.

Patna.

No. 1166A.D.—The 29th May 1905.—Babu Satis Chandra Gupta, substantive *pro tempore* Sub-Deputy Collector, 24-Parganas, is transferred to the Basirhat subdivision of that district.

24-Parganas.

No. 1185A.D.—The 29th May 1905.—Dewan Krishta Chandra, Sub-Deputy Collector, Chittagong Hill Tracts, is allowed leave for three months, under article 260 of the Civil Service Regulations, with effect from the 1st June 1905, or any subsequent date on which he may avail himself of it.

Chittagong Hill Tracts.

No. 1193A.D.—The 30th May 1905.—Mr. W. J. H. Ballantine is appointed substantively *pro tempore* to the fourth grade of Sub-Deputy Collectors, and is posted to the Burdwan Division. He is vested with the powers of a Magistrate of the third class.

Burdwan Divn.

R. W. CARLYLE,
Offg. Chief Secy. to the Govt. of Bengal.

REGISTRATION DEPARTMENT.

NOTIFICATION.

No. 344P.D.—The 29th May 1905.—The Lieutenant-Governor sanctions, under section 5 of Act III of 1877, the transfer of thana Puthia from the jurisdiction of the Registration sub-district of Bilmaria to that of the Sadar sub-district of Rampur Boalia, of thana Burigaon from the jurisdiction of the Registration sub-district of Nator to that of the Registration sub-district of Bilmaria, and of thana Panchupur from the jurisdiction of the Registration sub-district of Naugaon to that of the Registration sub-district of Nator, in the district of Rajshahi. The jurisdiction of the Registration sub-district of Rampur Boalia will henceforth be restricted to thanas Boalia, Godagari, Tanor, Bagmara and Puthia; the jurisdiction of the Registration sub-district of Nator to thanas Nator, Singra and Panchupur; the jurisdiction of the Registration sub-district of Bilmaria to thanas Bilmaria or Lalpur, Charghat and Burigaon; and the jurisdiction of the Registration sub-district of Naugaon to thanas Naugaon or Bandaikhara, Manda and Mahadebpur.

Rajshahi.

2. This notification will take effect on and from the 22nd June 1905.

R. W. CARLYLE,
Offg. Chief Secy. to the Govt. of Bengal.

JAIL DEPARTMENT.

No. 5644, dated Calcutta, the 24th May 1905.—Deputy Magistrate Monmotho Nath Mukerji made over charge of the Bogra Jail to Civil Surgeon Kunja Lal Sanyal on the forenoon of the 16th May 1905.

No. 5748, dated the 27th May 1905.—Assistant Surgeon Chandra Kanta Chakravarti made over charge of the Chapra Jail to Captain A. Gwyther, I.M.S., on the forenoon of the 25th April 1905.

W. J. BUCHANAN,
Inspector-General of Prisons, Bengal.

CIVIL MEDICAL DEPARTMENT, BENGAL.

No. 825D., dated Darjeeling, the 20th May 1905.—Second-grade Assistant Surgeon Hira Lal Sinha, Second Assistant Chemical Examiner to Government, Calcutta, is allowed privilege leave for two months under article 260, Civil Service Regulations, with effect from the date on which he avails himself of it.

No. 919D, dated Darjeeling, the 25th May 1905.—Third grade Assistant Surgeon Rash Behari Bakai, of the Uluberia Subdivision and Dispensary, in the Howrah District, is allowed an extension of privilege leave for one month, under article 260 of the Civil Service Regulations, with effect from the afternoon of the 3rd May 1905.

No. 943D, dated Darjeeling, the 26th May 1905—Second grade Assistant Surgeon Abinash Chandra Chatterjee is appointed to do supernumerary duty at the Medical College Hospital, Calcutta, until further orders, with effect from the forenoon of the 17th May 1905.

No. 977D, dated Darjeeling, the 27th May 1905.—The following list of 4th-year students of the Campbell Medical School who have passed the final examination for Hospital Assistants is published for general information:—

1.	Phani Bhusan Roy ...	... Second Division.
2.	Shiva Nath Karmakar ...	... Ditto.
3.	Bibhuti Bhusan Roy ...	... Ditto.
4.	Bamandeb Chakravarti ...	... Ditto.
5.	Jagatpati Roy ...	... Ditto.
6.	Tirtha Nath Ghosh ...	.. Ditto.
7.	Dhirendra Nath Mitra ...	... Ditto.
8.	Naresh Chandra Biswas ...	... Ditto.
9.	Hari Sadhan Sarkar ...	... Ditto.
10.	Nanda Gopal Bandyopadhyay	... Ditto.
11.	Sharat Chandra Roy ...	... Ditto.
12.	Chandi Charan Chattopadhyay	... Ditto.

S. H. BROWNE, M.D., COL., I.M.S.,
Inspector-General of Civil Hospitals, Bengal

TREASURY NOTICES.

UNCOVENANTED DEPUTY COLLECTOR MAULVI MAHAMMAD HABIBULLAH has been placed in charge of the Bhagalpur Treasury and is authorized to draw bills on other treasuries.

D. J. MACPHERSON, *Commissioner.*

COMMR.'S OFFICE, BHAGALPUR, *the 20th May 1905.*

UNCOVENANTED DEPUTY COLLECTOR MAULVI SYED MOHAMED ABUL HAYAT, and not Syed Mohamed *Abdul* Hayat, as published in Part I, page 854 of the *Calcutta Gazette* of the 10th May 1905, is placed in charge of the Muzaffarpur Treasury and authorized to draw bills on other treasuries.

C. R. MARRIOTT, *Addl. Commissioner.*

PATNA COMMR.'S OFFICE, BANKIPORE, *the 27th May 1905.*

HIGH COURT NOTICES.

NOTIFICATION.

THE following order of His Majesty in Council of the 20th March 1905, amending the procedure to be followed in England in appeals to His Majesty in Council where a Respondent fails to enter an appearance, is published for general information.

HIGH COURT;
ENGLISH DEPARTMENT
(CIVIL),
The 26th May 1905.

By order of the High Court,
A. P. MUDDIMAN,
Registrar.

AT THE COURT AT BUCKINGHAM PALACE.

The 20th day of March 1905.

PRESENT:

THE KING'S MOST EXCELLENT MAJESTY.

ARCHBISHOP OF CANTERBURY. | LORD SUFFIELD.
LORD PRESIDENT. | SIR WILLIAM WALROND.

WHEREAS there was this day read at the Board a representation from the Judicial Committee of the Privy Council, dated the 16th day of March 1905, and in the words following, viz.:—

"The Lords of the Judicial Committee having taken into consideration the practice under which an Appeal to Your Majesty in Council cannot, in the absence of a special Order

in that behalf made by their Lordships, be set down for hearing *ex parte* as against a Respondent to the Appeal who has failed to enter an Appearance thereto in the Registry of the Privy Council unless the Appellant shall have previously obtained from their Lordships two successive Orders commonly known as 'Appearance Orders' requiring the said Respondent to enter an Appearance to the Appeal within the periods by the said Orders respectively limited, and shall have duly published the said Orders by affixing the same on the Royal Exchange and elsewhere in the usual manner and unless the said periods so limited by the said Orders as aforesaid shall have expired. And being of opinion that the said practice is inconvenient and ought in certain cases and subject to certain conditions to be dispensed with. Their Lordships do this day agree humbly to recommend to Your Majesty to order as follows, that is to say :—

"1. That where a Respondent to an Appeal to Your Majesty in Council whose name has been entered on the Record of the Appeal by the Court admitting the Appeal fails to enter an Appearance to the Appeal in the Registry of the Privy Council, and it appears from the Transcript Record in the Appeal or from a Certificate of the Officer of the Court transmitting the said Transcript Record to the Registrar of the Privy Council that the said Respondent has received notice of the Order admitting the Appeal to Your Majesty in Council or of the Order of Your Majesty in Council giving the Appellant special leave to appeal to Your Majesty in Council (as the case may be) and has also received notice of the dispatch of the said Transcript Record to the Registrar of the Privy Council the Appellant shall not, subject to any direction by their Lordships to the contrary, be required to take out Appearance Orders calling upon the said Respondent to enter an Appearance in the Appeal, and the Appeal may, subject as aforesaid, be set down for hearing *ex parte* as against the said Respondent at any time after the expiration of three calendar months from the date of the lodging of the Appellant's Petition of Appeal in like manner as if the said Appearance Orders had been taken out by the Appellant and the times thereby respectively limited for the said Respondent to enter an Appearance had expired.

"2. That where a Respondent to an Appeal to Your Majesty in Council whose name has been brought on the Record of the Appeal by an Order of Your Majesty in Council fails to enter an Appearance to the Appeal in the Registry of the Privy Council and it appears from the Transcript Record or from a Supplementary Record in the Appeal or from a Certificate of the Officer of the Court transmitting the said Transcript Record or Supplementary Record to the Registrar of the Privy Council that the said Respondent has received due notice of any intended application to Your Majesty in Council to bring him on the Record as a Respondent to the Appeal, the Appellant shall not, subject to any direction by their Lordships to the contrary, be required to take out Appearance Orders calling upon the said Respondent to enter an Appearance in the Appeal, and the Appeal may, subject as aforesaid, be set down for hearing *ex parte* as against the said Respondent at any time after the expiration of three calendar months from the date on which the said Respondent shall have been served with a copy of Your Majesty's Order in Council bringing him on the Record of the Appeal in like manner as if the said Appearance Orders had been taken out by the Appellant and the times thereby respectively limited for the said Respondent to enter an Appearance had expired.

"3. That nothing herein contained shall be deemed to affect the power of their Lordships to order the Appellant in an Appeal referred by Your Majesty to their Lordships to take out Appearance Orders or to be excused from taking out Appearance Orders in any case in which their Lordships shall think fit so to order and generally to give such directions as to the time at which and the conditions on which an Appeal so referred as aforesaid shall be set down as in the opinion of their Lordships the circumstances of the case may require.

"4. That this Order shall apply to all Appeals in which the Petition of Appeal shall be lodged after the date hereof."

HIS MAJESTY having taken the said representation into consideration was pleased, by and with the advice of HIS PRIVY COUNCIL, to approve thereof and of what is therein recommended, whereof all persons whom it may concern are to take notice and govern themselves accordingly.

A. W. FITZROY.

Sheriff's Office, the 31st May 1905.

NOTICE is hereby given that the Third Criminal Sessions of the year 1905 of the High Court of Judicature at Fort William in Bengal, for the Town of Calcutta and Factory of Fort William, and the places subordinate thereto, will be held at the Court-house, in the Town of Calcutta, on Monday, the third day of July next, at 11 o'clock in the forenoon, and thenceforward from day to day until the said Sessions be over. And it is hereby proclaimed that all persons who are to prosecute any of the prisoners to be brought up for trial at the said Sessions be present then and there to prosecute.

E. CABLE, *Sheriff.*

সরিফ আফিস, সন ১৯০৫ সাল তারিখ ৩১শে মে।

সকলকে সমাচার দেওয়া যাইতেছে যে যুবে বাঙ্গালার কোর্ট উইলিয়ম দুর্গের অধীন শহর কলিকাতায় ও অন্যান্য স্থানের ফৌজদারী বিচার নিষ্পত্তি জন্য আগামী সন ১৯০৫ সালের ৩রা জুলাই সোমবার বেলা ১১ ঘটিকার সময় এবং যে পর্য্যন্ত সেশিয়ানের কার্য্য শেষ না হয় প্রতিদিন উক্ত সময়ে কলিকাতায় হাইকোর্টের আপন আদালত ঘরে সন ১৯০৫ সালের তৃতীয় ক্রিমিনেল সেশিয়ান বসিবেক এবং এতদ্দ্বারা প্রচার করা যাইতেছে যে, যে সকল ব্যক্তি কোন ফরেদির বিরুদ্ধে ফৌজদারী মিছিল করিবেক তাহারা উক্ত স্থানে উক্ত সময়ে হাজির থাকিয়া মোকদ্দমা করে ইতি।

ইঃ কেবল, সরিফ।

EDUCATION DEPARTMENT, BENGAL.

Subordinate Educational Service.

The 27th May 1905.—Babu Durga Prasad Tewari, Deputy Inspector of Schools, Hazaribagh, under orders of transfer to Bhagalpur (Class IV), having returned to duty on the forenoon of the 9th May 1905, the unexpired portion of the leave granted to him under the orders of the 3rd May 1905 is cancelled.

Babu Ram Gopal Mukerjea, Sub-Inspector of Schools, Midnapore (Class V), is appointed, subject to the consent of the District Board of Midnapore, to act as Additional Deputy Inspector of Schools, Sonthal Parganas, during the absence, on deputation, of Babu Krishna Lal Sadhu, M.A., or until further orders.

V. H. JACKSON,
Asst. Director of Public Instruction, in charge.

RULES OF THE GOVERNMENT CUTTACK SURVEY SCHOOL.

I.—The school is under the general supervision of the Principal of the Ravenshaw College.

II.—The number of admissions to the first year class of each year is limited to 50, of whom only 20 can be other than Uriyas or Bengalis domiciled in Orissa; but should the number of eligible Uriya (or domiciled Bengali) candidates fall below 30, the vacancies thus occurring can be given to non-Uriya candidates.

III.—The session usually begins in the last week of June. All applications for admission should be made to the Principal of the Ravenshaw College on or before the 15th June previous to the commencement of the session, and should furnish the following particulars:—

(*a*) Name, address and occupation of father and guardian.

(*b*) Race and religion.

(*c*) Age of the candidate (which must not exceed 20 years).

IV.—Candidates for admission must submit satisfactory evidence that they have read up to the first class of a High English School or, in the case of Uriya (or domiciled Bengali) candidates, have at least passed the Middle English Examination or have passed the annual examination of the 5th class of a High School.

V.—Each candidate must produce at the time of admission a certificate showing good moral character, and also a medical certificate of good and sound health from an Assistant Surgeon.

VI.—No student who fails to pass the final examination of a Survey School or does not bring a transfer certificate under the ordinary transfer rules will be permitted to join the second year class after the 31st July.

VII.—The admission fee is rupee one and the monthly fee rupee one, but Government scholars receive free tuition.

VIII.—There are six Government scholarships, which are awarded each year to the best Uriya students and domiciled Bengalis permanently settled in Orissa only on the results of the annual examination of the first year class.

IX.—The course of study in the school extends over two years, and the students are required to attend at least 75 per cent. of the working days.*

X.—The successful students at the annual examination of the first year class are usually promoted to the second year class; but those who wish may, at their option, leave the school with an amin certificate from the Head-master of the school. The successful students of the final survey standard examination receive certificates from the Director of Public Instruction, Bengal.

The curriculum of each year is detailed below:—

FIRST YEAR CLASS.

Mathematics.

Arithmetic, whole; Algebra up to fractions; Geometry, Books I, II and III.
Mensuration—Lines and Surfaces.

Drawing.

Practical Geometry; Geometrical figures; Construction of scales—simple and diagonal; Map-drawing; Plotting; and Conventional signs.

Surveying.

Theoretical—Chain, compass, plane-table, and levelling.
Practical—Survey of open country with chain only.
Survey of village and town with chain and compass.
Professional system of cadastral survey.
Levelling.

Estimating.

Of simple buildings.

Projection.

Of lines and planes.

* Both in the theoretical and in the practical subjects.

SECOND YEAR CLASS.

Mathematics.

Algebra, up to simple equations.
Geometry, the first six books.
Mensuration, the whole.
Trigonometry, solution of triangles and use of logarithms.

Drawing.

Orthographic projections; Engineering drawings (plans, elevations and sections of buildings, arches, culverts and bridges); plotting of maps of fields on different scales; colouring and enlarging and reducing maps, &c.

Surveying.

Theoretical and practical.
Theodolite survey (Gale's Traverse system and triangulation); plane-table; levelling and laying out of curves, &c.

Engineering.

Elements of road-making, including laying out of curves.

Estimating.

Buildings, culverts and earthwork.

V. H. JACKSON,
Asst. Director of Public Instruction, in charge.

The 6th May 1905.

N.B.—There is a boarding-house for mufassil students; but the number of beds available is limited and applications for them should be made in time to the Resident Superintendent of the Hostel.

ORDERS BY THE VICE-CHANCELLOR AND SYNDICATE OF THE CALCUTTA UNIVERSITY.

THE undermentioned candidates have passed the First Examination in Arts, 1905:—

FIRST DIVISION.

(In order of merit.)

1	Biswas, Charuchandra*	Presidency College.
2	Datta, Rebatiraman*	Chittagong College.
3	Laha, Jatindrakumar*	Presidency College.
4	Bandhyopadhyay, Krishnadhan	Ditto.
5	Chattopadhyay, Ushapati*	Hooghly College.
6	Mukhopadhyay, Kantichandra	General Assembly's Institution.
7	Sanyal, Girijaprasanna*	Presidency College.
8	Kar, Siteschandra	Dacca College.
9	Gupta, Krishnabihari*	Krishnagar College.
10	Sen, Gatikrishna*	Uttarpara College.
11	Chattopadhyay, Kshetrapal*	Presidency College.
	Ray, Hemchandra	Pabna Institution.
13	Bhattacharyya, Pramatharanjan.*	Victoria College, Comilla.
14	Sengupta, Sureschandra*	Dacca College.
15	Maung Set	Rangoon College.
16	T. Saravanamutto	Jaffna Central College.
17	Mandal, Bhutnath	Burdwan Raj College.
18	Mahd. Abul Ahsan†	Calcutta Madrasah.
19	Mitra, Kalipada*	Burdwan Raj College.
20	Pradhan, Prakaschandra	Ravenshaw College, Cuttack.
21	Bhattacharyya, Rameschandra	City College, M. Branch.
22	Mitra, Amulyakrishna	F. C. Scotland's Institution and Duff College.
23	Basu, Bhupendrachandra*	Presidency College.
	Chakrabarti, Kumudchandra*	Bangabasi College.
25	Majumdar, Satischandra*	Ravenshaw College.
	Sen, Arun	St. Xavier's College.
27	Das, Basantakumar	General Assembly's Institution.
28	Maitra, Asutosh*	Ditto.
29	Pal, Radhabinod*	Rajshahi College.
30	De, Haripada*	Bangabasi College.
	Pal, Rajanikumar*	Chittagong College.
32	Chakrabarti, Sasikanta*	Dacca College.
33	Goswami, Ramanimohan	Krishnagar College.
	Ray, Upendrakumar*	Dacca College.
35	Hensman, W. N.	Jaffna College.
36	Bandyopadhyay, Kaminikumar	D. U. M. College, Hazaribagh.
37	Chattopadhyay, Surendranath	Cotton College, Gauhati.
38	Biswas, Kshitischandra	Presidency College.
	Ghosh, Saratchandra*	Hughli College.
40	Basu, Rasbihari*	Dacca College.
	„ Sahayram*	Hughli College.
42	Bhandari, Upendranath*	Burdwan Raj College.
	Mahapatra, Bhagaban	Ravenshaw College.
44	Chattopadhyay, Bidhubhushan*	Bangabasi College.
45	Bhattacharyay, Sarojaksha	Presidency College.
	Ghosh, Kedarnath	Narail Victoria College.
47	Gangopadhyay, Harendranath	F. C. of Scotland's Institution and Duff College.
48	Sinhachaudhuri, Srischandra	P. M. College, Tangail.
49	Maitra, Upendranath	Bangabasi College.
	Ray, Lalitmohan	Hughli College.
	Sen, Satischandra*	Dacca College.
52	Konar, Dibakar	Presidency College.
53	Kilattamby, Nagalingam	Teacher Roll Jaf T S.
	Karmakar, Hemchandra*	Brajamohan Institution, Barisal.
	Srikrishna Prasad	T. N. Jubilee College, Bhagalpur.
56	Basu, Anilprakas*	Presidency College.
	Ghosh, Nirbharpriya*	Bethune College.
58	Chattopadhyay, Phanibhushan*	Victoria College, Cooch Behar.
	Ray, Ramanath*	General Assembly's Institution.
60	Ghosh, Jadunath*	Rajshahi College.
61	„ Pannalal*	Hughli College.
62	Kumar, Krishnakisor	Metropolitan Institution.
63	Basu, Surendranath * No. I	Dacca College.
64	Datta, Jaminikanta*	Burdwan Raj College.
	Sanyal, Upendrasaran*	Hughli College.
66	Ghosh, Prakaschandra	General Assembly's Institution.
67	Mukhopadhyay, Prakaschandra	L. M. S. Institution, Bhowanipur.
68	Ghosh, Nalininath*	Bangabasi College.
	Mukhopadhyay, Satyacharan	Presidency College.
	Ray, Jaydeb*	Berhampur College.
71	Lahiri, Bhabataran*	Presidency College.
72	Bandyopadhyay, Gurudas*	St. Xavier's College.
	Das, Manmathanath	Hughli College.
74	Das, Bipinbihari*	Chittagong College.
	Mark, Krishnachandra	City College, Calcutta.
76	Ataur Rahman, II‡	Cotton College, Gauhati.
	Ray, Anantakumar*	General Assembly's Institution.
78	Chandra, Sudhirchandra	Bangabasi College.
	Chattopadhyay, Amulyachandra	City College, Calcutta.
80	Chakrabarti, Haripada*	General Assembly's Institution.
	Sen, Mohinimohan*	Berhampur College.
82	Jagannath Prasada †	Presidency College.
	Sarkar, Jyotirindramohan	Brajamohan Institution, Barisal.

SECOND DIVISION

(In Alphabetical Order.)

	Abdul Mouid Khan*	Dacca College.
	Abdul Qayyum	Calcutta Madrasah.
	Abdul Shakur	Ravenshaw College.
	Abu Bakir	Rangoon College.
	Adak, G.	Ripon College.
	Adhya, Banamali	Sanskrit College.
	Aditya, Umeschandra	Brajamohan Institution, Barisal.
	Ahmad	Calcutta Madrasah.
	Ali Muhammad	Calcutta Madrasah.
	Bagchi, Hemantakumari*	Bethune College.
	„ Sachchidananda*	Presidency College.
	Ba Hlaing	Rangoon College.
	Baksi, Dakshinaranjan	Hughli College.
	„ Sureschandra*	General Assembly's Institution.
	Balkrishna Ramchandra Bade	Holkar College, Indore.
	Bandyopadhyay, Asutosh	Berhampur College.
	„ Chunilal	Bangabasi College.
	„ Dakshinaranjan.*	Cotton College, Gauhati.
	„ Dwijendranath	Burdwan Raj College.
	„ Haripada*	Ditto.
	„ Jaharilal*	Ripon College.
	„ Kalikumar	Berhampur College.
	„ Lalitkumar*	Hughli College.
	„ Phanindrabhushan.	City College, Calcutta.
	„ Pramadacharan.*	Roll Cal. D. 9.
	„ Praphullachandra.	Krishnagar College.
	„ Prabhulla-[illegible]	Presidency College.
	„ Rameschandra	Brajamohan Institution, Barisal.
	„ Rantideb*	Presidency College.
	Barmanray, Mohinimohan	Jagannath College, Dacca.
	Baruya, Sankhadhar	Cotton College, Gauhati.
	Basu, Adyanath	Victoria College, Comilla.
	„ Haradakanta*	St. Xavier's College.
	„ Birendrabhushan*	City College, Calcutta.
	„ Indusekhar	Sanskrit College.
	„ Jogendranath	Jagannath College, Dacca.
	„ Jogindranath*	Krishnagar College.
	„ Kshitischandra	St. Xavier's College.
	„ Mrinalkanti	Metropolitan Institution.
	„ Nirmalchandra*	Cotton College, Gauhati.
	„ Nripendranath	Presidency College.
	„ Pramathanath, II*	Presidency College.
	„ Ramendrakrishna	Presidency College.
	Basu, Saratchandra	Ravenshaw College.
	„ Saratchandra	Hughli College.
	„ Satischandra	Ravenshaw College.
	„ Srischandra*	Ripon College.
	„ Surendranath	T. N. Jubilee College, Bhagalpur.
	„ Surendranath*	Roll Cal. D. 5.
50	Batabyal, Kamallochan	General Assembly's Institution.
	Ba Tin	Rangoon College.
	Bayal, Kunjabihari	Metropolitan Institution.
	Bhaduri, Lalitchandra*	City College, M. Branch.
	„ Panchanan	F. C. of Scotland's Institution and Duff College.
	Bhar, Prabodhchandra	Metropolitan Institution.
	„ Prabodhchandra	Dupleix College, Chandernagar.
	Bhattacharyya, Abaninath*	Sanskrit College.
	„ Akshaykumar	Brajamohan Institution, Barisal.
	„ Ambikacharan *	Roll Cal. D. 6.
60	„ Atulchandra, I	Ripon College.
	„ Ramandas	Sanskrit College.
	„ Bijendragopal*	Victoria College, Cooch Behar.
	„ Birendranath	General Assembly's Institution.
	„ Kalikrishna*	Ditto Ditto.
	„ Kaminath*	City College, Calcutta.
	„ Kshitischandra	St. Xavier's College.
	„ Munindramohan*	Berhampur College.
	„ Nagendranath	Ripon College.
	„ Nanimohan	General Assembly's Institutio
70	„ Panchanan*	Ripon College.
	„ Pramathanath	Sanskrit College.
	„ Radharaman	General Assembly's Institution
	„ Rohinikumar	P. M. College, Tangail.
	„ Surendranarayan	General Assembly's Institution.
	Bhaumik, Parbaticharan	Rajshahye College.
	„ Surendranath*	Ripon College.
	Biswas, Chandrasekhar	Ripon College.
	„ Nandalal	P. M. College, Tangail.
	„ Satischandra	General Assembly's Institution.
80	„ Surendranath*	Victoria College, Cooch Behar.
	Bose, J. G.	F. C. of Scotland's Institution and Duff College
	Bwye, Kate	Roll Sim F. P. I.
	Chaki, Chandramadhab	Victoria College, Cooch Behar.
	Chakrabarti, Dineschandra	City College, M. Branch.
	„ Gobindachandra	Krishnagar College.
	„ Gobindaprasad	Krishna Chandra College, Hetampur.
	„ Haridas*	Narail Victoria College.
	„ Kshirodmohan	Dacca College.
	„ Kumudkanta	City College, M. Branch.

* Passed in Original Composition in Bengali.
† Ditto ditto Hindi.
‡ Ditto ditto Urdu.

	Chakrabarti, Munindrachandra*		Metropolitan Institution.
	,,	Prabhaschandra	... Ripon College.
	,,	Punnachandra	... Rajshahye College.
	,,	Saratchandra*	... General Assembly's Institution.
	,,	Satischandra	... Roll. Cal. D 13.
	,,	Surendrakumar*	... Victoria College, Comilla.
	,,	Sureschandra	... Rajshahye College.
	,,	Upendrakrishna	... Muraricband College, Sylhet.
	Chanda, Taranimohan*	...	... General Assembly's Institution.
	Chandra, Amarial*	...	... F. C. of Scotland's Institution and Duff College.
100	,,	Charuchandra ...	... Bangabasi College.
	Chattopadhyay, Aswinikumar*		Krishnagar College.
	,,	Bhabeschandra	Sanskrit College.
	,,	Dwipendranath	Krishnagar College.
	,,	Gaurbhushan	... Metropolitan Institution.
	,,	Hiralal*	... City College, Calcutta.
	,,	Jogeschandra	Presidency College.
	,,	Jyotishchandra	Brajamohan Institution, Barisal.
	,,	Madhabchandra	Roll. Cal. D. 8.
	,,	Manilal ...	... City College, Calcutta.
110	,,	Narendranath	... Bangabasi College.
	,,	Niranjan	... Bangabasi College.
	,,	Prasadkumar*	Central College, Calcutta.
	,,	Sasadhar	... Rajshahye College.
	,,	Surendranath	... Midnapur College.
	Chaudhuri, Bankimchandra*		... Ripon College.
	,,	Jatindramohan*	... St. Xavier's College.
	,,	Jatindranath*	... Burdwan Raj College.
	,,	Jnanendranath	... Ditto.
	,,	Rakhalchandra	... Roll Hug. W. 19.
120	,,	Upendranath*	... Bangabasi College.
	Damodar Tukaram Mangalmurti		Morris College.
	Das, Anandakisor*	...	... Ripon College.
	,,	Basantakumar	... Bangabasi College.
	,,	Benamie ...	... Private Student Roll Cal. F. P. 5.
	,,	Chandrakumar*	... P. M. College, Tangail.
	,,	Dineschara ...	... Muraricband College, Sylhet.
	,,	Jagadischandra	... Krishnagar College.
	,,	Kalicharan ...	... Ravenshaw College.
	,,	Mahendrachandra	... Brajamohan Institution, Barisal.
130	,,	Phanindranath	... Metropolitan Institution.
	,,	Sudhirkumar	... Duplelx College, Chandernagar.
	,,	Surendrakumar	... Muraricband College, Sylhet.
	,,	Upendranath	... General Assembly's Institution.
	Dasgupta, Binodeswar	...	Brajamohan Institution, Barisal.
	,,	Hemchandra, II	... Jagannath College, Dacca.
	,,	Jatindramohan*	... Ripon College.
	,,	Jatindranath I	... Ripon College.
	,,	Narendranath	... Brajamohan Institution, Barisal.
	,,	Nikunjabihari*	... Ditto ditto.
140	,,	Paresnath ...	... Jagannath College, Dacca.
	,,	Praphullachandra	... Victoria College, Cooch Behar.
	Dasmodak, Rajeswar	...	... Krishnagar College.
	Dastidar, Jatindranath	...	... Chittagong College.
	Datta, Annadacharan	...	... Cotton College, Gauhati.
	,,	Bhupendranath	... General Assembly's Institution.
	,,	Brajasyam*	... Berhampore College.
	,,	Debiprasad	... General Assembly's Institution.
	,,	Dharmadas	... General Assembly's Institution.
	,,	Dwarkanath*	... Dacca College.
150	,,	Gaganchandra*	... Cotton College, Gauhati.
	,,	Harajiban ...	... Bangabasi College.
	,,	Haranchandra*	... St. Xavier's College.
	,,	Hrishikes*	... Hughli College.
	,,	Jaminimkumar*	... Dacca College.
	,,	Kapilchandra	... General Assembly's Institution.
	,,	Rajendralal	... Roll Cal., D. 7.
	,,	Sitalchandra	... Jagannath College, Dacca.
	,,	Sureschandra	... Presidency College.
	De, Jabarial ...	...	... General Assembly's Institution.
160	,,	Jyotischandra ...	... Bangabasi College.
	,,	Nanilal ...	... Presidency College.
	,,	Prabodhchandra*	... Metropolitan Institution.
	,,	Pramathanath	... Ripon College.
	,,	Purnachandra	... Duplelx College, Chandernagar.
	,,	Sachindrakrishna*	... General Assembly's Institution.
	Dhar, Amulyaratan*		... Ripon College.
	,,	Dilipchandra	... Hughli College
	Dozer, Eva ...	...	... Rangoon College.
	Elyatamby Murugesampilly		... Jaffna Central College.
170	Fazlur Rahman	...	... Jagannath College, Dacca.
	Finnimore Alfred	...	... St. Francis deSale's School, Nagpur
	Gangopadhyay, Abinaschandra*		Rajshahye College.
	,,	Hirendranath	... General Assembly's Institution.
	,,	Pankajkumar	... Victoria College, Comilla.
	Ghosh, Asutosh ...	...	... Ravenshaw College.
	,,	Bibhutibhusan*	... Roll Hug. W. 16.
	,,	Dhirendramohan	... Hughli College.
	,,	Jadunath*	... City College, Calcutta.
	,,	Jaladkanti*	... D. U. M. College, Hazaribagh.
180	,,	Jatindramohan	... General Assembly's Institution.
	,,	Joreschandra*	... Ripon College.
	,,	Kailaschandra	... T. N. Jubilee College, Bhagalpur.
	,,	Kalikrishna	... Albert College.
	,,	Lalmohan*	... Ripon College.
	,,	Manindrabhushan	... Ripon College.
	,,	Nirmalchandra	... Uttarpara College.
	,,	Nripendranath*	... General Assembly's Institution.
	,,	Panchanan ...	... General Assembly's Institution.
	,,	Paresnath*	... Metropolitan Institution.
90	,,	Phanibhushan	... Ripon College.
	,,	Prabhaschandra	... Sanskrit College.
	,,	Praphullachandra	... Duplelx College, Chandernagar.
	,,	Prasannachandra	... Muraricband College, Sylhet.
	,,	Sachindramohan	... Presidency College.
	,,	Sukhendranath	... General Assembly's Institution.
	,,	Upendranath	... Jagannath College, Dacca.
	Ghoshal, Girijabhushan*		... General Assembly's Institution.
	,,	Padmaratna*	... City College, Calcutta.
	,,	Satischandra	... Uttarpara College.
200	Gomtiprasad Agnihotri		... Hislop College.
	Goswami, Sureschandra		... Rajshahye College.
	Guha, Pratibha ...	...	Bethune College.
	,,	Rakhalcharan	... General Assembly's Institution
	,,	Sachinath	... Ripon College.
	,,	Satyasaran*	... City College, M. Branch.
	Gupta, Bipinbihari		F. C. of Scotland's Institution, and Duff College.
	,,	Gurudas*	... Ripon College.
	Gupta, Jogeschandra*	...	... Dacca College.
	,,	Narendranath	... General Assembly's Institution.
210	,,	Rameshchandra*	... Jagannath College, Dacca.
	,,	Santoshkumar*	... Berhampore College.
	,,	Sisirendu ...	... Patna College.
	Haldar, Bhudhar*	...	... Ripon College.
	,,	Jitendrakumar*	City College, Calcutta.
	,,	Satyasaran	... Albert College.
	H. Aung Khin	...	... Rangoon College.
	Henderson, R.	...	... Ditto.
	Jageshwar Parshad	...	... D. J. College, Monghyr.
	Jahangirji Edulji Kuar		... Canadian Mission College, Indore.
220	Khan, Surendrachandra	...	... Roll. Hug. W. 2.
	Laha, Rasamay*	...	... F. C. of Scotland's Institution and Duff College.
	Maitra, Madanmohan	...	... Victoria College, Cooch Bihar.
	,,	Nilmani ...	... Narail Victoria College.
	Majumdar, Bhubanmohan		... Jagannath College, Dacca.
	,,	Chandidas ...	... Krishnagar College.
	,,	Prabodhchandra	... General Assembly's Institution.
	,,	Surendranath*	Ditto ditto.
	Mallik, Jagannath	...	... Hughli College
	Mandal, Panchanan*	...	... General Assembly's Institution.
230	Maung Lun Bin	...	... Rangoon College.
	Mg. Ba Din	...	... Baptist College, Rangoon.
	Mg. Po Myin	...	... Rangoon College.
	Misra, Atulchandra	...	... Burdwan Raj College.
	,,	Durgaprasad	... Hislop College.
	,,	Nalinimohan*	... City College, Calcutta.
	,,	Ramchandra	... Hislop College.
	Mitra, Abinaschandra	...	... General Assembly's Institution.
	,,	Akshaykumar	... Ravenshaw College.
	,,	Amulyachandra	... General Assembly's Institution.
240	,,	Asutosh* ...	... C. M. S. College.
	,,	Shibanicharan	... Behar National College, Bankipur.
	,,	Charugopal*	... Metropolitan Institution.
	,,	Jatindranath	... Presidency College.
	,,	Lakshminarayan	... F. C. of Scotland's Institution and Duff College.
	,,	Manmathanath	... General Assembly's Institution.
	,,	Narendranath	... Krishna Chandra College, Hetampur.
	,,	Ramanimohan	... General Assembly's Institution.
	,,	Surendranath*	... Ripon College.
	Modak, Pasupatinath*		... L. M. S. Institution, Bhowanipur.
250	,,	Upendranath	... Metropolitan Institution.
	Muhammad Mohiuddin Ahmed		Pabna Institution.
	Mukerji, Bangabala	...	... Bethune College.
	,,	Victoria ...	... Private Student, Roll Cal. F.P. 3.
	Mukhopadhyay, Anukulchandra*		Midnapur College.
	,,	Banabihari	... Ditto.
	,,	Bholanath	... General Assembly's Institution.
	,,	Bhudeb*	... Burdwan Raj College.
	,,	Bijaymadhab*	F. C. of Scotland's Institution and Duff College.
	,,	Gopalchandra	Brajamohan Institution, Barisal.
260	,,	Gopikisor*	... General Assembly's Institution.
	,,	Jadugopal	... Patna College.
	,,	Jatindranath*	Presidency College.
	,,	Jatindranath	General Assembly's Institution.
	,,	Jitendranath	P. M. College, Tangail.
	,,	Lalmohan	... Bangabasi College.
	,,	Niradchandra*	St. Xavier's College.
	,,	Prabhatnath	... General Assembly's Institution.
	,,	Prabodhchandra	Ditto ditto.
	,,	Rameswar	... Ditto ditto.
270	,,	Satindranath*	Ditto ditto.
	,,	Sibakinkar*	... City College, Calcutta.
	,,	Sitanath*	... Ripon College.
	,,	Susilkumar*	... Hughli College.
	Murali Dhar	...	... D. J. College, Monghyr.
	Nag, Rajanikanta	...	... Jagannath College, Dacca.
	Nallathamby Sampanthar		... Teacher, Roll Jaf. T. 2.
	Nandan, Saratchandra	...	... L. M. S Institution, Bhowanipur.
	Nandi, Annadaprasad	...	... Presidency College.
	Narayan Ramchandra Summandar.		Morris College.
280	Nath, Panchkarilal	...	... Burdwan Raj College.
	Pain, Mahendranath*	...	... Ditto.
	Pal, Aswinikumar*	...	... Brajamohan Institution, Barisal.
	,,	Dinabandhu ...	... City College, M. Branch.
	,,	Kalikrishna ...	... Jagannath College, Dacca.
	,,	Labchandra ...	... Ditto.
	,,	Manmathanath	... Bangabasi College.
	,,	Nagendranath	... P. M. College, Tangail.
	,,	Nikunjabihari	... Burdwan Raj College.
	,,	Prabhaschandra*	... Dacca College.
290	,,	Surendranath*	... Burdwan Raj College.
	Palchandhuri, Jajnachandra		... Muraricband College, Sylhet.
	Palit, Rakhalchandra†	...	... Ravenshaw College.
	Panja, Jaubendranath	...	... Burdwan Raj College.
	P. A. Sam ...	...	... Rangoon College.
	Patni, Hamprasad...	...	... Muraricband College, Sylhet.
	Po Lat ...	...	... Rangoon College.
	Pujari, Sanatan ...	...	... Ravenshaw College.
	Purushe, Govind Jairam	...	Morris College.
	Radhikaprasad Verma	...	... Hislop College.
300	Rahu, K. ...	...	... St. Xavier's College.
	Rakshit, Sobhanbala	...	... Bethune College.
	Ramanlilal Sivadas	...	... Hindu College, Jaffna.
	Ray, Abhaycharan	...	... Albert College.
	,,	Adyanath' ...	... City College, Calcutta.
	,,	Amulyamohan	... Jagannath College, Dacca.
	,,	Bankimchandra	... Victoria College, Cooch Behar.
	,,	Bijaygopal ...	... Roll Cal. D. 11.
	,,	Chandrabhushan	... Midnapore College.
	,,	Charuchandra*	... Brajamohan Institution, Barisal.
310	,,	Charupada ...	... Berhampur College.
	,,	Hemchandra	... Ditto.
	,,	Jyotishchandra	... Presidency College.
	,,	Krishnachandra	... F. C. of Scotland's Institution and Duff College
	,,	Kshitishchandra	... General Assembly's Institution.
	,,	Nagendranath*	... D. U. M College, Hazaribagh.
	,,	Praphullachandra	... Jagannath College, Dacca
	,,	Purnachandra*	... Ripon College
	,,	Saratchandra	... Bangabasi College.
	,,	Satindranarayan	... Presidency College.
320	,,	Satyakumar ...	... Ravenshaw College.

* Passed in Original Composition in Bengali.
† Ditto ditto Uriya.
‡ Ditto ditto Urdu.

Ray, Satyendranath ... ... Presidency College.
" Sudhirchandra ... Dacca College.
" Surendranath .. ... Dacca college.
Raychoudhuri, Baghambar .. Krishna Chandra College, Hetampur.
Reardon, W. A ... ... Rangoon College.
Rudra, Praphullanath* ... . General Assembly's Institution.
Saha, Manomohan* . . General Assembly's Institution.
" Radhikamohan ... Jagannath College, Dacca
Samanta, Harikinkar ... ... General Assembly's Institution.
330 Samuel, M. N. ... . Jaffna College.
Sanyal, Bireswar*... ... ... Berhampore College.
" Mihirlal* . ... Presidency College.
" Sachchidananda .. ... Metropolitan Institution.
" Tarapada .. .. Rajshahi College.
Sarkar, Anukulchandra ... ... Brajamohan Institution, Barisal.
" Janakinath . Victoria College, Comilla.
" Kshitishchandra . .. Metropolitan Institution.
" Mahendranath* ... ... General Assembly's Institution.
" Manmathalal ... ... Bangabasi College.
340 " Phanindranath L. M. S Institution, Bhowanipur.
" Priyabrata ... . Ripon College.
" Rajendranath ... ... Burdwan Raj College.
" Sarojkumar*... ... ... Patna College
" Subimalchandra ... ... Dacca College.
Sarma, Bansibadan* ... . Murarichand College, Sylhet.
Sarmabaruva, Kamakhyaram . Cotton College, Gauhati.
Saw Hla Pru . ... Rangoon College.
S. Chinnathurai .. . Jaffna College.
Seeluna G. I. ... ... Rangoon College.

350 Sen, Amulyabhusan* ... ... Dacca College.
" Bhaktibhusan .. . ... City College, Calcutta.
" Binaybhusan .. .. Berhampur College
" Birendranath .. .. Brajamohan Institution, Barisal.
" Khagendranath* ... Chittagong College.
" Rajkumar . ... Bangabasi College.
" Ranjanlal* .. .. Chittagong College.
" Rebatimohan .. ... Krishnachandra College, Hetampur.
" Tulsicharan* . ... General Assembly's Institution.
Sengupta, Akshaykumar H ... Jagannath College, Dacca.
360 " Annadacharan* Brajamohan Institution, Barisal.
" Binodbihari .. .. General Assembly's Institution.
" Jatindranath .. ... Ditto ditto.
" Lalitkumar ... .. Sanskrit College.
" Radhakanta .. .. City College, Calcutta.
Sreedhar Narayan H ... ... Patna College.
Sil, L. ... . Bishop's College.
Singh, Bijoybelle .. ... Private Student, Roll. Cal. F. P. 6
Sinha, Gangapada .. .. B. N. College, Rankipur.
" Jogalkisor* Roll. Hug. W. 1
370 " Jyotishchandra* .. . F. C. of Scotland s Institution and Duff College.
Sinharay, Nitaichand* ... . Hughli College.
Som, Nirajbasini .. . Private Student, Roll. Cal. F. P. 2.
Suryya Narayan, Kumar ... T N Jubilee College, Bhagalpur.
Syed Fasal Hassant Patna College.
Toke Gyi ... .. . Rangoon College.
T O. Mahamed Ally .. Ditto.
377 Zarafatulla Sircar* . .. Rajshahi College.

THIRD DIVISION.

In alphabetical order.

Abdul Aziz* . ... Teacher Roll Kri. T 2.
Abdul Ohab ... . . Cotton College, Gauhati
Abdul Rauf ... ... Ripon College.
Abdur Rahman .. ... Ditto.
Abdur Razak ... ... Jagannath College, Dacca.
Abu Naim Muhammad Bazlul Karim. Ripon College.
Abu Wazzafer* ... Calcutta Madrasah
Acharyyachoudhuri, Priyakumar Dacca College.
Adhikari, Basantakumar ... L. M. S. Institution, Bhowanipur
10 " Jatindranath, I* ... Rajshahi College.
Attabuddin Ahmed ... ... Hughli College.
Ata Ali Ahmed ... ... Burdwan Raj College
Ain, Surendrachandra ... ... City College, Mymensingh Branch.
Akmal Khan ... . Albert College.
A. K. M. Makram Billa Chowdhuri. Jagannath College, Dacca
Akoskar Devidas Krishna Hislop College.
Ali Akbar ... ... Calcutta Madrasah.
Ali Akbar ... ... D. J. College, Monghyr.
Ali Azam . ... Victoria College Comilla.
20 A. N. Coomarasamy .. . . Jaffna Central College.
Anwar Uddin Khandker* Victoria College, Cooch Behar
Anwarul Quadir . ... . Albert College.
Ashrafuddin Ahmed ... Jagannath College, Dacca.
Aung Gyaw U . . Rangoon College.
Babban Jee ... . Doveton College.
Bagchi, Harendranath Ripon College.
" Hemantakumar .. ... P. M. College, Tangail.
" Jatindranath ... .. Central College, Calcutta
" Kalibilas ... Krishnagar College.
30 " Surendrachandra Victoria College, Cooch Behar
" Upendranath ... .. F. C. of Scotland's Institution and Duff College.
Ba Han ... ... Rangoon College.
Bajpai, Jagadis* .. .. Ripon College.
Bakst, Ramdas* .. ... Krishnagar College.
Baliram Ambadas Agasti ... ... Morris College.
Bandyopadhyay, Atulkrishna Midnapur College.
" Basantakumar H. Ripon College.
" Bhupendranath Albert College.
" Bishnupada Krishnagar College
40 " Charuchandra* F. C. of Scotland's Institution and Duff College.
" Charuchandra Metropolitan Institution.
" Dijen Bangabasi College.
" Durgadas ... Roll Hug. W. 3
" Gopalchandra Jagannath College, Dacca
" Hariprasanna Dacca College
" Harendrakrishna * Metropolitan Institution.
" Induprakas* . Behar National College, Bankipur.
" Janakinath Ripon College.
" Jatindranath Jagannath College, Dacca
50 " Jitankrishna Midnapur College.
" Jitendranath* General Assembly's Institution.
" Kalinath .. Roll Hug. W. 29
" Kanailal ... Bangabasi College.
" Krishnachandra. Ditto.
" Krishnaprasad F. C of Scotland's Institution and Duff College.
" Lalitmohan .. Midnapur College.
" Makhansopal Ripon College.
" Makhanlal ... F C. of Scotland's Institution and Duff College
" Manindranath* General Assembly's Institution.
60 " Mrigendranath* Burdwan Raj College.
" Munindranath General Assembly's Institution.
" Nanigopal Ripon College
" Prakaschandra Bangabasi College.
" Pramathanath Ditto
" Praphulla chandra.* Dacca College.
" Ramanimohan City College, M. Branch
" Ramgati .. Roll Hug. W. 5
" Ramgopal Berhampur College
" Samarendra ... General Assembly's Institution.
70 " Subodhchandra* Bangabasi College.
Bardhan, Hrishikes ... ... Jagannath College, Dacca.
" Jasodakisor ... ... Victoria College, Comilla.

Barkakati Gauriswar . . Cotton College, Gauhati.
Barlingaysbankar Nilkanthrao . Morris College.
Barman, Jitendranath . ... City College, Calcutta.
Baruya, Adharlal . ... Bangabasi College.
" Guruprasad . Cotton College, Gauhati.
" Phanibhushan ... ... Ditto.
Basak, Amarchand ... ... Jagannath College, Dacca.
80 " Balakrishna ... Pabna Institution.
" Gopinath ... ... Jagannath College, Dacca.
Basu Amarnath ... ... Uttarpara College.
" Brajendranath Central College, Calcutta.
" Hemendranath ... .. Bangabasi College.
" Jitendralal ... ... Ripon College
" Jnanendranath ... ... Ravenshaw College.
" Jyotishchandra ... Teacher Roll Oco. T. 1
" Kalidas .. ... Jagannath College, Dacca
" Kantichandra* ... Dacca College
90 " Khagendranath ... Jagannath College, Dacca.
" Kunjabihari ... .. Brajamohan Institution, Barisal.
" Manindrabhushan Ripon College.
" Manindrakumar . ... Bangabasi College.
" Manindralal ... ... Ditto.
" Manindramohan .. ... Jagannath College, Dacca.
" Nagendranohan . Midnapur College.
" Prabhatchandra Burdwan Raj College.
" Prabhatchandra ... Victoria College, Cooch Bihar.
" Rakhaldas ... Roll Cal D 30
100 " Rangalal* . . .. Dacca College.
" Satyakumar P. M. College, Tangail.
" Sitalchandra Ripon College.
" Surendranath ... ... General Assembly's Institution
" Suryyakumar ... Victoria College, Comilla.
Batabyal, Jatindranath Uttarpara College
Ba Tun ... ... Rangoon College.
Ba Win ... ... Ditto.
Bedajna Satischandra ... Jagannath College, Dacca.
Bera, Harendrakumar ... Burdwan Raj College
110 Bhaduri, Girindrachandra Metropolitan Institution.
" Pramathanath Rajshahye College
Bhagwat Prasad . St Xavier's College.
Bhattacharyya, Abinaschandra* Bangabasi College
" Adityakumar . Sanskrit College.
" Anukulchandra Pabna Institution.
" Aparapada ... Rajshahye College
" Asutosh ... .. Jagannath College, Dacca.
" Balaram General Assembly's Institution.
" Debendrachandra ... Dacca College
120 " Dwijaraj .. Sanskrit College.
" Ekkari .. Midnapur College.
" Girijasankar Dacca College.
" Guruprasad ... Jagannath College, Dacca.
" Hariram ... Burdwan Raj College.
" Hemchandra ... Jagannath College, Dacca.
" Hemchandra .. General Assembly's Institution.
" Jagadischandra Victoria College, Comilla.
" Jogindrachandra ... City College, M. Branch.
" Jyotishchandra Jagannath College, Dacca.
130 " Kalidayal ... Ditto.
" Matilal, I ... Ripon College.
" Nileswar* ... Rajshahye College
" Saradachandra Victoria College, Comilla.
" Sasikumar Ditto.
" Satischandra ... City College, M. Branch
" Sudhiranth* ... Ripon College.
" Surendranath F. C. of Scotland's Institution and Duff College.
" Taraknath . City College, M Branch.
Bhaumik, Banwarilal . Rajshahye College.
140 " Girindranath Ditto.
" Lakshmikanta Victoria College, Comilla.
" Satischandra ... ... Ripon College
Bishwanath Charan ... ... Patna College
Biswas, Jatindramohan ... ... Ripon College
" Manmdralal Roll Hug W 22
" Nanilmla* Bethune College.
" Rajendralal .. C M S College.
" Ramanimohan ... .. Jagannath College, Dacca
E Buttress ... ... Teacher, Roll Jab. T. 1
150 Chakrabarti, Asutosh ... Pabna Institution.
" Birajmohan . Dacca College.

* Passed in original Composition in Bengali.
† Ditto ditto Urdu.

Chakrabarti, Charuchandra ... Ripon College
,, Harihar ... ... Bangabasi College
,, Jadulal .. ... F. C. of Scotland's Institution and Duff College
,, Jagadischandra P. M. College, Tangail.
,, Jaychandra ... City College, M Branch.
,, Jitendranarayan .. F. C. of Scotland's Institution and Duff College.
,, Jitendranath D. U. M College, Hazaribagh.
,, Jnanaranjan* ... Victoria College, Cooch Behar.
160 ,, Jyotishchandra ... P. M. College, Tangail.
,, Kaminikumar Brajamohan Institution, Barisal
,, Madhusudan ... Jagannath College, Dacca
,, Manindranath .. C. M. S. College.
,, Manoranjan . City College, M. Branch.
,, Nandakumar ... Sanskrit College.
,, Nanilal ... L. M. S. Institution, Bhowanipur.
,, Nilkanta .. ... Victoria College, Cooch Bihar.
,, Pulinbihari ... Brajamohan Institution, Barisal.
,, Ramanimohan Cotton College, Gauhati.
170 ,, Ramdhan Brajamohan Institution, Barisal.
,, Rameshchandra .. City College, Middle Branch.
,, Santipada ... T. N. Jubilee College, Bhagalpur.
,, Srischandra ... Cotton College, Gauhati
,, Sureschandra ... Ripon College.
,, Taranimohan ... Victoria College, Cooch Bihar.
Chandra, Amritalal ... Dupleix College, Chandernagar.
Chattopadhyay, Dwijendranath Krishnagar College.
,, Gadadhar . Dacca College
,, Hitalal Central College, Calcutta.
180 ,, Jitendranath* Chittagong College.
,, Jogeschandra L. M. S. Institution, Bhawanipur.
,, Kalicharan Uttarpara College.
,, Lalitmohan, II Bangabasi College.
,, Nandalal . Ripon College.
,, Rajendrakumar Ditto.
,, Narendramohan* Burdwan Raj College.
,, Rajendranath Ditto ditto.
,, Saradaprasad ... L. M. S. Institution, Bhawanipur.
,, Tinkari .. General Assembly's Institution.
190 Chaudhuri, Abhaycharan . Burdwan Raj College.
,, Annadaprasad Jagannath College, Dacca.
,, Aswinikumar ... Jagannath College, Dacca.
,, Baradakanta ... Ditto ditto.
,, Bholanath ... ... Rajshahi College.
,, Bidhubhushan ... Jagannath College, Dacca.
,, Indrakumar ... Ditto ditto.
,, Jnanadaranjan . Chittagong College.
,, Jogendrachandra . Ripon College.
200 ,, Jyotishchandra ... Krishnagar College.
,, Kailaschandra ... Jagannath College, Dacca.
,, Kalidas* . ... Brajamohan Institution, Barisal.
,, Kanailal ... .. Burdwan Raj College.
,, Lalitchandra .. City College, M. Branch.
,, Panchanan .. ... Burdwan Raj College.
,, Pramathanath .. Rajshahi College.
,, Pyarimohan .. Burdwan Raj College.
,, Rajanikanta ... Ditto.
,, Santidaranjan .. Victoria College, Comilla.
210 ,, Saradakanta Jagannath College, Dacca.
,, Sarojkumar ... Ravenshaw College.
,, Satischandra* ... Victoria College, Cooch Behar.
,, Tarnicharan Ditto ditto.
Cox, Gertrude Florence . ... Private Student, Roll Cal. F. F. S.
C Saravanamuttu ... ... Jaffna Central College.
Daniel, E. F .. .. Jaffna College.
Das, Gokulanauda .. . . Ravenshaw College.
,, Harihar ... ... Ditto.
,, Hemendrakumar General Assembly's Institution.
220 ,, Jatindralal* ... ... Victoria College, Comilla.
,, Jogindranath* ... .. Ripon College.
,, Kailasankar ... Chittagong College.
,, Kamalakanta ... .. Brajamohan Institution, Barisal.
,, Mahendranath* ... .. Metropolitan Institution.
,, Manindranath City College, Calcutta.
,, Nandakisor ... ... Jagannath College, Dacca.
,, Pareschandra ... . Dacca College.
,, Ranilal* ... ... Metropolitan Institution
,, Ratnchandra, I ... .. Jagannath College, Dacca.
230 ,, Srischandra* ... ... Bangabasi College.
,, Surendralal ... ... Chittagong College.
,, Sureschandra* .. ... Midnapur College.
,, Syamacharan ... F. C. of Scotland's Institution and Duff College.
,, Udaynath .. Ravenshaw College.
Dasgupta, Abinaschandra ... Brajamohan Institution, Barisal.
,, Amritalal . ... Ditto ditto.
,, Asutosh . ... Ditto ditto.
,, Atulchandra ... ... Jagannath College, Dacca.
,, Bijaychandra ... Ditto.
240 ,, Hemchandra, I ... Ditto.
,, Jajneswar .. ... Brajamohan Institution, Barisal.
,, Jatindrakumar ... Ripon College.
,, Jatindranath, II Ditto
,, Jogeschandra, I .. Jagannath College, Dacca.
,, Kaliprasanna .. ... Brajamohan Institution, Barisal
,, Kshitimohan ... ... Dacca College
,, Kshitishchandra ... P. M College, Tangail
,, Narendrasankar Metropolitan Institution.
,, Nisikanta Ripon College.
250 ,, Rameschandra, I . Brajamohan Institution, Barisal.
,, Rameschandra, II ... Ditto, ditto
,, Rameschandra, III ... Ditto, ditto.
,, Rameschandra ... Cotton College, Gauhati
,, Surenjan ... .. Behar National College, Bankipur
Dastidar, Brajakanta ... Bankabasi College.
Datta, Anukulchandra ... ... Midnapur College.
,, Bhupaticharan .. ... Ripon College.
,, Harendrachandra ... Jagannath College, Dacca.
,, Hemchandra ... Presidency College.
260 ,, Hemchandra .. ... Brajamohan Institution, Barisal.
,, Jagannath Cotton College, Gauhati.
,, Kunjabihari ... . Victoria College, Comilla.
,, Rajaninath ... ... Bankabasi College.
,, Rameschandra ... ... Ripon College.
,, Saktipada ... . Burdwan Raj College.
,, Satischandra . ... Dupleix College, Chandernagore.
,, Satischandra ... ... Roll Cal. D. 16
,, Satischandra . ... Roll Hug. W 24
,, Suchalal ... ... Midnapur College.

*270 Datta, Surendrakumar . Jagannath College, Dacca.
,, Surendranath .. ... Presidency College.
,, Suryyakumar . .. Victoria College, Comilla.
Dattachaudhuri, Samatulchandra. Brajamohan Institution, Barisal.
Do, Abinaschandra ... . Dacca College.
,, Amarnath ... ... General Assembly's Institution.
,, Annadaprasad ... ... Roll Hug. W. 12
,, Aparnacharan ... Bangabasi College.
,, Asutosh ... Midnapur College.
,, Aswinikumar* ... Brajamohan Institution Barisal.
280 ,, Bankimchandra . ... Patna College.
,, Bipinbihari . ... Cotton College, Gauhati.
,, Gopalchandra ... Ravenshaw College.
,, Hemchandra ... ... Rajshahye College.
,, Jaminikanta . . Jagannath College, Dacca.
,, Kalidas ... ... Ditto.
,, Maheschandra ... Victoria College, Comilla.
,, Manoranjan ... ... Ditto.
,, Nepalchandra* .. Narail Victoria College.
,, Nilmani ... ... Metropolitan Institution.
290 ,, Prabhatchandra ... ... Jagannath College, Dacca.
,, Pranballabh . ... Ditto.
,, Sasibhushan ... ... Bangabasi College.
Deb, Sambhushan .. ... Ripon College.
Deonandan Misra . ... D. U. M. College, Hazaribagh.
Deshpande Purushottom Rajaram ... . Morris College.
Dhar, Brajalal . ... City College, Calcutta.
,, Jitendramohan ... . Brajamohan Institution, Barisal.
,, Niradbhushan ... ... Ripon College.
,, Srischandra ... ... City College, M. Branch.
300 Dowerah, Atulchandra ... Cotton College, Gauhati.
Durga Prasad . Patna College.
Ekka, Khristokumar ... ... D U. M College, Hazaribagh.
Frianuddin Ahmed .. ... Albert College.
Farrakh Ahmed Chittagong College.
Gangadharkrishna Rao Herdas Hislop College.
Gangopadhyay, Apurbakumar ... General Assembly's Institution.
,, Chin'aharan* ... Jagannath College, Dacca.
,, Hemchandra . Metropolitan Institution.
,, Jitendranath F. C. of Scotland's Institution and Duff College.
310 ,, Khagendra-chandra. Bangabasi College.
,, Sailendrakumar Sanskrit College.
,, Surendranath ... City College, Calcutta.
Ghatak Saratchandra ... . Doveton College.
Ghosh, Abanikanta ... Jagannath College, Dacca.
,, Akshaykumar* ... .. Narail Victoria College.
,, Amritalal ... Bangabasi College.
,, Anangamohan ... . City College, M. Branch.
,, Anilkrishna ... ... F. C. of Scotland's Institution and Duff College
,, Bankimchandra .. ... Doveton College.
320 ,, Bhupalchandra .. . Hughli College.
,, Bibhutibhushan ... Midnapur College.
,, Bilaschandra ... City College, Calcutta.
,, Binodkumar ... ... Doveton College.
,, Birendrachandra ... General Assembly's Institution.
,, Birendranath ... ... Bangabasi College.
,, Bishnudas* ... Hughli College.
,, Chhakulal ... ... Uttarpara College.
,, Haridas ... General Assembly's Institution.
,, Jagatbandhu .. .. Victoria College, Cooch Behar.
330 ,, Jatindramohan .. Ripon College.
,, Jayantakumar . City College, M. Branch.
,, Jibankrishna . Metropolitan Institution.
,, Jnanendranath Ripon College.
,, Kalipada ... ... Bangabasi College.
,, Kanailal ... .. F. C. of Scotland's Institution and Duff College
,, Kirancbandra* ... City College, Calcutta.
,, Kshitischandra ... .. L. M. S. Institution, Bhawanipur.
,, L. .. .. St Xavier's College.
,, Lalitmohan . Central College, Calcutta.
340 ,, Manindrachandra .. ... Victoria College, Cooch Behar.
,, Matilal* ... . Brajamohan Institution, Barisal.
,, Mrigendranath ... Burdwan Raj College.
,, Nagendranath II . ... Ripon College.
,, Nalendranath ... Ditto.
,, Nrityagopal . Bangabasi College.
,, Prakaschandra ... .. Presidency College.
,, Pramathanath ... .. General Assembly's Institution.
,, Rajendrakumar ... ... City College, Calcutta.
350 ,, Rajendranath ... ... Roll Hug. W. 7
,, Ramchandra ... . Ravenshaw College.
,, Satischandra* ... ... Bangabasi College.
,, Satischandra ... Krishna Chandra College, Hetampur.
,, Satyendrakumar General Assembly's Institution.
,, Satyendranath ... ... F. C. of Scotland's Institution and Duff College
,, Saurendranath ... ... Presidency College.
,, Sisarajitmohan Krishnagar College.
,, Surendrachandra ... ... Jagannath College, Dacca.
,, Surendrakumar ... ... Roll Cal. W. 1
,, Surendramohan . ... Victoria College, Cooch Behar.
360 ,, Upendranath ... .. Albert College.
Ghoshal, Asutosh ... . Roll Hug. W. 21
,, Dharmadas Burdwan Raj College.
Gocal Nadir Nesser Wanjee Canadian Mission College, Indore.
Gohain, Umacharan .. ... Cotton College, Gauhati.
Gopal Tatyaji Kunte Hislop College
Goswami, Akshaykumar ... .. Uttarpara College
,, Dineschandra .. City College, M Branch.
,, Sushilkumar . Victoria College, Cooch Behar.
Guha, Abinaschandra ... ... Ditto, ditto.
370 ,, Akshaykumar ... ... Rajshahi College.
,, Asutosh .. ... Victoria College, Cooch Behar,
,, Durgakumar ... Ditto, Comilla.
,, Horambakumar ... ... Jagannath College, Dacca
,, Satindranath .. ... Brajamohan Institution, Barisal.
,, Surendranath ... Jagannath College, Dacca
,, Jnanadacharan ... . Ditto ditto.
,, Kumudbandhu ... Brajamohan Institution, Barisal
,, Manindranath Jagannath College, Dacca.
Guhabiswas, Harendrakumar ... City College, M. Branch.
380 Gupta, Abanikumar ... ... Bangabasi College.
,, Amritalal* ... ... Hughli College.
,, Dwijendranath ... Bankabasi College.
,, Jogeschandra ... . Ripon College.
,, Kaminimohan ... Victoria College, Comilla.
,, Narendranath .. ... Brajamohan Institution, Barisal.
,, Satyacharan ... ... Hughli College.

* Passed in Original Composition in Bengali.
† Passed in Original Composition in Uriya.

Gupta, Sureschandra ... ... Albert College.
Hajra, Satischandra ... ... F. C. of Scotland's Institution and Duff College.
Haldar, Kshirodbihari ... ... Metropolitan Institution.
Harmali Biswas ... ... Calcutta Madrasah.
Hiralal Sitaram Tenguria ... Hislop College.
Jadu Bansilal ... ... Patna College.
Jagannath Prasad Sinha ... D. J. College, Monghyr.
Jagati, Padmacharan ... ... Ravenshaw College.
J. A. Tissaverasinghe ... Jaffna Central College.
Joardar, Sasankamohan ... ... Ripon College.
Joseph, R. G. ... ... Rangoon College.
Judah, N. J. ... ... St. Xavier's College.
Jugalkrishna Singh ... ... J. D. College, Monghyr.
Jwala Prasad ... ... Patna College.
Kazi Fazlul Karim ... ... Victoria College, Comilla.
Kameshwari Prasad ... ... D. U. M. College, Hazaribagh.
Kanapathipillai Somasundaram Hindu College, Jaffna.
Kandappar Pampanthar ... Ditto.
Kanjilal, Brajendranath ... Ripon College.
Kar, Balabhadra ... ... Teacher, Roll Mid. T. 1
,, Kshirodchandra ... ... Roll Hug. W. 23
,, Surendranath ... ... Jagannath College, Dacca.
Karmakar, Basantakumar ... P. M. College, Tangail.
,, Bhubanmohan ... Jagannath College, Dacca.
,, Jogendrachandra Victoria College, Comilla.
,, Kailaschandra ... Jagannath College, Dacca.
Karthegesu Ponniah ... Hindu College, Jaffna.
Kathirippillai Kumarialı ... Ditto.
K. Blankainayagam ... ... Jaffna Central College.
Khan, Haricharan ... ... Rajshahye College.
,, Nagendrachandra ... Dacca College.
,, Pramathanath ... ... Bangabasi College.
Kirishnar Chinniah ... ... Hindu College, Jaffna.
Kuarnandan Sahay ... ... Patna College.
Kuladacharan Sej ... ... Midnapur College.
Kumar, Debendranath ... ... Ripon College.
Kundu, Makhanlal ... ... Victoria College, Cooch Behar.
,, Narendranath* ... ... Bangabasi College.
Kuru M. Shanmukha Sundram Ripon College.
Kusari, Syamaprasanna ... Brajamohan Institution, Barisal.
Kyaw, U ... ... Rangoon College.
L. Abreu ... ... Ditto.
Laha, Lalitmohan ... ... General Assembly's Institution.
Lahiri, Abinaschandra ... ... Rajshahy College,
,, Bhabanikumar ... ... St. Xavier's College.
,, Krishnajiban ... ... Krishnagar College,
,, Ramadu ... ... Ditto.
,, Sushilkumar ... ... City College, Calcutta.
Laskar, Bhabasindhu ... ... Ditto.
Mahamed Abdus Satter ... Rajshahi College.
Mahanti Ghanasyam ... ... Ravenshaw College.
,, Kedarnath ... ... Ditto.
Mahendra Prasad ... ... Albert College.
Mahmed Syddiquer Rahman ... Jagannath College, Dacca.
Maiti, Gopinath ... ... Ravenshaw College.
,, Prankrishna ... ... Ripon College.
Maitra, Gunamay ... ... Burdwan Raj College,
,, Jitendranath* ... ... Central College, Calcutta.
,, Ramprasad ... ... Ripon College.
,, Umanath* ... ... Rajshahi College.
,, Umeschandra* ... ... Jagannath College, Dacca.
Malkuddin Ahmed ... ... Rajshahi College.
Majumdar, Dineschandra* ... Berhampur College.
,, Dinesharan ... ... General Assembly's Institution.
,, Gopendrasundar* ... Rajshahi College.
,, Harendrakumar ... General Assembly's Institution.
,, Hariranjan ... ... Chittagong College.
,, Hirambakumar ... Victoria College, Comilla.
,, Jajneswar ... ... Rajshahi College.
,, Jaminikanta ... ... Brajamohan Institution, Barisal.
,, Jatindramohan* ... Hughli College.
,, Mahendranath ... Victoria College, Cooch Behar.
,, Praphullachandra ... Burdwan Raj College.
,, Sankardas* ... ... Ravenshaw College.
,, Sasankasekhar ... Jagannath College, Dacca.
,, Sibadas ... ... Krishnagar College.
Malik, Akinchanpran ... ... Patna College.
,, Srischandra ... ... Hughli College.
M. Ambalawanan ... ... Jaffna Central College.
Mandal, Harendranath ... ... Roll Hug. W. 23
,, Radhaballabh ... ... General Assembly's Institution.
,, Raimohan ... ... Jagannath College, Dacca.
Manna, Manilal ... ... Ripon College.
Martand Sakharam Hajarnavis Hislop College.
Matiar Rahman ... ... Dacca College.
Maung Ba ... ... Rangoon College.
Maung Ba Gyi ... ... Ditto.
Mg. Ba Htin ... ... Baptist College, Rangoon.
Maung Ba Thein, II ... ... Rangoon College.
Maung Gale ... ... Baptist College, Rangoon.
Maund Po Thin ... ... Rangoon College.
Maung Tha Zan ... ... Ditto.
Maung Zan ... ... Ditto.
M. Canapathi Pillai ... ... Jaffna Central College.
Md. Abdul Majid ... ... Rajshahi College.
Minus, Mack ... ... Rangoon College.
Misra, Biswambhar† ... ... Ravenshaw College.
Mitra, Bhupendragopal ... General Assembly's Institution.
,, Bhupeschandra ... ... L. M. S. Institution, Bhawanipur.
,, Brajagopal ... ... Krishna Chandra College, Hetampur.
,, Charuchandra ... ... Victoria College, Cooch Behar.
,, Harekrishana ... ... Burdwan Raj College.
,, Jitendranath ... ... Bangabasi College.
,, Pramodkumar ... ... Metropolitan Institution.
,, Saikendralal ... ... Bhumihar Brahman College, Muzaffarpur.
,, Shibaprasad ... ... Roll Hug. W. 6
,, Taraseswarnath ... ... Patna College.
Mohammad Karim Bakhsh ... Brajamohan Institution, Barisal.
Muhammad ... ... Calcutta Madrasah.
,, Abu Calsat ... ... Ripon College.
,, Hayat ... ... Calcutta Madrasah.
,, Yacob ... ... Burdwan Raj College.
,, Zahurul Huq ... Bhumihar Brahman College, Muzaffarpur.
Mukutmani, Bidhubhushan Rajshahi College.
Mukhopadhyay, Amrendranath Roll Hug. W. 20
,, Anathnath ... F. C. of Scotland's Institution and Duff College.
,, Anantakumar ... Burdwan Raj College.
,, Asutosh ... Ripon College.
,, Asutosh ... Bangabasi College.
Mukhopadhyay, Bholanath ... Roll Hug. W. 30
,, Bibhutibhushan* Bangabasi College.
,, Bidhubhushan* Ripon College.
,, Bijaygopal ... Metropolitan Institution.
,, Dhirendranath F. C. of Scotland's Institution and Duff College.
,, Dwijendranath Ripon College.
,, Gaurisankar* ... F. C. of Scotland's Institution and Duff College.
,, Haricharan ... Bangabasi College.
,, Jogeschandra* Uttarpara College.
,, Kisorimohan ... Berhampur College.
,, Kisorimohan ... Ripon College.
,, Manindrachandra. Victoria College, Comilla.
,, Manmathanath General Assembly's Institution.
,, Munindranath Midnapur College.
,, Narayandas ... Bangabasi College.
,, Nibaranchandra Teacher Roll Mid. T. 2
,, Niranjan ... Jagannath College, Dacca
,, Panchanan* ... Bardwan Raj College.
,, Prakashchandra Brajamohan Institution, Barisal.
,, Pulinbihari ... Hughli College.
,, Rampada* ... Ripon College.
,, Sarafchandra* Berhampur College.
,, Saratchandra ... Ripon College.
,, Sarojkumar ... Bangabasi College.
,, Saurindranath Ripon College.
,, Sripada ... Ditto.
,, Surendranath* Ditto.
,, Sureschandra ... General Assembly's Institution.
,, Upendrachandra Rajshahi College.
Mustapha, Narendranath ... General Assembly's Institution.
,, Phanibhushan ... Ripon College.
Nag, Jatindrakumar ... ... Midnapur College.
,, Jitendrakumar ... ... Victoria College, Cooch Behar.
Nageshwadhuri, Narendrakrishna General Assembly's Institution.
Nandi, Asutosh ... ... Rajshahi College.
,, Chandrakumar* ... ... Jagannath College, Dacca.
,, Digendrakumar ... ... Dacca College.
,, Kamalmohan ... ... Jagannath College, Dacca.
,, Nibaranchandra ... ... P. M. College, Tangail.
Narayanchaudhuri, Rameschandra. Brajamohan Institution, Barisal.
Narayan Janardan Karanne ... Holkar College, Indore.
Narayan Laxman Rao Puranik ... Hislop College.
Narsingh Prasad ... ... Behar National College, Bankipur.
Nath, Rajendralal ... ... Jagannath College, Dacca.
Nayak, Gokoknath ... ... Ravenshaw College.
,, Purushottam ... ... Hislop College.
Newa Lal Jha ... ... T. N. Jubilee College, Bhagalpur.
Niyogi, Bijaykumar ... ... Roll Hug. W. 16
,, Hemkantha ... ... P. M. College, Tangail.
,, Jitendranath ... ... Bangabasi College.
,, Lalitkumar ... ... Victoria College, Cooch Behar.
Pal, Gagnachandra ... ... Jagannath College, Dacca.
,, Karamohan ... ... Teacher Roll, Dacca T. 8.
,, Janakinath* ... ... Roll Cal. D. 29
,, Lalitmohan ... ... F. C. of Scotland's Institution and Duff College.
,, Saratkumar* ... ... Presidency College.
,, Satischandra ... ... F. C. of Scotland's Institution and Duff College.
Pal, Sudhansubhushan ... ... Ripon College.
,, Surendranath* ... ... Victoria College, Comilla.
Panda, Brindaban ... ... Ravenshaw College.
Parmeshwary Dayal ... ... Behar National College, Bankipur.
Parsidh Narayan ... ... Ditto ditto.
Pati, Lalmohan† ... ... Ravenshaw College.
Patranabis, Surojkumar ... ... Metropolitan Institution.
Gopalcharan † ... ... Ravenshaw College.
Paul ... ... Baptist College, Rangoon.
Phukan, Nilmani ... ... Cotton College, Gauhati.
Poddar, Jatindramohan ... ... Jagannath College, Dacca.
Ponnambalam Valuppillai ... Hindu College, Jaffna.
Po Sein, II† ... ... Rangoon College.
Prasanta Rao § ... ... Ravenshaw College.
Premchand Sakharam Kadam ... Canadian Mission College, Indore.
Quah, S. ... ... Rangoon College.
Raghubans Kumar ... ... Behar National College, Bankipur.
Raghunandan Sahaya ... ... D. J. College, Monghyr.
Rai Aung ... ... Rangoon College.
Raja Sundaram Coomara Swamy Hindu College, Jaffna.
Rajeshwary Prasad ... ... Presidency College.
Ram Bahadur Lall ... ... Patna College.
Ramchandra Ramanuja Das ... Teacher Roll Kat. T. 2
Ramkrishna Keshao Khaty ... Morris College.
Ramprasad Deshmukh ... ... Hislop College.
Raut, Srikanta ... ... Roll Hug W. 17
Ray, Abinaschandra* ... ... Brajamohan Institution, Barisal.
,, Abinaschandra ... ... Victoria College, Cooch Behar.
,, Amritalal ... ... Metropolitan Institution.
,, Asutosh ... ... Pabna Institution.
,, Binodbihari ... ... City College, Calcutta.
,, Birendranath ... ... Rajshahi College.
,, Bireswar ... ... Brajamohan Institution, Barisal.
,, Gopimohan ... ... Dacca College.
,, Hemchandra* ... ... General Assembly's Institution.
,, Hemantakumar ... ... Bangabasi College.
,, Hemranjan ... ... Berhampur College.
,, Jaminikumar ... ... Victoria College, Comilla.
,, Jatindranath ... ... T. N. Jubilee College, Bhagalpur.
,, Krishnendranath ... ... General Assembly's Institution.
,, Kumudbandhu ... ... Jagannath College, Dacca.
,, Lalmohan ... ... Rajshahi College.
,, Manmathakrishna ... ... Victoria College, Cooch Behar.
,, Manmathanath ... ... Bhumihar Brahman College, Muzaffarpur.
,, Manimohan ... ... Ditto ditto, ditto.
,, Nirudchandra ... ... Metropolitan Institution.
,, Parbaticharan ... ... Jagannath College, Dacca.
,, Prabodhchandra ... ... Ripon College.
,, Prathullachandra ... ... City College, M. Branch.
,, Rajendralal ... ... Dacca College.
,, Saradakanta ... ... Victoria College, Comilla.
,, Saratchandra ... ... Pabna Institution.
,, Sibaprasad ... ... Behar National College, Bankipur.
,, Surendranath ... ... City College, M. Branch.
,, Surendranath ... ... Midnapur, College.
,, Upendranath ... ... Presidency College.
Raychaudhuri Bhupendrakumar* L. M. S. Institution, Bhawanipur.

* Passed in original Composition in Bengali 1905.
† Passed in original Composition in 1905 in Uriya.

620	Raychaudhari, Bijanlal	... Bangabasi College.
	,, Lalitkumar	.. Presidency College.
	,, Sudhiranjan	.. Brajamohan Institution, Barisal
	,, Sudhirchandra*	City College, Calcutta.
	Rayguru, Satyagopal	B N College, Bankipur.
	Rofiuddin Ahmed ...	.. Hughli College
	Rudra, Jogeschandra	Chittagong College.
	Saderuddin Ahamed	... Rajshahi College.
	Saha, Atulchandra ...	Presidency College.
	,, Bahuballabh	General Assembly's Institution
630	,, Kailaschandra ...	Victoria College, Comilla.
	,, Purnachandra	Jagannath College, Dacca
	,, Pyarimohan ...	... P M. College, Tangail.
	Sahai, Shivanandant ...	D U. M. College, Hazaribagh
	Saikia, Rameswar	... Victoria College, Cooch Behar
	Sain, Hanseswar	Ravenshaw College.
	Samanta, Jugalkisor	... Roll Hug, W 8.
	Sanyal, Ajitnath	.. Rajshahi College.
	,, Bhabatosh ..	... Victoria College, Cooch Behar
	,, Jogeschandra	... Ditto ditto.
640	,, Nagendranath*	Ditto ditto.
	,, Surendranath	.. Rajshahi College
	Sarbajna, Jamunikanta*	... Narail Victoria College.
	Sarkar, Asutosh ...	.. Brajamohan Institution, Barisal
	,, Bankubihari ...	... Pabna Institution.
	,, Debadideb ...	Ripon College.
	,, Gajendrakumar ..	Rajshahi College.
	,, Kesabchandra	Jagannath College, Dacca
	,, Manmathanath ...	... P. N. Jubilee College, Bhagalpur.
	,, Nibaranchandra	.. Jagannath College, Dacca
650	,, Ramanimohan	... Rajshahi College.
	,, Ramaprasanna ..	... Cotton College, Gauhati.
	,, Satischandra ...	... Burdwan Raj College.
	,, Satyakinkar ..	... Krishna Chandra College, Hetampur.
	,, Tejendrasinha	Rajshahi College,
	Sarma, Ambikanath ...	Teacher, Roll Gau T. I.
	,, Rajanikanta ..	... Murarichand College, Sylhet.
	Sayed Shaikhul Moshaekh	... Cotton College, Gauhati
	Sefatulla Sircar* ...	... Rajshahi College.
	Sen, Abinaschandra*	.. Victoria College, Cooch Behar.
660	,, Amulyakumar	Jagannath College, Dacca
	,, Anilkumar ...	Roll Hug, W. 15
	,, Asutosh	Bangabasi College
	,, Basantakumar ..	City College, M Branch.
	,, Bhubanchandra	... Jagannath College, Dacca.
	,, Birendrakumar ...	.. Chittagong College
	,, Dinabandhu*	Victoria College, Cooch Behar.
	,, Girischandra	... Victoria College, Comilla.
	,, Harjiban ...	... Chittagong College.
	,, Hemantakumar ...	Bangabasi College.
670	,, Hirendranath ...	... City College, M. Branch.
	,, Jogeschandra.	... Dacca College.
	,, Kaminimohan* ...	... Bangabasi College.
	,, Keabilal	... Victoria College, Cooch Bihar.

	Sen Nalinikumar* ...	Metropolitan Institution.
	,, Prantosh ...	.. L M S Institution, Bhawanipur.
	,, Praphullachandra I	... Dacca College.
	,, Rachindranath	City College, Calcutta.
	,, Samadhar* ...	.. Cotton College, Gauhati.
	,, Satischandra ..	t.. Chittagong College.
680	,, Sureschandra ...	... Jagannath College, Dacca.
	,, Tarakchandra* ...	General Assembly's Institution.
	,, Upendranath	Bangabasi College.
	Sengupta, Akshaykumar I	... Jagannath College, Dacca.
	,, Asutosh ...	Sanskrit College.
	,, Atulchandra* ...	Dacca College.
	,, Ramacharan	.. Victoria College, Cooch Behar.
	,, Rankimohandra*	.. Ripon College.
	,, Birendranath*	Brajamohan Institution, Barisal.
	,, Birendranath I	City College, M. Branch.
	,, Dhirendramohan	Bangabasi College.
690	,, Dwijapada* ...	... Ripon College
	,, Rajendralal*	... Jagannath College, Dacca.
	,, Sachindrakumar	... Ditto ditto.
	,, Samarendrakisor	... City College, Calcutta.
	,, Saratchandra ...	... Brajamohan Institution, Barisal.
	,, Satischandra	... Sanskrit College.
	,, Saurendubhushan*	. Presidency College.
	,, Sukhabindu ...	... General Assembly's Institution.
	Set, Girijabhushan	.. Ditto ditto.
700	,, Jogendranath ...	... Ditto ditto
	Sil, Niranjankumar ..	... Bangabasi College.
	,, Rajkumar	... Jagannath College, Dacca.
	,, Sindhubasi ..	Dupleix College, Chandernagore.
	Sinha, Ardhendubhushan	Presidency College.
	,, Gopendranarayan	.. Ditto.
	,, Jogendranath ...	Bangabasi College.
	,, Kamalkrishna*	... Rajshahi College.
	,, Krishnaprasad	... Burdwan Raj College.
	,, Nagendranath ...	... Victoria College, Comilla.
710	,, Nimaichand*	. General Assembly's Institution.
	,, Satyaranjan ...	... Hughli College.
	,, Utankabhushan ...	... Roll Hug. W.
	Siva Prasad	... T. N. Jubilee College, Bhagalpur.
	Shivanandan Misra ...	... Patna College.
	S. M. Hafeez ...	Ditto.
	Smith, G E ...	... Doveton College
	S. Moniuddin .. .	Hislop College, Nagpur.
	Som, Surendranath ...	... Victoria College. Cooch Bihar.
	So Pe	.. Rangoon College.
720	S Ponniah .	... Jaffna College.
	Stoddart W. I.	.. St. Xavier's College.
	Syed Akbar Ali	... Hughli College.
	,, Dafarukh Ali ...	Ravenshaw College, Cuttack.
	Thi Han	... Rangoon College.
	T Subramanian	Jaffna Central College.
	Velravappilly Kandiah ...	Hindu College, Jaffna.
727	Vandenburg, C. H. ...	... Bishop's College.

* Passed in original Composition in Bengali
Ditto, ditto in Urdu.

K. C. BANURJI,
Registrar.

SENATE HOUSE,
The 29th May 1905.

ORDERS BY THE VICE-CHANCELLOR AND SYNDICATE OF THE CALCUTTA UNIVERSITY.

THE undermentioned candidates have passed the B.A. Examination:—

HONOUR LISTS.

(These lists are arranged in order of merit.)

(E) indicates 1st division in English.
(P) " " " " Philosophy.
(H) " " " " History.
(e) " 2nd " " English.
(p) " " " " Philosophy.
(h) " " " " History.
(l) " " " " Latin.
(s) " " " " Sanskrit.
(pn) " " " " Persian.
(m) " " " " Mathematics.
(c) " " " " Physics and Chemistry.

ENGLISH.

First Division.

Sarkar, Binaykumar (H)*	..	Presidency College.

Second Division.

1	Maitra, Manoranjan (p) (s)*	..	Presidency College.
2	Basu, Nabinchandra*	...	Duff College.
3	Ray, Prafullachandra	...	Presidency College.
4	Sen, Manibhushan (s)	...	Ditto.
5	Chattopadhyay, Sukumar*	...	Ditto.
6	Bandyopadhyay, Hirankumar	...	General Assembly's Institution.
7	Gupta, Atulchandra (P)*	...	Presidency College.
8	Sawdasar Sinha	...	Patna College.
9	Ghoshal, Upendranath (h)	...	Presidency College.
10	Ghosh, Durgadas*	...	General Assembly's Institution.
	Ray, Basantakumar	...	Victoria College, Cooch Behar.
12	Ghosh, Manimohan	...	Krishnagar College.
13	Basu, Prakaschandra	...	Ripon College.
14	Niyogi, Niranjan*	...	Victoria College, Cooch Behar.
	Chandhuri, Jnanendramohan		Presidency College.
16	Sanyal, Nimkanta	...	Berhampur College.
	Nasiruddin Ahmed†	...	Dacca College.
	Pande, Haripada	...	Krishnagar College.
19	Pal, Kshitishchandra (h)*	...	Presidency College.
20	Mukhopadhyay, Hinodlal (p)	...	General Assembly's Institution.
21	Bhattacharyya, Binaykumar	...	Ditto.
	Singh, Mabel	...	Cal., F. P. I, A Course.

PHILOSOPHY.

First Division.

Gupta, Atulchandra (c)*	. .	Presidency College.

Second Division.

1	Ghosh, Khagendra	...	Cal., P. S.
2	Maitra, Manoranjan (e) (s)*	...	Presidency College.
3	Chakrabarti, Nalinchandra	...	Ditto.
4	Datta, Kaminimohan*	...	Brajamohan Institution, Barisal.
5	Sinha, Nandalal (s)*	...	General Assembly's Institution.
6	Pal, Dwijendranath*	...	Duff College.
7	Mukhopadhyay, Hinodlal (e)	...	General Assembly's Institution.
8	Basu, Kirankumar (h)*	...	Presidency College.
9	Saha, Kunjalal	...	Duff College.
10	Laskar, Amritalal	...	Dacca College.
11	Basu, Manomohan (h)*	...	Presidency College.
12	Ray, Amarendranath	...	Ditto.
13	Bandyopadhyay, Hemchandra	..	Ditto.

HISTORY.

First Division.

Sarkar, Binaykumar (E)*	... ...	Presidency College.

Second Division.

1	Ghoshal, Upendranath (e)	...	Presidency College.
2	Basu, Kirankumar (p)*	...	Ditto.
3	Sengupta, Bijaychandra*	...	Ditto.
4	Ray, Nanimdranath	...	Ditto.
5	Bandyopadhyay, Narendranath	...	Duff College.
6	Raychaudhuri, Sunitibhushan	..	Presidency College.
7	Sen, Kshitischandra (c)*	...	Ditto.
8	Basu, Manomohan (p)*	...	Ditto.
	Das, Prabodhkumar	...	General Assembly's Institution.
10	Bandyopadhyay, Krishnamohan	..	Presidency College.

LATIN.

Second Division.

Ghosh, Ajit	... ...	St. Xavier's College.

SANSKRIT.

Second Division.

1	Sen, Manibhushan (e)	...	Presidency College.
2	Satyendranath*	...	Ditto.
3	Maitra, Manoranjan (e) (p)*	...	Ditto.
4	Sinha, Nandalal (p)*	...	General Assembly's Institution.
5	Mitra, Gurunath	...	Duveton College.
6	Datta, Radhaballabh	...	Presidency College.

PERSIAN.

Second Division.

1	S. H. Ahmad Sahrodrdee	...	Patna College
2	Syed Hassan Askeri†	...	Ditto.
3	Syed Abu Taher	...	Hooghly College.
4	Abdur Rahmant	...	Patna College.
5	Nasir-ul-Huq†	...	Teacher, A Course, Kat I 2.

MATHEMATICS.

Second Division.

1	Basu, Krishnabihari*	...	Presidency College.
2	Bala, Asutosh	...	Ditto.
3	Ludra, Saratchandra	...	Duff College.
4	Ghosh, Nareschandra (c)	...	Presidency College.
5	Mukhopadhyay, Asutosh	...	Patna College.
6	Maychandhuri, Jatindranath*	...	General Assembly's Institution.
7	Ray, Matilal	...	Krishnagar College.
8	Nathanael, T. N.	...	Bishop's College.
9	Ghosh, Upendranath*	...	City College.
10	Sarkar, Nagendranath*	...	Ditto.
11	Pal, Kisorilal (c)	...	Ditto.
12	Sengupta, Basantakumar	...	Presidency College.
	Laha, Umacharan	...	Ditto.
	Sengupta, Bhupendrachandra	...	General Assembly's Institution.

PHYSICS AND CHEMISTRY.

Second Division.

1	Ghosh, Phanindranath	...	Bangabasi College.
2	" Nareschandra (m)	...	Presidency College.
3	Chattopadhyay, Upendranath*	...	City College.
4	Pal, Kisorilal (m)	...	Ditto.

PASS LIST.

(This list is arranged in alphabetical order.)

	Abdul Ghaffar Khan	...	Teacher Roll Nag No. 7.
	Abdullah	...	Dacca College.
	Abdullah Abu Sayied	...	Presidency College.
	Abdur Rahim*	...	Ditto
	Aboo Muhammad†	...	Patna College.
	Acharyya, Chintamani	...	Revenshaw College, Cuttack.
	Adhikari, Badyanath	...	Rajshahi College.
	" Hirendrabhushan	...	City College.
	" Hemanganath	...	Metropolitan Institution.
10	" Tarakbandhu	...	Victoria College, Cooch Behar.
	Agarwalla, Jaykrishna Das‡	...	F. C. of Scotland's Institution and Duff College.
	A. Gopikisor Lal‡	...	City College.
	Anant Prasad	...	Presidency College.
	Bagchi, Jitendranath*	...	Ditto.
	Bandyopadhyay, Atulyadhan	...	Ditto.
	" Bipinbihari	...	General Assembly's Institution.
	" Bishnupada	...	Teacher Roll Cal. No. 13.
	" Chintaharan	...	Brojamohan Institution, Barisal.
	" Girischandra*	...	St. Xavier's College.
	" *Hemchandra*	...	Ditto.
	" Jatindranath	...	General Assembly's Institution.
	" Jogindrachandra	..	Dacca College.
	" Kshetragopal	...	Teacher Roll Cal. No. 6.
	" Makhanlal*	...	City College, Calcutta.
	" Manorunjan	...	Ripon College.
	" Nagendnath	...	Ditto.
	" Nikunjabihari*	...	City College.
	" Nirikanta*	...	Metropolitan Institution.
	" Paresnath	...	Bangabasi College.
30	Bandyopadhya, Prabhatchandra	...	Brajamohan Institution.
	" Pradoshnath	...	Presidency College.
	" Radhanath*	...	Metropolitan Institution.
	" Ramnikanta	...	City College.
	" Rajkrishna	...	Metropolitan Institution.
	" Ramlal	...	L. M. S. Institution, Bhowanipur.
	" Rasbihari	...	F. C. of Scotland's Institution and Duff College.
	" Saratchandra	...	L. M. S. Institution.
	" Satischandra	...	Teacher Roll Bar No. 1.
	" Surendranath	...	F. C. of Scotland's Institution and Duff College.
40	" Sushilkumar	...	St. Xavier's College.
	" Taranikanta*	...	Presidency College.
	" Umeschandra	...	Teacher Roll Cal. No. 18.
	Baruya, Ghanakanta	...	Ripon College.
	" Iswarprasad	...	Presidency College.
	" Kasikanta	...	Victoria College, Cooch Behar.
	" Khageswar	...	Ditto ditto.
	Basak, Radhagobinda	...	Dacca College.
	Basu, Abinaschandra	...	Duff College.
	" Bagalaprasanna	...	Duff College.
50	" Bijaykumar	...	Presidency College.
	" Bipinchandra	..	Metropolitan Institution.
	" Dhirendrakrishna	...	Presidency College.
	" Haridas*	...	Rajshahye College.
	" Jitindranath	...	Presidency College.
	" Jitendranath	...	General Assembly's Institution.
	" Jyotindranath	...	Patna College.

*Passed in original composition in Bengali.
† " " " in Urdu.
‡ " " " in Hindi.

Basu, Jyotishchandra ... ... Braja Mohan Institution.
,, Lalmohan ... ... Ripon College.
,, Manindralal ... ... Roll Cal. P No. 6.
60 ,, Nrisinhadas* ... ... Ripon College.
,, Prabhaschandra ... ... Metropolitan Institution.
,, Prabodhkumar ... ... Ditto.
,, Pramathanath ... ... Hughli College.
,, Satischandra* ... ... Teacher, Cal. T 58 A Course.
,, Satischandra ... ... F. C. Scotland's Institution and Duff College.
,, Surendrachandra ... ... General Assembly's Institution.
,, Surendranath ... ... Roll Cal. P. No. 9.
,, Suresmohan ... ... Presidency College.
,, Umaprasanna ... ... General Assembly's Institution.
70 Basumallik, Sailendranath ... ... F. C. of Scotland's Institution and Duff College.
Bateswar Prasad ... ... B. B. College, Muzaffarpur.
Ba Thein ... ... Rangoon College.
Bhananjai Sahay ... ... Roll Cal. P. No. 11.
Bhanja, Manindranath ... ... Presidency College.
Bhattacharyya, Bhabendranath ... Ripon College.
,, Dibakar* ... ... St. Xavier's College.
,, Hemantakumar ... ... Ripon College.
,, Mahimchandra ... ... Braja Mohan Institution.
,, Nanilal ... ... Ripon College.
80 ,, Nisikanta ... ... St. Xavier's College.
,, Prasannakumar ... ... Ditto.
,, Rajanikanta ... ... City College.
,, Santoshchandra ... ... General Assembly's Institution.
,, Satischandra ... ... Dacca College.
,, Tarapada ... ... Krishnath College, Berhampur.
Bhaumik, Kunjabihari ... ... Metropolitan Institution.
Biswas, Hiranmoy* ... ... Dacca College.
,, Priyanath ... ... Victoria College, Cooch Behar.
Bonarjee, Vernon M ... ... St. Xavier's College.
90 Chakrabarti, Amulyacharan ... ... Bangabasi College.
,, Jyotishchandra ... ... Ripon College.
,, Kailaschandra ... ... Metropolitan Institution.
,, Mohinimohan ... ... Braja Mohan Institution.
,, Nilkumar ... ... Dacca College.
,, Nisikanta ... ... Ditto.
,, Priyakanta ... ... Ditto.
,, Rameschandra II ... P. C. of Scotland's Institution and Duff College.
,, Sureschandra ... ... Teacher, Roll Cal. P. No. 2.
Chalihs, Kuladhar ... ... Presidency College.
100 Chanda, Ramanimohan ... ... Dacca College.
Chandra, Basantabihari* ... ... General Assembly's Institution.
,, Kartikchandra ... ... Ravenshaw College, Cuttack.
,, Nidheswarchandra ... ... Ditto.
Chattopadhyay, Amarendranath ... L. M. S. Institution.
,, Bankimbihari ... Ravenshaw College, Cuttack.
,, Benimadhab ... ... St. Xavier's College.
,, Gurudas ... ... P. C. of Scotland's Institution and Duff College.
,, Kesabchandra ... Teacher, Roll Hug. T. 1
,, Nalinirnjan ... ... P. C. of Scotland's Institution and Duff College.
110 ,, Pannalal ... ... General Assembly's Institution.
,, Phanibhushan* ... P. C. of Scotland's Institution and Duff College.
,, Prabodhchandra ... Presidency College.
,, Pramathanath ... Teacher, Roll Pat. T. No. 8.
,, Pyarimohan ... ... Presidency College.
,, Ratneswar ... ... Ravenshaw College, Cuttack.
,, Saratlal ... ... General Assembly's Institution.
,, Somnath* ... ... Presidency College.
,, Sudhirkumar ... L. M. S. Institution.
,, Sushichandra ... ... General Assembly's Institution.
120 Choprha Chhakmal* ... ... Victoria College, Cooch Behar.
Chaudhuri, Mohinimohan ... ... Ripon College.
,, Purnachandra ... ... Ditto.
Cohen, J. S. ... ... St. Xavier's College.
Dandavate Narayan Balvant ... ... Holkar College.
Das, Anadiprasad ... ... Bangabasi College.
,, Basantakumar ... ... General Assembly's Institution.
,, Birajmohan ... ... Victoria College, Cooch Bihar.
,, Brahmapada ... ... City College.
,, Durgacharan ... ... General Assembly's Institution.
130 ,, Guruprasad ... ... Ditto.
,, Hiralal ... ... Ditto.
,, J. ... ... Ravenshaw College, Cuttack.
,, Kaminikanta ... ... Dacca College.
,, Kasinath ... ... Presidency College.
,, Kshirodchandra ... ... Ripon College.
,, Kunjalal ... ... Dacca College.
,, Lakshminarayan ... ... Krishnath College, Berhampur.
,, Nagendralal ... ... Ripon College.
,, Narendranath ... ... City College.
140 ,, Praphullakamal ... ... F. C. of Scotland's Institution and Duff College.
,, Pyarilal ... ... Teacher, Roll Cal. T. 28.
,, Satyendramohan ... ... Dacca College.
,, Umacharan ... ... Ripon College.
Dasgupta, Anantakumar ... ... Victoria College, Cooch-Behar.
,, Anukulchandra ... ... Braja Mohan Institution.
,, Jitendranathkar ... ... City College.
,, Prakaschandra ... ... Braja Mohan Institution.
,, Pramathanath ... ... General Assembly's Institution.
,, Upendrachandra* ... ... Bangabasi College.
150 Datta, Binodebihari ... ... Victoria College, Cooch Behar.
,, Binodechandra ... ... Metropolitan Institution.
,, Chandicharan* ... ... General Assembly's Institution.
,, Debendranath ... ... Hooghly College.
,, Gangacharan ... ... Rajshahi College.
,, Harischandra ... ... Dacca College.
,, Hemendrakisor ... ... City College.
,, Manomohan ... ... Ditto.
,, Nagendrakisor ... ... Braja Mohan Institution.
,, Prabhaschandra ... ... General Assembly's Institution.
160 ,, Pramathalal ... ... P. C. of Scotland's Institution and Duff College.
,, Rajendrakumar ... ... City College, Calcutta.
,, Rajiblochan ... ... Teacher, Roll Cal. T. 30.
,, Saratchandra ... ... Ripon College.
,, Satyendranath ... ... Presidency College.
Dattagupta, Bijaykumar ... ... General Assembly's Institution.
,, Satyendrakumar ... ... Dacca College.
Dattatraya Balwant Saney ... ... Holkar College, Indore.
De, Ayodhyanath ... ... Metropolitan Institution.
,, Brindabanchandra ... ... Victoria College, Cooch-Behar.

170 De, Hemchandra ... ... Presidency College.
,, Jogindrachanda* ... ... City College.
,, Pramathanath* ... ... General Assembly's Institution.
,, Umeschandra ... ... Teacher, Roll Dac. T. No. 11
Deb, Charuchandra ... ... St. Xavier's College.
,, Maheshchandra ... ... Rajshahi College.
Debi Pearshd ... ... Patna College.
Deo Gopal Ramchandra ... ... Hislop College, Nagpur.
Desmukhya, Tarncharan ... ... Ripon College.
Dhanmasath Panna ... ... General Assembly's Institution.
180 Dhar, Biharilal ... ... Ripon College.
,, Gokulnath* ... ... Hughli College.
Dhol, Surendarnath* ... ... Central College, Calcutta.
Dhondo Govind Pundalik ... ... Holkar College, Indore.
Dowerah, Sadananda ... ... Victoria College, Cooch Behar.
D'Souza, F. J. ... ... Teacher Roll Nag. T. No. 5.
FitzGerald, W. J. ... ... St. Xavier's College.
Gangopadhyay, Hemchandra ... General Assembly's Institution.
,, Manmathanath ... F. C. of Scotland's Institution and Duff College.
,, Narayanchandra* ... General Assembly's Institution.
,, Syamakanta ... Victoria College, Cooch-Behar.
190 Gasphoh, L. ... ... Bishop's College.
Ghosh, Abinaschandra ... ... St. Xavier's College.
,, Amarnath* ... ... General Assembly's Institution.
,, Basantakumar ... ... Hughli College.
,, Brajendranath ... ... Presidency College.
,, Charuchandra ... ... T. N. Jubilee College, Bhagalpur.
,, Debendranath ... ... F. C. of Scotland's Institution and Duff College.
,, Girischandra ... ... T. N. Jubilee College, Bhagalpur.
,, Jaminimohan ... ... Presidency College.
200 ,, Jatindranath ... ... Ditto.
,, Joreschandra ... ... General Assembly's Institution.
,, Kalidas, II ... ... Ripon College.
,, Nagendranath ... ... Bangabasi College.
,, Narayanchandra ... ... Teacher Roll Cal. T. No. 52.
,, Narendranath ... ... Ripon College.
,, Panchanan* ... ... Ditto.
,, Rameschandra ... ... Dacca College.
,, Ramaprasad* ... ... City College.
,, Sachindranath ... ... Patna College.
210 ,, Sailendranath* ... ... F. C. of Scotland's Institution and Duff College.
,, Satyendranath* ... ... Patna College.
,, Satyendranath ... ... Metropolitan Institution.
,, Sitanath ... ... F. C. of Scotland's Institution and Duff College.
,, Surendranath ... ... Dacca College.
,, Surendranath ... ... Victoria College, Cooch Behar.
,, Surendranath* ... ... Metropolitan Institution.
Ghoshchaudhuri, Manoranjan ... Teacher, Roll Dac. T. No. 9.
Ghosal, Jatindranath ... ... Bangabasi College.
,, Sureschandra ... ... City College.
220 Goenka, Badridas ... ... Presidency College.
Goswami, Ghanakanta ... ... Victoria College, Cooch Behar.
,, Saratchandra* ... ... Ripon College.
,, Satyadas ... ... Presidency College.
Guha, Amulyakrishna ... ... Dacca College.
,, Asutosh ... ... City College.
,, Birendranath ... ... Presidency College,
,, Jnanendrachandra ... ... Ditto
,, Sachindrachandra ... ... Dacca College.
,, Saratkumar* ... ... Presidency College.
230 ,, Satyasaran ... ... Braja Mohan Institution, Barisal.
Gupta, Dairendranath ... ... Bangabasi College.
,, Jaminikumar ... ... St. Xavier's College.
,, Kalcharan ... ... Private Student, Roll Dac. p. No. 1.
,, Rajendranath ... ... F. C. of Scotland's Institution and Duff College.
,, Satischandra ... ... City College.
,, Sureschandra ... ... Ravenshaw College, Cuttack.
Hajra, Janakiram ... ... Teacher, Cal. T. 14 A Course.
Haldar, Jyotibhushan* ... ... Teacher, Roll Cal. T. No. 29.
Hari Narain ... ... Ripon College.
240 Harkh Narayan ... ... B. N College, Bankipur.
Jagadhar Prasad ... ... T. N. Jubilee College, Bhagalpur.
Jagdwipa Sahay ... ... Ditto ditto.
Jambhekar Laxman Balvant ... ... Holkar College, Indore.
Jha, Jogindranath ... ... Rajshahi College.
,, Sivakumar ... ... T. N. Jubilee College, Bhagalpur.
Jugal Kisor Narayan ... ... Patna College
Karmakar, Dineschandra ... ... Krishnath College, Berhampur.
Kazi Abdul Wahab ... ... Ripon College.
Keshao Vishwas Deoskar ... ... Teacher Roll Nag T. No. 3.
250 Khalilur Rahman† ... ... Patna College.
Khanabis, Jogeschandra ... ... Braj mohan Institution, Barisal.
Khastgir, Nagendralal ... ... City College.
Kundu, Batukrishna ... ... Rajshahi College.
,, Krishnachandra ... ... General Assembly's Institution.
Lahiri, Jnanadeprasanna ... ... Hughli College.
Leeladhar Laxman Deokhar† ... ... Canadian Mission College, Indore.
Manadev Prasad Sinha ... ... B. N. College, Muzafferpur.
Mahamed Ibrahim ... ... Ripon College.
Mahanti Sachucharan ... ... Presidency College.
260 Mahomed Azizur Rahman ... ... Dacca College.
Maiti, Praphullachandra ... ... Presidency College.
Maitra, Surendramohan ... ... St. Xavier's College.
,, Surendranath ... ... Rajshahi College.
Majumdar, Charuchandra ... ... Ripon College.
,, Indujyoti ... ... Presidency College.
,, Kasikanta ... ... L. M. S. Institution.
,, Matilal ... ... Rajshahi College.
,, Saratkumar ... ... Brajamohan Institution, Barisal.
,, Surendranath ... ... F. C. of Scotland's Institution and Duff College.
270 ,, Upendranarayan ... ... City College.
Mallik, Ekkarl ... ... Teacher, Cal. T. 5 B. Course.
,, Kumudranjan* ... ... City College, Calcutta.
Manohar Ramchandra Bobaday ... Morris College, Nagpur.
Maung U. Gyaw ... ... Rangoon College.
Md. Nasir Alam ... ... Patna College.
,, Yasin Ali ... ... St. Xavier's College.
Misra, Bageswar‡ ... ... Teacher, Roll Cal. T. No. 8.
,, Brajabandhu§ ... ... Ravenshaw College, Cuttack.
Mitra, Chandrakumar ... ... Teacher, Roll Cal. T. 7. B. Course.
280 ,, Durgakumar ... ... Dacca College.
,, Jnanendrabhushan ... ... Roll Cal. P. No. 10.
,, Jogeschandra* ... ... Presidency College.
,, Jyotishchandra ... ... City College, Calcutta.
,, Kalyankumar ... ... Teacher, Roll Dac. T. No. 6.
,, Nagendranath ... ... Krishnath College, Berhampur.
,, Phanibhushan ... ... City College.
,, Phanindrachandra ... ... F. C. of Scotland's Institution and Duff College.

* Passed in Original Composition in Bengal,
† ,, ,, ,, in Urdu.
‡ ,, ,, ,, in Hindi.
§ ,, ,, ,, in Urdu.

	Mitra	Prakaschandra	General Assembly's Institution.
	,,	Ramanikrishna	Teacher, Roll Cal. T. No. 1.
290	,,	Rameschandra	St. Xavier's College.
	,,	Satischandra II	Ripon College.
	,,	Surendranath	General Assembly's Institution.
	,,	Tarinprasad*	Presidency College.
	,,	Upendrakumar	Dacca College.
	Mobarak Ali		Presidency College.
	Moghe	Vaman Chintaman	Holkar College, Indore.
	Mohammad	Abdul Hafeez†	Presidency College.
	,,	Subhanul Huq†	St. Xavier's College.
	Mudholkar	Shrinivas Govind	Morris College, Nagpur.
300	Muhammad	Abdur Rasheed	Dacca College.
	,,	Hasan	Patna College.
	Muhammud	Jamil Ahmud	Ditto.
	Muhammad	Sadulla	Presidency College.
	Mukhopadhyay,	Amiyanath	Central College, Calcutta.
	,,	Bangendubhushan*	Presidency College.
	,,	Bamakrishnachandra	St. Xaviers' College.
	,,	Bimalchandra	Ripon College.
	,,	Charuchandra	Hughli College.
	,,	Dwijendranath	Presidency College.
310	,,	Jatindrakumar*	Dacca College.
	,,	Jogindranath	Rajshahi College.
	,,	Kalicharan	Roll Cal., Teacher No. 4.
	,,	Khagendranath*	Metropolitan Institution.
	,,	Kshirodchandra	F. C. of Scotland's Institution and Duff College.
	,,	Manmathanath	City College, Calcutta.
	,,	Mohanmohan	General Assembly's Institution.
	,,	Mrigankasekhar	Krishnath College, Berhampur
	,,	Narendranath	Metropolitan Institution.
	,,	Nirmalakanta	Teacher, Roll Dacca T. 10.
320	,,	Nishbhusan	St. Xavier's College.
	,,	Nrisinhakumar	Presidency College.
	,,	Pareshnath	General Assembly's Institution.
	,,	Sailajapada*	Presidency College.
	,,	Surendrachandra	St. Xaviers College.
	,,	Sureschandra	Ripon College.
	Mukunda	Lal	T. N. Jubilee College, Bhagalpur.
	Muneeshwari	Prasad	Ditto.
	Nag,	Bhupeschandra	Dacca College.
	,,	Sudhirchandra	City College.
330	Naha,	Rajendrakumar	B M. Institution, Barrisal.
	Nandi,	Mahimchandra	Presidency College.
	Narayan	Dhondo Lokre	Holkar College, Indore.
	Narayan	Hari Gadre	Ditto.
	Narayan	Vishnu Joshi	Hislop College, Nagpur.
	Nath,	Maheschandra	Ripon College.
	Nicholas,	L. A.	Rangoon College.
	Niyogi,	Kartikcharan*	Presidency College.
	Pal,	Durgaprasanna	General Assembly's Institution,
	,,	Gaurchandra	Ditto.
340	,,	Jyotishchandra	Bangabasi College,
	,,	Kaliprasanna	Teacher, Roll Cal. T. No. 26.
	,,	Surendranath	Teacher, Roll Bau. T. No. 1.
	Pallt,	Bipinbihari	Bangabasi College.
	,,	Haridas	Ditto.
	Paramanand	Tiwari	Patna College.
	Parameswar	Prasad Varma	B. N. College, Bankipur.
	Patranabis,	Sureschandra	Metropolitan Institution.
	Paviad,	Fazluddeen Ahmed	Ripon College.
	Playne,	Anne Elizabeth, Private Student.	Roll Cal. F. P. No. 3.
350	Purushottam	R. Seawipeekar	Hislop College, Nagpur.
	P. Vytilingam		Jaffna College.
	Radha	Krishna Prasad	T. N. Jubilee College, Bhagalpur.
	Raghunandan	Prasad	Teacher, Roll Bha. T No. 8.
	Raghu	Vanshnath Thakur	Teacher Roll Nag. T. No. 6.
	Ram	Narayan Lal	B B. College, Muzaffarpur.
	Ramrup	Prasad	B. B. College, Muzaffarpur.
	Ray,	Abinaschandra	Metropolitan Institution.
	,,	Annadaprasad	Presidency College.
	,,	Bijaykumar	Braja Mohan Institution.
360	,,	Debicharan	Ditto.
	,,	Hemchandra*	Metropolitan Institution.
	,,	Jadunath	Victoria College, Cooch Behar.
	,,	Jatindranath	Bangabasi College.
	,,	Jogendranath*	Krishnath College, Berhampur.
	,,	Jogeschandra	T. N. Jubilee College, Bhagalpur.
	,,	Kunjabihari	Ripon College.
	,,	Narendra K.	Teacher, Roll Cal. T. No. 19.
	,,	Narendranath	Free Church of Scotland Institution and Duff College.
	,,	Purnachandra*	Metropolitan Institution.
370	,,	Rabindranath	Presidency College.
	,,	Rajaninath*	Victoria College, Cooch Behar.
	Ray	Rajkumar	General Assembly's Institution.
	,,	Samankajihan	Presidency College.
	,,	Sudhansubhushan	T. N. Jubilee College, Bhagalpur.
	Raychaudhuri,	Anantakumar	Free Church of Scotland Institution and Duff College.
	,,	Manoranjan	Presidency College.
	,,	Mrityunjay	City College.
	,,	Sitaprasad	Presidency College.
	,,	Surendranath*	Ripon College.
380	Rayghatak,	Rasikchandra	Dacca College.
	Raza	Karim	B. N. College, Bankipore.
	Saha,	Jatindramohan	Rajshahi College.
	,,	Krishnagopal	Teacher, Roll Cal. T. No. 11.
	,,	Mukundalal	Dacca College.
	,,	Radharaman*	Victoria College, Cooch Behar.
	Samaddar,	Jatindranath*	Presidency College.
	,,	Krishnachandra	Ditto.
	Samajpati,	Nibaranchandra	Braja Mohan Institution.
	Samanta,	Bhikanchandra	General Assembly's Institution.
390	,,	Ramprasanna	Ditto.
	Sanyal,	Adityakumar	Ripon College.
	,,	Jagadiswar*	Hooghly College.
	,,	Nalinimohan	General Assembly's Institution.
	Sarbadhikari,	Arunprasad	Bangabasi College.
	Sarkar,	Abinaschandra	Victoria College, Cooch Behar.
	,,	Birendrachandra*	Dacca College.
	,,	Jaminikanta	General Assembly's Institution.
	,,	Nalininath*	Presidency College.
	,,	Praphullakumar*	Metropolitan Institution.
400	Sarma,	Brajadayal	Teacher, Roll Bau. T No. 3.
	Sen,	Bijayananda	Ripon College.
	,,	Biswanath	General Assembly's Institution.
	,,	Debendranath*	Free Church of Scotland Institution and Duff College.
	,,	Dineschandra	Ripon College.
	,,	Guneschandra	General Assembly's Institution.
	,,	Jaminiranjan	Presidency College.
	,,	Jitendranath	General Assembly's Institution.
	,,	Kumudchandra	Dacca College.
	,,	Nagendralal*	Ditto.
	,,	Nagendranath	Presidency College.
410	,,	Narendrakrishna	Ditto.
	,,	Nilambubhushan	Ditto.
	,,	Rameschandra	Metropolitan Institution.
	,,	Saradaranjan	Braja Mohan Institution.
	,,	Satischaran†	Bangabasi College.
	,,	Satyadas	Teacher, Roll Dac. T. 3.
	,,	Satyendramohan	Dacca College.
	,,	Siteschandra*	Presidency College.
	,,	Surendranath	City College.
420	,,	Sureschandra	Braja Mohan Institution, Barisal.
	,,	Tarakchandra	Ditto.
	,,	Upendranath	City College.
	Sengupta,	Hidhubhushan	Ditto.
	,,	Bijaysankar	Bangabasi College.
	,,	Ganeschandra	Dacca College.
	,,	Hiralal	Victoria College, Cooch Behar.
	,,	Ramanikanta*	Brajamohan Institution, Barisal.
	Shaikh	Imam Ali	Ripon College.
	Shreedhar	Chintaman Joshi	Morris College.
430	Sikdar,	Jyotishchandra	Ripon College.
	Sil,	Saurindranath	Presidency College.
	Sinha,	Rasantlcharan	Hooghly College.
	,,	Charuchandra	T. N. Jubilee College, Bhagalpur.
	,,	Hariharprasad*	Presidency College.
	,,	Jogendranath*	Duff College.
	,,	Lakshmi Narayan	B. H. College, Muzaffarpur.
	,,	Mathuraprasad	B. N. College, Bankipore.
	,,	Mohit Narayan	Teacher, Roll Pat. T. No. 1.
	,,	Syamanarain	Patna College.
440	Som,	Bhupendrakumar	Dacca College.
	,,	Rajendranath*	Presidency College.
	S.	Raja Manikkam	Rangoon College.
	S. S.	Athar Hosain	B. S. College, Muzaffarpur.
	S. S.	Kanapathippillai	Teacher, Roll Jaf. T. 1.
	Syed	Abu Mohamed	B. N. College, Bankipore.
	Syed	Mahbubar Rahman	Dacca College.
	Syed	Wasiq Ali	Ravenshaw College, Cuttack.
	Trimbak	Madhao Ghirniker	Hislop College, Nagpur.
	Tripathi,	Jagannath§	Ravenshaw College.
450	Vasudeo	Ramakrishna Shintre	Holkar College, Indore.
	Vinayak	Bhagvant Kaveshvar	Ditto.
	Vinayak	Damodar Kolte	Morris College, Nagpur.
453	Yashvant	Ganesh Rajhumwale	Hislop College, Nagpur.

* Passed in original composition in Bengal.
† ,, ,, ,, ,, Urdu.
‡ ,, ,, ,, ,, Hindi.
§ ,, ,, ,, ,, Uriya.

K. C. BANURJI,
Registrar.

SENATE HOUSE,
The 29th May 1905.

NOTICE.

COMMERCIAL CLASSES IN THE PRESIDENCY COLLEGE.

DAY classes in the following subjects will be opened in the College on the 27th June 1905:—

1. English (modern), especially English correspondence, including Commercial correspondence, letter-drafting and précis-writing.
2. Arithmetic, including Commercial and Mental Arithmetic.
3. Book-keeping, Short-hand and Type-writing.
4. Commercial History and Geography.
5. Bengali, especially Commercial correspondence, letter-writing, précis-writing and translation.

All will be admitted to the Day classes who have passed the School Final or the Entrance Examination or who are able to satisfy the Education Department by passing a simple preliminary test examination.

There is no age limit.

The fee for the Day classes is Rs. 3 a month.

P. K. RAY,

Offg. Principal, Presidency College.

PRESIDENCY COLLEGE, CALCUTTA, *the 8th March 1905.*

NOTICE.

EVENING classes in the following subjects will be opened in the College on the 27th June next:—

1. Banking and Currency.
2. Commercial and Industrial Law.
3. Book-keeping.
4. Short-hand.
5. Type-writing.

Candidates who have attended the lectures in the day course will be eligible for admission to the Evening course, but others will be admitted if they satisfy the Education Department by passing a simple preliminary test examination.

There is no age limit.

The fee is Rs. 3 for each series of fifteen lectures in the evening course on—

1. Banking and Currency; and
2. Commercial and Industrial Law;

and Rs. 10 for each course of lectures on—

1. Book-keeping.
2. Short-hand; and
3. Type-writing.

P. K. RAY,

Offg. Principal, Presy. College.

PRESY. COLLEGE, CALCUTTA, *the 15th May 1905.*

BIHAR SCHOOL OF ENGINEERING.

Prospectus for Admission.

THIS School is under the management of the Principal of the Patna College, assisted by a Board of Visitors. It owes its origin to a fund raised by residents of Bihar to commemorate the visit to India of His Royal Highness the Prince of Wales. The object of the fund was the promotion of technical instruction in Bihar. The School was formally opened on the 11th July 1896 by His Honour the Lieutenant-Governor of Bengal.

2. The number of students admitted to the first-year class of each year will be limited to 60, of whom only 15 can be other than Biharis by race (viz., natives of the United Provinces, Central Provinces or Bengalis); but should the number of suitable applicants who are Biharis by race be insufficient to fill up the 45 vacancies, then the vacancies thus occurring can be given to those applicants who are natives of the United Provinces, Central Provinces, or Bengalis domiciled in Bihar or non-domiciled Bengalis.

As far as accommodation is available, students who have passed the final *B* class examination will be admitted to the second-year class, provided they are not over 21 years of age, preference, again, being given to Biharis and domiciled Bengalis.

3. The School, as at present constituted, is chiefly engaged in training students for appointment as Sub-Overseers and Overseers.

The curriculum includes—

(1) A sound study of Elementary Mathematics.
(2) Careful training in Survey work.
(3) Drawing, both Free-hand and Engineering.
(4) Elements of road-making and the construction of simple buildings.
(5) Workshop practice, with hand tools and with machinery.

Students are prepared for the Overseer certificate of the Public Works Department The necessary additional buildings have now been completed; and Government has agreed to reserve one appointment annually for a qualified student from this School, who must be a Bihari by race.

4. The next session will commence on 3rd July 1905.

5. In the Overseer Department, which corresponds to the Apprentice Department of the Shibpur College, the monthly fee is Re. 1-8, except for non-domiciled Bengalis, who shall pay Rs. 3. All scholarship-holders, however, receive free tuition. Government scholarships of the value of Rs. 7 a month, tenable for one year, are awarded each year on the results of the annual examinations, *eight* being tenable in the second-year class, *six* in the third-year class, and *six* in the fourth-year class. Of the scholarships attached to the School, 75 per cent. of them are to be reserved for those students who are Biharis by race. The teaching is in English.

6. Candidates for admission to the Overseer Department must be under 20 years of age, and must have passed one of the tests mentioned below:—

(1) The Entrance examination of an Indian University in English and Mathematics.
(2) Standard VII of the Code of European Schools.
(3) Students who have not passed either of those tests, and who are otherwise eligible, will have to pass an examination in English and Mathematics (of about the same standard as the Entrance examination of the Calcutta University in those subjects) to be held by the Principal of the Patna College on the 5th and 6th July, respectively (from 6 A.M. to 9 A.M. each day).

7.—Candidates for admission must apply to the Principal not later than the 30th June. Their application must give the following particulars:—

(*a*) Name, address, and occupation of father or guardian.
(*b*) Race and religion, and *evidence to show that he is either a Bihari or a native of the United Provinces or Central Provinces or a domiciled Bengali or a non-domiciled Bengali.*
(*c*) A certificate of good moral character.
(*d*) An attested certificate of age (showing that he is under 20 years of age).
(*e*) A medical certificate showing him to be fit for employment in the public service.
(*f*) A certificate of having passed either of the first two of the three tests mentioned above, failing which the application will be kept pending till a certificate showing that the candidate has passed the third test is given to the Principal.

8. There is also an Amin class, admission to which may be obtained by students who do not know English. In the Amin class the course of study is for one year, and the monthly fee is Re. 1. An Amin student is taught Elementary Surveying with a corresponding amount of Mathematics and of Geometrical Drawing. He will not be admitted to the Workshop. A student in the first-year class of the Overseer Department who fails to pass the examination for promotion to the second-year class, but who has shown an adequate knowledge of Elementary Surveying and the other subjects taught in the Amin class may, at his option, leave the School with an Amin certificate.

Candidates for Amin class who have not passed the Middle English or Middle Vernacular examination will be examined at the School on the 7th July; candidates failing at this examination will not be admitted.

9. Except in very special cases, a student will not be admitted to the Amin class for the session that commences from 3rd July 1905, unless application for admission is made before 30th June 1905.

10. Every candidate for admission to the School must bring a certificate of good character from the Head of the institution from which he has come.

11. All candidates for admission to the School should present themselves personally at the School on the 3rd July.

BANKIPORE,
The 14th February 1905.

H. R. JAMES,
Offg. Principal, Patna College.

NOTE.—There is a hostel in connection with the School which will be opened in July 1905.

Yearly Examination of Candidates for fourth grade of Accountants.

THE yearly examination of candidates for fourth grade of Accountants, Public Works Department, will be held at the Civil Engineering College, Sibpur, on Monday and Tuesday, the 3rd and 4th July 1905, at 10-30 A.M., both days :—

SUBJECTS.	Full marks.	Minimum pass marks.
Writing (neatness, clearness, and rapidity) ...	100	50
Dictation (spelling, punctuation, etc.)	100	50
Arithmetic (the whole)	240	160
Mensuration (*a*) the whole	60	30
Book-keeping (*b*) mercantile	100	50
Total ...	600	

Minimum required in all papers collectively, 400.

(*a*) Todhunter's Mensuration for Beginners.
(*b*) "Book-keeping," by Ball and Hamilton.
"Book-keeping," by double and single entry, by W. Inglis (Chambers' Educational Course).

1. The examination is held annually at the Civil Engineering College, Sibpur, on the 1st Monday in July. The examination will be conducted either at the College, or by an Examiner, Public Works Accounts (including Railway and Telegraph), in Bengal, Assam, and Burma only. The examination will be *ipso facto* vitiated, if it be not held (begun and completed) on the dates fixed; but the officer who will conduct the examination may make his own arrangements, in regard to the *place* and *hour* of examination, with the candidates.

Candidates will not be examined in any of the Calcutta offices.

A candidate already in permanent Government employ* may be allowed to compete in the examination, even if he is more than 25 years of age, and may be appointed to an accountantship if he passes it; but if he is not already in pensionable service, he will be eligible only for appointment to the non-pensionable establishment on State Railways.

* This term includes employment under Local Boards and foreign bodies, if such is pensionable by the British Government.

2. The candidate should apply to an Examiner of Public Works Accounts, not later than 30 days previous to the date fixed for the examination, and obtain his consent to conduct the examination, if examination at the College is not convenient. The application must bear the address of the candidate, must be accompanied by a fee of Rs. 10 and the following certificates, and must be forwarded by him, not direct to the Principal, but through the Examiner

Certificates may be submitted in original, or true copies attested by an officer of the Engineer or Accounts Branch, but none will be returned :—

(1) Certificate of good character signed by applicant's immediate official superior, or by the instructor under whom he has been educated, or by some other superior, under whom he may have been brought up or employed, or to whom he may be well known. (This certificate must have special reference to the two years immediately preceding the application.)

(2) Certificate of age (baptismal or of birth) not required, if the candidate is already in permanent Government employ.

(3) Certificate that the application is in the candidate's handwriting.

NOTE.—A candidate already in Government service should, in like manner, submit his application, through his immediate official superior, to an Examiner of Accounts qualified to hold the particular examination, and should state whether he desires to be examined at the office of the Examiner of Accounts concerned or at the College.

It will rest with the Examiner of Accounts, to whom the candidate submits his application, to decide, on a consideration of the certificates submitted, whether the candidate should be allowed to appear for the examination or whether his application should be rejected. The Examiner of Accounts will then forward to the Principal, for registration, the names of the accepted candidates. The names of these candidates should be entered in a statement showing their ages and their addresses, and also showing where each candidate is to be examined, whether at the College or at the office of the Examiner of Accounts. This statement, together with the fees, should be transmitted to the Principal not later than 15 days after the dates fixed in paragraph 2 for the submission of applications of candidates.

3. Examination papers that are issued for examination need not be returned.

4. Each examination is complete in itself. A candidate who has failed in an examination, and presents himself for examination on a subsequent occasion, must undergo the full examination and furnish fresh fee and certificates.

5. If from any cause a candidate fails to appear for the examination, the fee paid will not be refunded.

6. Passed candidates should apply, not to the Principal of the College, nor to the Accountant-General, Public Works Department, but direct to the Examiner of Public Works Accounts, in the province or railway under whom they may desire to be employed.

7. It must be distinctly understood that the passing of this examination does not give any claim to an appointment, and that in making appointments preference will be given to qualified persons who are already employed in the Department.

8. The Civil Engineering College acts solely as an examination body in reference to admission to the fourth grade of Accountants, Public Works Department.

9. Candidates for the fourth grade Accountantship examination, who are not Government servants and over 25 years of age, are allowed to appear at the examination, at the Sibpur College centre only, but, even if successful, they are debarred from employment in the service of Government, and their names will be excluded from the list of passed candidates which is furnished to the Accountant-General, Public Works Department.

10. Candidates over 25 years of age should apply in writing to the Principal of the Civil Engineering College, not later than 30 days previous to the examination; the application to be accompanied by the fee of Rs. 10.

SIBPUR, *The 5th May 1905.*

A. MACDONELL, *Offg. Principal, Civil Engineering College.*

NOTIFICATIONS OF THE BOARD OF REVENUE.

No. 3593½B. 4th / 7th

NOTICE is hereby given that the Seventh Sale of Opium, the Provision of 1902-1903, will be held at the Government Opium Sale-room, No. 2 Bankshall Street, on Tuesday, the 4th July 1905, at 11 A.M., and will comprise 4,000 chests, viz.—

		Chests.
Opium manufactured at the Patna Factory, consisting of	...	2,000
Ditto at the Ghazipur Factory, consisting of	...	2,000
Total	...	4,000

2nd.—The general conditions of the sale now advertised will be the same as usual. They may be ascertained by reference to the notification issued on the 22nd November 1904 and published in the *Government* and *Exchange Gazettes*, or on personal application at the office of the Board of Revenue.

3rd.—The latest dates for deposit and clearance will be the 10th and 19th July 1905, respectively, that is to say, no Bank of Bengal Receipts, Government Promissory Notes or other Public Securities that may be tendered for deposit in redemption of Promissory Notes given by purchasers in the sale-room will be received after 3-30 P.M. of Monday, the 10th July 1905, and no Bank of Bengal Receipts in full payment of lots will be accepted after 3-30 P.M. of Wednesday, the 19th July 1905.

4th.—In addition to the quantity above advertised for sale, the following quantities, more or less, of the opium manufactured at the Patna and Ghazipur Factories will be brought to sale between the sale now advertised and December next on or about the dates specified below. The Board of Revenue, however, reserve to themselves the right of altering these dates, should circumstances render it expedient to do so:—

DATES.	Manufactured at the Patna Factory; about chests.	Manufactured at the Ghazipur Factory; about chests.	Total; about chests.
On or about Tuesday, 1st August 1905 ...	2,000	2,000	4,000
On or about Tuesday, 5th September „ ...	2,000	2,000	4,000
On or about Tuesday, 26th September „ ...	2,000	2,000	4,000
On or about Wednesday, 1st November „ ...	2,000	2,000	4,000
On or about Tuesday, 5th December „ ...	2,000	2,000	4,000
Total ...	10,000	10,000	20,000

By order of the Board of Revenue, L. P.,

H. F. SAMMAN, *Offg. Secretary.*

BOARD OF REVENUE, L. P., CALCUTTA, *the 27th May 1905.*

No. 3122B.

NOTICE is hereby given that the Sixth Sale of Opium, the Provision of 1902-03, will be held at the Government Opium Sale-room, No. 2 Bankshall Street, on Tuesday, the 6th June 1905, at 11 A.M., and will comprise 4,000 chests, viz.—

		Chests.
Opium manufactured at the Patna Factory, consisting of	...	2,000
Ditto at the Ghazipur Factory, consisting of	...	2,000
Total	...	4,000

2nd.—The general conditions of the sale now advertised will be the same as usual. They may be ascertained by reference to the notification issued on the 22nd November 1904, and published in the *Government* and *Exchange Gazettes*, or on personal application at the Office of the Board of Revenue.

3rd.—The latest dates for deposit and clearance will be the 13th and 21st June 1905, respectively, that is to say, no Bank of Bengal Receipts, Government Promissory Notes, or other public securities that may be tendered for deposit in redemption of Promissory Notes given by purchasers in the sale-room will be received after 3-30 P.M. of Tuesday, the 13th June 1905, and no Bank of Bengal Receipts in full payment of lots will be accepted after 3-30 P.M. of Wednesday, the 21st June 1905.

4th.—In addition to the quantity above advertised for sale, the following quantities more or less, of the Opium manufactured at the Patna and Ghazipur Factories will be brought to sale between the sale now advertised and December next on or about the dates specified below. The Board of Revenue, however, reserve to themselves the right of altering these dates should circumstances render it expedient to do so:—

DATES.			Manufactured at the Patna Factory; about chests.	Manufactured at the Ghazipur Factory; about chests.	Total; about chests.
On or about Tuesday,	4th July	1905...	2,000	2,000	4,000
On or about Tuesday,	1st August	,, ...	2,000	2,000	4,000
On or about Tuesday,	5th September	,, ...	2,000	2,000	4,000
On or about Tuesday,	26th September	,, ...	2,000	2,000	4,000
On or about Wednesday,	1st November	,, ...	2,000	2,000	4,000
On or about Tuesday,	5th December	,, ...	2,000	2,000	4,000
	Total	...	12,000	12,000	24,000

By order of the Board of Revenue, L. P.,

H. F. SAMMAN, *Offg. Secretary.*

BOARD OF REVENUE, L. P., CALCUTTA, *the 1st May 1905.*

ELECTION OF MUNICIPAL COMMISSIONERS.

NOTIFICATION.

IT is hereby notified for general information that the 17th of July 1905 has been fixed for holding a bye-election for the election of a Commissioner for Ward No. I of the Ranchi Municipality in the place of Babu Rampado Roy, removed.

F. A. SLACKE, *Commr. of the Chota Nagpur Divn.*

COMMR.'S OFFICE, RANCHI, *the 24th May 1905.*

NOTIFICATION.

IT is hereby notified for general information that a bye-election will be held on Saturday, the 22nd July 1905, in Ward No. IV of the Barasat Municipality, in the district of the 24-Parganas, to elect a Commissioner for that ward in the place of Babu Mohendra Nath Singha, resigned.

F. W. DUKE, *Offg. Commissioner.*

COMMR.'S OFFICE, PRESY. DIVN., CALCUTTA, *the 27th May 1905.*

NOTIFICATION.

IT is hereby notified for general information that the 26th June 1905 has been fixed for holding a bye-election for the election of a Commissioner for Ward No. E of the Burdwan Municipality in the place of Babu Bani Nath Banerjee, resigned.

N. L. BAGCHI,
for *Offg. Commissioner of the Burdwan Division.*

COMMR.'S OFFICE, BURDWAN DIVISION, CHINSURA, *the 29th May 1905.*

NOTIFICATION.

IT is hereby notified for general information that, under rule 32 of the rules under clause (9), section 138 of the Bengal Local Self-Government Act, III of 1885, the following dates have been fixed for holding elections of members of Local Boards in the several thanas in the district of Pabna:—

Sadar ...	Pabna ...	...	18th August 1905.
	Chatmohar	...	20th ditto.
	Mathura	...	22nd ditto.
	Dulai ...	...	24th ditto.
Sirajganj ...	Sirajganj	...	21st August 1905.
	Shazadpur	...	24th ditto.
	Ullapara	...	25th ditto.
	Raiganj ...	...	27th ditto.

F. W. WARD, *Magistrate.*

PABNA MAGISTRACY, *the 26th May 1905.*

NOTIFICATION.

IT is hereby notified for general information that, under rule 21 (*b*) of the Manual of Rules for the management of Charitable Hospitals and Dispensaries in Bengal, the following gentlemen are appointed to be members of the Committee for the management of the Charitable Dispensary at Mongalkote, in the district of Burdwan:—

1. The Civil Surgeon of Burdwan ... } *Ex-officio.*
2. The Sub-Registrar of Mongalkote ... } *Ex-officio.*
3. The Sub-Inspector of Police, Mongalkote ... } *Ex-officio.*
4. Maulvi Khondkar Mohomed.
5. „ Kazi Newaz Khoda.
6. „ Mamezl Huq.
7. „ Afsuruddin Hossen.
8. Babu Sita Nath Mullick.
9. „ Khetra Nath Gosswami.
10. „ Upendra Chandra Gangopadhya.

N. L. BAGCHI,
for *Offg. Commissioner.*

BURDWAN COMMR.'S OFFICE, CHINSURA, *the 23rd May 1905.*

NOTIFICATION.

IT is hereby notified for general information that, under rule 21 (*b*) of the Manual of Rules for the management of charitable hospitals and dispensaries in Bengal, the following gentlemen are appointed to be members of the Committee for the management of the Charitable Dispensary at Dhunot, in the district of Bogra:—

1. The Civil Surgeon ... ... } *Ex-officio.*
2. The Sub-Inspector in charge of police-station Dhunot ... } *Ex-officio.*
3. The Naib of Taras Kutchery ... ... } *Ex-officio.*
4. The Naib of Puthia Kutchery, Elongi ... ... } *Ex-officio.*
5. The Naib of Dilpasha Kutchery ... ... } *Ex-officio.*
6. The Postmaster, Dhunot ... ... } *Ex-officio.*
7. Babu Ambica Laul Sircar.
8. Munshi Akbaruddin Mondal.
9. The Head Master, Dhunot M. E. School ... ... } *Ex-officio.*
10. The Head Master, Elongi School ... ... } *Ex-officio.*
11. The Head Pandit, Elongi School ... ... } *Ex-officio.*

C. R. MARINDIN, *Commissioner.*

COMMR.'S OFFICE, RAJSHAHI DIVN., *dated Darjeeling, the 24th May 1905.*

NOTIFICATION.

IT is hereby notified for general information that, under rule 21 (*b*) of the Manual of Rules for the management of charitable hospitals and dispensaries in Bengal, the following gentlemen are appointed to be members of the Committee for the management of the Charitable Dispensary at Shitlai, in the district of Pabna:—

1. Babu Banamali Bhattacharjee.
2. „ Barada Kanta Chukkerburtty.
3. Babu Sambhu Nath Chanda.
4. „ Monmotha Nath Adhikari

C. R. MARINDIN, *Commissioner.*

COMMR.'S OFFICE, RAJSHAHI DIVN., *dated Darjeeling, the 24th May 1905.*

NOTIFICATION.

IT is hereby notified for general information that, under rule 21 (*b*) of the Rules for the management of Charitable Hospitals and Dispensaries in Bengal, the following gentlemen have been appointed to be members of the Committee for the management of the charitable dispensary at Sewan, in the district of Saran:—

1. Babu Sita Ram.
2. „ Ambica Charan Chatterji.
3. Pandit Mahadeo Dutt Sukul.
4. Babu Ram Khelawan Lal.
5. Shaikh Mahboob
6. Subdivisional Officer, Sewan, *ex-officio.*
7. Civil Surgeon of Saran, ditto.

C. R. MARRIOTT, *Additional Commissioner.*

PATNA COMMR.'S OFFICE, BANKIPORE, *the 25th May 1905.*

NOTIFICATION.

IT is hereby notified for general information that under Rule 21 (*b*) of the Manual of Rules for the management of Charitable Hospitals and Dispensaries in Bengal, the following gentlemen are appointed to be members of the Committee for the management of the Charitable Dispensary at Khandaghose, in the district of Burdwan:—

1. The Civil Surgeon, Burdwan ... ...
2. The Sub-Inspector of Police, Khandaghose ... } *Ex-officio.*
3. The Head Master, Khandaghose M. E. School ...
4. Babu Jiban Krisna Chatterjee.
5. Chowdhari Afzal Rabbi.
6. Babu Monmohan Ghosh.
7. „ Kisori Mohan Mukerjee.
8. „ Chandi Charan Chatterjee.
9. „ Gopal Chandra Sarkar.
10. „ Beni Madhab Chatterjee.
11. „ Sridhar Chandra Ghosh.
12. „ Sarada Prosad Mitra.
13. „ Khetra Mohan Ghosh.
14. „ Hari Narayan Bhattacherjee.
15. „ Jagabandhu Mazumdar.
16. Munshi Merhamutulla.

N. L. BAGCHI, *for Offg. Commissioner.*

COMMR.'S OFFICE, BURDWAN DIVISION, CHINSURA, *the 23rd May 1905.*

NOTIFICATION.

IT is hereby notified for general information that the following gentlemen are appointed to be members of the Committee for the management of the Khesirserai Dispensary, in the district of Gaya:—

1. Sub-Inspector of Police, in charge Khesirserai outpost ... *Ex-officio.*
2. Babu Keshab Panday, Head Master.
3. Maulvi Chand Khan, Zamindar.
4. S. Mohebul Huq, Jafra.
5. Babu Brij Nandan Singh, Mandai.

P. C. LYON, *Offg. Commissioner.*

PATNA COMMR.'S OFFICE, BANKIPUR, *the 26th May 1905.*

The Calcutta Gazette.

WEDNESDAY, MAY 31, 1905.

PART IA.

Orders and Notifications by the Government of India, &c.

[*Reprinted from the "Gazette of India."*]

The following order, issued by the Government of India in the Home Department, is republished for general information.

R. W. CARLYLE,
Offg. Chief Secy. to the Govt. of Bengal.

NOTIFICATIONS.

MEDICAL.

Simla, the 22nd May 1905.

No. 523.—The services of the undermentioned officers are placed temporarily at the disposal of the Government of Bengal:—

Captain A. C. MacGilchrist, M.B., I.M.S.
Captain A. G. McKendrick, M.B., I.M.S.
Captain H. B. Foster, I.M.S.
Lieutenant C. A. Gourlay, M.B., I.M.S.

SANITARY.

PLAGUE.

The 24th May 1905.

No. 522.—Whereas the Governor-General in Council is satisfied that there is a danger of an outbreak of dangerous epidemic disease at Tiruvallur in the Tiruvallur taluk of the Chingleput district of the Madras Presidency if persons from the Mysore State are permitted to assemble at that place on the occasion of the ensuing Ani New Moon and Floating Festival:

In exercise of the power conferred by section 2, sub-section (1), of the Epidemic Diseases Act, 1897 (III of 1897), the Governor-General in Council is pleased to direct that no tickets to travel by railway to the stations of Tinnanur, Sevvapet Road, Tiruvallur, Kadambattur, Manur and Tiruvelangadu on the Madras Railway shall be sold from the 24th June to the 4th July 1905 (both days inclusive) within the Mysore State to any person intending or believed to be intending to proceed to the Ani New Moon and Floating Festival at Tiruvallur.

M. HAMMICK,
Offg. Secy. to the Govt. of India.

The following order, issued by the Government of India in the Foreign Department, is republished for general information.

R. W. CARLYLE,
Offg. Chief Secy. to the Govt. of Bengal.

NOTIFICATION.

Simla, the 26th May 1905.

No. 1107 G.B.—The Governor-General in Council is pleased to recognise the appointment of Khan Bahadur Hadji Mirza Shujaut Ali Beg as Acting Consul-General for Persia at Calcutta, during the absence of Mirza Mahmoud Khan Mofakham-us-Sultan.

S. M. FRASER,
Offg. Secy. to the Govt. of India.

The following order, issued by the Government of India in the Department of Commerce and Industry, is republished for general information.

R. W. CARLYLE,
Offg. Chief Secy. to the Govt. of Bengal.

NOTIFICATION.

CUSTOMS.
SUGAR.

Simla, the 22nd May 1905.

No. 1838 C.—The Governor-General in Council is pleased to direct that refunds shall be made of the difference, as indicated below, between (*a*) the rates of additional duty actually charged, under Finance and Commerce Department Notification No. 5238.R., dated the 1st February 1901, since cancelled by the Notification in this Department, No. 535, dated the 11th March 1905, on the different kinds of Austro-Hungarian sugar imported into India, which were shipped from Austria-Hungary or from ports of other countries from the 1st August 1902 to the 31st August 1903 inclusive, and (*b*) the rates now ascertained to be so chargeable thereon after making allowance for the maximum bounty paid by the Austro-Hungarian Government. Such refunds will be made to the importers concerned, that is to say, to the person by whom the duty was originally paid, on application to the Collector of Customs to whom the duty was paid, evidence that the sugar was exported from Austria-Hungary during the period mentioned above, and evidence regarding the rate and amount of duty paid being furnished to the satisfaction of the Collector :—

Kinds of sugar.	(*a*) Rates of additional duty actually charged.	(*b*) Rates now ascertained to be chargeable.	Difference to be refunded.
	Per cwt.	Per cwt.	Per cwt.
	Rs. A. P.	Rs. A. P.	A. P.
Sugar under 99·3 per cent. and of at least 90 per cent polarisation.	1 0 3	0 12 1	4 2
Sugar of at least 99·3 per cent. polarisation ...	1 7 4	1 1 4	6 0

W. L. HARVEY,
Secy. to the Govt. of India.

The Calcutta Gazette.

WEDNESDAY, MAY 31, 1905.

PART IB.

ORDERS BY THE LIEUT.-GOVERNOR OF BENGAL.

MUNICIPAL AND LOCAL.

NOTIFICATIONS.

No. 681T.M.—The 20th May 1905.—It is hereby notified that the Lieutenant-Governor is pleased to approve the election by the members of the Diamond Harbour Local Board, in the district of 24-Parganas, under section 25 of the Bengal Local Self-Government Act, III of 1885, of Babu Upendra Nath Bose to be their Chairman.

24-Parganas.

No. 683T.—M.—The 24th May 1905.—It is hereby notified that, under section 11 of the Bengal Local Self-Government Act, III of 1885, the Lieutenant-Governor is pleased to appoint the following gentlemen to be members of the Kalna Local Board in the district of Burdwan :—

Burdwan.

Babu Ram Hridoy Seal. | Babu Upendra Lal Hazra.
Chaudhuri Abdul Rajak.

2. The Lieutenant-Governor is also pleased to appoint the following gentlemen, under section 10 of the Act, to be members of the Board :—

Babu Kali Pado Nandi Chaudhuri. | Babu Utanka Lal Mukerjee.
„ Aghore Nath Jas. | „ Banwari Lal Biswas.

No. 686T.M.—The 23rd May 1905.—It is hereby notified that, under section 27 of the Bengal Municipal Act III of 1884, the Lieutenant-Governor is pleased to appoint Mr. D. Henderson to be a Commissioner of the Budge-Budge Municipality, in the district of the 24-Parganas, *vice* Mr. A. E. Pyster, resigned.

24-Parganas.

No. 696T.M.—The 24th May 1905.—It is hereby notified for general information that, under section 1 of Act IV (B. C.) of 1871 (the Puri Lodging-House Act), as amended by Bengal Acts II of 1879 and I of 1884, the Lieutenant-Governor vests Babu Chuni Lal Roy, Deputy Magistrate in the district of Nadia, with the powers of a Magistrate under the aforesaid Act.

Nadia.

No. 701T.M.—The 23rd May 1905.—It is hereby notified that under section 11 of the Bengal Local Self-Government Act, III of 1885, the Lieutenant-Governor is pleased to appoint the following gentlemen to be members of the Katwa Local Board, in the district of Burdwan:—

Burdwan.

Babu Gobinda Madhab Mallick. | Babu Ban Behari Chandra.
Khondkar Maulvi Mahammad.

2. The Lieutenant-Governor is also pleased to appoint the following gentlemen, under section 10 of the Act, to be members of the Board:—

Babu Radha Ballav Roy. | Babu Atindra Nath Banerjee.

No. 709T.M.—The 23rd May 1905.—Whereas a notification No. 1211M., dated the 6th March 1905, was published at page 44, Part IB of the *Calcutta Gazette* of the 8th March 1905, declaring the intention of the Lieutenant-Governor to extend the provisions of section 241 of the Bengal Municipal Act, III of 1884, to the portion of the Azimganj Municipality, in the district of Murshidabad, the boundaries of which are given below, and whereas no objection has been raised to the proposal within one month from the date of the publication of the above notification within the said portion of the Municipality, it is hereby notified for general information that in the exercise of the power vested in the Local Government by section 221 of the Act, and in accordance with the recommendation of the Commissioners of the Azimganj Municipality, made at a meeting, the Lieutenant-Governor sanctions the extension of the above provisions of the Municipal Act to the said portion of the Municipality:—

Murshidabad.

On the south.—Bhelladanga kutcha road from the point where it meets the Katra pucca road till it joins the Gossaibazar pucca road.

On the west.—A line drawn from the point of the southern extremity and running northward till it joins the Bhagwangola pucca road.

On the north.—A line drawn from the point of the western extremity and running eastward till it joins the Katra pucca road.

On the east.—A line drawn from the point of the northern extremity and running southward till it joins the Bhelladanga kutcha road.

No. 716T.M.—The 24th May 1905.—It is hereby notified that under section 11 of the Bengal Local Self-Government Act, III of 1885, the Lieutenant-Governor is pleased to appoint the following gentlemen to be members of the Raniganj Local Board, in the district of Burdwan:—

Burdwan.

Mr A. C. Hills. | Mr. F. J. Agabeg.
Mr. R. Mitchell.

2. The Lieutenant-Governor is also pleased to appoint the following gentlemen, under section 10 of the Act, to be members of the Board:—

Babu Radharaman Ghose, M B. | Babu Mritunjoy Chatterjee.

No. 737T.M.—The 25th May 1905.—It is hereby notified that, under section 19 of the Bengal Local Self-Government Act, III of 1885, Babu Jwala Prosad has been elected by the members of the Arrah Local Board, in the district of Shahabad, to be a member of the Shahabad District Board, *vice* Babu Durga Prosad, deceased.

Shahabad.

No. 742T.M.—The 25th May 1905.—It is hereby notified that, under section 19 of the Bengal Local Self-Government Act, III of 1885, the Lieutenant-Governor is pleased to appoint Mr. C. Still, C.I.E., to be a member of the District Board of Champaran, *vice* Mr. J. R. Lowis, resigned.

Champaran.

No. 753T.M.—The 27th May 1905.—It is hereby notified for general information that, in accordance with the recommendation of the Commissioners of the Garden Reach Municipality, in the district of the 24-Parganas, made at a meeting, the Lieutenant-Governor intends, in exercise of the power vested in the Local Government by section 9 (*b*) of the Bengal Municipal Act, III of 1884, to revise the boundaries of the said Municipality so as to include within the limits of the Garden Reach Municipality the local area contiguous to it, the boundaries of which are defined below, unless good reasons are shown to the contrary within six weeks from the date of publication of this notification within the Municipality.

24-Parganas.

Boundaries of the area to be included—

On the North and West.—From the point where the north-east corner of the boundary of the Nadial village meets the southern bank of the River Hooghly west and southward along the south and east banks of the River Hooghly till it meets the Government embankment.

On the South.—Thence eastward along the northern boundary of the Government embankment on the north of the Akra village till it meets the northern boundary of the village Kismat Dum-Dum.

On the East.—Thence northward along the eastern boundary of villages Kadumpur, Kismat Satghara, and Nadial till it meets the southern bank of the River Hooghly.

The revised boundary of the Garden Reach Municipality after the inclusion of the area defined above will be as follows:—

On the North.—The southern bank of the River Hooghly till it meets the Neemuk Mahal Ghat road.

On the East.—Thence southward along the western edge of the Neemuk Mahal Ghat road crossing the Circular Garden Reach road and continuing south-easterly along the western edge of the Taratola road till it meets the point opposite the junction of the Taratola road and Sonai 3rd lane.

On the South.—Thence westward along the northern border of villages Daulatpur, Krishnapur, Gongooa, Belpookaria, Ramdashutty, Makal Hutty, and Kismat Dum-Dum till it meets the Government embankment; thence west along the Government embankment till it meets the River Hooghly.

On the West.—The River Hooghly.

Noakhali. *No. 760T.M.—The 26th May 1905.*—Whereas a Notification No. 549M., dated the 30th January 1905, was published at page 25, Part IB of the *Calcutta Gazette* of the 1st February declaring the intention of the Lieutenant-Governor to sanction the imposition by the Commissioners of the Noakhali Municipality in the district of Noakhali of a rate on the annual value of holdings within the Municipality in lieu of the tax on persons occupying holdings within the Municipality, and whereas no valid objection has been raised to the proposal within one month from the date of the publication of the above notification within the Municipality, it is hereby notified for general information that, in the exercise of the power vested in the Local Government by section 85 of the Act, and in accordance with the recommendation of the Commissioners of the Noakhali Municipality, made at a meeting, the Lieutenant-Governor sanctions, with effect from the 1st April 1906, the imposition of the said rate within the above Municipality in lieu of the tax upon persons occupying holdings within the Municipality at present in force in that Municipality.

Murshidabad. *No. 796T.M.—The 27th May 1905.*—It is hereby notified that the ratepayers of Ward No. I of the Azimganj Municipality, in the district of Murshidabad, having failed to elect a Commissioner, the Lieutenant-Governor is pleased, under sections 16 and 27 of the Bengal Municipal Act, III of 1884, to appoint Babu Chuni Lal Bothra to be a Commissioner of the said Municipality, *vice* Babu Rakhal Chand Dugar, resigned.

Bankura. *No. 805T.M.—The 29th May 1905.*—It is hereby notified that the Lieutenant-Governor is pleased to approve the election by the members of the Vishnupur Local Board, in the district of Bankura, under section 25 of the Bengal Local Self-Government Act, III of 1885, of Babu Umesh Chandra Choudhury to be their Chairmen.

Jessore. *No. 807T.M.—The 29th May 1905.*—It is hereby notified that, under sections 10 and 19 of the Bengal Local Self-Government Act, III of 1885, the Lieutenant-Governor is pleased to appoint Meer Surat Jan to be a member of the Sadar Local Board, in the district of Jessore, *vice* Babu Mrinal Kantil Ghosh, resigned.

Bankura. *No. 809T.M.—The 29th May 1905.*—It is hereby notified that the Lieutenant-Governor is pleased to approve the election by the members of the Sadar Local Board, in the district of Bankura, under section 25 of the Benga Local Self-Government Act, III of 1885, of Babu Basanta Kumar Neogi to be their Chairman.

Bankura. *No. 811T.M.—The 29th May 1905.*—It is hereby notified that, under section 7 of the Bengal Local Self-Government Act, III of 1885, the following gentlemen have been elected to be members of the District Board of Bankura :—

Local Boards by which elected.		Names of members.
Bankura	...	Babu Binode Behari Mandal.
		,, Basanta Kumar Neogy.
		,, Bama Charan Roy.
		,, Paran Chandra Pal
Vishnupur	...	,, Umesh Chandra Chaudhuri.
		,, Hrishi Kesh Mandal.
		,, Balindra Sinha Deb.

The following gentlemen are appointed under section 7 of the Act to be members of the Board :—

The Civil Surgeon of Bankura ... ...
The Deputy Inspector of Schools ... ... } *Ex-officio.*
The Subdivisional Officer of Vishnupur ... ...
Mr. W. C. Lydiard.
Babu Kuloda Prasad Mukerjee.
Revd. F. W. A. Smith.
Chaudhuri Mahammed Muzaharul Ali.

E. A. GAIT,
Offg. Secy. to the Govt. of Bengal.

The Calcutta Gazette.

WEDNESDAY, MAY 31, 1905.

PART II.

Advertisements.

[N. B.—Advertisements, Notices, &c., intended for insertion in this part of the Gazette cannot be received after Noon on Monday.]

LAND SALE NOTICES.

Notification A.

NOTICE is hereby given under sections 6 and 13, Act XI of 1859, that the undermentioned estates and shares of estates in the district of Noakhali will be put up for sale at the office of the Collector of that district on the 14th June 1905 at 1 P.M. for arrears of revenue and other demands, which by law are realisable as arrears of land revenue.

When in columns 5, 7 and 9 of the appended statement it is stated that only a share is to be sold, it is to be understood that a separate account is kept for that share.

Touzi No.	Name of mahal and pargana.	Sadar jama of the whole estate.	Whether the whole estate is to be sold.	If only a share is to be sold, specification of such share or shares.	Names of proprietors of property to be sold.	If only a share is to be sold, the sadar jama of such share.	If the whole estate is to be sold, the arrears due from it.	If only a share is to be sold, the arrears due from it.
1	2	3	4	5	6	7	8	9
	Elahabad, pargana Elahabad.	.....	Share ...	Residuary share 8 annas ...	..	Rs. A. P. 853 8 4	.....	Rs. A. P. Land Revenue - 309 11 5 Road Cess— 429 8 6 739 3 1

Noakhali, the 3rd May 1905.

B. C. SEN, Collector.

Notification A.

NOTICE is hereby given, under sections 6 and 13, Act XI of 1859, that the undermentioned estates and shares of estates in the district of Tippera will be put up for sale at the office of the Collector of that district on the 27th June 1905 at 12 o'clock for arrears of revenue and other demands which by law are realisable as arrears of land revenue.

When in columns 5, 7 and 9 of the appended statement it is stated that only a share is to be sold, it is to be understood that a separate account is kept for that share.

Tauzi No.	Name of mahal and pargana.	Sadar jama of whole estate.	Whether the whole estate is to be sold.	If only a share is to be sold, specification of such share or shares.	Names of proprietors of property to be sold.	If only a share is to be sold, the sadar jama of such share.	If the whole estate is to be sold, the arrears due from it.	If only a share is to be sold, the arrears due from it.
1	2	3	4	5	6	7	8	9
		Rs. A. P.					Rs. A. P.	
1983/8	Pargana Bardakhat Balukandi Joar.	2,555 13 3	Whole ...	.....	Dwaraka Nath Barman and others.	.....	638 15 3	.....
1983/50	Pargana Bardakhat Joar Shingula.	1,380 3 1	Do. ...	.....	Purna Chandra Chakraberty and others.	.....	373 11 1	.....
1983/51	Pargana Bardakhat Tinchitta Joar.	940 3 9	Do. ...	.....	Tarini Charan Bordhon and others.	.....	198 14 2	.....

Comilla, the 15th May 1905. H. W. SCHOOPE, Collector.

Notification A.

NOTICE is hereby given, under sections 6 and 13, Act XI of 1859, that the undermentioned estates and shares of estates in the district of Mymensingh will be put up for sale at the office of the Collector of that district on the 23rd June 1905 at 12 o'clock noon for arrears of revenue and other demands, which by law are realisable as arrears of land revenue.

When in columns 5, 7 and 9 of the appended statement it is stated that only a share is to be sold, it is to be understood that a separate account is kept for that share.

Tauzi No.	Name of mahal and pargana.	Sadar jama of whole estate.	Whether the whole estate is to be sold.	If only a share is to be sold, specification of such share or shares.	Names of proprietors of property to be sold.	If only a share is to be sold, the sadar jama of such share.	If the whole estate is to be sold, the arrears due from it.	If only a share is to be sold, the arrears due from it.
1	2	3	4	5	6	7	8	9
		Rs.		*Second-class estates.*			Rs. A. P.	
6178	Joyarchatal, pargana Baradakhat.	586	Whole ...	.....	Kali Sundari Dassya and others.	.....	9 9 3	.....
8580	Char Iswardia, pargana Mymensingh.	522	Do. ...	.....	Brojendra Kishore Roy Chaudhury and others.	.....	64 14 9	.....

Mymensingh Collectorate, the 13th May 1905. W. B. THOMSON, Collector.

Notification A.

NOTICE is hereby given, under sections 6 and 13, Act XI of 1859, that the undermentioned estates and shares of estates in the district of Burdwan will be put up for sale at the office of the Collector of that district on the 21st June 1905 at 12 o'clock noon for arrears of revenue for March 1905 kist and other demands, which by law are realizable as arrears of land levenue.

When in columns 5, 7 and 9 of the appended statement it is stated that only a share is to be sold, it is to be understood that a separate account is kept for that share.

Tauzi No.	Name of mahal and pargana.	Sadar jama of whole estate.	Whether the whole estate is to be sold.	If only a share is to be sold, specification of such share or shares.	Names of proprietors of property to be sold.	If only a share is to be sold, the sadar jama of such share.	If the whole estate is to be sold, the arrears due from it.	If only a share is to be sold, the arrears due from it.
1	2	3	4	5	6	7	8	
		Rs. A. P.					Rs. A. P.	
17	Chak Durga, pargana Ranihati.	9,939 2 11	Whole estate is to be sold.	.....	Seyadani Aymana Bibi ...	.....	3,434 0 1	

Burdwan Collectorate, the 16th May 1905. P. H. O'BRIEN, Collector.

Notification A.

NOTICE is hereby given, under sections 6 and 13, Act XI of 1859, that the undermentioned estates and shares of estates in the district of Nadia will be put up for sale at the office of the Collector of that district on the 23rd June at 12 noon, for arrears of revenue and other demands, which by law are realisable as arrears of land revenue.

When in columns 5, 7 and 9 of the appended statement it is stated that only a share is to be sold, it is to be understood that a separate account is kept for that share, and that the other share or shares in the estate are excluded from the sale.

Tauzi No.	Name of mahal and pargana.	Sadar jama of whole estate.	Whether the whole estate is to be sold.	If only a share is to be sold, specification of such share or shares.	Names of proprietors of property to be sold.	If only a share is to be sold, the sadar jama of such share.	If the whole estate is to be sold, the arrears due from it.	If only a share is to be sold, the arrears due from it.
1	2	3	4	5	6	7	8	9
		Rs. A. P.				Rs. A. P.	Rs. A. P.	Rs. A. P.
266	Jagadanandpur, pargana Bagowan.	655 14 11	Whole ...	.....	Jotindra Nath Ray ...	.....	2 10 2	.....
61	Balia, pargana Plassy ...	5,631 0 9	.....	1a. 13g. 1c. 3d. (separate account No. 61-1).	Dub Mohini Dasi and others.	586 9 1	.....	40 10 3
61	Ditto, ditto ...	5,631 0 9	.....	16g. 2c. 6d. (separate account No. 61-4).	Ditto ditto ...	293 4 7	.....	3 7 5
			Total ...	2a. 10g.				
				The other shares, viz., 13a. 10g., will be excluded from the sale.				
313	Gopalpur, pargana Shahanjlal.	2,176 0 5	.....	11a. 15g. 3c. 2kg. (separate account No. 213-0).	Panchanan Mazumdar, self and guardian on behalf of Lalit Mohan Mazumdar.	1,663 4 3	...	1 16 2
				The other share, viz., 4a. 4g. 1c. 2kg., will be excluded from the sale.				
3297	Pakuria, pargana Tarugonia.	777 6 0	.....	5a. 12g. 3c. 14k. (residue) ...	Rama Charan Choudhury.	796 6 4	.....	3 6 2
				The other shares, viz., 10a. 6g. 2kg. 3d., will be excluded from the sale.				
980	Chur Kaipal, pargana Shahanjlal.	1,390 0 0	Whole ...	. .	Monmohan Ray, self and guardian for Kedar Nath Ray.	.....	1 5 5	.....

Nadia Collectorate, the 20th May 1905. R. S. GREENSHIELDS, Collector.

Notification B.

NOTICE is hereby given, under sections 5 and 13, Act XI of 1859, that unless the arrears mentioned below are paid on or before the next latest date of payment, viz., the 28th April 1905, the undermentioned estates or shares of estates in the district of Puri will be put up for sale at the office of the Collector of that district on the 10th July 1905 at 12 o'clock noon for the said arrears.

When in columns 5, 7 and 9 of the appended statement it is stated that only a share is to be sold, it is to be understood that a separate account is kept for that share, and that the other share or shares in the estate not specifically mentioned in column 5 are excluded from the sale.

Tauzi No.	Name of mahal and pargana.	Sadar jama of whole estate.	Whether the whole estate is to be sold.	If only a share is to be sold, specification of such share or shares.	Names of proprietors of property to be sold.	If only a share is to be sold, the sadar jama of such share.	If the whole estate is to be sold, the arrears due from it.	If only a share is to be sold, the arrears due from it.	Nature and amount of demand for which to be sold.
1	2	3	4	5	6	7	8	9	10
		Rs. A. P.		A. P.		Rs. A. P.	Rs. A. P.	Rs. A. P.	
185 2	Killah Rupas, pargana Athais	1,689 0 0	.....	Kismat ... 9 4	Trilochan Chaudhuri and others.	985 5 0	. .	491 11 8	Due for list April 1905.
166 1	Ta. Ganeswarpur, pargana Sanchas.	1,619 0 0	.....	,, ... 9 0	Baladev Prakas Brambachari.	910 11 0	.....	455 0 0	Ditto.
166 2	Ditto ...	1,619 0 0	.....	,, ... 7 0	Chandra Moni Debya, mother and guardian of Hanuman Khentia.	708 5 0	.....	354 0 0	Ditto.
66	Ma. Durgadaspur, pargana Kotrahang.	979 0 0	Whole ...	.....	Raja Mukund Dev	.....	489 0 0	.....	Ditto.
79 6	Ma. Thanthana, pargana Kotrahang.	653 0 0	.....	Kismat ... 13 0	Dinabandhu Pain, brother and guardian of Gopi Nath Pain and others.	530 9 0	.....	264 14 0	Ditto.
347	Ta. Amuri, pargana Purbadasi.	1,316 0 0	.....	,, ... 8 0	Nayanmali Jemadie, mother and guardian of Durga Charan Jagadeb Rai.	608 0 0	.....	304 0 0	Ditto.
347 2	Ditto ...	1,316 0 0	.....	,, ... 8 0	Radha Mohan Rai ...	608 0 0	.....	304 0 0	Ditto.

Puri Collectorate, the 7th April 1905. J. R. BLACKWOOD, Collector.

Notification A.

NOTICE is hereby given, under sections 6 and 13, Act XI of 1859, that the undermentioned estates and shares of estates in the district of Hooghly will be put up for sale at the office of the Collector of that district on the 5th of June 1905, at 12 noon for arrears of revenue and other demands which by law are realisable as arrears of land revenue (25th April 1905).

When in columns 5, 7 and 9 of the appended statement it is stated that only a share is to be sold, it is to be understood that a separate account is kept for that share.

Tauzi No.	Name of mahal and pargana.	Sadar jama of whole estate.	Whether the whole estate is to be sold.	If only a share is to be sold, specification of such share or shares.	Names of proprietors of property to be sold.	If only a share is to be sold, the sadar jama of such share.	If the whole estate is to be sold, the arrears due from it.	If only a share is to be sold, the arrears due from it.
	2	3	4	5	6	7	8	9
144	Sankarpore, pargana Khosalpore.	Rs. A. P. 2,923 5 3	Entire	Nil	Promotho Nath Mullic, Trustee to the estate of Kumar Hari Prosad Ray.	Nil	Rs. A. P. 20 7 4	Nil
160	Gobindopore, pargana Boro.	3,408 5 6	Do. ...	,,	Kedar Nath Kundoo Chowdhuri and others.	,,	11 7 11	,,
156	Biljoypore, pargana Boro.	723 6 9	Do. ...	,,	Kamal Krishna Kundoo Chowdhuri and others.	,,	2 0 5	,,

Hooghly Collectorate, the 25th April 1905. KHAGENDRA NATH MITRA, *for* Collector.

Advertisement of Sale.

NOTICE is hereby given that the proprietary right of Government, to the undermentioned estate, situate in the district of Hooghly, will be sold by public auction subject to the conditions specified below, at the Hooghly Collectorate on 5th June 1905, corresponding to 22nd Jaishtha 1312 B.S.

Conditions of Sale.

1st.—The estate is to be sold to the highest bidder above the upset price, viz., Rs 49-2. The purchaser of this estate will be registered as the proprietor of the estate, and the entire proprietary right of Government will be transferred to him subject to the payment of a revenue fixed in perpetuity of Rs. 24-9, as per schedule given below.

2nd.—The sale is to be subject to existing leases and to the rights conferred by the settlement proceedings and by the laws in force, and purchasers are to be bound to respect the rights of resident cultivators who have signed the schedule of assessment prepared by the revenue authorities.

3rd.—If the amount of purchase-money does not exceed Rs. 100, the whole amount is to be paid down at once.

4th.—If the amount of purchase-money exceeds Rs 100, one-fourth of the amount of bid is to be immediately deposited. If the balance be not paid by the noon of the fifteenth day after the sale, reckoning the day of sale as one, or, if that day be a close holiday, then by the noon of the first succeeding office day, the sale is to be cancelled (the sum deposited being forfeited to Government), and the estate is to be again put up to sale at the risk of the defaulting purchaser, after issue of advertisement, as in the case of original sale.

Number of estate on the district roll.	Name of estate and pargana.	Description of lands comprised in the estate.	Boundaries. North	South.	East.	West.	Approximate area.	Name of tenant.	Rental.	Revenue.	Upset price.
				In mauza Chottodangal.			B. K. CH		Rs. A.	Rs. A.	Rs. A.
4836	Chhotadangal Byrah.	Sali Doem plot No. 1.	Mehir Kundu and Mohendra Kotal.	Siteram Pandit, etc.	Mohendra Kotal, etc.	Naran Pakre, etc.					
		Ditto 2	Jadab Parvi	Nondo Koley	Rasick Kotal	Naran Pakrey					
		Ditto 3	Sarodo Sarui ...	Naran Pakrey	Sarnda Mallik	Babu Baksi ...					
		Ditto 4	Doyal Nandy ...	Rasik Kotal ...	Babu Baksi	Doyal Nandy					
		Sali Soem plot No. 5.	Trilok Faridar's Chakran.	Hori Koley	Dinoo Pesda	Babu Lal Baksi.					
		Ditto 6	Trilok Faridar, etc.	Kirti Bash Porel	Babu Baksi ...	Bajaram Kundu.					
		Ditto 7	Kali Sari (Goddess).	Poker Pal	Mohendra and Nobo Kotal.	Rasik and Nobo Kotal.					
		Ditto 8	Mohendra Jana ...	Ram Lal Hazra	Sole Mori Poud.	Ram Lal Hazra					
		Ditto 9	Solomori Poud ...	Ram Lal Pandit	Sole Mori Poud.	Mrigendra Hazrah.					
		Sali Aol plot No. 10.	Fakir Dass Dalui	Madan Sat	Tapasi Halt, etc.	Baneswar Rana.					
				In mauza Peshora.			13 18 11	Babu Lal Kabori.	24 9	24 9	49 2
		Sali Doem plot No. 1.	Bhola Nath Patra	Denor Pesda ...	Poran Patra	Khudi Rai "(goddess."					
		Ditto 2	Naran Dalui, etc.	Babu Baksi ...	Khudi Roy ...	Tarini Bagdi					
		Ditto 3	Babu Baksi, etc	Rakhal Alu ...	Ram Lal Hazrah.	Babu Baksi, &c.					
		Ditto 4	Tarini Bagdi ...	Khudi Roy (goddess.	Babu Baksi ..	Rakhal Alu					
		Ditto 5	Faridari Chakran	Kali Goddess ...	Rakhal Alu	Soshi Chokrobutty.					
				In mauza Mamudpur.							
		Sali Soem plot No. 1.	Babu Baksi ...	Ananto Bag ...	Haroo Bag ...	Chauk idari Chakran.					
		Ditto 2	Jattra Sidhi ...	Babu Baksi ...	Tinoori Ghose	Nil ..					
		Ditto 3	Horoo Ghorui ...	Bende Metea ..	Trilok Hazrah	Ram Bag ...					
		Ditto 4	Triloke Hazra ..	Sankar Mater ...	Trilok Faridar	Babu Muti' ..					

Hooghly Collectorate, Chinsura, the 27th April 1905. K. AHMAD, *for* Collector.

Notification A.

NOTICE is hereby given, under sections 6 and 13, Act XI of 1859, that the undermentioned estates and shares of estates in the district of Purnea will be put up for sale at the office of the Collector of that district on the 29th of June 1905 at 12 o'clock noon for arrears of revenue and other demands, which by law are realizable as arrears of land revenue.

When in columns 5, 7 and 9 of the appended statement it is stated that only a share is to be sold, it is to be understood that a separate account is kept for that share and that the other share or shares in the estate are excluded from the sale.

Tauzi No.	Name of mahal and pargana.	Sadar jama of the whole estate.	Whether the whole estate is to be sold.	If only a share is to be sold, specification of such share or shares.	Names of proprietors of property to be sold.	If only a share is to be sold, the sadar jama of such share.	If the whole estate is to be sold, the arrears due from it.	If only a share is to be sold, the arrears due from it.
1	2	3	4	5	6	7	8	9
		Rs. A. P.				Rs. A. P.		Rs. A. P.
7	Surjapur, pargana Surjapur.	2,36,682 13 2	No ...	4 gandas 2 cowris 1 krant 1 dant. All other shares than that specified will be excluded from the sale.	Syed Asghar Reza Khan Bahadur of Kishanganj.	3,395 1 11½	.....	Land Revenue, 2,493 4 11½ Road Cess... 219 8 3 Total ... 2,717 13 2½

Purnea, the 17th May 1905

J. H. LEA, Collector.

Notification A.

NOTICE is hereby given, under sections 6 and 13, Act XI of 1859, that the undermentioned estates and shares of estates in the district of Backergunge will be put up for sale at the office of the Collector of that district on the 23rd June 1905 corresponding to 9th Ashar 1312 B.S., at 12 noon for arrears of revenue and other demands, which by law are realisable as arrears of land revenue.

When in columns 5, 7 and 9 of the appended statement it is stated that only a share is to be sold, it is to be understood that a separate account is kept for that share.

Tauzi No.	Name of mahal and pargana.	Sadar jama of whole estate.	Whether the whole estate is be sold.	If only a share is to be sold, specification of such share or shares.	Names of proprietors of property to be sold.	If only a share is to be sold, the sadar jama of such share.	If the whole estate is to be sold, the arrears due from it.	If only a share is to be sold, the arrears due from it.
1	2	3	4	5	6	7	8	9
		Rs. A. P.				Rs A. P.	Rs. A. P.	Rs. A. P.
1445	Joar Durgapur, pargana Bosergomedpur.	934 4 10½	.....	Residuary share 10a. will be sold and share 6a. will be excluded from the sale.	Pyari Mohon Pal and others.	512 10 10½	... ..	141 5 3½
1448	Mahal Darihat, Rajabarigunj, pargana ditto.	944 9 7	.....	Residuary share 14a. 15g. will be sold and share 1a. 5g. will be excluded from the sale.	Raja Sree Nath Roy Choudhury and others.	870 12 7	.....	57 1 5½
1479	Taluk Ganga Gobindo Nag and others, pargana ditto.	806 9 8½	Whole ...	.....	Chandra Binoda Pal Choudhury and others.	....2.	215 7 8	.....
1533	Taluk Krishna Prosad Guha, pargana ditto.	3,960 15 8	Do.	.....	Brojo Lal Roy Chaudhury and others.	.....	166 4 10½	.....
1628	Joar Ramna Barnna, taluk Mohammad Safi, pargana ditto.	19,497 10 8	.....	Separate account No. 2 share— 6a. 1g. 2kr. 2kt. 1gd 3kr. 1kt. 8til will be sold, and share 9a. 18g. 1kr. 19til 3kr. 3kg. 18gd. 1kt. 12til will be excluded from the sale.	Mr. G. L. Garth and Mr. H. L. Weatherall, trustees to the estate of Golam Ahad Choudhury and others.	7,406 13 0	.....	38 14 5
1678	Taluk Said Miron, pargana ditto.	1,183 14 9½	Whole ...	.....	Iochamoyee Gupta and others.		444 11 0½	.....
3645	Silimabad zamindari 13g., pargana Silimabad.	3,599 8 0½	.....	Residuary share 7a. 10g. will be sold, share 8a. 16g. 2½kr. will be sold separately and the rest 6a. 13g. 1½kr. will be excluded from the sale.	Kasiswari Choudhurani, executrix to the estate of her husband Durga Narayan Roy Choudhury.	1,687 4 3½	.....	742 3 6½
3645	Ditto ...	3,599 8 0½	.....	Separate account No. 1 share— 2a. 16g. 2½kr. will be sold, share 7a. 10g. will be sold separately and share 5a. 13g. 1½kr. will be excluded from the sale.	Ditto ..	637 6 7	.....	281 3 9½
4532	Abad Debpur, pargana Ratnadi Kalikapur.	2,833 0 0	Whole ..	... ..	Satis Chandra Chakravarti and others.	.....	1,749 12 0	.....
4546	Padma *alias* Ramjanpur, pargana Kasimpur, Sehalapatti.	5,383 0 0	Do. ...	... ..	Ambica Charan Chakravarty and others.	... ...	2,691 0 0	.....
4767	Char Udaypur, pargana Chandradvip.	866 0 0	Do.	.. ...	Babu Chandi Charan Chatterjee, Manager, Court of Wards, to the estate of Sir Raja Sourindra Mohan Tagore, Kt., C.I.E., etc., and another.	.. ..	866 0 0	.....
5196	Char Kakra, together with Rampur, pargana Jazira.	7,939 0 0	Do. ...	.....	Abdul Gani and others.	.	1,326 13 0	.....
5268	Char Manpura, pargana Jazira.	1,016 2 0	Do. ...	.....	Aseroddin and others	...	516 0 6	.....
6554	Surplus land of thak Koyaria, pargana Kasimpur Sehalapatti.	688 0 0	Do. ...	.....	Syed Mohammad Mozaffar Hoshen Choudhury and others.	.....	705 10 0	.....

Backergunge Collectorate, the 11th May 1905.

H. C. STREATFEILD, Collector.

Advertisement of Sale.

NOTICE is hereby given that the undermentioned plots of land, no longer required by Government, situated on the Moghalserai-Gaya Railway, in the district of Gaya, will be put up for sale at 12 o'clock noon on Friday, the 2nd June 1905, corresponding to the 14th Jeth 1312 Fusli, at the Court of the Collector of Gaya.

The purchasers of the several plots of land will be subject to the following conditions:—

1st.—The purchasers will have no power to make any excavation on the land nearer than 15 feet from the Railway fencing, or plough the land closer than three feet from its foundation.

2nd.—If the amount of purchase-money does not exceed Rs. 100, the whole amount must be paid down at once.

3rd.—If the amount of purchase-money exceed Rs. 100, one-fourth of the amount must be immediately deposited. If the balance be not paid by noon of the fifteenth day after the sale, reckoning the sale day as one, or if that day be a close holiday, then by noon of the first succeeding office day, the sale shall be cancelled, the sum deposited being forfeited to Government, and the lot again put up for sale at the risk of the defaulting purchaser, after issue of advertisement, as in the case of the original sale.

4th.—The plots of the land will be sold revenue-free to the highest bidders.

5th.—The purchasers shall be put in possession on receipt by the Collector of the orders of the Board confirming the sale.

Consecutive lot No.	Name of district.	Pargana and mauza.	Number of mile on which the land is situated.	Situated on which side of the railway.	Approximate area.	Land excluded from sale.	Commencement and termination of lot.	Boundary of lot.
					B. K. D.			
I	Gaya ...	Mauza Jamore, pargana Siris.	44th	On the south of the Railway line.	65 8 0	Nil	Nil	*North.*—Main line of Moghalserai-Gaya Railway. *South.*—Village Jhanbigha. *East.*—Lands of village Jamore. *West.*—River Baltone.
II	Do. ...	Abdulpore, pargana Charkawan.	25th	On the south and north of the Railway line.	16 15 9	Nil	1 & 2	1st lot bounded on the— *North.*—By the main line of the Moghalserai-Gaya Railway. *South and east.*—By the lands of village Abdulpore. *West.*—By river Dhodal. 2nd lot on the— *North.*—By the lands of village Abdulpore. *South.*—By the main line of the Moghalserai-Gaya Railway. *East.*—By the lands of village Abdulpore. *West.*—By river Dhawar.
III	Do. ...	Rowna, pargana Kaber.	15th	On the south of the Railway line.	5 16 2	Nil	Nil	*North.*—Nera Nadi. *South, east and west.*—By lands of village Rowna.
IV	Do. ...	Jamalpore (Asmatganj), pargana Kaber.	11th	On the north of the Railway line.	4 0 4	Nil	Nil	*North, west and east.*—By the lands of village Asmatganj. *South.*—By main line.
V	Do. ...	Sakhawa, pargana Dakhmer.	9th & 10th	On the south of the Railway.	25 17 12	Nil	Nil	*North.*—Lands of village Sakhawa. *South.*—Main line of the Moghalserai-Gaya Railway. *East.*—Lands of Sakhawar and Dakhmer *West.*—Lands of Sakhawar.

Gaya, the 12th April 1905.

SHAMSUDDIN HYDER, *for* Collector.

Advertisement of Sale.

NOTICE is hereby given that the undermentioned plots of land, no longer required by Government, situated along the Chowrashi Branch of the Bengal-Nagpur Railway, in the district of Manbhum, will be put up to sale at 4 P.M. on Thursday, the 8th June 1905, corresponding to the 25th Jaista 1312 B.S., at Ramkanali station of the Bengal-Nagpur Railway.

The purchasers of the several plots of land will be subject to the following conditions:—

1st.—The purchasers will have no power to make any excavations on the land nearer than fifteen feet from the Railway boundary, or to plough the land nearer than three feet from the same.

2nd.—If the amount of purchase-money does not exceed Rs. 100, the whole amount must be paid down at once.

3rd.—If the amount of purchase-money exceeds Rs. 100, one-fourth of the amount must be immediately deposited. If the balance be not paid by noon of the fifteenth day after the sale, reckoning the day of sale as one, or if that day be a close holiday, then by noon of the first succeeding office day, the sale shall be cancelled, the sum deposited being forfeited to Government, and the lot again put up for sale at the risk of the defaulting purchaser, after issue of advertisement, as in the case of original sale.

4th.—The plots of land will be sold revenue-free to the highest bidders.

5th.—The purchasers shall be put in possession on receipt by the Collector of the orders of the Board confirming the sale.

Consecutive lot No.	Name of district.	Pargana and mauza.	Number of mile on which land is situate.	Situated on which side of the railway.	Approximate area of lot in bighas and in acres.	
					B. K. C.	A. R. P.
1 and 2	Manbhum ...	Pargana Chowrashi, villages Nodiha and Narainpur.	8	On the north side of the railway line.	27 9 5·01	9 0 12·73

GANGA CHARAN CHATTERJEE, Collector under Act I of 1894, Burdwan and Manbhum.

Land Acquisition Office, Burdwan and Manbhum, the 15th April 1905.

Advertisement of Sale.

NOTICE is hereby given that the undermentioned plots of land, no longer required by Government, situated along the Hajipur Branch Railway, in the district of Muzaffarpur, will be put up to sale at 1 o'clock on Friday, the 30th June 1905, corresponding with the 13th Jaith of 1312 Fusli, at Muzaffarpur.

The purchasers of the several plots of land will be subject to the following conditions:—

1st.—The purchasers will have no power to make any excavations on the land nearer than 15 feet from the railway boundary, or to plough the land nearer than 3 feet from the same.

2nd.—If the amount of purchase-money does not exceed Rs. 100, the whole amount must be paid down at once.

3rd.—If the amount of purchase-money exceed Rs. 100, one-fourth of the amount must be immediately deposited. If the balance be not paid by noon of the fifteenth day after the sale, reckoning the day of sale as one, or if that day be a close holiday, then by noon of the first succeeding office day, the sale shall be cancelled, the sum deposited being forfeited to Government, and the lot again put up for sale at the risk of the defaulting purchaser, after issue of advertisement, as in the case of original sale.

4th.—The plots of land will be sold revenue-free to the highest bidders.

5th.—The purchasers shall be put in possession on receipt by the Collector of the orders of the Board confirming the sale.

Consecutive Lot No.	Name of district.	Pargana and mauza.	Number of mile on which land is situate.	Situated on which side of the Railway.	Approximate area of lot in bighas and in acres.		Land excluded from sale from each lot.		Commencement and termination of lot.	Boundary of lot.
					B. K. C.	A. R. P.	Reasons for exclusion.	A. R. P.		
1	Muzaffarpur.	Chupralodi *alias* Marlpore and Bhagwanpore, pargana Besara.	Mile 1 of Hajipur line.	West of the Railway.	0 12 5	0 0 32		.....	.....	*North*—Orchard of Tabarak Hussain. *South*—Public road. *East*—Railway fencing. *West*—Orchard of Kunja Sahu.
2	Ditto ...	Chupralodi *alias* Marlpore.	Ditto ...	East of the Railway.	0 4 4	0 0 11·2	.....	.....	.....	*North*—Garden of Mr. Franjy. *South*—Public road. *East*—Garden of Mr. Franjy. *West*—Railway fencing.
3	Ditto ...	Ditto ...	Miles 1 and 2 of Hajipur line.	Ditto ...	0 4 0	0 0 11	.....	.....	...	*North*—Public road. *South*—Orchard of Safdar Hussain. *East*—Orchard of Abdul Jabar. *West*—Railway fencing.
	Ditto ...	Ditto ...	Ditto ...	On both sides of the Railway.	2 18 2	0 2 20	This being a part of the District Board road.	0 2 20	.....	

The 17th April 1905.

KALI MOHAN SEN, for Collector.

Advertisement of Sale.

NOTICE is hereby given that the proprietary right of Government, as specified in the conditions of sale below, to the undermentioned estate, situate in the district of Muzaffarpur, will be put up to sale at the Muzaffarpur Collectorate on the 5th June 1905.

The purchasers will be subject to the following conditions of sale:—

Conditions of Sale.

1st.—The estate to be sold to the highest bidder above the upset price, which will be fixed by the Collector at the time of sale. The purchaser of this estate will be considered as the proprietor of the estate, and the entire proprietary right of Government in such estate will be transferred to him subject to the revenue fixed in perpetuity.

2nd.—The sale to be subject to existing leases and to the rights conferred by the settlement proceedings and by the laws in force, and the purchasers to be bound to respect the rights of resident cultivators who have signed the schedule of assessment prepared by the Revenue authorities.

3rd.—If the amount of purchase-money do not exceed Rs. 100, the whole amount to be paid down at once.

4th.—If the amount exceed Rs. 100, one-fourth of the amount bid to be immediately deposited. If the balance be not paid by noon of the fifteenth day after the sale, reckoning the day of sale as one, or if that day be a close holiday, then by noon of the first succeeding office day, the sale is to be cancelled, the sum deposited being forfeited to Government, and the estate to be again put up to sale at the risk of the defaulting purchaser after issue of advertisement as in the case of original sale.

Number on the district roll.	Name of estate and pargana.	Approximate area in acres.	Government revenue assessed.	Remarks.
			Rs. A. P.	
11799	Baijnathpur Katesar, pargana Tariani	67	1 8 9	

Muzaffarpur Collectorate, the 28th April 1905.

E. V. LEVINGE, Collector.

Notification A.

NOTICE is hereby given, under sections 6 and 13, Act XI of 1859, that the undermentioned estates and shares of estates in the district of Gaya will be put up for sale at the office of the Collector of that district on the 5th June 1905 at 6 A.M., for arrears of revenue and other demands which by law are realisable as arrears of land revenue.

When in columns 5, 7 and 9 of the appended statement it is stated that only a share is to be sold, it is to be understood that a separate account is kept for that share, and that the other share or shares in the estate are excluded from the sale.

Tauzi No.	Name of mahal and pargana.	Sadar jama of whole estate.	Whether the whole estate is to be sold.	If only a share is to be sold, specification of such share or shares.	Names of proprietors of property to be sold.	If only a share is to be sold, the sadar jama of such share.	If the whole estate is to be sold, the arrears due from it.	If only a share is to be sold, the arrears due from it.
1	2	3	4	5	6	7	8	9
		Rs. A. P.				Rs. A. P.	Rs. A. P.	Rs. A. P.
1369	Shahbaspur Tesour, pargana Bhelawar.	508 13 0	The whole	.....	Mussammat Rani Sunder Koer.	.....	148 15 0	.....
3274	Nadawat, pargana Narhat.	2,500 0 0	Ditto ...	.....	Ditto ...	.....	936 8 0	.....
4253	Mohanpore Khijua Wagairah Yazdah kalam, pargana Pachrukhi.	3,031 0 0	.....	The residuary ijmali share exclusive of the separated shares consisting of—	Dirgopal Lal ...	1,195 0 0	.....	47 10 6
				As.				
				1. Mohanpore 4				
				2. Baupatpore 4				
				3. Khijua 4				
				4. Chhaball 8				
				5. Chamotha 12				
				6. Mahudih 12				
				7. Kendua Karanpore 12				
				8. Gorhari 4				
				9. Berdih 12				
4611	Asamgarh taluqa, pargana Sherghatti.	5,231 12 0	.....	The residuary ijmali share exclusive of the separated shares consisting of—	Kali Charan Singh.	4,216 12 0		1,697 10
				As. P. K. K.				
				1. Asamgarh Masaurha Gangti ... 11 4 0 0				
				2. Adalpore 16 0 0 0				
				3. Andho Majhaulia ... 16 0 0 0				
				4. Amnabad 6 8 0 0				
				5. Amas-Bhuilpore .. 16 0 0 0				
				6. Bande Gara ... 6 8 0 0				
				7. Bankey 6 8 0 0				
				8. Bankey Barnodh ... 6 8 0 0				
				9. Bishunpore 9 4 0 0				
				10. Bela 6 8 0 0				
				11. Burha Burhi Lengurahi 11 4 0 0				
				12. Bajarkar 6 8 0 0				
				13. Bhimchak 16 0 0 0				
				14. Bahera Khurd ... 16 0 0 0				
				15. Berri 16 0 0 0				
				16. Chainpore 16 0 0 0				
				17. Chilore 16 0 0 0				
				18. Dahlar 16 0 0 0				
				19. Dharampore 16 0 0 0				
				20. Dhamna main chak Dhamni 16 0 0 0				
				21. Dhanawan 16 0 0 0				
				22. Dhirjabirha 9 9 6 5				
				23. Diha chak Deona Kaleyanpore ... 16 0 0				
				24. Dumrawan khas ... 11 4 0 0				
				25. Gangti 16 0 0 0				
				26. Garhwaiya 6 8 0 0				
				27. Itawan 6 8 0 0				
				28. Jamuar khurd ... 16 0 0 0				
				29. Koil chak 6 8 0 0				
				30. Kajh 16 0 0 0				
				31. Kondua Kadarkoil 11 4 0 0				
				32. Kesapi 16 0 0 0				
				33. Kartahi 16 0 0 0				
				34. Kondua khas... ... 16 0 0 0				
				35. Khodga or Khudgi 11 4 0 0				
				36. Manjhaulia Khurd 11 4 0 0				
				37. Madanbigha ... 9 9 6 5				
				38. Man Kuari Mam Zamin Bank ... 6 8 0 0				
				39. Mandar 6 8 0 0				
				40. Nima 16 0 0 0				
				41. Nawedah 16 0 0 0				
				42. Nawakhap 6 8 0 0				
				43. Nonlachak 16 0 0 0				
				44. Pirauli 16 0 0 0				
				45. Pampapore 16 0 0 0				
				46. Pathra Kalan and Khurd 16 0 0 0				
				47. Pandania Mohan Charwar Dhamdhua 16 0 0 0				
				48. Parsa Nizamat ... 16 0 0 0				
				49. Ratanchak 11 4 0 0				
				50. Rohi Parewa Dhewa 16 0 0 0				
				51. Sonspore 6 8 0 0				
				52. Simarbat 16 0 0 0				
				53. Sundokumhari ... 16 0 0 0				
				54. Sarara 11 4 0 0				
				55. Sonedaha Choroban Ratansomoth ... 16 0 0 0				
				56. Sagdiha 16 0 0 0				
				57. Sarawankhas ... 16 0 0 0				
				58. Sondiha 16 0 0 0				
				59. Saiganj Belhari ... 16 0 0 0				
				60. Sherghatti khas ... 6 8 0 0				
				61. Singhpore 8 8 0 0				
				62. Simarbat 16 0 0 0				
				63. Tetaria 16 0 0 0				
				64. Tulachak 16 0 0 0				
				65. Telibandh Sorbar ... 16 0 0 0				
				66. Tikra khurd .. 16 0 0 0				

Touzi No.	Name of mahal and pargana.	Sadar jama of whole estate.	Whether the whole estate is to be sold.	If only a share is to be sold, specification of such share or shares.	Names of proprietors of property to be sold.	If only a share is to be sold, the sadar jama of such share.	If the whole estate is to be sold, the arrears due from it.	If only a share is to be sold, the arrears due from it
1	2	3	4	5	6	7	8	9
		Rs. A. P.				Rs. A. P.	Rs. A. P.	Rs. A. P.
4466	Gurua taluqa, pargana Sherghatti.	15,997 14 0	.....	Separate account No. 8, consisting of—	Musammat Fakhrunnissa Begam and others.	537 4 0	.....	53 11 1
						As. P. K.		
				1. Rajpore		6 3 0		
				2. Beldih .. .		8 0 0		
				3. Kurhara		8 0 0		
				4. Kendua		0 9 12		
				5. Baraini Chak ...		2 4 0		
				6. Babak		8 0 0		
				7. Tilaiya Khiri ...		8 0 0		
				8. Jalalpore		8 0 0		
				9. Deoguria		8 0 0		
				10. Ramabigha		8 0 0		
				11. Shrampore		8 0 0		
				12. Gambaria Tetaria Bishunbigha ...		8 0 0		
				13. Bankat		8 0 0		
				14. Kamalpore Ismailpore Kalayanpore ...		8 0 0		
				15. Kumbhi Shamali ...		8 0 0		
				16. Moharakpore ...		4 0 0		
4579	Jaipur Dumrawan, pargana Sherghatti.	4,898 8 0		The residuary ijmali share exclusive of the separated shares consisting of—	Durga Prasad ...	1,035 8 0	.....	446 12 0
						As.		
				1. Jaipur-Dumrawan		8		
				2. Akhowri Khap		8		
				3. Pindra		8		
				4. Zari Khap		8		
				5. Daudpore *alias* Pandoul ...		8		
				6. Deoghar Khap		4		
				7. Ibrahimpore		8		
				8. Hardia		8		
				9. Kothua		8		
				10. Mukhdumpore		8		
				11. Basir Khap		4		
				12. Manjhar		8		
4772	Angni, pargana Siria.	532 3 0	The whole	.....	Raghupat Pratap Singh and others.	.....	0 2 0	.....

Gaya Collectorate, the 5th May 1905. J. DONALD, Collector.

Notification A.

NOTICE is hereby given, under sections 6 and 13, Act XI of 1859, that the undermentioned estates and shares of estates in the district of Birbhum will be put up for sale at the office of the Collector of that district on the 24th June 1905 at 11 A.M. for arrears of revenue and other demands, which by law are realisable as arrears of land revenue.

When in columns 5, 7 and 9 of the appended statement it is stated that only a share is to be sold, it is to be understood that a separate account is kept for that share, and that the other share or shares in the estate are excluded from the sale.

Touzi No.	Name of mahal and pargana.	Sadar jama of whole estate.	Whether the whole estate is to be sold.	If only a share is to be sold, specification of such share or shares.	Names of proprietors of property to be sold.	If only a share is to be sold, the sadar jama of such share.	If the whole estate is to be sold, the arrears due from it.	If only a share is to be sold, the arrears due from it.
1	2	3	4	5	6	7	8	9
		Rs. A. P.				Rs. A. P.		Rs. A. P.
17	Kugash, pargana Moureswar Sabek.	17,182 13 0	.....	Residuary share 2a. 19g. 3k. 1kt. and 6d. share of mauzas Amdahara Chuk, Alal-Bandi, Ishabpur, Ishanpur *alias* Ichakpur, Uttormath, Khuti, Kaiyanpur, Kugash, Kartickguni, Kalipur, Kachuighata, Kushumjatra, Kusaipur, Kistopur, Khatipur, Khagra Chuk, Khurja, Chandpur, Jamkala, Jalla, Jhikordaha Chuk, Thakurasown Chuk, Tikordaha, Tilpara Chuk, Dasi Rajejami-Rajeupti, Dhobagaon, Dhobajole, Nowapara, Nanas Chuk, Nirisha, Paikpara, Pargaon, Piasala, Bahara Chuk, Bella, Bipra-Salgoria, Buicha Chuk, Bhagabatipur, Moidipur, Mallati, Mahatatpur Chuk, Mohidipur Chuk, Mohespur, Maligaon Chuk, Metery, Rasulgunj, Rajnallav Chuk, Rupasihi, Salgoria, Sibpur, Salamath, Horikora, Horispur, Hazarpur, and 3a. 5g. 10kag of Banara and Banadoorgunj. All other shares than that specified will be excluded from the sale.	Asu Tosh Mookerjee and others.	2,945 15 0	.....	156 9 10

Birbhum Collectorate, Suri, the 4th May 1905. S. C. MUKERJEE, Collector.

Notification A.

NOTICE is hereby given, under sections 6 and 13, Act XI of 1859, that the undermentioned estates and shares of estates in the district of Shahabad will be put up for sale at the office of the Collector of that district on Saturday, the 3rd June 1905, corresponding to 10th Jeth 1312 F.S., at 7 A.M., for arrears of revenue and other demands which by law are realisable as arrears of land revenue.

When in columns 5, 7 and 9 of the appended statement it is stated that only a share is to be sold, it is to be understood that a separate account is kept for that share.

Tauzi No.	Name of mahal or pargana.	Sadar jama of whole estate.	Whether the whole estate is to be sold.	If only a share is to be sold, specification of such share or shares.	Names of proprietors of property to be sold.	If only a share is to be sold, the sadar jama of such share.	If the whole estate is to be sold, the arrears due from it.	If only a share is to be sold, the arrears due from it.
1	2	3	4	5	6	7	8	9
387	Lowhur Bujrug, pargana Arrah.	Rs. A. P. 808 .0 8	Whole ...	.....	Aadesh Singh and others.	Rs. A. P.	Rs. A. P. 5 0 9	Rs. A. P. .....
434	Mahuli Khurd, pargana Arrah.	550 0 0	Do.	.....	Ram Charan Singh and others.	.....	175 0 0	.....
2075 / 21	Amson, pargana Chainpur.	11,361 13 8	Nil ...	The shares of khata No. 21 to be sold are as follows :—	Thakur Kuldip Narain Singh and others.	565 8 3	.....	80 11 0

	As	P.	K.
Amson	1	1	10
Amaraha	1	1	10
Anantpur Khilopur	1	1	10
Asilai Patna	1	1	10
Bararhi	1	1	10
Baheri	1	1	10
Chintamanpur	1	1	10
Dandwa Viran	1	1	10
Dasaunti	1	1	10
Dewane	1	1	10
Dandwa Dakhili Fakhirabad	0	8	2
Rampur	1	1	10
Rampur Bareju	1	1	10
Sahe Sahe	1	1	10
Sardanr	1	1	10
Semri	1	1	10
Saralia	1	1	10
Sarai Dharhar	1	1	10
Piparia	1	1	10
Bhadoura	0	8	2
Nati	1	0	0
Pipra Sakarwar	1	1	10
Pakarinar	1	1	10
Jamurni	1	1	10
Chouthi	1	1	10
Chak Kalaundi *alias* Chakia	1	1	10
Sikandarpur	0	8	2
Sikara	1	1	10
Surhia	1	1	10
Kulharia	1	1	10
Gorahand	1	1	10
Koharl	1	1	10
Karaunsi	1	1	10
Ismailpur	1	1	10
Kundwa	1	1	10
Kharsanda	1	1	10
Gaugapur	0	8	2
Mohia	1	1	10
Nauan Bijai	1	1	10
Bagachhara	1	1	10

Khatas Nos. 21, 64, 67, 68 and 70 will also be sold.

The following shares are excluded from sale :—

Khata No. 1—
Three annas in each of the villages—
Ismailpur, Amson, Amaraha, Anantpur, Khilopur, Asilai Patna, Bararhi, Baheri Piparia, Bhadoura, Nati, Pipra Sakarwar, Pakarihar, Jamurni, Chouthi, Chak Kalaundi *alias* Chakia, Chintamanpur, Asilai Khurd, Dasaunti, Dewani, Dandwa Viran, Rampur, Bareju, Sahe Sahe, Sardanr, Sarihra, Bagachhara, Rajpur, Milki, Nibi, Bharuhia, Mohammadpur, Saralia, Sarai, Dharhand, Dandwa, Dakhili Fakharabad, Sikandarpur, Sikara, Silathua, Surhia, Silari, Karanpura, Kulharia, Gorahand, Koharl, Karaunsi, Kundwa, Kharsanda, Mohia, Nauan Bijai, Dighi, Lahupokar.

Khata No. 2—
Three annas in each of the villages Kharsanda and Dasaunti.

Khata No. 3—

	As.	P.
Koharl	3	0

Khata No. 4—

Jamurni	4	0

Khata No. 5—

Sikandarpur	3	0
Bhadoura	3	0

Khata No. 6—

Mohia	3	0
Gorahand	3	0

Tauzi No.	Name of mahal or pargana.	Sadar jama of whole estate.	Whether the whole estate is to be sold.	If only a share is to be sold, specification of such share or shares.	Names of proprietors of property to be sold.	If only a share is to be sold, the sadar jama of such share.	If the whole estate is to be sold, the arrears due from it.	If only a share is to be sold, the arrears due from it.
1	2	3	4	5	6	7	8	9
2075 21	Amaon, pargana Chainpur—*contd.*	.....	.....	Khata No. 7— Sarai Dharhand ... ... Rs. 3 P. 0 Khata No. 8— Gangapur ... ... 3 0 Khata No. 9— Sahe Bahe ... ... 3 6 Khata No. 11— Rararhi ... ... 4 0 Khata No. 12— Silari ... ... 3 9 Khata No. 13— Sarai Dharhar ... ... 1 0 Khata No. 14— Two annas in each of the villages— Ismailpur, Amaon, Amaraha, Anantpur, Khilopur, Asilai Patna, Asilai Khurd, Bararhi, Baheri, Piparia, Bhadoura, Nati, Pipra Sakarwar, Pakarihar, Jamurni, Chouthi, Chak Kalaundi *alias* Chakia, Chintamanpur, Dasaunti, Dewane, Dandwa Viran, Rampur, Rampur Bareju, Sahe Bahe, Sirdaur, Sirihra, Bagachhara, Rajpur, Milki, Nibi, Bharuhia, Mohomadpur, Saralia, Sarai Dharhand, Dandwa Dakhili Fakarabad, Sikandarpur, Sikara, Silathua, Semaria, Surhia, Silari, Karanpura, Kulharia, Gorahand, Koheri, Karaunsi, Kundwa, Kharsanda, Gangapur, Mehia, Nauan Bijai, Dighi, and Lahopokar. Khata No. 15— Pakarihar ... ... P. 7 K. 10 Khata No. 16— Two annas in each of the villages named against khata No. 14. Khata No. 17— Rs. Gangapur ... ... 1 P. 0 K. 13 Sikandarpur ... ... 1 0 13 Bhadoura ... ... 1 0 13 Khata No. 18— Karanpura ... ... 4 8 0 Khata No. 19— Bhadoura ... ... 0 6 0 Amaraha ... ... 0 6 0 Chauthi ... ... 0 6 0 Dandwa ... ... 2 0 0 Sikandarpur ... ... 0 6 0 Khata No. 20— 4a. 1p. 10k. in Sirihra, Bagachhara, Rajpur, Milki, Nibi, Bharuhia, Mohomadpur and Asilai Khurd. Khata No. 22— 11p. 16k. in each of the villages noted against khata No. 14, except in village Bhadoura, Dandwa, Dakhili, Fakharabad, Ganrapur and Sikandarpur which are not in khata No. 22. Khata No. 23— 3p. 14k. in each of the villages noted in khata No. 14. Khata No. 25— Sahe Bahe ... ... P. 6 Khata No. 26— Amaon 1a. 4p. 10k. and 6p. in each of the villages Asilai Patna, Lahopokar, Dighi, Asilai Khurd, Sirihara, Bagachhara, Rajpur, Milki, Nibi, Bharuhia, Mohomadpur, Nati, Pipra, Sakarwar, Rampur Bareju, Jamurni, Dasaunti, Dewane, Sahe Bahe, Silathua Kundwa, Kulharia, Kharsanda Anantpur, Khilopur and Nana Bijai. Khata No. 27— Amaon 5p. 10k. and 2p. in each of the villages noted against Khata No. 26 except Amaon. Khata No. 28— Rs. Diwane ... ... 2 Khata No. 29— Diwane ... ... 1 Khata No. 30— Sikara 3				

Tauzi No.	Name of mahal or pargana.	Sadar jama of the whole estate.	Whether the whole estate is to be sold.	If only a share is to be sold, specification of such share or shares.	Names of proprietors of property to be sold.	If only a share is to be sold, the sadar jama of such share.	If the whole estate is to be sold, the arrears due from it.	If only a share is to be sold, the arrears due from it.
1	2	3	4	5	6	7	8	9
2076/21	Amaon, pargana Chainpur—*contd.*	..	.....	Khata No. 31— As. Baheri ... ... 4 Khata No. 32— Two pies in each of the villages Amaraha, Chanthi, Bararhi, Surhia, Baheri, Rampur, Semaria, Mehia, Gorahand, Kundwa, Karaunsi, Silari, Kohari, Anantpur, Khilopur, Rampur Bareju, Pipara Sakarwar, Sikara. Khata No. 33— P. Amaon ... ... 6 Sahe Bahe ... ... 6 Nauan Bijai ... ... 6 Khata No. 34— As. P. Chak Kalaundia *alias* Chakia ... 3 8 Khata No. 35— As. P. K. Sikandarpur ... ... 1 0 10 Dandwa .. .. 1 0 12 Bhadoura ... ... 1 0 10 Gangapur ... ... 1 0 19 Khata No. 36— As. P. Pipra Sakarwar ... ... 0 9 Khata No. 37— Chak Kalaundi *alias* Chakia ... 1 0 Khata No. 38— Pipra Sakarwar ... . 0 9 Khata No. 39— As. P. K. M. D. Nati ... ... 1 5 16 16 0 Khata No. 40— Pakarihar ... ... 1 5 9 13 5 Khata No. 41— As. Sikara ... ... 1 Khata No. 42— Rampur ... ... 1 Garahand .. .. 1 Semaria ... ... 1 Mehia ... ... 1 Khata No. 43— Bagachhara ... ... 3 Khata No. 44— P. Jamurni ... ... 3 Khata No. 45— Amaon 10p. Sirihara, Bagachhara, Milki, Nibi, Bharuhia, Rajpur and Mohomadpur 1p. P. Aailai Khurd ... ... 1 Pipra Sakarwar ... ... 1 Rampur Bareju ... ... 1 Nati ... ... 1 Jamurni ... ... 2 Dasaunti ... ... 2 Silathua ... ... 1 Sahe Bahe ... ... 1 Kundwa ... ... 1 Kulharia ... . 2 Kharsanda ... ... 2 Anantpur Khilopur ... ... 1 Nauan Bijai ... ... 1 Dewane ... ... 1 Khata No. 46— Silathua ... ... 8 Khata No. 47— Dasaunti ... ... 3 Khata No. 48— As. Nauan Bijai ... ... 3 Khata No. 49— As. P. K. Amaon ... ... 1 3 0 Khata No. 50— Kulharia ... ... 1 8 0 Khata No. 51— Silathua ... ... 3 0 0 Khata No. 52— Silathua ... ... 1 1 10 Khata No. 53— Chintamanpur ... ... 3 0 8 Khata No. 54— Aailai Patna 6p., Dighi 6p., Nati 6p., Saralia 6p., Lahohokar 6p., Aailai Khurd 6p., Pipra Sakarwar 6p., Sirihara, Bagachhara, Rajpur, Milki, Nibi, Bharuhia, Mohomadpur 6p., Piparia 2p.				

Tauzi No.	Name of mahal or parganа.	Sadar jama of the whole estate.	Whether the whole estate is to be sold.	If only a share is to be sold, specification of such share or shares.	Names of proprietors of property to be sold.	If only a share is to be sold, the sadar jama of such share.	If the whole estate is to be sold, the arrears due from it.	If only a share is to be sold, the arrears due from it.
1	2	3	4	5	6	7	8	9
2075 31	Amaon, parganа Chainpur—*contd.*	.....	.....	**Khata No. 55—** Kulharia ... ... As. 0 P. 9 **Khata No. 56—** Anantpur Khilopur ... ... 3 0 **Khata No. 57—** Gangapur ... ... 1 0 **Khata No. 58—** P. Amaraha ... ... 2 Chauthi ... ... 2 Sikandarpur ... ... 2 Bhadoura ... ... 2 Dandwa ... ... 11 **Khata No. 59—** Amaraha ... ... 2 Chauthi ... ... 2 Sikandarpur ... ... 2 Bhadoura ... ... 2 Dandwa ... ... 11 **Khata No. 60—** As. P. K. Amaraha ... ... 0 2 0 Chauthi ... ... 0 2 0 Sikandarpur ... ... 0 2 0 Bhadoura ... ... 0 2 0 Dandwa ... ... 1 2 12 **Khata No. 61—** As. P. K. Asilai Patna ... ... 0 1 10 Rampur Bareju ... ... 1 10 0 Nati ... ... 0 1 10 Jamurni ... ... 0 1 0 Amaon ... ... 0 1 10 Asilai Khurd ... ... 0 1 10 Pipra Sakarwar ... ... 0 1 10 Sirihara, Bagachhara, Rajpur, Milki, Nibi, Baruhia, Mohomadpur ... ... 0 1 10 Dasaunti ... ... 0 1 0 Silathua ... ... 0 1 10 Sahe Bahe ... ... 0 1 10 Kundwa ... ... 0 1 10 Kulharia ... ... 0 1 0 Lahopokar ... ... 0 1 10 Dighi ... ... 0 1 10 Kharsaunda ... ... 0 1 0 Anantpur Khilopur ... ... 0 1 10 Nauan Bijai ... ... 0 1 10 Dewane ... ... 0 1 10 **Khata No. 62—** P. K. Amaon ... ... 0 10 Asilai Khurd ... ... 1 10 Sahe Bahe ... ... 1 10 Nauan Bijai ... ... 1 10 Sirihara, Bagachhara, Rajpur, Milki, Nibi, Bharuhia, Mohomadpur ... ... 1 10 **Khata 63—** As. Gangapur ... ... 3 **Khata No. 64—** As. P. K. Asilai Patna ... ... 2 10 0 Dighi ... ... 2 10 0 Pipra Sakarwar ... ... 1 10 0 Nati ... ... 0 1 10 Lahopokar ... ... 2 10 0 Rampur Bareju ... ... 0 1 10 Jamurni ... ... 0 1 0 Kulharia ... ... 0 1 0 Kharsanda ... ... 0 1 0 Dasaunti ... ... 0 1 0 Dewani ... ... 0 1 10 Anantpur Khilopur ... ... 0 1 10 Kundwa ... ... 0 1 10 Silathua ... ... 0 1 10 **Khata No. 65—** As. P. K. M. D. Amaon ... ... 0 0 6 13 5 Pakarihar ... ... 0 4 1 5 0 Lahopokar ... ... 0 1 0 0 0 Sahe Bahe ... ... 0 0 6 13 5 Jamurni ... ... 0 0 16 13 5 Surhia ... ... 0 1 0 0 0 Nauan Bijai ... ... 0 0 6 13 5 Chauthi ... ... 0 7 0 0 0 Baheri ... ... 0 1 0 0 0 Dasaunti ... ... 0 0 16 13 5 Sikandarpur ... ... 0 0 0 6 10 Kohari ... ... 0 2 0 0 0 Asilai Patna ... ... 0 0 6 13 5 Dandwa Viran ... ... 0 0 0 6 10 Garahar ... ... 0 1 0 0 0 Amaraha ... ... 0 7 0 0 0 Ismailpur ... ... 0 0 0 6 10 Mehia ... ... 0 1 0 0 0 Anantpur Khilapur ... 0 1 0 0 0 Bhadoura ... ... 0 0 0 6 10 Kharsanda 0 0 13 6 10			

Tauzi No.	Name of mahal or pargana.	Sadar jama of the whole estate.	Whether the whole estate is to be sold.	If only a share is to be sold, specification of such share or shares.	Names of proprietors of property to be sold.	If only a share is to be sold, the sadar jama of such share.	If the whole estate is to be sold, the arrears due from it.	If only a share is to be sold, the arrears due from it.
1	2	3	4	5	6	7	8	9
2075 21	Amaon, pargana Chainpur—*concld.*	Rs. A. P.		Khata No. 65—*concld.* As. P. K. M. D. Pipara Sakarwar ... 0 3 0 0 0 Gangapur ... ... 0 0 0 6 10 Rampur Bareju ... 0 7 0 0 0 Karanpura ... ... 0 2 5 0 0 Sarai Dharhand ... 0 1 6 13 5 Bararhi ... ... 0 1 0 0 0 Nati ... ... 0 3 16 14 0 Kulharia ... ... 0 2 10 0 0 Dighi ... ... 0 1 0 0 0 Silari ... ... 0 2 6 10 13 Sirahara, Bharuhia, Milki, Rajpur, Nibi, Mohomadpur ... ... 0 0 6 13 5 Bagachhara ... ... 0 0 6 13 5 Sikara ... ... 0 1 0 0 0 Rampur ... ... 0 1 0 0 0 Kundwa ... ... 0 7 0 0 0 Dewani ... ... 0 1 6 13 5 Semaria ... ... 0 1 0 0 0 Piparia ... ... 1 6 0 0 0 Chintamanpur ... ... 0 3 5 5 0 Saraila ... ... 0 3 6 13 5 Karaunsi ... ... 0 9 0 0 0 Khata No. 69— As. Rampur ... ... 6 Semaria ... ... 6 Ijmal— As. P. K. M. D. Amaon, Sahe Bahe, Aailai Patna, Aaila Khurd ... ... 0 1 13 6 10 Bararhi Baheri ... 0 5 0 0 0 Piparia ... ... 3 0 0 0 0 Dewani ... ... 0 6 13 6 10 Rampur ... ... 0 5 0 0 0 Sirihara, Bagachhara, Rajpur, Milki, Nibi, Bharuhia and Mohomadpur ... ... 0 1 13 6 10 Sarai Dharhar ... ... 0 6 13 6 10 Sikandarpur ... ... 0 0 1 13 5 Sikara ... ... 0 0 5 0 0 Simaria ... ... 0 0 5 0 0 Surhia ... ... 0 0 5 0 0 Karanpura ... ... 0 11 5 0 0 Garahand ... ... 0 5 0 0 0 Kharsanda ... ... 0 3 6 13 5 Gangapur ... ... 0 0 1 13 5 Mehla ... ... 0 5 0 0 0 Ismailpur ... ... 4 7 10 13 5 Amaraha ... ... 2 11 0 0 0 Anantpur Khilopur ... 0 5 0 0 0 Bhadoura ... ... 0 0 1 13 5 Nati ... ... 1 0 9 16 0 Pipara Sakarwar ... 1 5 0 0 0 Pakarihar ... ... 2 2 10 1 10 Jamurni ... ... 0 4 3 6 10 Chanthi ... ... 2 11 0 0 0 Chintamanpur ... ... 1 4 6 0 15 Dasaunti ... ... 0 4 3 6 10 Dandwa Viran ... 4 7 10 13 5 Rampur Bareju ... 2 11 0 0 0 Saraila ... ... 3 5 13 6 10 Siardanr ... ... 4 8 0 0 0 Silari ... ... 1 5 3 9 2 Kulharia ... ... 1 0 10 0 0 Kohari ... ... 1 3 0 0 0 Karaunsi ... ... 3 9 0 0 0 Kundwa ... ... 2 11 0 0 0 Nauan Bijai ... ... 0 1 6 13 5 Dighi ... ... 0 1 0 0 0 Lahopokar ... 0 1 0 0 0		Rs. A. P.	Rs. A. P.	Rs. A. P.
2075 24, 26, 67, 69 and 70	Amaon, pargana Chainpur.	11,261 13 4	....	The shares of Khata No. 24 are to be sold, runs thus:— Four annas in Aailai Patna, Lahopokar, Dighi and 1s. 10p. 10k. in Silathua and 2s. in each of the villages Ismailpur, Amaon, Amaraha, Anantpur Khilopar, Aailai Khurd, Bararhi, Baheri, Piparia, Bhadoura, Pipra Sakarwar, Pakarihar, Jamurni, Chanthi, Chak Kolsundi *alias* Chakia, Chintamanpoor, Dasaunti, Dewane, Dandwa Viran, Rampur, Rampur Bareju, Sahe Bahe, Sirihara Bagachhara, Rajpur, Milki, Nibi, Bharuhia, Mohomadpur, Saraila, Sarai Dharhand, Sikandarpur, Sikara, Semaria, Surhia, Silari, Karanpura, Kulharia, Gorahand, Kohari, Karaunsi, Kundwa, Kharsanda, Gangapur, Mehla, and Siardanr. Khata No. 66— P. K. Silathua ... ... 1 10 Khata No. 67— Aailai Patna, 1s., Dighi 1s., Lohopokar 1s.	Lachhmi Chand *alias* Raja Lal and others. Abdul Rahman and others. Mosst. Daropati Bibi *alias* Doulat Bibi, widow of Bimaldas. Permeshar Dyal Singh and others. Sitaram and others.	1,435 10 8 2 11 0 56 13 9 15 15 0 73 7 7	.....	199 15 9

Tauzi No.	Name of mahal or pargana.	Sadar jama of the whole estate.	Whether the whole estate is to be sold.	If only a share is to be sold, specification of such share or shares.	Names of proprietors of property to be sold.	If only a share is to be sold, the sadar jama of such share.	If the whole estate is to be sold, the arrears due from it.	If only a share is to be sold, the arrears due from it.
1	2	3	4	5	6	7	8	9
		Rs. A. P.				Rs. A. P.	Rs. A. P.	Rs. A. P.
2075 24, 66, 67, 68 and 70	Amaon, pargana Chainpur.	.....	.....	Khata No. 66— Nana Bijai 2s. 6k. 13m. 5d. It may be noted here that this khata No. 66 has been opened for 2s. from khata No. 24 and for 6k. 13m. 5d. from Ijmal. Khata No. 70— Nati 2s. 5p. 6k. 14m. It may be noted here that this khata No. 70 has been opened for 2s. from khata No. 24, for 1p. 10k. from khata No. 21 and for 2p. 16k. 14m. from Ijmal. *Vide* tauzi No. $\frac{2075}{21}$ for the shares excluded from sale.				
2249	Bhararl, pargana Chainpur.	750 0 0	Whole ...	..	Mandildas and others.	.....	164 8 0	.....
2680 Jt.	Kararl, pargana Chainpur.	1,050 10 8	.....	The Ijmali shares to be sold are as follows:— As. Auraiya Deo ... ... 16 Naroura ... ... 16 Ojhwalia ... ... 16 The share of Khata No. 1 in Kararl 16s. is excluded from sale.	R. Sant Prasad	530 2 2	.....	193 5 3
2905 Jt.	Umapur, pargana Chainpur.	5,942 6 4	.....	The ijmali share to be sold are:— As. P. K. Patti Lohang ... ... 5 6 10 Sarison ... ... 5 6 0 Chak Bhagwat ... ... 3 0 0 Umapur ... ... 1 3 0 Semaria ... ... 5 0 0 Harkatya ... ... 3 0 0 Sahijni ... ... 4 3 0 Chandrauli ... ... 16 0 0 Chaukhanda ... . 16 0 0 Kutbanpur ... ... 5 0 0 Doharpat Sarawa ... ... 3 0 0 Saria Belbhadarpur ... 3 9 0 Kishunpura ... ... 3 3 0 The following shares are excluded from sale:— Khata No. 1— As. P. K. Semaria ... ... 5 0 0 Khata No. 2— Rampur ... ... 7 4 0 Khata No. 3— Umapur ... . 1 6 0 Saria Belbhadarpur ... 1 6 0 Khata No. 4— Umapur ... . 3 0 0 Khata No. 5— Saria Belbhadarpur ... 2 9 0 Khata No. 6— Samahuta Narainpur ... 4 0 0 Khata No. 7— Sarsaun ... ... 7 6 0 Khata No. 8— Patti Lahang ... ... 1 6 0 Saria Belbhadarpur ... 0 3 0 Umapur ... ... 0 3 0 Khata No. 9— Garra ... ... 16 0 0 Mirga ... ... 16 0 0 Khata No. 10— Rampur ... ... 4 0 0 Khata No. 11— Rampur ... ... 6 8 0 Khata No. 12— Patti Lahang ... ... 0 9 0 Satwabishopur ... ... 4 0 0 Khata No. 13— Saria Belbhadarpur ... ... 2 6 0 Umapur ... ... 2 6 0 Khata No. 14— Kishunpura ... ... 5 0 0 Khata No. 15— Karmuhari ... ... 4 0 0 Murarpati ... ... 4 0 0 Khata No. 16— Umapur, Saria Belbhadarpur 2 6 0	Ramdeni Rai and others.	826 8 4	....	147 10 2

Tauzi No.	Name of mahal or pargana.	Sadar jama of the whole estate.	Whether the whole estate is to be sold.	If only a share is to be sold, specification of such share or shares.	Names of proprietors of property to be sold.	If only a share is to be sold, the sadar jama of such share.	If the whole estate is to be sold, the arrears due from it.	If only a share is to be sold, the arrears due from it.
1	2	3	4	5	6	7	8	9
2908/Jt.	Umapur, pargana Chainpur.	Rs. A. P. 5,948 6 4	.....	Khata No. 17— As. P. K. Sahijni ... ... 8 0 0 Turkaulia ... ... 16 0 0 Karmahri ... ... 8 0 0 Ghataya Jagatpur ... ... 16 0 0 Kildin ... ... 14 0 0 Harkataya ... ... 8 0 0 Pahera ... ... 16 0 0 Pattimurar ... ... 8 0 0 Semri Bahuan ... ... 16 0 0 Dohar Panserwa ... ... 8 0 0 Bhelma ... ... 16 0 0 Kutbanpur ... ... 8 0 0 Ghaghia ... ... 16 0 0 Tekari ... ... 16 0 0 Khata No. 18— Damadarpur ... ... 16 0 0 Kilndi ... ... 2 0 0 Chak Bhagwat ... ... 8 0 0 Khata No. 19— Saria Belbhadarpur ... ... 2 3 0 Khata No. 20— Karmahari ... ... 4 0 0 Murarpatti ... ... 4 0 0 Khata No. 21— Sahijni ... ... 3 9 0 Khata No. 22— Kasthar ... ... 16 0 0 Khata No. 23— Satwa Bishopur ... ... 6 4 0 Khata No. 24— Kishunpura ... ... 3 0 Khata No. 25— Kishunpura .. .. 1 0 0 Khata No. 26— Kishunpura ... ... 0 6 0 Khata No. 27— Samahuta Narainpur ... 8 0 0 Khata No. 28— Samahuta Narainpur ... 4 0 0 Khata No. 29— Kishunpura ... ... 2 0 0 Khata No. 30— Lahangpatti ... ... 7 5 10 Khata No. 31— Satwa Bishopur ... ... 1 8 0 Khata No. 32— Satwa Bishopur ... ... 4 0 0 Lahangpatti ... ... 0 9 0 Saria Belbhadarpur ... ... 0 6 0 Khata No. 33— Ahinaura 16 0 0		Rs. A. P.	Rs. A. P.	Rs. A. P.
5989/1	Telari, pargana Sasaram.	801 1 1	.....	The share of khata No. 1 to be sold is 16 annas in Telari and Phulwaria. The share of Ijmal and khata No. 2 will also be sold. The share of khata No. 3, 7 annas, is excluded from sale.	Brijmohan La. and others.	533 5 4	.....	18 6 5
8196	Towfir, Makdumpur Semra, pargana Baraligawan.	5,672 6 3	Whole ...	.....	Ram Rajendra Deonarain.	.....	10,305 12 10	.....
9582	Banarpur, pargana Chousa.	540 2 11	Do. ...	.....	Santram Tewari and others.	.....	4 1 9	.....

Arrah, the 6th May 1905.

G. MILNE, Offg. Collector.

Notification A.

NOTICE is hereby given, under sections 6 and 13, Act XI of 1859, that the undermentioned estates and shares of estates in the district of Midnapore will be put up for sale at the office of the Collector of that district on the 27th June 1905 at 12 o'clock for arrears of revenue and other demands which by law are realizable as arrears of land revenue.

When in columns 5, 7 and 9 of the appended statement it is stated that only a share is to be sold, it is to be understood that a separate account is kept for that share.

Tauzi No.	Name of mahal and pargana.	Sadar jama of whole estate.	Whether the whole estate is to be sold.	If only a share is to be sold, specification of such share or shares.	Names of proprietors of property to be sold.	If only a share is to be sold, the sadar jama of such share.	If the whole estate is to be sold, the arrears due from it.	If only a share is to be sold, the arrears due from it.
1	2	3	4	5	6	7	8	9
		Rs. A. P.				Rs. A. P.	Rs. A. P.	Rs. A. P.
275	Pargana tappa Baligita, mahal Bhitorebinode, 4 annas' share.	1,658 14 9	...	Residuary share, excluding separate account No. I—10a. 13g. 1k. 1kt. share of the mahal. All other shares than that specified will be excluded from sale.	Chowdry Gopendra Nundan Das Mahapatra.	1,105 15 3	.....	518 3 6
312	Pargana Batitaki, mahal Palgeria.	630 1	Entire ...	.....	Mohendra Nath Pal, sebait of Lukshmi Janardan Jew.		290 7 0	.....
380	Pargana Bhuniamutta, mahal Haripore *alias* Banamalipore.	920 13 8	.....	Residuary share, excluding separate account No. I—16a 4g. share of the mahal. All other shares than that specified above will be excluded from sale.	Kripasindoo Mamanta and others.	874 12 8	.....	378 0 0
535	Pargana Chetua, mahal Dubrajpore.	3,406 10 1	.....	Separate account No. I—8a. share of the mahal. All other shares than that specified above will be excluded from sale	Sreemati Mangala Dasi and others.	1,704 4 11	.....	356 13
535	Ditto ...	3,406 10 1	.....	Separate account No. III—3a. share of the mahal. All other shares than that specified above will be excluded from sale.	Jotindra Nath Sing and others.	636 1 11	.....	219 11 10
588	Pargana Dakhinmal, mahal Haripore.	6,769 1 5	.....	Separate account No. II—8a. share of the mahal. All other shares than that specified will be excluded from sale.	Haripriya Debi	3,384 5 9	.....	1,460 8 3
739	Pargana Egrachore, mahal Bhatda.	3,613 6 4	.....	Residuary share, excluding separate accounts Nos. 3, 4, and 10 to 24— As. G. K. KT. Mauza Baria *alias* Jharia ... 16 0 0 0 M. Gopinathpore ... 16 0 0 0 M. Karakpara ... 16 0 0 0 M. Miragapore ... 16 0 0 0 M. Naraharipore 16 0 0 0 M. Sundarpore 16 0 0 0 M. Mallikpore ... 0 3½ 0 0 M. Mahanagore 0 3½ 0 0 M. Jagannathpore ... ... 5 6 2 2 As. G. KG. TIL. M. Kamardiha ... 3 9 9 18 K. M. Dabeta *alias* kist Dambeta 1 15 2 16 KS. M. Nohipore ... 2 11 6 14 M. Tetulmari ... 12 0 0 0 M. Bhatda ... 8 11 6 3 1 K. M. Gonipore ... 3 0 0 0 M. Narainbar 16 0 0 0 All other shares than that specified above will be excluded from sale.	Chowdry Gopendra Nundan Das Mahapatra.	1,311 8 0	.....	203 8
860	Pargana Kalindibalasi, mahal Chaddahasari.	2,278 11 0	.....	Separate account No. III—8a. share of the mahal. All other shares than that specified above will be excluded from sale.	Haripriya Debi	1,139 5 6	.....	497 3 4
907	Pargana Kasijora, mahal Bazilola *alias* Deulbar.	1,550 4 0	.....	Residuary share, excluding separate account No. I—14a. 10g. share of the mahal. All other shares than that specified will be excluded from sale.	Syed Aftauddig Ahmed	1,366 12 7	.....	650 7 0, January and March 1906.
921	Pargana Kasijora, mahal Chakdaha *alias* Radhaballuvchak.	9,185 8 0, including police.	...	Separate account No. 4—4a. 5g. share of the mahal. All other shares than that specified will be excluded from sale.	Ashutosh Chatterjee and others.	2,430 14 3, including police.	.....	1,141 13 10, including police.
921	Ditto ...	9,185 8 0, including police.	.....	Separate account No. 6—1a. 15g. share of the mahal. All other shares than that specified will be excluded from sale.	Ditto ...	1,004 10 7, including police.	.....	469 5 10, including police.

Touzi No.	Name of mahal and pargana.	Sadar jama of whole estate.	Whether the whole estate is to be sold.	If only a share is to be sold, specification of such share or shares.	Names of proprietors of property to be sold.	If only a share, a to be sold, the sadar jama of such share.	If the whole estate is to be sold, the arrears due from it.	If only a share is to be sold, the arrears due from it.
1	2	3	4	5	6	7	8	9
		Rs. A. P.				Rs. A. P.	Rs. A. P.	Rs. A. P.
937	Pargana Kasijora, mahal Gurparusattampore *alias* Chaitnyapore.	738 10 8	.....	Residuary share, excluding separate accounts Nos. 1 and 2—12a. 16g. share of the mahal. All other shares than that specified will be excluded from sale.	Ganganarain Maity and others.	800 14 8	.....	250 8 11, January and March 1905.
972	Pargana Kasijora, mahal Kedalia.	1,450 14 1	Entire ...	.....	Debendra Nundan Das Mahapatra.	.....	8 13 10	.....
1057	Pargana Kasijora kist, mahal Manur.	2,290 6 10	Do.	.....	Damudar Das Barman, sabait of Samaljew Tagore.	.....	1,046 13 6	.....
1660	Pargana Khandar, mahal Panchpara.	4,053 11 5	.....	Separate account No. I— Mauza Abdulla— M. Aroon. M. Aroon chak. M. Fateh chak. M. Gokulpore. M. Jamunda. M. Kamal chak. M. Monohar chak. M. Pal Gokul. M. Rank chak. M. Ranihati. M. Rai chak. M. Rinode chak. M. Madhu Sudan chak. M. Pithai chak. Eight annas' share of all the above mauzas. All other shares than that specified will be excluded from sale.	Krishna Chandra Kar and others.	682 5 6	.....	293 7 3
1731	Pargana Moynachore, mahal Ankapurba.	1,601 7 3	.....	Residuary share, excluding separate account No. I—8a. share of the mahal. All other shares than that specified will be excluded from sale.	Ganganarain Maity ...	800 11 7	.....	235 15 0
1905	Pargana Narainqurkist, mahal Kheiar *alias* Bompatua.	3,418 1 7	.....	Residuary share, excluding separate accounts Nos. 1 to 4— A. G. K. KT. Mauza Alichak 5 6 2 2 M. Baksuteg 10 13 1 1 M. Balaram Chaita. 16 0 0 0 M. Banpatna ... 16 0 0 0 M. Begheria ... 16 0 0 0 M. Baligera ... 16 0 0 0 M. Benaparadihi 16 0 0 0 M. Brambanibheria. 10 13 1 1 M. Kalikachuk ... 5 6 2 2 M. Kuchaibhafluk 16 0 0 0 M. Khalaridihi ... 16 0 0 0 M. Khatrageria chak. 10 13 1 1 M. Lahabaranchak. 10 13 1 1 M. Madhuchak ... 5 6 2 2 M. Mandalgacia 5 6 2 2 M. Madhabchak 5 6 2 2 M. Nischindipur 16 0 0 0 M. Lekrageria ... 5 6 2 2 M. Parijatnagar 16 0 0 0 M. Punjachotta 5 6 2 2 M. Purusattamchak. 16 0 0 0 M. Prempura ... 16 0 0 0 M. Raghunathpore. 16 0 0 0 M. Rajpore ... 16 0 0 0 M. Satrughanbar 5 6 2 2 M. Sawtalchak ... 5 6 2 2 M. Sekharpari ... 16 0 0 0 M. Taifra ... 10 13 1 1 M. Uechabanudabar. 5 6 2 2 M. Bhagabanpore 16 0 0 0 M. Chaita ... 16 0 0 0 M. Deulbar ... 5 6 2 2 M. Harachak ... 5 6 2 2 M. Hiraparse ... 10 13 1 1 M. Hiraparsechak. 10 13 1 1 M. Koitpore ... 5 6 2 2 M. Kaimkhan ... 10 13 1 1 M. Kaimkhanchak. 10 13 1 1 M. Kalidasbhera 10 13 1 1 All other shares than that specified will be excluded from sale.	Chowdry Krishna Chandra Das Mahapatra and others.	2,441 1 2	.....	338 13 5, January and March 1905.
2247	Pargana Sabong, mahal Motar.	1,445 9 0	Entire ...	.....	Sarat Chandra Jana and others.	.....	679 8 0	.....
1487	Pargana Shahapore, mahal Hasimpore.	1,614 2 10, including police.	Do. ...	.....	Sarat Chandra Singha-Chowdery.	.....	190 11 4 Land revenue.	.....
2077	Pargana Shipore, mahal Legua.	2,619 5 3	.....	Separate account No. 22— A. G. K. Mauza Akbar. 10 0 5 M. Aulda ... ... 7 0 3 M. Baraatia ... ... 10 0 3 M. Bohalia ... ... 10 0 3 M. Khagda ... ... 10 0 3 M. Khurutia ... 10 0 3 M. Modekool ... 10 0 3	Srimati Tilottoma Debi, mother and guardian of Chow. Narendra Nath Pahari, minor.	1,376 13	.....	639 7 1

Tauzi No.	Name of mahal and pargana.	Sadar jama of whole estate.	Whether the whole estate is to be sold.	If only a share is to be sold, specification of such share or shares.	Names of proprietors of property to be sold.	If only a share is to be sold, the sadar jama of such share.	If the whole estate is to be sold, the arrears due from it.	If only a share is to be sold, the arrears due from it.
1	2	3	4	5	6	7	8	9
		Rs. A. P.		A. G. K. KG. M. Madhab Chandra Chak .. 10 0 3 0 M. Logura ... 6 1 3 0 M. Pansrul ... 3 10 0 6 M. Naghat Khanda 10 0 3 0 M. Shiporebar ... 10 0 3 0 M. Takapara ... 10 0 3 0 M. Gopalpore ... 6 1 3 0 M. Jagunia ... 10 0 3 0 M. Kanongobar . 3 10 0 6 M. Kanooprojapati kist .. 3 10 0 6 M. Kuarpore ... 10 0 3 0 M. Krishnapore 10 0 3 0 M. Brindabanpore 7 0 3 0 M. Chaulda ... 6 1 3 0 M. Dubda ... 10 0 3 0 M. Dubdabati taki 10 0 3 0 M. Dhusurda ... 7 0 3 0 M. Gobrachak ... 10 0 3 0 M. Godaychak ... 7 0 3 0 All other shares than that specified will be excluded from sale.			Rs. A. P.	
				Part II.				
2717	Pargana Jalamutta, mahal Keoramal Erinch Bisuan, Baindabazar Jalpai.	3,360 14 2	Entire ...	.....	Sreemati Haripriya Debi	.....	1,575 5 8	.....
2876	Pargana Potaspore, mahal Dehatgokulpore.	28,049 0 0	Do. ...	.. ..	Chowdry Gopendra Nundan Das Mahapatra.		22,789 13 0, January and March 1905.	.....
				Part III.				
2004	Pargana taraf Bisuan, mahal Garahar, &c., bajapti No. 147.	814 0 0	Entire ...	.. ..	Panchanon Mirdhya	... ..	263 6 0	..... Malgujari right will be sold.

Midnapore, the May 1905. J. N. ROY, Covd. Deputy Collector in charge.

Notification B.

NOTICE is hereby given under section 5, Act XI of 1859, that unless the arrears mentioned below are paid on or before the next latest date of payment, viz., the 28th June 1905, the undermentioned estates or shares of estates in the district of Midnapore will be put up for sale at the office of the Collector of that district on the 30th June 1905, at 12 o'clock noon for the said arrears.

When in columns 5, 7 and 9 of the appended statement it is stated that only a share is to be sold, it is to be understood that a separate account is kept for that share, and that the other share or shares in the estate are excluded from the sale.

Tauzi No.	Name of mahal and pargana.	Sadar jama of the whole estate.	Whether the whole estate is to be sold.	If only a share is to be sold, specification of such share or shares.	Names of proprietors of property to be sold.	If only a share is to be sold, the sadar jama of such share.	If the whole estate is to be sold, the arrears due from it.	If only a share is to be sold, the arrears due from it.	Nature and amount of demand for which to be sold.
1	2	3	4	5	6	7	8	9	10
		Rs. A. P.				Rs. A. P.	Rs. A. P.	Rs. A. P.	Rs. A. P.
478	Pargana Chandrakona, mahal Kuldaha.	10,784 7 2	.....	Separate account No. I, 4a. 5g. 1ch. 1k. share of the mahal. All other shares than that specified will be excluded from sale.	Paran Ch. Ray and others.	2,875 13 8		144 9 0	Revenue— 144 9 0
944	Pargana Kasijora, mahal Gumukpota.	3,185 0 0 including police.	... ..	Separate account No I. 8 annas share of the mahal. All other shares than that specified will be excluded from sale.	Munimuhun Ray ...	1,593 8 0 including police.	.....	748 2 0 including police.	Revenue— 742 8 0 Police— 5 10 0 Cess— 48 15 9 Embankment— 84 0 0
2263	Pargana Sabong, mahal Palpara.	733 3 6	Entire ...	.....	Stya. Tarangini Dasi and others.	... ..	171 13 6 January and March 1905.	.....	Revenue— 171 13 6 Cess— 18 14 6

Midnapore Collectorate, the May 1905. J. N. ROY, Covtd. Deputy Collector in charge.

Notice of Sale.

NOTICE is hereby given, under sections 6 and 13 of Act XI of 1859, that the undermentioned estates and shares of estates in the district of 24-Parganas will be put up for sale at the office of the Collector of that district on the 27th June 1905 at 12 o'clock noon for arrears of revenue and other demands which by law are realizable as arrears of land revenue.

When in columns 5, 7 and 9 of the appended statement it is stated that only a share is to be sold, it is to be understood that a separate account is kept for that share and that other share or shares are excluded from sale.

Consecutive No.	Tauzi No.	Name of pargana and mahal.	Sadar jama of the whole estate.	Whether the whole estate is to be sold.	If only a share is to be sold, the specification of such share.	Names of proprietors of the properties to be sold.	If only a share is to be sold, the sadar jama of such share.	If the whole estate is to be sold, the arrears due from it.	If only a share is to be sold, the arrears due from it.
1	2	3	4	5	6	7	8	9	10
			Rs. A. P.				Rs. A. P.	Rs. A. P.	Rs. A. P.
1	1	Magura, Chetla and others.	5,422 9 3	.....	15a. 15g. 3k. 1kr. 8t. of the entire estate minus 8a. in each of the mauzas as Srirampore, Raghirghole and Rajeb Molla's Chak.	Kali Chandra Roy Choudhury and others.	1,161 9 10½	.....	537 10 4
2	2	Magura, kismat Kangonberia and others.	2,828 15 2½	.....	4a. 5g. 2k. 5½d. of the entire estate minus 4a. 5g. 2k. 5½d. of mauzas Chetla and Alipore.	Kali Niharan Roy Choudhury.	738 11 11½	.....	253 14 3½
3	3-1	Magura, Laskarpore and others.	8,389 12 6½	.....	6a. share, excluding 10a. of the entire estate.	Bindoobashini and Gonesh Jononi Debi guardian of Rajendro Kumar Roy Choudhury.	3,106 10 7½	.....	1,212 6 8½
4	3-1	Magura, kismat Joolpia and others.	3,493 1 3	....	Excluding 10a., remaining 6a. share.	Ditto ...	1,307 7 9½	..	471 1 10½
5	9	Magura, kismat Chetla and others.	810 0 6½	Whole ..	.....	Surendro Nath Roy and others.		156 11 1½	.....
6	10	Ditto ...	809 10 1½	Do. ...	.....	Ram Kali Roy Choudhury and others.	.....	96 4 0	.....
7	13	Ditto ...	810 11 3½	Do. ...	.. ..	Mohit Kali Debi and others.	.. .	196 5 11½	.. ....
8	15	Magura, kismat Kharibera and others.	4,078 14 11½		Excluding 3a., remaining 13a. share.	Kali Shohai Roy Choudhury and others.	3,812 13 8½	.....	976 8 0½
9	15-1	Ditto ...	4,078 14 11½	. ....	Excluding 13a., remaining 3a. share.	Kali Podo Roy Choudhury.	766 1 3	.....	266 1 0
10	53	Magura, kismat Ramcawarpur and others.	3,196 1 2		Residuary share, i.e., entire estate minus shares composed in the separate account Nos. 1 to 9.	Dwija Das Bhaduri, Manager, Court of Wards, and another.	2,102 1 0½	.	551 10 4
11	56	Magura, kismat Srirampore.	3,126 5 7½	.....	Excluding 1a. 15g. 2k. 2d., remaining 14a. 4g. 1k. 2kr. 1d.	Kristo Prosonno Mondal and others.	2,778 15 8½	.	990 5 7½
12	85	Magura, kismat Abgachia and others.	984 14 7	.....	The whole estate minus 7a. share in mauza Chak Kantalia, and 2a. 1g. 2k. share in each of the mauzas kismat Babanpur and Noma.	Trailakhya Nath Barui	861 11 10	.....	289 4 2
13	120	Bandhati, kismat Kadalia and others.	5,098 5 2½	Whole ...	.....	Harihar Chatterjee ...	.....	1,845 13 1½	.....
14	152	Khaspore, Srirampore and others.	703 8 8	.....	14a. 4g. 1k. 2kt. 7d. share, excluding 1a. 15g. 1k 1kr. 2d.	Kristo Prosonno Mondle and others.	615 5 11	.....	136 3 9
15	230	Khaspore, Dhakuria and others.	1,066 11 10		16a. share minus 1a. 15g. 2k. 2d. share in each of the mauzas Goria and Berju.	Sarat Kumari Dasi and others.	1,046 10 9	.....	60 2 9
16	250-9	Midanmolla, Barulpore and others.	38,630 2 27	.....	1a. 11g. 4d. share, excluding 14a. 5g. 3k. 5d. share.	Jotindro Kumar Roy Choudhury.	5,115 12 7	.....	128 13 8
17	251	Medan Molla, Rajpur and others	1,075 3 2½		11a. 1g. 1kr. 1d. share, excluding 4a. 8g. 3k. 1kr. 2d. share,	Kedar Nath Roy Choudhury and others.	776 7 10	..	88 13 7½
18	253	Pargana Mudan Molla, Kharampara and others.	1,079 3 6	.....	11a. 11g. 7kr. 1d. share, excluding 4a. 8g. 3k. 1kr. 2d.	Kedarnath Roy Choudhury and others.	779 7 0		46 2 2
19	314	Muragacha, Harinarainpore and others.	12,200 12 6½	1	7a. 11g. 2k. 2kg. 13t, 1k. share of the entire estate.	Banki Behari Mandal and others.	5,747 4 5	.....	583 7 8½
20	315-1	Muragacha, Roghunathpore and others.	10,239 15 6	.....	1½g. 3k. share, excluding 15a. 1g. 1k. share.	Kristo Prasanna Mandal and others.	899 6 7½	.....	188 3 10½
21	315-3	Ditto ...	10,239 15 6		Excluding 13a. 12g. 2k 2kr. 2d. share, remaining 2a. 1k. 1d. share.	Goni Kisore Mandal and others.	1,287 9 11½	.....	676 1 11½
22	315-11	Ditto ...	10,229 15 6	.....	Excluding 14a. 17g. 2k. share, remaining 1a. 2g. 2k. share.	Apurba Kumari Dasi ...	719 4 9	.....	375 13 10
23	326	Muragacha Bistoopore and others.	2,443 3 0	.....	Excluding 15a. 12g. share, remaining 4g. share.	Jotindra Nath Roy Choudhury and others.	1,212 3 3½	.....	635 14 2
24	327-1	Muragacha, Dharapara and others.	1,064 7 4	... ..	Ditto	Uma Prosad Ghose ...	532 3 3	.....	263 14 10
25	346	Bella Santoshbati and others.	5,631 0 9		Excluding 2a. 13g. 3k. 2kr. 2d., remaining 13a. 6g. 1kr. 1d. share.	Brojendranath Mandal and others.	4,506 15 4	.....	336 3 1
26	365	Azimabad Hudarsh bhali and others.	19,434 3 0	.....	In each of the mauzas except Khakramari 15g. share.	Gopikisore Mandal and others.	900 2 7½	.....	514 5 11
27	365-1	Ditto ...	19,434 3 0	...	Ditto 1a. 2g. 2k. share ...	Nobokisore Mandal and others.	1,385 12 7	..	382 0 9
28	365-4	Ditto ...	19,434 3 0	... .	Excluding 15a. 4g. 2k. 2kr. remaining 15g. 1k. 1kr. share.	Brojendra Nath Mandal	928. 3 7½	.....	518 12
29	365-5	Ditto ...	19,434 3 0	.....	1a 1g. 2k. 1d. share of the entire estate.	Gopi Kissore Mandal and others.	1,305 10 7½	.....	728 15
30	365-6	Ditto ...	19,434 3 0	.....	Excluding 15a. 4g. 2k 2kr., remaining 15g. 1k. 1kr. share.	Kristo Prosanna Mandal	928 3 7½	.....	518 12
31	365-9	Ditto ...	19,434 3 0	.....	Excluding 14a. 17g. 2k., remaining 1a. 2g. 2k. share.	Apurba Kumari Dasi ...	1,363 3 7½	.....	761 11 5
32	365-10	Ditto ...	19,434 3 0	.....	Excluding 15a. 4g. 2k. 2kr., remaining 15g. 1k. 1kr. share.	Sarat Kumari Dasi ..	928 3 7½		259 3 1
33	365-11	Ditto ...	19,434 3 0	.....	In all the mauzas except mauza Khagramori 15g 1k. 1kr. share.	Kalidas Adak and others.	807 6 10	.....	224 10 1
34	365-12	Ditto ...	19,434 3 0	.....	Excluding 15a. 1½g. share remaining 10g. share.	Nobokisore Mandal and others.	606 9 5	.....	338 3
35	365-14	Ditto ...	19,434 3 0	.....	Excluding 15a. 8g., remaining 15g. share.	Chandi Charan Mandal and others.	908 6 1	.....	507 13
36	366-1	Bella Moloyapore and others.	8,236 9 0	... .	Excluding 14a. 17g. 2k., remaining 1a. 2g. 2k. share.	Nobokisore Mandal and others.	585 3. 2½	.....	160 3 1
37	366-3	Ditto ...	8,236 9 0	.. ...	Excluding 14a. 18g. 1k. 2kr. 2d., remaining 1a. 1g. 2k. 1d. share.	Gopi Kissore Mandal and others.	540 3 4½	.....	183 14
38	369-1	Bella Santoshpore and others.	9,491 5 10	.....	Excluding 14a. 17g 2k., remaining 1a. 2g: 2k share.	Radha Binod Mandal and others	663 5 10½	.....	171 7
39	369-4	Ditto ...	9,491 5 10	.	Excluding 14a 18g. 1k. 2kr. 2d., remaining 1a. 1g. 2k. 1d. share.	Gopi Kissore Mandal and others.	614 11 3½	.....	176 12

Consecutive No.	Tauzi No.	Name of pargana and mahal.	Sadar jama of the whole estate.	Whether the whole estate is to be sold.	If only a share is to be sold, the specification of such share	Names of proprietors of the properties to be sold.	If only a share is to be sold, the sadar jama of such share.	If the whole estate is to be sold, the arrears due from it.	If only a share is to be sold, the arrears due from it.
1	2	3	4	5	6	7	8	9	
			Rs. A. P.				Rs. A. P.	Rs. A. P.	Rs. A. P.
40	389-12	Balia, Santoshpur and others.	9,401 5 10	.....	Excluding 14a. 17g. 2k., remaining 1a. 2g. 2k. share.	Apurba Kumari Dasi	663 5 11	.....	342 14 4
41	391-5	Muragacha, Gomukhi, and others.	8,856 8 6	.....	Excluding 18a. 10g. 2k. 2kr., 2d., remaining 2a. 1k. 1d. share.	Gopikisor Mandal and others.	697 2 0	.....	229 0 11
42	391-6	Ditto	5,188 8 6	.....	Excluding 14a. 6g. 2k. 2kr. remaining 1a. 13g. 1k. 1kr. share.	Kshirodamayee Dasi, widow of late Sashi Bhusan Biswas.	576 14 11	.....	157 15 2
43	392	Azimabad, Huda Joychandipur.	8,313 7 8	.....	Excluding 13a. 6g. 2k. 2kr., remaining 2a. 18g. 1k. kr. share.	Nabakisor Mandal and others.	1,385 9 2	.....	558 7 8½
44	392-1	Ditto	8,313 7 8	.....	Excluding 12a. share, remaining 4a. share.	Radhabinod Mandal and others.	2,078 5 11	.....	1,544 15 1
45	392-3	Ditto	8,313 7 8	.....	Excluding 13a. 6g. 2k. 2kr., remaining 2a. 18g. 1k. 1kr. share.	Chandi Charan Mandal and others.	1,385 9 4	.....	558 10 0
46	392-4	Ditto	8,313 7 8	.....	Ditto Ditto ...	Nabakisor Mandal and others.	1,385 9 4	.....	558 9 11
47	394-6	Azimabad, taraf Kisorepore.	7,106 12 11	.....	Excluding 14a. 6g. 2k. 2kr., remaining 1a. 13g. 1k. 1kr. share.	Srimaty Kshirodamoyi Dasi.	740 8 1	.....	154 7 9
48	396	Azimabad, taraf Madhabpore.	14,657 13 11	.....	Excluding 6a., remaining 10a. share.	Balkuntha Nath Dey, and others.	9,161 2 8	.....	2453 9 4
49	396-1	Ditto ...	14,657 13 11	.....	Excluding 10a., remaining 6a. share.	Srimati Kiron Sashi Dasi, guardian of Kamal Kristo and Hata Kristo Mandal.	5,496 11 3	.....	2,453 8 8
50	400	Balia Ramchandrapur and others.	747 11 1	Whole ...	..	Radha Mohan Mandal...	.....	235 7 3	.....
51	401-6	Azimabad Huda Ramkristapur and others.	8,941 9 7	.....	Excluding 14a. 14g. 2kr., remaining 1a. 5g. 3k. 1kr. share.	Gopi Kisore Mandal and others.	731 13 6½	.....	130 0 10½
52	401-7	Ditto ...	8,941 9 7	.....	Excluding 14a. 17g. 2k., remaining 1a. 2g. 2k. share.	Krista Lal Mandal and others.	628 11 3½	.....	33 4 4
53	401-11	Ditto ...	8,941 9 7	.....	Ditto ditto ...	Apurba Kumari Dasi...	628 11 3½	..	284 15 10½
54	403	Azimabad, taraf Patharbaria, and others.	5,143 3 3	.....	Excluding 9a. 14g. 2k. 2kr., remaining 6a. 5g. 1k 1kr. share.	Banka Behari Mandal and others.	2,014 6 6½	.....	351 11 5½
55	403-2	Ditto ...	5,143 3 3	.....	Excluding 9a 6g. 2k. 2kr., remaining 6a. 13g. 1k. 1kr. share.	Kshiroda Mayee Dasi, widow of Sashi Bhusan Biswas.	2,143 15 11	.....	418 4 5
56	411	Magura, kismat Dharmakhola and others.	2,518 5 7	Whole ..	.....	Manilal Banerjea ...	.....	758 5 5	... .
57	1147	Modanmolla Komalpore and others.	1,082 10 3	.....	Excluding 4a. 8g. 3k. 1kr. 2d., remaining 11a. 11g. 1kr. 1d. share.	Durgadas Roy Chowdhury and others.	781 13 7	.....	33 13 1

24-Pargenas Collectorate, Alipore, the 22nd May 1905. J. H. BERNARD, Collector.

Notification A of sale.

NOTICE is hereby given, under sections 6 and 13, Act XI of 1859, that the undermentioned estates and shares of estates in the district of Rangpur will be put up for sale at the office of the Collector of that district on the 22nd June 1905, at 12 noon, for arrears of revenue and other demands, which by law are realizable as arrears of land revenue.

Tauzi No.	Name of mahal and pargana.	Sadar jama of whole estate.	Whether the whole estate is to be sold.	If only a share is to be sold, specification of such share or shares.	Names of proprietors of property to be sold.	If only a share is to be sold, the sadar jama of such share.	If the whole estate is to be sold, the arrears due from it	If only a share is to be sold, the arrears due from it.
1	2	3	4	5	6	7	8	9
169	Kundi, pargana Kundi, 7 annas.	Rs. A. P. 19,673 10 3	No ...	The separate account bearing No. 163-1 comprising 16 annas of each of the mauzas Barabari Raghu, Rudha, Gobardhan, Ghose Raghab, Jayram, Lakshan Kismat chhota, Rajaram, Shaja Pukhari, Digultari, Kashichak, Khalia, Lalu Kismat, Sobandighi, Purandar Kashinathpur, and Khaloya kismat and 8 annas share of each of the mauzas Fatehpur, Gopinathpur, Jinahar, Krishnapur, Ranipur, Sripur alias Srichendra Barakali Jama and Khalia.	Nabin Kishori Chaudhurani and others.	Rs. A. P. 1,471 1 11	.....	Rs. A. P. 184 3 1

NOTE.—All other shares besides that specified will be excluded from the sale.

Rangpur, the 28th April 1905. T. EMERSON, Collector.

Notification A.

NOTICE is hereby given, under sections 6 and 13, Act XI of 1859, that the undermentioned estates and shares of estates in the district of Saran will be put up for sale at the office of the Collector of that district on the 5th June 1905 at 6-30 A.M. (Monday), corresponding to 18th Jesth 1312 Fasli, for arrears of revenue and other demands, which by law are realizable as arrears of land revenue.

When in columns 5, 7 and 9 of the appended statement it is stated that only a share is to be sold, it is to be understood that a separate account is kept for that share.

Tauzi No.	Name of mahal and pargana.	Sadar jama of whole estate.	Whether the whole estate is to be sold	If only a share is to be sold, specification of such share or shares.	Names of proprietors of property to be sold.	If only a share is to be sold, the sadar jama of such share.	If the whole estate is to be sold, the arrears due from it.	If only a share is to be sold, the arrears due from it.
1	2	3	4	5	6	7	8	9
		Rs. A. P.				Rs. A. P.	Rs. A. P.	Rs. A. P.
394	Benout, pargana Bal.	883 15 9	.....	Ijmali— As Benout ... ... 8 Masihantola ... ... 8 Rampur .. .. 16 Birti Mehdar Bhodour ... ... 8 All other shares besides those specified will be excluded from the sale.	Ramdim Pandey and others.	543 13 8		134 13 11
1216	Harihans, pargana Bara.	1,061 8 6	.....	Ijmali— Ar. P. K. M. D. Kharsanda .. 9 1 17 13 5 Fazilpur ... ... 8 0 0 0 0 Bindawol .. ... 16 0 0 0 0 Balli ... ... 10 8 0 0 0 Dhankhar ... ... 16 0 0 0 0 Harihans ... ... 16 0 0 0 0 Khanpur Kharanti ... 10 8 0 0 0 Sarya ... ... 10 8 0 0 0 All other shares besides those specified will be excluded from the sale.	Juthan Lall and others.	808 2 6	.....	46 8 0
				Part II.—Temporarily-settled estates.				
1808	Deara Khalpura Kamal, pargana Chirand.	536 0 0	Entire	.....	Parma Singh, on behalf of Rama Singh, sale purchaser.	.....	301 8 0	.....
				Part I.—Permanently-settled estates.				
2462	Kerwa Kotsa, pargana Goa.	3,124 6 8	.....	Ijmali— As. P. K. M. D. Rampur Atouli 5 3 0 0 0 Siswa ... ... 5 4 4 3 5 Agahra ... ... 9 2 5 0 0 Galimapur ... 8 6 7 10 0 Parsa ... 6 1 10 0 0 Bajrahia . .. 7 10 10 0 0 Kolsa, Keshapur, Milki 7 3 16 15 0 Usri ... . 1 0 3 15 0 Sarya Basaut ... 1 1 10 0 0 Faridpur ... 3 11 5 0 0 Chapra Mahesh ... 5 5 5 0 0 Dawan Godna ... ... 6 5 5 0 0 Fatehpur .. ... 7 5 5 0 0 Akolhi .. .. . 7 5 5 0 0 Chowrasi ... ... 7 5 5 0 0 Ardewa ... ... 10 6 0 0 0 Ghurua ... ... 10 6 0 0 0 All other shares besides those mentioned will be excluded from sale.	Durga Prosad Singh and others	864 13 2	.....	106 15 7
2718	Rasulpur, pargana Goa.	1,286 6 5		Ijmali— As. P. K. M. D. KG. Kareya Hat ... 3 10 6 7 4 0 Semri ... ... 8 5 15 6 4 12 Khajuhota ... ... 16 0 0 0 0 0 Godhna Dowan ... 9 7 4 0 0 0 Dhanawa ... ... 9 2 1 15 0 0 Khanpur . ... 16 0 0 0 0 0 Rasulpur ... ... 5 3 2 15 0 0 Rahimpur ... ... 5 3 2 15 0 0 Talwar ... ... 4 5 0 13 0 0 Datra Pursauni 16 0 0 0 0 0 Jalalpur .. ... 10 0 0 0 0 0 Besambherpur Gyosdih . ... 12 4 6 13 5 0 Negowa Busrug ... 8 9 12 0 0 0 Rampur ... 10 0 0 0 0 0 Koohwara ... ... 10 1 9 7 5 0 Jugdishpur ... 7 8 6 3 3 0 Nagwa Khurd ... 8 9 12 0 0 0 Manpur... ... 10 0 0 0 0 0 Akbarpur .. ... 16 0 0 0 0 0 Manjharia Jolkar ... 16 0 0 0 0 0 Kemari ... 16 0 0 0 0 0 Dhanamti, Sultanpur, Achalpur, Gagain, Jugdishpur 16 0 0 0 0 0 All other shares besides those mentioned will be excluded from sale.	Lil Baran Singh and others.	754 15 5	.....	49 14 8
2968	Basatpur Kareya or Basatpur, pargana Koswar.	2,486 2 8	Entire		Rai Jagdish Prasad and others.	.....	399 15 4	.....

Tauzi No.	Name of mahal and pargana.	Sadar jama of whole estate.	Whether the whole estate is to be sold.	If only a share is to be sold, specification of such share or shares.	Names of proprietors of property to be sold.	If only a share is to be sold, the sadar jama of such share.	If the whole estate is to be sold, the arrears due from it.	If only a share is to be sold, the arrears due from it.
1	2	3	4	5	6	7	8	9
		Rs. A. P.		As. P.		Rs. A. P.	Rs. A. P.	Rs. A. P.
3308/58	Amnour Mander, pargana Mahair.	7,432 10 8	.....	Separate account No. 58—	Raj Rajeshwari Kumar Singh.	2,811 9 10	.....	1,011 8 6
				Dharlabi Abhiman 16 0				
				Chapra Abhiman 16 0				
				Bolha 16 0				
				Firozpur 16 0				
				Paharpur 8 0				
				Sheikhpura 16 0				
				Parsarampur Gagendra ... 16 0				
				Monrosli 16 0				
				Kuodi Kharag 16 0				
				Parsa Harpur 8 0				
				Asrarpur 8 0				
				Sultanpur 16 0				
				Bankerwa Bhav 16 0				
				Kuodi Asam 8 0				
				Kuodi Peer 8 0				
				Bhagwanpur 16 0				
				Hankarpatti 5 4				
				Hosanpara 5 4				
				Bamnur Anant 8 0				
				Yar Mahamadpur 16 0				
				Bodua 13 0				
				Mangarpol Naran 8 0				
				Khushalpur 13 0				
				Murarchak 8 0				
				Bajahia 9 0				
				Ibrahimpur 16 0				
				Bhopatchak 8 0				
				Fakirchak 13 0				
				Mangarpal Murtaza 8 0				
				Karanpura 13 0				
				Jodopur 16 0				
				Kewatia 16 0				
				Rampur Jugdish 16 0				
				Manchitwa 16 0				
				Jugdishpur 16 0				
				Narsingh Bhanpur 16 0				
				Patti Mahamad or Mahamad Pati 16 0				
				Bajidpur 8 0				
				Khijirpur 16 0				
				Anjani 16 0				
				Patti Wali or Wali Patti ... 16 0				
				Itma 16 0				
				Binouta Makund 16 0				
				Patti Manjowna 5 4				
				Parsa Sahey 13 0				
				Bande Modsudan 16 0				
				Bak Sanda 16 0				
				Sarnoth Chak 16 0				
				Hariharpur Deonath 16 0				
				Pat Dharlabi Patu or Dokha Patu 13 0				
				Molha Chak 6 0				
				Manikchak 13 0				
				Porai 16 0				
				Akilpur 16 0				
				Bhow Chand Chak 16 0				
				Garib Chak 16 0				
				Hunkraha 16 0				
				Bhasana 16 0				
				Dharam Chak 16 0				
				Koithanlia *alias* Bothhandi ... 16 0				
				Salempur 4 0				
				Kaithanlia 16 0				
				Jadurampur 8 0				
				Chak Saleb *alias* Saleb Chak ... 16 0				
				Pipra 16 0				
				Ishak Chak 8 0				
				Jugdish Chak 13 0				
				Dharlabi Bhimal or Dharlabi 16 0				
				Mohan Chak 16 0				
				Chand Chak 16 0				
				Kolia 16 0				
				Madahi 1 0				
				All other shares besides those specified will be excluded from sale.				
3344	Nurhan Tole Babu Debi Prosad, pargana Nurhan.	1,309 7 0	Entire ...	...	Babu Debi Prosad, Babu Koilia Nand and Babu Gulab Chand and others.	.....	308 9 4	.....

Saran Collectorate, the May 1905.

BRAHMESHWAR PRASAD, *for* Collector.

Notification A.

NOTICE is hereby given, under sections 6 and 13, Act XI of 1859, that the undermentioned estates and shares of estates in the district of Patna will be put up for sale at the office of the Collector of that district on the 6th June 1905 at 10 A.M. for arrears of revenue and other demands which by law are realisable as arrears of land revenue.

When in columns 5, 7 and 9 of the appended statement it is stated that only a share is to be sold, it is to be understood that a separate account is kept for that share.

Tauzi No.	Name of mahal and pargana.	Sadar jama of whole estate.	Whether the whole estate is to be sold.	If only a share is to be sold, specification of such share or shares.	Names of proprietors of property to be sold.	If only a share is to be sold, the sadar jama of such share.	If the whole estate is to be sold, the arrears due from it.	If only a share is to be sold, the arrears due from it.
1	2	3	4	5	6	7	8	9
		Rs. A. P.				Rs. A. P.	Rs. A. P.	Rs. A. P.
6	Bahadurpur, pargana Bhimpur.	1,103 13 0	Entire ...	.....	Ram Narayan Singh Vogaira.	.....	344 13 0	.....
71	Bedhna Lashkaripur Bazurg Nisf, pargana Bhimpur.	1,038 0 0	Do. ...	.....	Babu Bishun Prosad Vogaira.	.....	130 0 6	.....
53/1	Bauri, pargana Teladha	1,066 10 8	.. ..	8 annas, separate account ... All other shares than that specified will be excluded from the sale.	Mussammat Umtul Kubra, herself and guardian of Khairun-nissa, minor.	533 5 4	.....	266 10 8
282	Deara Danapur Shah-sadpur, pargana Phulwari.	3,893 0 0	Entire ...	.....	Habib Khan, Gulab Chand Lal, Mahabir Sahu Vogaira.	..	3,531 5 2	.....
324/2	Narayanpur Amnar, pargana Teladha.	2,241 1 1	..	4 annas, separate account ... All other shares than that specified will be excluded from the sale.	Mussammat Kanchan Kuer, mother and guardian of Deo Nandan Prosad Singh.	560 4 4	.....	280 2 9
365	Gauspur Karwa, pargana Sanda.	640 8 7	Entire ...	.....	Lalji Singh	.....	6 11 4	.....
400	Ram Nagar Deara Muntaje, tauzi Deara Ram Nagar, pargana Ghyaspur.	2,133 5 4	... ...	9 annas and 16 dams, ijmal ... All other shares than that specified will be excluded from the sale.	Syed Mohamed Mehdi Hasan Khan, *alias* Padshah Nawab, Syed Akbar Ali Khan, *alias* Chhote Nawab Vogaira.	1,066 11 8	.....	124 5 3
413	Seranda Afzalpur Seranda, pargana Teladha.	816 0 0	Entire ...	.....	Syed Amir Kasim Vogaira.	.....	203 10 9	.....

The 8th May 1905.

H. C. WOODMAN, Collector of Patna.

Notification A.

NOTICE is hereby given, under sections 6 and 13, Act XI of 1859, that the undermentioned estates and shares of estates in the district of Bankura, will be put up for sale at the office of the Collector of that district on the 20th June at 12 A.M. for arrears of revenue and other demands, which by law are realisable as arrears of land revenue.

When in columns 5, 7 and 9 of the appended statement it is stated that only a share is to be sold, it is to be understood that a separate account is kept for that share.

Tauzi No.	Name of mahal and pargana.	Sadar jama of whole estate.	Whether the whole estate is to be sold.	If only a share is to be sold, specification of such share or shares.	Names of proprietors of property to be sold.	If only a share is to be sold, the sadar jama of such share.	If the whole estate is to be sold, the arrears due from it.	If only a share is to be sold, the arrears due from it.
1	2	3	4	5	6	7	8	9
6 Resi-dency.	Kuchiakole ...	Rs. A. P. 8,256 7 9	The whole estate will not be sold.	3a. 12g. 2k. 1kr. 15til share of the estate. All other shares besides that specified will be excluded from the sale.	Chandra Kumari Debya.	Rs. A. P. 1,378 11 6	Rs. A. P.	Rs. A. P. 641 6 6

Bankura Collectorate, the 13th May 1905.

R. KRISHNA DEB, Collector.

Supplementary Notification A.

NOTICE is hereby given under sections 6 and 13, Act XI of 1859, that the undermentioned estates and shares of estates in the district of Gaya will be put up for sale at the Office of the Collector of that district on the 6th June 1905, at 6 A.M., for arrears of revenue and other demands, which by law are realizable as arrears of land revenue:—

When in columns 5, 7 and 9 of the appended statement it is stated that only a share is to be sold, it is to be understood that a separate account is kept for that share.

Tauzi No.	Name of mahal and pargana.	Sadar jama of whole estate.	Whether the whole estate is to be sold.	If only a share is to be sold, specification of such share or shares.	Names of proprietors of property to be sold.	If only a share is to be sold, the sadar jama of such share.	If the whole estate is to be sold, the arrears due from it.	If only a share is to be sold, the arrears due from it.
1	2	3	4	5	6	7	8	9
		Rs. A. P.				Rs. A. P.		Rs. A. P.
1417	Barorah Vagairah, pargana Charkawan.	2,354 2 0	Nil	Separate account No. 8 consisting of— As. P. (1) Qarichak ... ... 9 4 (2) Mahmoodchak ... .. 9 4 (3) Jhaggerbigha ... 9 4 (4) Mohimali Bigha ... 9 4 (5) Salempore *alias* Rampore ... ... 9 4 (6) Chobra ... ... 9 4 (7) Bargaon 9 4	Mahammad Taqi and others.	950 0 0	Nil	12 9 0

Gaya Collectorate, the 12th May 1905.

SHAMSHUDDIN HAIDER, Deputy Collector.

Notification A.

NOTICE is hereby given under sections 6 and 13, Act XI of 1859, that the undermentioned estates and shares of estates in the district of Dacca will be put up for sale at the office of the Collector of that district on the 23rd June 1905 at 12 o'clock noon for arrears of revenue and other demands, which by law are realizable as arrears of land revenue:—

When in columns 5, 7 and 9 of the appended statement it is stated that only a share is to be sold, it is to be understood that a separate account is kept for that share, and that the other share or shares in the estate are excluded from the sale.

Tauzi No.	Name of mahal and pargana.	Sadar jama of whole estate.	Whether the whole estate is to be sold.	If only a share is to be sold, specification of such share or shares.	Names of proprietors of property to be sold.	If only a share is to be sold, the sadar jama of such share.	If the whole estate is to be sold, the arrears due from it.	If only a share is to be sold, the arrears due from it.
1	2	3	4	5	6	7	8	9
		Rs. A. P.				Rs. A. P.		Rs. A. P.
275	Pargana Talipabad, Siv Prosad.	1,146 10 7½		Residue— As. gds. kr. kt. 13 6 2 2	Jasoda Lal Roy and others	955 8 10½	.....	14 10 8
546	Pargana Rokanpur, Tappe Bowkanda John Hollo.	3,078 6 7½	. ..	Residue— 9 13 1 1	Ditto	1,860 0 5	.....	139 6 9
9906	Pargana Ran Bhowal Mirali Haidar.	1,125 5 0	.....	Residue	Maharaja Surja Kant Acherjee and others.	618 4 4	.....	12 3 11½

MOHENDRA CHUNDER MOZUMDAR, Deputy Collector in charge.

Dacca Collectorate, the 12th May 1905.

Notice.

NOTICE is hereby given, under sections 6 and 13 of Act XI of 1859, that the undermentioned estate and share of estate in the district of the 24 Parganas will be put up for sale at the office of the Collector of that district on the 14th June 1905, at 12 o'clock noon, for arrears of revenue and other demands which by law are realised as arrears of land revenue.

When in columns 5, 7 and 9 of the appended statement it is stated that only a share is to be sold, it is understood that a separate account is kept for that share and that the share or shares are excluded from sale

Consecutive number.	Tauzi No.	Name of pargana and mahal.	Sadar jama for the whole estate.	Whether the whole estate is to be sold.	If only a share is to be sold, the specification of such share.	Names of proprietors of properties to be sold.	If only a share is to be sold, the sadar jama of such share.	If the whole is to be sold, the arrears due from it.	If only a share is to be sold, the arrears due from it.
1	2	3	4	5	6		8	9	10
			Rs. A. P.				Rs. A. P.		Rs. A. P.
1	392/1	Azimabad, kismat Hudajoy-Chandipore.	8,313 7 8	..	Excluding 12as. share, remaining 4as. share.	Radhabinode Mandal and others.	2,078 5 11	....	711 1 2½

Alipore, the 5th May 1905.

BHUPATI CHAKRAVARTTI, for Collector.

Advertisement of Sale.

NOTICE is hereby given that the undermentioned plots of land, no longer required by Government, situated along the South Behar Section Railway, in the district of Monghyr, will be put up to sale at 10 o'clock on the 8th day of July 1905, corresponding with the 21st Asadh 1312 Fusli, at Barhi, village Indupur.

The purchasers of the several plots of land will be subject to the following conditions:—

1st.—The purchasers will have no power to make any excavations on the land nearer than 15 feet from the railway fencing, or plough the land closer than 3 feet from its foundation.

2nd.—If the amount of purchase-money does not exceed Rs. 100, the whole amount must be paid down at once.

3rd.—If the amount of purchase-money exceed Rs. 100, one-fourth of the amount must be immediately deposited. If the balance be not paid by noon of the fifteenth day after the sale, reckoning the day of sale as one, or if that day be a close holiday, then by noon of the first succeeding office day, the sale shall be cancelled, the sum deposited being forfeited to Government, and the lot again put up for sale at the risk of the defaulting purchaser, after issue of advertisement as in the case of original sale.

4th.—The plots of land will be sold revenue-free to the highest bidders.

5th.—The purchasers shall be put in possession on receipt by the Collector of the orders of the Board confirming the sale.

Consecutive lot number.	Name of district.	Pargana and mauza.	Number of mile on which land is situate.	Situated on which side of the railway.	Approximate area of lot in bighas and in acres. B. K. C.	Approximate area of lot in bighas and in acres. A. R. P.	Land excluded from sale from each lot. Reasons for exclusion.	Land excluded from sale from each lot. A. R. P.	Commencement and termination of lot.	Boundary of lot.
1	2	3	4	5	6		7		8	9
1	Monghyr	Indupur, pargana Salemabad.	.....	South of the railway line running from Howrah to Delhi.	3 17 15½	3 1 16·333	.....	.....	From 1 to 4.	*North*—Orchards belonging to Kali Singh, Chulha Dusadh, Muso Singh in Barhi and jote of Jagdeo Singh in relinquished B class land. *South*—Waste land and relinquished B class lands. *East*—Waste land. *West*—Railway fencing.
2	Ditto ...	Ditto ..	.....	Ditto ...	3 1 4½					
3	Ditto ...	Ditto ...	.....	Ditto ...	0 15 0					
4	Ditto ..	Ditto ...	.....	Ditto ...	2 8 16½					
					10 2 16½					

Monghyr, the 9th May 1905.

U. GUHA, *for* Collector.

Advertisement of Sale.

NOTICE is hereby given that the undermentioned plots of land, no longer required by Government, situated along the Nirmali Station of the Tirhut State Railway, in the district of Bhagalpur, will be put up to sale at 11 o'clock on the 30th June 1906, corresponding to 13th of Assar Fasli 1312 at Supaul Katchery, district Bhagalpur.

The purchasers of the several plots of land will be subject to the following conditions:—

1st.—The purchasers will have no power to make any excavations on the land nearer than 15 feet from the railway boundary, or to plough the land closer than 3 feet from its foundation.

2nd.—If the amount of purchase-money does not exceed Rs. 100, the whole amount must be paid down at once.

3rd.—If the amount of purchase-money exceed Rs. 100, one-fourth of the amount must be immediately deposited. If the balance be not paid by the noon of the fifteenth day after the sale, reckoning the day of sale as one, or if that day be a close holiday, then by noon of the first succeeding office day, the sale shall be cancelled, the sum deposited being forfeited to Government, and the lot again put up for sale at the risk of the defaulting purchaser, after issue of advertisement, as in the case of original sale.

4th.—The plots of land will be sold revenue-free to the highest bidder.

5th.—The purchasers shall be put in possession on receipt by the Collector of the orders of the Board confirming the sale.

Consecutive lot No.	Name of district.	Pargana and mauza.	Number of mile on which land is situate.	Situated on which side of the railway.	Approximate area of lot in bighas and in acres. B. K. C.	Approximate area of lot in bighas and in acres. A. R. P.	Land excluded from sale from each lot. Reasons for exclusion.	Land excluded from sale from each lot. A. R. P.	Commencement and termination of lot.	Boundary of lot.
45, 46, 47, 48, 49, 50, 51, 53, 53, 54, 55, 56, 57, 58, 59, 60, 61, 62 to 67, 69 to 114, 116 to 121, 125 to 127, 128, 129, 139, 140 and 141.	Bhagalpur	Mauza Nirmali, pargana Naredigar.	97	North ...	44 7 8 (Standard).	16·67 0 0	.....	.....	...	*North*—Mauza Nirmali. *South*—Land in possession of the railway. *East*—Road to Nirmali. *West*—Mauza Nirmali.

Bhagalpur, the 15th May 1905.

H. COUPLAND, Collector of Bhagalpur.

Advertisement of Sale.

NOTICE is hereby given that the undermentioned plots of land, no longer required by Government, situated along the Hajipur-Katihar Extension Railway, in the district of Monghyr, will be put up to sale at 10 o'clock on 8th day of July 1905, corresponding to the 21st Asarh 1312 Fasli, at Mohanpur, pargana Naipur.

The purchasers of the several plots of land will be subject to the following conditions:—

1st.—The purchasers will have no power to make any excavations on the land nearer than fifteen feet from the railway fencing, or plough the land closer than three feet from its foundation.

2nd.—If the amount of purchase-money does not exceed Rs. 100, the whole amount must be paid down at once.

3rd.—If the amount of purchase-money exceeds Rs. 100, one-fourth of the amount must be immediately deposited. If the balance be not paid by noon of the fifteenth day after the sale, reckoning the day of sale as one, or if that day be a close holiday, then by noon of the first succeeding office day, the sale shall be cancelled, the sum deposited being forfeited to Government, and the lot again put up for sale at the risk of the defaulting purchaser, after issue of advertisement, as in the case of original sale.

4th.—The plots of land will be sold revenue-free to the highest bidders.

5th.—The purchasers shall be put in possession on receipt by the Collector of the orders of the Board confirming the sale.

Consecutive lot No.	Name of district.	Pargana and mauza.	Number of mile on which land is situate.	Situated on which side of the railway.	Approximate area of lot in bighas and in acres.		Land excluded from sale from each lot.		Commencement and termination of lot.	Boundary of lot.
					B. K. C.	A. R. P.	Reasons for exclusion.	A. R. P.		
1	2	3	4	5	6		7		8	9
1	Monghyr	Mohanpur, pargana Naipur.	2 of the Hajipur-Katihar extension.	North ...	0 5 11	.....	.....	.....	From 1 to 3 ...	*North.*—Girja Chaudhry's land. *South.*—Waste land. *East.*—Railway fencing. *West.*—Alkhu Chaudhry's land.
2	Ditto ...	Ditto ...	Ditto ...	Do. ...	0 5 6	.....	.....	.....	.....	*North.*—Girja Chaudhry's land. *South.*—Railway fencing. *East.*—Railway fencing. *West.*—Girja Chaudhry's land.
	Ditto ...	Ditto ...	Ditto ...	Do. ...	0 0 12	.....	.....	.....	.....	*North.*—Girja Chaudhury's land. *South.*—Railway fencing. *East.*—Railway fencing. *West.*—Girja Chaudhury's land.

Monghyr, the 9th May 1905.

UMA PRASANNA GUHA, *for* Collector.

Notification A.

NOTICE is hereby given, under sections 6 and 13, Act XI of 1859, that the undermentioned estates and shares of estates in the district of Purnea will be put up for sale at the office of the Collector of that district on the 27th June 1905 at 12 o'clock noon, for arrears of revenue and other demands, which by law are realisable as arrears of land revenue.

When in columns 5, 7 and 9 of the appended statement it is stated that only a share is to be sold, it is to be understood that a separate account is kept for that share.

Tauzi No.	Name of mahal and pargana.	Sadar jama of whole estate.	Whether the whole estate is to be sold.	If only a share is to be sold, specification of such share or shares.	Names of proprietors of property to be sold.	If only a share is to be sold, the sadar jama of such share.	If the whole estate is to be sold, the arrears due from it.	If only a share is to be sold, the arrears due from it.
1	2	3	4	5	6	7	8	9
		Rs. A. P.					Rs. A. P.	
1175	Nisf pargana Katihar, pargana Katihar.	5,456 1 3½	Whole ...	.....	Bibi Fulkumari of Murshidabad.	.....	Land Revenue 3,052 10 7 Road Cess ... 621 11 6 Dák cess ... 30 2 6 Total ... 3,704 8 7	.....

Purnea, the 17th May 1905.

J. H. LEA, Collector.

District Charitable Society.

Abstract of Cash Accounts of the Central Office for the month of April 1905.

Budget for 1905.	RECEIPTS.	April 1905.	From 1st January to 30th April 1905.	Budget for 1905.	PAYMENTS.	April 1905.	From 1st January to 30th April 1905.
Rs.		Rs. A. P.	Rs. A. P.	Rs.		Rs. A. P.	Rs. A. P.
	Subscriptions—			14,808	Grant to District Committees	1,207 0 0	4,042 0 0
14,400	From Government	1,200 0 0	4,800 0 0	5,000	,, to Commission- er of Police for	Casual relief 205 6 3	1,021 2 0
2,250	,, the public	836 0 0	3,347 0 0			Establishment 75 0 0	300 0 0
6,250	Donations and new subscriptions ...	*242 0 0	**2,630 0 0	24,041	Grant to Native Committee	2,056 12 0	8,162 12 0
	Allowances towards cost of establishment—			9,930	Pensions paid through Central Office	894 8 0	3,302 0 0
3,000	From Government	250 0 0	1,000 0 0	252	Schooling fees ditto ...	24 0 0	98 0 0
280	Interest on General Reserve Fund ...	20 0 0	20 0 0	3,677	Special Relief (on private orders)	807 12 0	1,081 15 0
40,010	,, on Trust Funds		10,206 0 8	3,731	Alms House—Establishment ...	311 0 0	1,244 0 0
652	Bakery proceeds	†51 0 0	††191 1 0	6,000	Dieting ...	††12 12 3	††1,322 3 6
2,852	Workshed proceeds	§148 8 0	§§ 688 10 6	1,411	Contingencies ...	100 0 0	478 12 3
945	Refund on Casual Relief Account ...	196 1 3	472 12 9	..§	Boots and Shoes ...	... ...	... ...
2,259	,, on Special ,, ,, ...	674 5 3	1,240 14 3	500	Clothing and bedding	... ...	42 8 0
...	Legacies	.....	.....	2,870	Repairs ...	37 0 6	895 3 9
22	Miscellaneous accounts	0 2 6	0 10 8	2,008	Bakery	226 8 6	68) 12 3
339	Deposits	16 9 10	627 0 4	4,374	Workshed	§182 2 3	§§354.1 1 0
250	X'mas Dinner account	.....	.....	7,380	Central Office—Establishment ...	610 0 0	2,455 0 0
...	G. P. Notes withdrawn from Bank's safe custody.	.....	1,000 0 0	400	Commission on collections.	80 1 7	124 1 2
...	G. P. Notes by Corpus of Trust Funds ...	.....	.....	300	Auditing fees ...	.....	150 0 0
...	,, by Security Deposit	.....	.....	500	Rent (nett) ...	59 0 0	150 2 9
360	Donation to Native Committee ...	.....	.....	550	Contingencies ...	79 14 8	146 8 11
...	Govt. grant for Alms House repairs ...	.....	.....	750	Printing and advertising.	149 15 0	278 12 6
...	Sale-proceeds of stocks	.....	1,485 12 6	...	Interest on overdraft	... ...	... ...
				60	Bank's commission	1 0 0	37 6 7
				500	Law charges	.....	.....
				500	E. I. Railway Co. for passes	100 0 0	‡180 15 6
				339	Deposits	16 9 10	627 0 4
				250	X'mas Dinner account	.....	150 0 0
				...	Safe custody deposit of G. P. Note ...	... ...	.....
				...	Security sold	...	1,000 0 0
				...	Investment	... ...	858 8 11
				...	Refund towards security	...	985 12 6
31,670	Total ...	3,634 11 0	29,094 14 8	88,522	Total ...	6,946 11 1	30,018 5 11

New subscriptions * Rs. 110, ** Rs. 137. | ‡ Rs. 85-4-6 for casual relief; Rs. 19-10-6 for special relief.

Excluding cost of bread from Bakery for A. H. Dieting, † Rs. 232-8; †† Rs. 950, Budget being Rs. 2,052.
Excluding cost of flour from Workshed to Bakery, § Rs. 7-13; §§ Rs. 155-12, Budget being Rs. 887.

MEMO.

	Rs. A. P.	Rs. A. P.		Rs. A. P.	Rs. A. P.
Receipts as above	.....	29,094 14 8	Payments as above	.....	30,018 5 11
Balance at credit in Bank of Bengal on 1st January 1905	10,312 9 5		Balance at credit in Bank of Bengal on 30th April 1905	9,957 4 6	
Opening cash balance on that date	181 1 6		Cash balance in hand on that date	313 15 2	
		10,493 10 11			9,670 3 8
Total		40,188 9 7	Total ...		40,188 9 7

CALCUTTA,
The 10th May 1905.

K. MALLIKA,
Accountant.

H. S. CASHMAN,
Secretary.

Statement of the Affairs of the Bank of Bengal for the week ending 23rd May 1905.

LIABILITIES.

	Rs.	A.	P.
Capital paid up	2,00,00,000	0	0
Reserve Fund	1,32,00,000	0	0
Public Deposits at Head Office ... ... Rs. 93,20,001 11 6			
Ditto ditto at Branches ,, 67,00,575 8 4	1,60,20,577	3	10
Other Deposits at Head Office and Branches ...	11,44,15,556	12	4
Bank Post Bills, &c.	6,06,686	12	7
Sundries	29,71,492	4	4
Rupees ...	16,72,14,313	1	1

ASSETS.

	Rs.	A.	P.
Government securities	1,35,66,584	1	11
Other authorised investments	79,10,158	13	8
Loans on Government and other authorised securities	3,47,44,570	14	4
Accounts of credit on ditto ditto	2,04,04,296	11	7
Bills discounted and purchased	3,50,81,181	1	2
Balances with other Banks	14,26,893	14	1
Bullion	.....		
Dead Stock	18,54,849	13	10
Stamps	13,275	4	4
Sundries	12,70,681	11	11
	11,02,72,442	6	10
Cash & Currency Notes at Head Office* ... Rs. 3,19,39,382 13 11			
Cash & Currency Notes at Branches† ... ,, 1,90,02,507 12 4	5,09,41,870	10	3
Rupees ...	16,72,14,313	1	1

Includes Govt. & ‡ Govt., value Rs. 1,52,175 0 0
† Do. do. do. ,, 2,65,230 8 0
Rs. 4,17,405 8 0

BANK OF BENGAL,
Calcutta, 25th May 1905.

E. DICKINSON, Chief Accountant.
‡ Rate for Demand Loans, 4 per cent.
Percentage 38·01.

By order of the Directors,
W. D. CRUICKSHANK,
Secretary and Treasurer.

(605—1)

DACCA DISTRICT FUND.

Annual Accounts of the District Board of Dacca for the year ending 31st March 1905.

RECEIPTS.	Budget estimate, 1904-1905.	Previous year, 1903-1904.	Year of account, 1904-1905.
	Rs. A. P.	Rs. A. P.	Rs. A. P.
VI.—PROVINCIAL RATES—			
Rates and cesses on lands—			
Cess on land	95,495 0 0	82,764 2 4	85,029 0 4
XII.—INTEREST—			
Miscellaneous—			
Interest on arrear collections of road cess	238 0 0	195 13 6	254 10 6
XVII.—POLICE—			
Fees, fines and forfeitures—			
Pounds under Act I of 1871—			
Rents of pounds farmed out	7,521 0 0	7,351 5 9	7,404 3 9
Proceeds of unclaimed stray cattle	797 0 0	541 3 6	600 10 0
Miscellaneous	5 0 0	.....	.....
Total ...	8,323 0 0	7,892 9 3	8,004 13 9
XIX.—EDUCATION—			
Miscellaneous—			
Scholarship examination fees	200 0 0	913 0 0	7 4 0
Transfer fees	5 0 0	2 8 0	13 6 0
Miscellaneous	75 0 0	98 12 11	88 11 0
Total ...	280 0 0	1,014 4 11	109 5 0
XX.—MEDICAL—			
Hospital receipts—			
Sale-proceeds of medicines and medical stores	. .	.....	17 6 9
Income from endowments—			
Rent of lands and houses ...	375 0 0	186 11 6	657 15 9
Contributions—			
From private persons	831 0 0	977 3 3	1,161 9 0
Total ...	1,206 0 0	1,163 15 2	1,836 14 6
XXI.—SCIENTIFIC AND OTHER MINOR DEPARTMENTS—			
Receipts on account of public exhibitions and fairs—			
Miscellaneous	1,375 0 0	2,436 12 0	44 9 0
Contribution	800 0 0	764 13 0	820 0 0
Total ...	2,175 0 0	3,201 9 0	864 9 0
XXV.—MISCELLANEOUS—			
Sale of old stores and materials	186 0 0	7 1 3	23 13 3
Miscellaneous fees, fines and forfeitures—			
Fees, fines, and forfeitures .	1,945 0 0	550 14 0	169 4 6
Miscellaneous—			
Recoveries on account of cost for collecting arrear cesses ..	1,835 0 0	1,650 3 0	1,661 15 8
Miscellaneous receipts on account of road cess		167 3 2	730 12 0
Other items	520 0 0	405 0 10	44 2 3
Total ...	4,485 0 0	3,868 6 5	3,710 15 8

EXPENDITURE.	Budget estimate, 1904-1905.	Previous year, 1903-1904.	Year of account, 1904-1905.
	Rs. A. P.	Rs. A. P.	Rs. A. P.
18.—GENERAL ADMINISTRATION—			
General establishment of local funds—			
Office establishment	5,505 0 0	5,318 13 8	4,983 11 8
	−450 0 0		
Contribution for pension	+31 0 0	.....	30 10 4
Office contingencies	1,720 0 0	1,706 8 7	917 9 6
	+11−114 0 0		
Travelling allowance of members	500 0 0	347 12 0	431 8 0
Audit fee	1,000 0 0	859 8 0	1,161 2 4
	+240 0 0		
Total ...	8,225 0 0	8,234 10 3	7,524 9 10
20.—POLICE—			
Cattle-pound charges—			
Establishment	84 0 0	84 0 0	84 0 0
Contingencies	175 0 0	159 15 6	52 5 0
Total ...	259 0 0	243 15 6	136 5 0
22.—EDUCATION—			
Inspection—			
Sub-Inspectors	5,340 0 0	5,321 4 3	5,085 11 0
	+246 0 0		
Contribution for pension	90 0 0	..	33 5 4
Subordinate Inspecting Agencies	2,720 0 0	2,884 3 5	2,658 11 11
	+30 0 0		
Travelling allowances	4,740 0 0	4,467 4 11	4,602 8 0
Miscellaneous	100 0 0	101 8 6	79 8 9
Purchase and repair of furniture	100 0 0	.....	.....
Schools aided under the Grant-in-aid Rules—			
Middle English Schools ...	5,760 0 0	5,542 10 0	4,866 10 3
	−384 0 0		
Middle Vernacular Schools ...	2,511 0 0	1,942 8 0	2,443 0 0
	+338 0 0		
Primary schools	.....	192 0 0	.....
Other schools	192 0 0	.....	236 8 0
	+44 0 0		
Primary schools aided under other rules—			
Stipends in boys' schools ...	30,951 0 0	29,904 15 10	29,155 11 3
	−1,795 0 0		
Girls' schools	5,000 0 0	5,556 8 6	5,765 6 9
	+1,766 0 0		
Prizes	400 0 0	400 0 0	400 0 0
Cost of lower primary scholarship examination	135 0 0	932 1 0	15 4 0
In primary schools—			
Lower primary	2,016 0 0	634 14 2	943 14 4
Miscellaneous—			
Miscellaneous	50 0 0	22 8 0	248 14 0
	+191 0 0		
Total ...	60,675 0 0	57,904 8 7	59,125 7 7
	+38 0 0		
24.—MEDICAL—			
Hospitals and dispensaries—			
Civil Hospital Assistants— ...	550 0 0	1,063 9 6	1,633 0 0
	+1,074 0 0		
80 and less	+96+22 0 0		117 13 10
Servants	122 0 0	239 0 0	412 0 0
	+200 0 0		
Cost of country medicines ...	309 0 0	597 14 6	1,231 4 6
	+678+344 0 0		
Petty construction and repairs ...	50 0 0	.....	.....
Purchase and repair of furniture	+238 0 0	.....	237 9 0
Miscellaneous	1,260 0 0	731 8 11	787 11 8
Contributions to municipalities for maintenance of dispensaries	3,120 0 0	3,370 0 0	.
Grant-in-aid to hospitals and dispensaries	5,560 0 0	905 8 8	3,950 0 0
	−96−700 0 0		
	−1,936		
Sanitation and Vaccination—			
Vaccine establishment and charges—			
Miscellaneous charges	200 0 0	199 8 0	200 0 0
Grant for medical purposes—			
Expenses during the prevalence of bubonic plague—			
Expenses for local measures ...	300 0 0	... ..	.....
Total ...	11,481 0 0	7,117 1 10	5,630 7 0

RECEIPTS.	Budget estimate, 1904-1905.	Previous year, 1903-1904.	Year of account, 1904-1905.
	Rs. A. P.	Rs. A. P.	Rs. A. P.
XXXII.—CIVIL WORKS—			
In charge of Civil Officers—			
Ferries—			
Ferry tolls	25,094 0 0	23,038 14 0	31,745 13 3
Fines	10 0 0	.....	.....
Sale-proceeds of old boats, &c.	25 0 0	13 0 0	60 8 0
Sale-proceeds of trees and grass	275 0 0	163 15 3	103 4 3
Receipts from staging bungalows and serais	15 0 0	49 0 0	17 0 0
Rent of buildings and lands	670 0 0	570 13 0	143 9 0
Sale of buildings	.....	20 0 0	....
Contributions from private persons	1,196 0 0	816 0 0	175 0 0
Miscellaneous	295 0 0	61 13 6	46 13 0
Total ...	27,379 0 0	25,633 7 9	32,296 15 6
Allotment from Provincial to Local	37,607 0 0	78,902 3 3	40,981 8 1
Debt—			
Advances	3,600 0 0	5,231 9 8	1,186 10 0
Deposits	2,900 0 0	967 0 0	8,437 0 0
Total ...	6,500 0 0	6,198 9 8	9,623 10 0
Total Receipts ..	1,81,886 0 0	2,09,234 1 1	1,81,692 6 6

EXPENDITURE.	Budget estimate, 1904-1905.	Previous year, 1903-1904.	Year of account, 1904-1905.
	Rs. A. P.	Rs. A. P.	Rs. A. P.
26.—SCIENTIFIC AND OTHER MINOR DEPARTMENTS—			
Public exhibitions and fairs ...	2,175 0 0 +897 0 0	2,223 2 4	1,536 9 6
Veterinary and Stallion charges—			
Pay and travelling allowance of veterinary assistants	250 0 0	.....	250 0 0
Stipends to students in veterinary schools	84 0 0	.....	84 9 9
Total ...	2,509 0 0 +897 0 0	2,223 2 4	1,841 3 3
29.—SUPERANNUATION ALLOWANCES AND PENSIONS—			
Pensions	948 0 0 +316 0 0	1,006 4 8	1,215 1 9
30.—STATIONERY AND PRINTING—			
Stationery purchased from Central Stores	250 0 0 —250 0 0	.....	.....
Printing at private presses ...	550 0 0 +364 0 0	767 5 8	913 14 6
Total ...	800 0 0 +114 0 0	767 5 8	913 14 6
32.—MISCELLANEOUS—			
Contributions—			
Provident Fund contributions ...	420 0 0	432 13 0	356 7 6
Miscellaneous and unforeseen charges—			
Miscellaneous	700 0 0 +450 0 0	353 7 0	1,149 8 5
Total ...	1,120 0 0 +450 0 0	786 3 0	1,487 15 11
45.—CIVIL WORKS—			
Civil buildings—			
New works—			
Details as per schedule attached	+100 0 0 +277 0 0	150 4 7	285 8 10
Repairs—			
Details as per schedule attached	621 0 0 +1,530 0 0	929 15 2	2,067 1 10
Communications—			
New works—			
Details as per schedule attached	11,777 0 0 +61,233 0 0 —146 0 0	24,234 0 1	9,862 11 2
Repairs—			
Details as per schedule attached	46,744 0 0 +2,379 0 0 —499 0 0	39,913 2 6	44,626 13 9
Miscellaneous public improvements—			
New works—			
Details as per schedule attached	4,450 0 0 +2,958 0 0	5,241 8 5	4,509 3 7
Repairs—			
Details as per schedule attached	2,450 0 0 +822 0 0	1,813 5 10	1,356 7 1
Establishment—			
District Engineer	4,800 0 0	4,800 0 0	4,800 0 0
Overseers and Sub-Overseers ...	4,500 0 0 +230 0 0	4,500 0 0	4,671 0 9
Accountants and Clerks	1,908 0 0 +90 0 0	2,013 0 0	1,646 0 0
Travelling allowance	2,940 0 0 +57 0 0	2,557 3 3	2,978 9 8
Office contingencies	278 0 0 +4 0 0	364 6 6	183 6 6
Temporary petty establishment...	1,128 0 0	1,115 5 8	1,130 10 0
Tools and plant	286 0 0 +150 0 0	191 13 6	326 3 6
Refunds	—104 0 0	3,650 0 0	..
Total ...	81,047 0 0 +69,173 0 0	91,583 15 6	78,239 9 5
Contributions—			
To Provincial—			
Contributions	1,338 0 0	1,186 0 0	1,339 0 0
To other Boards	5 0 0	35 0 0	.....
Debt—			
Advances	3,600 0 0	3,493 3 10	3,469 6 5
Deposits	2,900 0 0	2,705 0 0	6,723 0 0
Total ...	8,505 0 0	8,233 3 10	10,902 6 5
TOTAL EXPENDITURE ...	1,78,904 0 0 +70,657 0 0	1,77,307 4 6	1,70,595 0 2

Dacca, the 24th May 1905.

(606—1)

J. T. RANKIN,
Chairman.

Notice.

NOTICE is hereby given that all documents filed in the Land Registration cases enumerated in the list below will be disposed of according to departmental rules unless delivery of them is taken by the parties concerned within a month from the date hereof :—

Statement showing the Land Registration cases in which the parties have not taken back the documents filed therein.

Serial No.	Number of case and year.	Name of party.	Particulars of property in respect of which the documents were filed.			
			Division.	Block.	Holding.	Number of premises and the name of the street.
1	338 of 1898-99 ..	Bama Charan Samadar	South	XIII	274	22, Molonga Lane.
2	491 of ,, ...	Mr. Owen Arratoon	Do. ...	I	336	13, Gomes' Lane.
3	119 of 1899-90 .	Abdul Samad	Do. ..	VIII	74	12, Moochipara Lane.
4	250 of 1891-92 ...	Monmohini Dasi	Do. ...	VII	333	33, Jaliapara Lane.
5	187 of ,, ...	Nistarini Debi and another ...	North ...	VII	252	21, Pataldanga Street.
6	506 of ,, ...	Radya Nath Shee	South ...	II	169	35, Doctor's Lane.
7	669 of ,, ...	Khettermoni Debi	North ...	XXIV	175	26, Ram Mohan Shaha's Lane.
8	747 of ,, ...	Shahebzada Muhammad Farrack Shah.	South ...	XXI	11 & 11½	5, Government Place.
9	I/284 of 1892-93 ...	Binodini Dasi	North ...	XIII	174	9, Kali Das Singh's Lane.
10	I/175 of ,, ...	Anath Nath Deb	South ...	XVI	238	9, Kapalitola Lane.
11	I/181 of ,, ...	Girish Chandra Das	Do. ...	XIV	184	1, Ramhari Mitter's Lane.
12	891 of ,, ...	Sattya Santi Banerjee	Do. ...	XIII	170	71 to 76, Bowbazar Street.
13	532 of ,, ...	Lala Nirmal Bokas Nandi ...	Do. ...	XVII	55	32, Free School Street.
14	601 of ,, ...	Elahijan Begum	North ...	IV	276	30, Lower Chitpur Road.
15	I/290 of ,, ...	.....	Do. ...	X	111	44, Ratoo Sircar's Lane.
16	I/50 of 1893-94 ...	Kiron Chandra Chatterjee ...	Do. ...	XV	110	17, Kristo Das Pal's Lane.
17	239 of ,, ...	Ariff Ismile Bham	Do. ...	X	337	18, Raj Mohun Bose's Lane.
18	117 of ,, ...	Sasi Bhusan Banerji	Do. ...	XI	38	30, Theatre Road.
19	I/258 of ,, ...	Gobindo Chandra Mandle ...	Do. ...	XIX	198	33, Ramtaran Bose's Lane.
20	I/259 of ,, ...	Ditto ...	Do. ...	XIX	196	29, Ditto.
21	I/196 of ,, ...	Debnarain Raha	Do. ...	X	57	14, Ratoo Sircar's Lane.
22	I/329 of ,, ...	Guru Das Kundu Chowdhury...	South ...	XIII	591	43, Chandni Chowk.
23	393 of 1894-95 ...	Dwarka Nath Banerjee	North ...	I	342	5, Akhil Mistri's Lane.
24	494 of 1893-94 ...	Sydani Aftaban Nessa Bibi ...	South ...	IV	83	13, 14 & 16, Godai Khansama's Lane.
25	233 of 1895-96 ...	Sarat Chandra Sen	North	XIV	319	22, Sukea Street.
26	43 of ,, ...	Hem Chandra Bose *versus* Adharmoni Dasi.	Do. ...	XIII	97	12, Brindabon Mullick's Lane.
27	274 of ,, ...	Dwarka Nath Ganguly	Do. ...	XIV	420	6, Guru Prosad Chowdhuri's Lane.
28	365 of 1898-99 ...	R. Belchambers	Do. ...	XVII	111	43 & 43-1, Beniatolla Street.
29	411 of ,, ...	Monmohini Debi *versus* Batto Kristo Chakravarti.	Do. ...	X	269	16, Ramprosad Shaha's Lane.
30	556 of 1899-1900 ...	Jotindra Nath Pal *versus* Kesub Das Mohanto.	Do. ...	XVII	366	37, Burtollah Street.
31	633 of ,, ...	W. Leslie	South ...	VIII	18	60, Dharamtolah Street.
32	56 of 1900-1901 ...	Monuron Nessa Bibi	Do. ...	XV	70	7, Syed Ismail's Lane.
33	594 of 1898-99 ..	Khadra Nessa Bibi *versus* Hiranjan Bibi.	Do. ...	II	230	96, Taltola Bazar Street.
34	477 of 1900-01 ...	Atul Krishna Ghose *versus* Gobinda Chandra Bose.	North ...	XXIV	10	21, Issur Mill's Lane.
35	442 of ,, ...	Syed Hasst Ali *versus* Fatima Bibi.	South ...	IX	18	5, Wellesley 1st Lane.
36	439 of 1901-02 ...	Bhagwan Das Khettry	North ..	III	136	8, Phear's Lane.
37	46 of ,, ...	Mohendra Prosad Sandel *versus* Tarak Brahmo Lahiri.	Do.	XIV	171	36, Maddon Mitter's Lane.
38	249 of ,, ...	Abdul Wahid	South ...	XV	64	10, Kerr's Lane.
39	178 of ,, ...	Mir Imam Ali	Do.	IX	90	31-1, Maredon Street.
40	19 of ,, ...	Jagar Nath Byrack *versus* Kanai Lall Marowari.	North ...	XVIII	105	1, Sibtolla Street.
41	501 of 1900-01 ...	Chunder Coomar Kundu ...	Do. ...	XIV	28	65, Baranossi Ghose's Street.
42	62 of 1901-02 ...	Naymoon Nessa Bibi	South .	XIV	246	116, Collinga Bazar Street.
43	362 of 1900-01 ...	Administrator-General, Bengal, as administrator to the estate of G. T. Rebeiro *versus* Bhagabat Rudra.	North ...	IV	44	274, Bowbazar Street.

Calcutta Collectorate, the 24th May 1905.

MAHANANDA GUPTA, Collector.

Notice.

PURSUANT to the orders of Government, dated the 29th June 1881, particulars of the undernoted items of articles held by the Port Commissioners as Receivers of Wrecks, each article being of value above Rs. 100, are published for general information in accordance with the provisions of section 76, Act VII of 1880 :—

Date.	Recovery No.	Description of articles.	Weight.	Approximate value.	Where recovered.	Where lying.
1905. May 6th ...	2 P.A.	Chain, 3" of 17 fathoms ...	Cwt. qrs. lbs. 36 2 9	Rs. 146	Poojali ...	On board the *Vulcan*, A.-V.

F. A. LOVELL, *for* Deputy Conservator.

Port Commissioners' Office, Calcutta, the 6th May 1905. (536—3)

Abstract of the Estates Partition Fund of district Saran for the year 1904-05, prepared as required by section 42, Act V (B.C.) of 1897.

	Rs.	A.	P.
Balance at credit of the Fund on 1st April 1904	6,434	14	6
Receipts for the year 1904-05	14,096	0	4
	20,530	14	10
Disbursements during the year	13,810	11	4
Balance at credit of the Fund on 31st March 1905	6,720	3	6

N. BONHAM-CARTER, *Collector.*

SARAN COLLECTORATE, *the 25th May 1905.* (606—1)

FORM II.

INSTRUCTIONS 97 AND 128.

Abstract of the Estates Partition Fund of district Bhagalpur for the year 1904-05.

[Prepared as required by section 42, Act V (B.C.) of 1897.]

	Rs.	A.	P.
Balance at credit of the Fund on the 1st April	3,251	2	5
Receipts for the year	3,141	2	4
...	6,392	4	9
Disbursements during the year	3,608	9	9
Balance at credit on 31st March	2,783	11	0

H. COUPLAND, *Collector.*

BHAGALPUR COLLECTORATE, *the 22nd May 1905.* (607—1)

Notice of Deaths sent to the Administrator-General of Bengal, under section 64 of Act II of 1874.

Name of deceased.	Place of death.	Date of death.	By whom death reported and when.	REMARKS.
Mr. Peter Tregear, late of No. 5 Didar Bukah's Lane, Calcutta.	Presidency General Hospital.	31st Mar. 1905 ...	Commissioner of Police, on 3rd April 1905.	No information whether the deceased has left a Will.
Mr. Charles Ewing, late of Madras.	Nedon's Hotel, Lahore.	18th April ,, ...	District Judge, Lahore, on 6th April 1905.	Left no Will.
Mr. Archibald Allyman, late an Inspector of Works in the employ of W. C. B. Railway.	Erai Camp, Chauda	19th ,, ,, ...	District Judge, Chauda, on 26th April 1905.	Not known whether the deceased has left a Will.
Mr. Henry Drake	Kamptee ...	5th ,, ,, ...	District Judge, Nagpur, on 26th April 1905.	No Will. No application.
Mr John Duffy, late a retired Military Assistant Surgeon.	Chunar	3rd Dec. 1904 ...	District Judge, Mirzapur, on 27th April 1905.	No information whether the deceased has left a Will.
Mr. Homes, late a guard on the Bengal North-Western Railway, Muzaffarpur.	Muzaffarpur Railway Station.	.....	District Judge, Tirhut, on 2nd May 1905.	No Will. No information.
Mr. Arkwright, late of Majura cherra.	...	15th Aug. 1904 ...	District Judge, Sylhet, on 6th May 1905.	Ditto. Ditto.
Mr. John Hennan, late an Overseer, Jail Department.	Port Blair	13th April 1905 ...	District Judge, Andaman Settlement, on 8th May 1905.	Widow of the deceased applied for Letters of Administration.
Mr. Dugan, late an Assistant Magistrate of Bhagalpur.	Bhagalpur	19th Mar. ,, ...	District Judge, Bhagalpur, on 9th May 1905.	Left no Will.
Mr. S. G. Piper, late an Engine-driver, North-Western Railway, Moolton.	Lahore	16th April ,, ...	District Judge, Moolton, on 13th May 1905.	Will left.
Mr. A. R. H. Tondorf, late a Permanent-Way Inspector on the R. M. Railway.	Agra	13th ,, ,, ...	District Judge, Agra, on 16th May 1905.	Will left. Probate granted to the Executor.
Mr. John Francis Exness, late Steward of the Agra Club.	.....	1st May ,, ...	District Judge, Agra, on 19th May 1905.	Son of the deceased has applied for Letters of Administration.
Mr. Charles Phillip Sconcia, late Assistant District Superintendent of Police, Punjab.	Jullundar	10th ,, ,, ...	District Judge, Jullandar, on 17th May 1905.	Left no Will.

Calcutta, the 26th May 1905. HENRY T. HYDE, Administrator-General of Bengal.

In the 2nd Court of the Subordinate Judge of Shahabad.

EXECUTION CASE No. 79 of 1905.

Babu Kailash Chunder Banerjee, decreeholder, *versus* Babu Mahadeo Singh and others, judgment-debtors.

THE undermentioned properties of judgment-debtors appertaining to mahal Raghubirgarh Kaindi, pargana Chainpore, thana Bhabhua, bearing tauzi No. 2998 and Jama Sadar Rs. 1,269-5-4 will be sold by the Nazir of the District Judge's Court, Arrah, at 12 O'clock noon on the 3rd July 1905 for realization of Rs. 15,426-5-6:

(1) Eight annas out of 16 annas in mauza Kakari Koondi, valuation Rs 1,475.

(2) Eight annas out of 16 annas in mauza Annapore, valuation Rs. 1,892.

(3) Three annas 2 pies 8 krants, out of 16 annas in mauza Doomaria, valuation Rs. 531.

(4) Three annas 2 pies 8 krants share out of 16 annas in mauza Maradih, valuation Rs. 1,144.

(5) Eight annas share out of 16 annas in mauza Ghatkari Khoord, valuation Rs 1,924.

(6) Three annas 2 pies 8 krants share out of 16 annas in mauza Khancha, valuation Rs. 348.

(7) Three annas 2 pies 8 krants share out of 16 annas in mauza Pataria, valuation Rs. 135.

(8) Eight annas share out of 16 annas in mauza Amahara, valuation Rs. 1,050.

(9) Eight annas out of 16 annas in mauza Jharia, valued at Rs. 1,543.

(10) Eight annas out of 16 annas in mauza Baghaota, valued at Rs 886

(11) Four annas out of 16 annas in mauza Asnada, valued at Rs. 204.

(12) Three annas 2 pies 8 krants out of 16 annas in mauza Simaria, valued at Rs. 268.

(13) Three annas 2 pies 8 krants out of 16 annas in mauza Kaindi Khas, valued at Rs. 2,000.

(14) Three annas 2 pies 8 krants out of 16 annas in mauza Mohua Pokhoor, valued at Rs. 310.

NISTARAN BANERJEE, Subordinate Judge.

Arrah, 2nd Subordinate Judge's Court, the 27th May 1905. (615—1)

Notification.

TO be peremptorily sold pursuant to the decree and order of the Calcutta High Court, Original Side, made in suit No. 652 of 1894 (The Administrator-General of Bengal *versus* Annoda Prosad Dass and others), and dated, respectively, the 9th December 1897 and 7th January 1899, by the Registrar of the said Court in his sale-room in the Court-house on Saturday, the 24th day of June 1905, at 12 o'clock noon, the undermentioned property, viz.:—

All that partly three-storied, partly two-storied and partly one-storied tenanted house and premises No. 8 Ram Komul Mukerjee's Street, at Kiddorpore, in the suburbs of Calcutta, and the land appertaining thereto, and whereon the same is built, containing about 7 cottahs 1 chitak and 13 square feet, more or less, and bounded on the north by the dwelling-house of Prokash Chunder Mukherjee, on the east by a blind lane, on the south by Ram Komul Mukerjee's Street, and on the west by the premises No. 9 Ram Komul Mukerjee's Street, from which this house is separated by a pucca surface drain appertaining to and forming a part of it. The roof and building over a portion of the said drain has not yet been separated from that of the said premises No. 9 Ram Komul Mukerjee's Street.

The abstract of title and the conditions of sale may be seen at the office of the said Registrar in the Court-house or at the office of Messrs. G. C. Chunder & Co., No. 2 Old Post Office Street, on any day before the sale and will be produced at the sale.

W. R. FINK, Registrar.

G. C. Chunder & Co., Plaintiff's Attorneys.

High Court, Original Side, Calcutta, the 3rd May 1905.

(544—1—340)

Notice.

SEPARATE sealed tenders in Form No. 2 are invited for the following works. They will be received up to the noon of 31st May 1905. Plans and estimates can be seen in the office of the undersigned during office hours. An earnest-money of, Rs. 50 for each of the following works should be credited into the Howrah Treasury and the challan should accompany each tender:—

	Rs.
(1) Repairs to Amta-Jhinkra road ...	800
(2) Repairs to Bagnan-Mankoor road ...	800
(3) Repairs to Duke road ...	1,000
(4) Construction of a foot-bridge at Panpur	1,145
(5) Widening Andul Station Road ...	1,000

GANENDRA NATH GANGULY, Dist. Engineer.

Howrah District Board, the 17th May 1905.

(585—2)

Notice.

List of unclaimed goods lying in the Custom House Wharf.

Vessel.	Mark and No.	Description of packages.
S. S. "Neuenfels"	M. H. 1768	1 case air-guns and ammunition.

The above package will be disposed of, if not cleared on or before the 14th June 1905, under section 88, Sea Customs Act.

B. FOLEY,

Offg. Collector of Customs.

Custom House, Calcutta, the 20th May 1905.

Wanted

A SARISHTADAR for the Monghyr Collectorate on a salary of Rs. 120 rising by biennial increments to Rs. 200 per mensem. Applicants must have experience of Collectorate work, and must know the vernacular of the district. Applications will be received up to the 10th June 1905.

C. A. OLDHAM,

Collector of Monghyr.

Monghyr Collectorate, the 3rd May 1905.

Wanted

A SARISHTADAR for Patna Collectorate. Salary Rs. 120 rising by biennial increment of Rs. 8 to Rs. 200.

Applications will be received up to 17th June next. Applicants should present themselves before the undersigned on the 20th idem.

H. C. WOODMAN, Collector.

Patna Collectorate, Bankipur, the 26th May 1905.

Wanted

A MUHARRIR on Rs. 20 a month, with a prospect of rising to Rs. 30 by annual increments of Re. 1, for the office of the Deputy Commissioner, Palamau. Candidates with a fair knowledge of English, Urdu and Hindi will be preferred. Applications will be received by the undersigned up to the 15th June.

S. R. HIGNELL, Depy. Commr. of Palamau

Daltonganj, the 26th May 1905.

WANTED for Brahmanbaria Municipality, in Tippera a survey-passed Overseer. Pay Rs. 25 with prospect of increment. An English-knowing man who has served in any Municipality or has knowledge in municipal works will be preferred. The applications will be received by the undersigned up to 15th June 1905.

BEPIN BEHARY DATTA, Vice-Chairman.

Brahmanbaria, the 18th May 1905. (603—2)

WANTED a Temporary Surveyor and Draftsman for the District Engineer's office, Nadia Pay Rs. 25 a month with an allowance of Rs. 10 when in field.

Applications with copies of testimonials will be received by the undersigned on or before the 10th June next.

The selected candidate will have to join at once.

SATIS CHUNDER CHATTERJEE, District Engineer.

Krishnagar, the 24th May 1905.

(656—2)

WANTED an assess or to assess one of the wards of the Bhadreswar Municipality. The work to be finished within one month. Candidates must apply before 8th June 1905, stating qualifications and terms, to Chairman, Bhadreswar Municipality.

The 30th May 1905. (657—2)

Notice.

WANTED a Lecturer on Annuities and Insurance for the Evening classes in connection with Commercial Education in the Presidency College on an allowance of Rs. 1,600 a year.

Preference will be given to a person who is employed in an Insurance Office.

Applications with copies of testimonials will be received by the undersigned on or before the 20th June 1905.

P. K RAY,

Offg. Principal, Presidency College.

Presidency College, Calcutta, the 16th May 1905.

Wanted

A CIVIL VETERINARY ASSISTANT for the Angul District and three Wards Tributary States. Salary Rs. 50, personal allowance Rs. 10, and fixed travelling allowance Rs. 15 per month. Applications with copies of testimonials to be submitted before the 15th June 1905.

Applicants to state age.

E. MCLEOD SMITH, Deputy Commissioner.

Angul, Orissa, the 16th May 1905.

Wanted

AN experienced draftsman on Rs. 30 to Rs. 40 a month according to qualifications. Candidates should state age, qualifications, past services, and present pay, and submit copies of their certificates. Selected candidates will have to produce their drawings when required.

Preference will be given to one having long experience of railway land acquisition work. Apply immediately to

The Special Land Acquisition Deputy Collector,

Bhagalpur.

Camp Supoul, the 19th May 1905.

Wanted

SOME experienced amins on Rs. 20 a month and travelling allowance according to Civil Service Regulations. The candidates must know English and Hindi, and write a good hand and be able to extract areas accurately by talo square. Applications with copies of certificates (all in the candidate's own handwriting) should be made at once to

The Special Land Acquisition Deputy Collector,
Bhagalpur.

Camp Supoul, the 19th May 1905.

Wanted

A CASHIER on Rs. 25 a month and travelling allowance according to Civil Service Regulations. The selected candidate should give security in Rs. 2,000 in cash or Government promissory notes.

Applications with copies of certificates of respectability and qualifications in the candidate's own handwriting should be made to

The Special Land Acquisition Deputy Collector,
Bhagalpur.

Camp Supoul, the 19th May 1905.

WANTED two Sub-Overseers for the Saran District Board on a monthly salary of Rs. 30, plus travelling allowance of Rs. 10 each for six months.

None need apply who is not qualified under paragraph 3 (*a*) or (*b*) of the B. G. No. 3334L.S.-G., dated 20th December 1901.

Applications with copies of testimonials will be received by the undersigned up to 10th June 1905.

E. J. BULL,
District Engineer, Saran.

Chapra, the 13th May 1905. (594—2)

Notice

WANTED by the District Board of Burdwan—

(*a*) A passed Accountant having experience in District Engineers' and P. W. D. accounts, on a salary of Rs. 80 rising to Rs. 100 by an annual increment of Rs. 3.

(*b*) An Overseer on a salary of Rs. 50 and horse allowance of Rs. 15. He must be qualified under rule 7 (2) of Part IX.

(*c*) A Sub-Overseer on a salary of Rs. 30 and travelling allowance of Rs. 10. He must be qualified under rule 7 (3) of Part IX.

Applications with copies of testimonials will be received by the undersigned up to 15th June next.

HARI DAS PAL, B.C.E.,
District Engineer, Burdwan.

District Engineer's Office, Burdwan, the 20th May 1905. (592—2)

Notice.

A CERTIFICATE under section 36 of Act II of 1874 to the estate of Mrs. Ripsy Lane, late of Chinchuria, in the district of Asansole in Bengal, who died at Chinchuria aforesaid on 7th March 1905 intestate, has been granted to Arthur Lane of Chinchuria aforesaid, at present residing at No. 36 Chowringhee Road in Calcutta, an assistant of the firm of the New Birbhum Coal Company, Ld., as husband of the deceased to enable him to administer the estate. All persons being indebted to, or having claims against, the estate should communicate with the said Arthur Lane.

HENRY T. HYDE,
Administrator-General of Bengal.

3 Council House Street, Calcutta, the 25th May 1905. (600—1)

Notice.

A CERTIFICATE under section 36 of Act II of 1874 to the estate of David Jacob, late of 28 Elgin Road in Bhowanipur, in the suburbs of Calcutta, who died intestate on 1st November 1904, has been granted to Lydia Jacob residing at the said No. 28 Elgin Road as the widow of the deceased to enable her to administer the estate All persons being indebted to or having claims against the estate should communicate with the said Lydia Jacob.

HENRY T. HYDE,
Administrator-General of Bengal.

No. 3 Council House Street, Calcutta, the 29th May 1905. (611—1)

ATUL KRISHNA RAY, Pleader, Alipur, intends to be enrolled as a Vakil, High Court, Calcutta. (578—4—339)

NAGENDRA NATH MUKHOPADHYAYA, M.A., B.L., intends to be enrolled as a Vakeel of the High Court, Calcutta. (514—4—317)

Estate Marian Martha Arabella Gouldsbury, deceased, wife of Colonel D. E. Gouldsbury.

NOTICE is hereby given that all creditors and other persons having any claims against the estate of the deceased abovenamed are hereby required to send in writing the particulars thereof to Messrs. King, Hamilton & Co., 7 Hare Street, Calcutta, on or before the 10th day of July 1905, after which date the undersigned will distribute the assets of the estate of the said deceased among the parties entitled thereto having regard to the claims of which he has then had notice.

And notice is hereby further given that the undersigned will not be liable for the assets or any part thereof so distributed to any person of whose claim he shall not have had notice at the time of such distribution.

A. J. KER,
Administrator with Will annexed of the Property and Credits of the deceased,
7 Hare Street, Calcutta.

Dated this 23rd day of May 1905. (598—3)

INSOLVENT NOTICES.

In the matter of JACOB ABRAHAM, an insolvent.

On Tuesday, the 2nd day of May instant, it was ordered that Tuesday, the 6th day of June next, be appointed for the further hearing of this matter, and that unless cause be shewn to the contrary on that day the said insolvent be discharged personally as well as to his after acquired property from all liabilities for debts, claims and demands of and against the said insolvent at the time of the filing of his petition for relief.

Insolvent in person. (596—2)

In the matter of RAM NATH, lately carrying on business as dealer in piece-goods at Nos. 162 and 164 Harrison Road, Barra Bazar, in the town of Calcutta, unedr the style and firm of RAM NATH PANDIT, an insolvent.

On the 8th day of December last, it was, on the petition of Buktearmull Abbhar, a creditor of the said insolvent, adjudged that the said Ram Nath hath committed an act of insolvency under the provisions of the Act XI, Vic. Cap. XXI, and by another order of the same date the estate and effects of the said insolvent were vested in the Official Assignee.

Krishna Kissore De, Attorney. (613—2)

In the matter of UDOY CHUNDER MOOKERJEE, an insolvent.

On the 22nd day of November last by an order of this Court the said insolvent was adjudged entitled to his personal discharge under the Act XI Vic., Chap. XXI, as to all persons named in his schedule as creditors or claiming to be creditors respectively.

Insolvent in person. (614—1)

In the matter of J. D. NICOLAS, an insolvent.

On Tuesday, the 2nd day of May instant, it was ordered that the Assignee do pay and divide the sum of Rs. 1,945-6-8 to and amongst all the creditors upon the estate of the said insolvent as a dividend at the rate of annas 4 per cent. upon such of the debts as are admitted in the schedule of the said insolvent and such claims as shall be proved or substantiated to the satisfaction of the said Assignee in proportion to their several debts with leave to the Official Assignee to apply to this Court from time to time for directions respecting any debts or any other matter or thing relating thereto

A. B. Miller, Official Assignee. (615—1)

In the matter of BHOYRODAN BOID and another, insolvents.

On Tuesday, the 2nd day of May instant, it was ordered that the Assignee do pay and divide the sum of Rs. 1,242-6-4 to and amongst all the creditors upon the estate of the said insolvents as a dividend at the rate of Rs. 4 per cent. upon such of the debts as are admitted in the schedule of the said insolvent and such claims as shall be proved or substantiated to the satisfaction of the said Assignee in proportion to their several debts with leave to the Official Assignee to apply to this Court from time to time for directions respecting any debts or any other matter or thing relating thereto.

A. B. Miller, Official Assignee. (616—1)

In the matter of KHETTER NAUTH CHATTERJEE, an insolvent.

On Tuesday, the 4th day of April last, it was ordered that the Assignee do pay and divide the sum of Rs. 1,089-6-1 to and amongst all the creditors upon the estate of the said insolvent as a dividend at the rate of Rs. 3-13 per cent. upon such of the debts as are admitted in the schedule of the said insolvent and such claims as shall be proved or substantiated to the satisfaction of the said Assignee in proportion to their several debts with leave to the Official Assignee to apply to this Court from time to time for directions respecting any debts or any other matter or thing relating thereto.

A. B. Miller, Official Assignee. (617—1)

In the matter of ISSUR DASS and JUGGERNATH, insolvents.

On Tuesday, the 4th day of April last, it was ordered that the Assignee do pay and divide the sum of Rs. 1,730-10-10 to and amongst all the creditors upon the estate of the said insolvents as a dividend at the rate of 11 annas 9 pies per cent. upon such of the debts as are admitted in the schedule of the said insolvent and such claims as shall be proved or substantiated to the satisfaction of the said Assignee in proportion to their several debts with leave to the Official Assignee to apply to this Court from time to time for directions respecting any debts or any other matter or thing relating thereto.

A. B. Miller, Official Assignee. (618—1)

In the matter of LEKRAM and BULDEO DAS, an insolvent.

On Tuesday, the 4th day of April last, it was ordered that the Assignee do pay and divide the sum of Rs. 1,479-10-3 to and amongst all the creditors upon the estate of the said insolvents as a dividend at the rate of Rs. 2-1 per cent. upon such of the debts as are admitted in the schedule of the said insolvent and such claims as shall be proved or substantiated to the satisfaction of the said Assignee in proportion to their several debts with leave to the Official Assignee to apply to this Court from time to time for directions respecting any debts or any other matter or thing relating thereto.

A. B. Miller, Official Assignee (619—1)

In the matter of SOSHI BHUSAN BOSE, an insolvent.

On Tuesday, the 4th day of April last, it was ordered that the Assignee do pay and divide the sum of Rs. 3,965-12-5 to and amongst all the creditors upon the estate of the said insolvent as a dividend at the rate of Rs. 14 per cent. upon such of the debts as are admitted in the schedule of the said insolvent and such claims as shall be proved or substantiated to the satisfaction of the said Assignee in proportion to their several debts with leave to the Official Assignee to apply to this Court from time to time for directions respecting any debts or any other matter or thing relating thereto.

A. B. Miller, Official Assignee. (620—1)

In the matter of UPENDRA CHUNDER SINGHA and another, insolvents.

On Tuesday, the 4th day of April last, it was ordered that the Assignee do pay and divide the sum of Rs. 5,206-12-3 to and amongst all the creditors upon the estate of the said insolvents as a dividend at the rate of Rs. 3-4 per cent. upon such of the debts as are admitted in the scheduleof the said insolvents, and such claims as shall be proved or substantiated to the satisfaction of the said Assignee in proportion to their several debts with leave to the Official Assignee to apply to this Court from time to time for directions respecting any debts or any other matter or thing relating thereto.

A. B. Miller, Official Assignee. (621 –1)

In the matter of JEWAN RAM LUTCHEE RAM, an insolvent.

On Tuesday the 2nd day of May, it was ordered that the Assignee do pay and divide the sum of Rs. 423-4-10 to and amongst all the creditors upon the estate of the said insolvent as a dividend at the rate of 5 annas 6 pies per cent. upon such of the debts as are admitted in the schedule of the said insolvent and such claims as shall be proved or substantiated to the satisfaction of the said Assignee in proportion to their several debts with leave to the Official Assignee to apply to this Court from time to time for directions respecting any debts or any other matter or thing relating thereto.

A. B. Miller, Official Assignee. (622—1)

In the matter of HARRY GEORGE LOUIS PANCHAND, an insolvent.

On Tuesday, the 2nd day of May instant, it was ordered that the Assignee do pay and divide the sum of Rs. 471-8-3 to and amongst all the creditors upon the estate of the said insolvent as a dividend at the rate of annas 10 pies 6 per cent. upon such of the debts as are admitted in the schedule of the said insolvent and such claims as shall be proved or substantiated to the satisfaction of the said Assignee in proportion to their several debts with leave to the Official Assignee to apply to this Court from time to time for directions respecting any debts or any other matter or thing relating thereto.

A. B. Miller, Official Assignee. (623—1)

In the matter of SHEODAN MULL, an insolvent.

On Tuesday, the 2nd day of May instant, it is ordered that the Assignee do pay and divide the sum of Rs. 530-6-8 to and amongst all the creditors upon the estate of the said insolvent as a dividend at the rate of Rs. 3 per cent., upon such of the debts as are admitted in the schedule of the said insolvent and such claims as shall be proved or substantiated to the satisfaction of the said Assignee in proportion to their several debts with leave to the Official Assignee to apply to this Court from time to time for directions respecting any debts or any other matter or thing relating thereto.

A. B. Miller, Official Assignee. (624—1)

In the matter of HAYWARD PRITCHARD RUSHTON and others, insolvents.

On Tuesday, the 2nd day of May instant, it was ordered that the Assignee do pay and divide the sum of Rs. 3,678-15-8 to and amongst all the creditors upon the estate of the said insolvents as a dividend at the rate of 7 annas 6 pies per cent, upon such of the debts as are admitted in the schedule of the said insolvent and such claims as shall be proved or substantiated to the satisfaction of the said Assignee in proportion to their several debts with leave to the Official Assignee to apply to this Court from time to time for direction respecting any debts or any other matter or thing relating thereto.

A. B. Miller, Official Assignee. (625 - 1)

In the matter of BUCKTWAR CHAND and another, insolvents.

On Tuesday, the 2nd day of May instant, it was ordered that the Assignee do pay and divide the sum of Rs. 1,013-6-2 to and amongst all the creditors upon the estate of the said insolvents as a dividend at the rate of annas 8 per cent. upon such of the debts as are admitted in the schedule of the said insolvents, and such claims as shall be proved or substantiated to the satisfaction of the said Assignee in proportion to their several debts with leave to the Official Assignee to apply to this Court from time to time for directions respecting any debts or any other matter or thing relating thereto.

A. B. Miller, Official Assignee. (626—1)

In the matter of AKHOY KUMAR MOOKERJEE, an insolvent.

On Tuesday, the 2nd day of May instant, it was ordered that the Assignee do pay and divide the sum of Rs. 2,768-1-3 to and amongst all the creditors upon the estate of the said insolvent as a dividend at the rate of Rs. 2 per cent. upon such of the debts as are admitted in the schedule of the said insolvent, and such claims as shall be proved or substantiated to the satisfaction of the said Assignee in proportion to their several debts with leave to the Official Assignee to apply to this Court from time to time for directions respecting any debts or any other matter or thing relating thereto.

A. B. Miller, Official Assignee. (627—1)

In the matter of CHARLES ROSSITAR, at present of No. 9 Bentinck Street, in the town of Calcutta, late a guard employed on the East Indian Railway Company, now without employment, a European British subject, an insolvent.

Notice that the petition of the said insolvent seeking the benefit of the Act XI Vic., Chapter XXI, was filed in the Office of the Chief Clerk on Tuesday, the 14th day of March last, and by an order of the same date the estate and effects of the said insolvent were vested in the Official Assignee.

J. N. Chatterji, Attorney. (628—1)

In the matter of HENRY HORATIO ARDWISE, of No. 115 Dhurrumtollah Street, in the town of Calcutta, now employed as Head Assistant in the Criminal Department of the High Court of Judicature at Fort William in Bengal in its Appellate Jurisdiction, an insolvent.

Notice that the petition of the said insolvent seeking the benefit of the Act XI Vic., Chapter XXI, was filed in the Office of the Chief Clerk on Monday, the 17th day of April last, and by an order of the same date the estate and effects of the said insolvent were vested in the Official Assignee.

G. C. Chunder & Co., Attorneys. (629—1)

In the matter of EDITH DEANE, of No. 74 Dhurrumtollah Street, a boarding house-keeper, an insolvent.

Notice that the petition of the said insolvent seeking the benefit of the Act XI Vic., Chapter XXI, was filed in the Office of the Chief Clerk on Friday, the 14th day of April last, and by an order of the same date the estate and effects of the said insolvent were vested in the Official Assignee.

Insolvent in person. (630—1)

In the matter of AMOLUCK CHAND LOHURA, residing at No. 17-1 Shibtollah Street, in the town of Calcutta, and carrying on business under the name, style and firm of Floyd & Co. at No. 69-11 New China Bazar Street in the aforesaid town, at present a Bazar Reporter to *Bangabasi*, *Hitabadi* and *Hitabartha*, an insolvent.

Notice that the petition of the said insolvent seeking the benefit of the Act XI Vic., Chapter XXI, was filed in the Office of the Chief Clerk on Tuesday, the 28th day of March last, and by an order of the same date the estate and effects of the said insolvent were vested in the Official Assignee.

Manuel and Agurwalla, Attorneys. (631—1)

In the matter of EDWIN BLUETT, a guard on the East Indian Railway, residing and stationed at Bandel Junction, in the district of Hooghly, a British-born subject, an insolvent.

Notice that the petition of the said insolvent seeking the benefit of the Act XI Vic., Chapter XXI, was filed in the Office of the Chief Clerk on Friday, the 14th day of April last, and by an order of the same date the estate and effects of the said insolvent were vested in the Official Assignee.

Insolvent in person. (632—1)

In the matter of GOKUL CHUNDER SHAHA, residing at No. 2-1 Joy Mitter's Ghat Lane in the town of Calcutta, formerly carrying on business as trader in co-partnership with Talik Chunder Mazumdar under the name, style and firm of Bissumbhar Mazumdar at No. 238-2 Upper Chitpore Road, and as gomashta of the said Talik Chunder Mazumdar at the place aforesaid, at present a broker, an insolvent.

Notice that the petition of the said insolvent seeking the benefit of the Act XI Vic., Chapter XXI, was filed in the Office of the Chief Clerk on Tuesday, the 2nd day of May instant, and by an order of the same date the estate and effects of the said insolvent were vested in the Official Assignee.

A. C. Ghose, Attorney. (633—1)

In the matter of WILLIAM STIRLING HALSEY, residing at No. 72-3 Corporation Street in the town of Calcutta, a Civil Engineer, an insolvent.

Notice that the petition of the said insolvent seeking the benefit of the Act XI Vic., Chapter XXI, was filed in the Office of the Chief Clerk on Friday, the 28th day of April last, and by an order of the same date the estate and effects of the said insolvent were vested in the Official Assignee.

P. N. Sen, Attorney. (634—1)

In the matter of WILLIAM ST. A. JORDAN, residing at No. 13-1 Old Post Office Street, in the town of Calcutta, formerly carrying on business as a Contractor and Electric Engineer at No. 49 Chowringhee in Calcutta under the name, style and firm of William St. A. Jordan, and since the 1st day of October 1904 serving as a canvasser in the employ of British Electric Company at Calcutta, an insolvent.

Notice that the petition of the said insolvent seeking the benefit of the Act XI Vic., Chapter XXI, was filed in the Office of the Chief Clerk on Thursday, the 27th day of April last, and by an order of the same date the estate and effects of the said insolvent were vested in the Official Assignee.

Insolvent in person. (635—1)

In the matter of HURRY PADA DAS SEN, residing at No. 8-1 Dewan's Lane, Sonagachee, in the town of Calcutta, employed in the East Indian Railway and Co., as an Assistant Parcel Clerk, an insolvent.

Notice that the petition of the said insolvent seeking the benefit of the Act XI Vic., Chapter XXI, was filed in the Office of the Chief Clerk on Saturday, the 29th day of April last, and by an order of the same date the estate and effects of the said insolvent were vested in the Official Assignee.

J. N. Mitra, Attorney. (636—1)

In the matter of ABDUL MAJID, residing at No. 31 Champatolla 1st Lane, in the town of Calcutta, lately carrying on business as a hide merchant at No. 18 Sukea's Lane, in Calcutta aforesaid, under the name and style of Munshee Abdul Majid, a trader, an insolvent.

Notice that the petition of the said insolvent seeking the benefit of the Act XI Vic., Chapter XXI, was filed in the Office of the Chief Clerk on Wednesday, the 19th day of April last, and by an order of the same date the estate and effects of the said insolvent were vested in the Official Assignee.

Fox and Mondal, Attorneys. (637—1)

In the matter of ABUL FUTTAH MAHOMED ABDUL HAFIZ, of No. 66 Alimuddin Street, but now a prisoner in Presidency Jail, an insolvent.

Notice that the petition of the said insolvent seeking the benefit of the Act XI Vic., Chapter XXI, was filed in the Office of the Chief Clerk on Tuesday, the 11th day of April last, and by an order of the same date the estate and effects of the said insolvent were vested in the Official Assignee.

Md. Sultan Alum, Attorney. (638—1)

In the matter of PROTAB CHAND JOHURY, residing at No. 198 Harrison Road, in the town of Calcutta, a broker in jewellery, an insolvent.

Notice that the petition of the said insolvent seeking the benefit of the Act XI Vic., Chapter XXI, was filed in the Office of the Chief Clerk on Saturday, the 29th day of April last, and by an order of the same date the estate and effects of the said insolvent were vested in the Official Assignee.

Fox and Mondal, Attorneys. (639—1)

In the matter of SHAIK JAFFER and SHAIK ABDOOL BARICK, both residing at No. 21 Goodeamah's Lane, in the town of Calcutta, who up to the end of March 1904 had carried on business in co-partnership as meat-sellers but who have since been respectively serving as servants in the employ of Mahomed Israel, a butcher in the New Market, Calcutta, insolvents.

Notice that the petition of the said insolvents seeking the benefit of the Act XI Vic., Chapter XXI, was filed in the Office of the Chief Clerk on Monday, the 17th day of April last, and by an order of the same date the estate and effects of the said insolvent were vested in the Official Assignee.

P. N. Paul, Attorney. —— (640—1)

In the matter of CHOUTMULL and RAMBALLAV, at present residing at No. 22 Benstolla Gully, in the town of Calcutta, lately carried on business as shopkeepers at No 22 Cotton Street, Burrabazar, in the said town of Calcutta, under the name, style and firm of Kanai Lall Ramballav, at present doing nothing, insolvents.

Notice that the petition of the said insolvent seeking the benefit of the Act XI Vic., Chapter XXI, was filed in the Office of the Chief Clerk on Saturday, the 25th day of March last, and by an order of the same date the estate and effects of the said insolvents were vested in the Official Assignee.

Insolvents in person. —— (641—1)

In the matter of NARAIN DASS BANERJEE, lately carrying on business as a Jute Baler at No. 6 Old China Bazar Street, in the town of Calcutta, and at present residing at No. 15 Shampooker Street, in the town of Calcutta, and now without any occupation, an insolvent.

Notice that the petition of the said insolvent seeking the benefit of the Act XI Vic., Chapter XXI, was filed in the Office of the Chief Clerk on Saturday, the 8th day of April last, and by an order of the same date the estate and effects of the said insolvent were vested in the Official Assignee.

A. K. Thakur, Attorney. —— (642—1)

In the matter of PROMOTHO NATH MOOKERJEE, residing at No. 6 Nebutola Lane in the town of Calcutta, and serving as a clerk in the Bank of Bengal at Calcutta, an insolvent.

Notice that the petition of the said insolvent seeking the benefit of the Act XI Vic., Chapter XXI, was filed in the Office of the Chief Clerk on Tuesday, the 28th day of March last, and by an order of the same date the estate and effects of the said insolvent were vested in the Official Assignee.

Insolvent in person —— (643—1)

In the matter of JOHN BERRYMAN, residing at No. 9 Bentinck Street in the town of Calcutta and serving as a clerk in the employ of Messrs. Whiteaway, Laidlaw and Company in Calcutta, an insolvent.

Notice that the petition of the said insolvent seeking the benefit of the Act XI Vic., Chapter XXI, was filed in the Office of the Chief Clerk on Wednesday, the 29th day of March last, and by an order of the same date, the estate and effects of the said insolvent were vested in the Official Assignee.

Insolvent in person. —— (644—1)

In the matter of PERCY JOHN SHERMAN, residing at No. 2/1 Creek Road in the town of Calcutta, at present without any employment, an insolvent.

Notice that the petition of the said insolvent seeking the benefit of the Act XI Vic., Chapter XXI, was filed in the Office of the Chief Clerk on Saturday, the 8th day of April last, and by an order of the same date the estate and effects of the said insolvent were vested in the Official Assignee.

Swinhoe & Co., Attorneys. —— (645—1)

In the matter of GEORGE FRANK ALEXANDER, *alias* GEORGE FREDERICK ALEXANDER, residing at No. 6 Fairlie Place, in the town of Calcutta, formerly a pilot in the service of the Government of Bengal, but now a pensioner, an insolvent.

Notice that the petition of the said insolvent seeking the benefit of the Act XI Vic., Chapter XXI, was filed in the Office of the Chief Clerk on Thursday, the 6th day of April last, and by an order of the same date the estate and effects of the said insolvent were vested in the Official Assignee.

H. C Ghose, Attorney. —— (646—1)

In the matter of MANICK CHUNDER PYNE of No. 14 Arkouly Lane in the town of Calcutta, carrying on business in hosiery and woolen goods at No. 101 Old China Bazar Street in Calcutta, under the name and style of Manick Chunder Pyne, an insolvent.

Notice that the petition of the said insolvent seeking the benefit of the Act XI Vic, Chapter XXI, was filed in the Office of the Chief Clerk on the 13th day of December last, and by an order of the same date the estate and effects of the said insolvent were vested in the Official Assignee.

A. T. De, Attorney. —— (647—1)

In the matter of TOOLSI NEEPON, residing at No. 155 Sova Bazar Street in the town of Calcutta, and lately carrying on business at the aforesaid place as a petty grocer under the name of Toolsi Neepon and at present working as a labourer, an insolvent.

Notice that the petition of the said insolvent seeking the benefit of the Act XI Vic, Chapter XXI, was filed in the Office of the Chief Clerk on Monday, the 17th day of April last, and by an order of the same date, the estate and effects of the said insolvent were vested in the Official Assignee.

K. M. Rakshit, Attorney. —— (648—1)

In the matter of LUKHY NARAIN DUTT, an insolvent.

Notice that an application for an *ad interim* protection order was made by the said insolvent on the 27th instant, and that such application will be heard and disposed of by the Acting Commissioner of the Insolvent Court on Monday, the 5th day of June next, at the hour of half-past 10 o'clock in the forenoon.

☞ Any Creditor of the said insolvent desirous of opposing such application must appear before the said Court at the time and place aforesaid.

Leslie and Hinds, Attorneys (652—1)

In the matter of JADU NATH SEN GUPTA, an insolvent.

Notice that an application for an *ad interim* protection order was made by the said insolvent on the 26th instant, and that such application will be heard and disposed of by the Acting Commissioner of the Insolvent Court on Monday, the 5th day of June next, at the hour of half-past 10 o'clock in the forenoon.

☞ Any creditor of the said insolvent desirous of opposing such application must appear before the said Court at the time and place aforesaid.

S. D. Dutt and Gupta, Attorneys. (653—1)

In the matter of CHARAN DAS PAL, an insolvent.

Notice that an application for an *ad-interim* protection order has been this day made by the said insolvent, and that such application will be heard and disposed of by the Acting Commissioner of the Insolvent Court on Monday, the 5th day of June next, at the hour of half-past ten o'clock in the forenoon.

☞ Any creditor of the said insolvent desirous of opposing such application must appear before the said Court at the time and place aforesaid.

Bonnerjee and Bonnerjee, Attorneys. (654—1)

In the matter of JASPER LAMPHIER, an insolvent.

Notice that an application for an *ad-interim* protection order has been this day made by the said insolvent, and that such application will be heard and disposed of by the Acting Commissioner of the Insolvent Court on Monday, the 5th day of June next, at the hour of half-past ten o'clock in the forenoon.

☞ Any creditor of the said insolvent desirous of opposing such application must appear before the said Court at the time and place aforesaid.

Insolvent in person. (655—1)

Insolvency Notice.

NOTICE is hereby given that the undermentioned dividends are lying unclaimed:—

Estate Sundermull and others (Sundermull Sitaram), insolvents.

Nos.	Names of creditors.	Amount of claim.	1st dividend at Re. 10 per cent.
		Rs. A. P.	Rs. A. P.
12	Hazarimull Sirdarmull	2,973 4 8	294 10 8

Estate Roghoonath Dass and Mudden Gopaul, insolvents.

		Rs. A. P.	3rd dividend at Re. 1-10 per cent. Rs. A. P.
169	Paniappa Shetty	39,673 11 9	644 10 11

A. B. MILLER, Official Assignee.

Calcutta, the 26th May 1905. (609—1)

CALCUTTA POST OFFICE NOTICE.

Mails for—	Date and hour of closing at the General Post Office, Calcutta.		Route by which despatched.
	1905.	P.M.	
United Kingdom, Aden, Egypt, Europe, America, West Africa *vid* United Kingdom and East Africa *vid* Aden (and also South Africa, if superscribed on the cover *vid* United Kingdom or Aden).	June 1	At 6 30	Per P. & O. steamer from Bombay.
Parcels and money-orders for the United Kingdom and other Foreign places.	May 31	Parcels, 5 P.M.; M.-O., 4 P.M.	Ditto ditto.
* Australasian Colonies ..	June 5	At 7-30	*Vid* Tuticorin and Colombo.
† Straits Settlements (also China and Japan, if the Steamer's name is superscribed on the cover).	,, 2	,, 8-30	Per steamer.
Burma	,, 1	,, 7-30	Per B. I. S. N. Co.'s steamer.
Burma, Penang and Singapore.	,, 3	,, 7-30	
Akyab, Kyaukpyu and Sandoway.	,, 2	,, 7-30	
Burma, Tavoy and Mergui ..	,, 5	,, 7-30	
Mauritius, Réunion, Mayotte, and Nossi-Bé.	May 31	,, 7-30	Per steamer *Sunthia* from Colombo.
Mauritius, Réunion, Mayotte, and Nossi-Bé (Supplementary.)	June 1	,, 7-30	
Port Blair	,, 3	,, 7-30	*Vid* Rangoon.

* Although the date entered in column 2 is, as far as can be calculated, the latest safe date of posting for the next Mail steamer, full allowance being made for the steamer being in advance of her published timing, Mails for the places mentioned in column 1 are despatched daily to Tuticorin, so that they may proceed by any steamer from Colombo that has been unusually accelerated or retarded, or by any special opportunity that may be afforded by a steamer not belonging to one of the regular lines.

† Correspondence for China and Japan is despatched daily to Tuticorin, so that it may proceed by the first steamer from Colombo.

1. The letter-box for Inland articles will be cleared for the forenoon Mails at the following hours:—
   For Goalundo, Arakan and Chittagong, at 5-45 A.M.
   For Midnapore and Orissa districts, at 9 A.M.
   For the Eastern districts, as far as Dacca and Mymensingh, at 6-15 A.M.
   For Khulna and Jessore districts, at 7 A.M.
   For Bombay, Central Provinces and Midnapore *vid* Bengal-Nagpur Railway, at 11-15 A.M., and with a late fee of ½ anna up to 11-40 A.M.

2. The letter-box will be cleared for the evening Mails at the following hours, viz.—
   For the East Indian Railway Loop Mail, at 2-30 P.M., and with a late fee of ½ anna up to 2-55 P.M.
   For the Northern Bengal, Darjeeling and Assam Mails, at 3-25 P.M., and with a late fee of ½ anna up to 3-50 P.M.
   For the Bombay Mail *vid* Jubbulpore, at 6 P.M., and with a late fee of ½ anna up to 6-30 P.M.
   For the Punjab Mail, at 7-30 P.M.
   For Midnapore, Orissa, Madras Presidency and Ceylon, at 7-30 P.M.
   For the Khulna Mail, at 7-30 P.M.
   For the Eastern Bengal Mail, Darjeeling, and places on the Darjeeling-Himalayan Railway, at 7-30 P.M.
   } and with a late fee of ½ anna up to 8 P.M. and with a late fee of 1 anna up to 8-45 P.M.

3. Late registered letters will be received between the following hours:—
   For the Bombay Mail *vid* Jubbulpore, from 5 P.M. to 6-15 P.M.
   For the Punjab Mail, from 6 P.M. to 7 P.M.
   For the Eastern Bengal Mail, from 6 P.M. to 7 P.M.
   For the Khulna Mail from 6 P.M. to 7 P.M.
   For Midnapore, Orissa, Madras Presidency and Ceylon, from 6 P.M. to 7 P.M.

NOTE.—The late fee on each registered letter will be 2 annas, which must be prepaid in stamps on the letter.

4. Articles for Burma and for Port Blair by sea are received without late fee up to 7-30 P.M., and with a late fee of ½ anna up to 8 P.M.

5. On the latest safe day of despatch of Mails for the Australasian Colonies, or any other Foreign Countries, *viâ* Madras or Tuticorin, the letter-box for Foreign articles will be cleared for the last time at 7-30 P.M., and late letters and papers fully prepaid will be received up to 8-45 P.M.

6. On the day of despatch of the Mail for Europe (Thursday) the letter-box for Foreign articles will be cleared for the last time for articles, without the late fee, at 6-30 P.M., and late letters and papers fully prepaid will be received up to 6-45 P.M. Late registered articles will be received from 5 to 6 P.M. On the day of despatch of any Foreign Mail by sea, the letter-box will be cleared for the last time, without the late fee, up to 8-30 P.M., and late letters and papers up to 9 P.M. The late fee for Foreign articles is 4 annas, which must be prepaid in stamps affixed to the articles.

CALCUTTA G. P. O., *The 29th May 1905.* } JOHN OWENS, *Presidency Postmaster.*

Nadia Rivers.

Report showing the least depths of water for the week ending Friday, the 26th May 1905.

Name of River.	Reach of River.	Least depth of water soundings. Ft.	in.	REMARKS.
Bhagirathi.	Entrance from Ganges ...	3	6	
	Thence to Geriah ...	4	0	Momintola.
	From Geriah to Jangipur ...	3	9	Kahupur.
	,, Jangipur to Berhampore	3	9	Lalbag.
	,, Berhampore to Katwa...	3	0	Bootghat.
	,, Katwa to Nadia ...	3	6	Rookunpur.
Bhairab-Jalangi.	Entrance from Ganges ...	5	6	
	Thence to Akriganj ...	4	9	Khamarihat.
	Akriganj to junction of the Bhairab and Jalangi	3	6	Harharia.
	Thence to Patkabari	5	0	Lalnagar.
	Patkabari to Nadia	3	3	Hahtra.
Mathabhanga.	Entrance from Ganges ...	1	3	
	Thence to Dewanganj ...	0	3	Dewanganj.
	From Dewanganj to Shikarpur	0	9	Hakorab.
	,, Shikarpur to Boalia ...	2	0	Bhara'.
	,, Boalia to Chuadanga ...	3	0	Muhammadpur
	,, Chuadanga to Kissenganj and Hanskhali ...	5	6	Rajpur.

Gauge Readings.

	Locality.	Date.	Hour	Height above zero.	Height above mean sea level.	REMARKS.
Ganges ...	Shahzanj ..	27-5-1905	A.M. 6	Ft. 2·08	Ft. 70·92	Rise.
	Rampur Boalia...	27-5-1905	Noon	3·84	45 88	,,
	Entrance of Bhagirathi Geriah...	26-5-1905	A.M. 7	3·40	53·40	,,
	Entrance of Bhyrab Jalangi, Akriganj ...	26-5-1905	A.M. 7	3·30	41·26	,,
	Entrance of Mathabhanga ...	.....	...	...	...	...
Bhagirathi.	Jangipur ...	26-5-1905	A.M. 4	24·68	51·15	Rise.
	Berhampore ...	26-5-1905	A.M. 7	5 86	39·01	,,
	Katwa ..	26-5-1905	P.M. 5	5 80	20·96	,,
Jalangi	Krishnagar ...	26-5-1905	...	1·90	...	...
	Karupganj ...	27-5-1905	Noon	4·80	4·80	Fall.
Mathabhanga.	Hanskhali ...	26-5-1905	P.M. 4	5·34	16·20	,,

A. K. BANERJI, *Accts.*,
for *Exe. Engr., Nadia Rivers Division.*

Berhampore, the 29th May 1905.

THE INDIAN LAW REPORTS.

Published in FOUR SERIES, viz.:

CALCUTTA, MADRAS, BOMBAY AND ALLAHABAD.

THE Indian Law Reports, published under the authority of the Governor General in Council, are printed in monthly Parts, which are issued, as soon as possible after the first of each month, at Calcutta, Madras, Bombay and Allahabad, respectively.

The Reports comprise four Series—one for the Calcutta High Court, a second for the Madras High Court, a third for the Bombay High Court, and a fourth for the Allahabad High Court.

The cases heard by the Privy Council on appeal from each High Court are reported in the Series for that High Court. Cases heard by the Privy Council on appeal from Provinces in India not subject to any High Court are reported in the Calcutta Series.

The Calcutta Series is distributed by the Bengal Secretariat Book Depôt; and the Madras, Bombay and Allahabad Series are distributed direct from Madras, Bombay and Allahabad, respectively.

Persons desiring to subscribe for or purchase the Reports should apply to—

the Officer in charge, Bengal Secretariat Book Depôt, Calcutta, or

the Superintendent, Government Press, Madras, or

the Superintendent, Government Central Press, Bombay, or

the Curator of Government Books, United Provinces of Agra and Oudh, Allahabad.

PRICES.

THE terms of subscription, and the terms on which current issues and back numbers are sold, are as follows:—

	Without postage.	With Indian postage.	With Foreign postage.
COMPLETE SERIES—	Rs. A. P.	Rs. A. P.	Rs. A. P.
Current issues, per annum	.....	22 8 0	28 0 0
Back numbers, per annum	20 0 0	22 8 0	28 0 0
CALCUTTA SERIES—			
Current issues or back numbers, per annum ..	10 0 0	12 8 0	14 0 0
MADRAS, BOMBAY or ALLAHABAD SERIES—			
Current issues or back numbers, per annum ...	6 0 0	7 0 0	8 0 0
ANY MONTHLY PART—			
Calcutta Series	2 0 0	2 0 0	2 0 0
Madras, Bombay or Allahabad Series	1 0 0	1 0 0	1 0 0

All payments must be made in advance. Remittances to Calcutta should be addressed to the TREASURER, BENGAL SECRETARIAT, *Writers' Buildings, Calcutta.*

PARTS OUT OF STOCK AND DUPLICATE COPIES.

WHEN a requisition is received for any set of the Reports, and any Parts are out of stock, the following deduction from the foregoing rates is made for such Parts:—

	Without postage.	With Indian postage.
CALCUTTA SERIES—	Rs. A. P.	Rs. A. P.
All Parts for one year	7 2 6	8 6 3
Any one Part	0 8 9	0 10 3
MADRAS, BOMBAY or ALLAHABAD SERIES—		
All Parts for one year	4 4 6	4 11 3
Any one Part	0 5 3	0 5 9

If any Part is lost in transit to a subscriber, and the fact is reported to the office of distribution within three months from the date of publication, a duplicate will be supplied at the following rate:—

	Without postage.	With Indian postage.
	Rs. A. P.	Rs. A. P.
CALCUTTA SERIES	0 8 9	0 10 3
MADRAS, BOMBAY or ALLAHABAD SERIES	0 5 3	0 5 9

REPRINTS.

THE Complete Series for the years 1876 to 1881, 1883, 1886, 1888, 1890, 1892 to 1895 and 1899 to 1903 has been reprinted, and may be purchased at the Bengal Secretariat Book Depôt, Calcutta, either wholly or in part. All Parts required to complete the stock of the Reports for other years are now being reprinted. Complete Reports from the beginning to date will therefore shortly be available at the Bengal Secretariat Book Depôt.

ADVERTISEMENTS FOR THE CALCUTTA SERIES.

ADVERTISEMENTS of law publications only are received. Rates can be ascertained on application to the Bengal Secretariat Book Depôt.

THE BENGAL LAW REPORTS.

SEVERAL volumes of the Bengal Law Reports from August 1868 to December 1875, and Full Bench Rulings, Parts I and II, are available at the Bengal Secretariat Book Depôt, Calcutta, at the following rates:—

	Without postage.	With Indian postage.
	Rs. A. P.	Rs. A. P.
BENGAL LAW REPORTS, for one year ...	20 0 0	22 8 0
Single copies, each	2 0 0	2 0 0
FULL BENCH RULINGS Part I and II ...	20 0 0	22 8 0

Pure Sulphate of Quinine and Sulphate of Cinchonidine.

MANUFACTURED AT THE BENGAL GOVERNMENT CINCHONA PLANTATION.

FROM 1st April 1905 the price of these articles will be as follows:—

Quinine.

1 Pound tin, Rs. 16, or, post free, Rs. 16-8.
½ " " " 8 " " " " 8-6.
¼ " " " 4 " " " " 4-6.

Cinchonidine.

1 Pound tin, Rs. 12, or, post free, Rs. 12-8.
½ " " " 6 " " " " 6-6.
¼ " " " 3 " " " " 3-6.

ANALYSIS shows these articles to be of the purest manufacture; and they are guaranteed to be free from wilful admixture with the inferior alkaloids. They are for sale only to Government officers, and only for cash, and may be had from the Superintendent, Botanic Garden, Sibpur, near Calcutta. Cinchonidine can also be purchased by dealers at the following rates:—

1 Pound tin, Rs. 16, or, post free, Rs. 16-8.
½ " " " 8 " " " " 8-6.
¼ " " " 4 " " " " 4-4.

Cinchona Febrifuge.

Cinchona Febrifuge can be purchased by all Government officers and by any one taking *five pounds* and upwards at a time from the Superintendent, Botanic Garden, Calcutta, at the following rates—per four-ounce tin, Re. 1 ans. 14; per eight-ounce tin, Rs. 3 ans. 12; per pound tin, Rs. 7 ans. 8; the general public can be supplied by the Superintendent, Botanic Garden, *for cash only*, at the undernoted rates—per four-ounce tin, Rs. 2 ans. 4; per eight-ounce tin, Rs 4 ans. 8; per pound tin, Rs. 9. This medicine is also sold by the principal European and Native druggists in Calcutta. Postage, four annas per four-ounce tin; six annas per eight-ounce tin; and eight annas per pound tin, in addition to the foregoing rates.

THE CALCUTTA GAZETTE.

The 1st March 1901.—From this date the subscription to, and postage for, the *Calcutta Gazette* will be at the following rates, payable in advance:—

PER ANNUM.	For Calcutta.	For the Mufassal including postage.
	Rs. A.	Rs. A.
Entire *Gazette*	15 0	20 0
Parts I, Ia and Ib together ...	5 0	7 8
Part II	1 0	2 12
Parts III, IV and IVa together	4 0	6 0
" V and VI together ..	2 0	3 0
Appendix (Marine Notifications)	1 0	2 12
Supplement	5 0	7 8
PER ISSUE.		
Entire *Gazette*	0 8	0 10
Supplement	0 4	0 6

N B.—Separate Parts of each issue of the *Gazette*, and occasionally important Rules and Extracts, can be obtained from the Officer in charge, Bengal Secretariat Book Depôt, at the rate of one anna for every sixteen pages or a fraction thereof. Postage according to weight.

RATES FOR ADVERTISEMENTS in the *Calcutta Gazette*:—

Full page, per issue ... ... Rs 20
Half " " " ... ... " 10

Casual advertisements, 4 annas per line per insertion.

Parts I, II, and III of a Descriptive Catalogue of the Sanskrit Manuscripts in the Library of the Calcutta Sanskrit College, prepared by Pandit Hrishikesa Sastri and Babu Siva Chandra Gui, M.A., B.L., of that College, are offered to the public for sale. The Catalogue is to be completed in 28 parts, the price of each part being 12 annas a copy, exclusive of postage. Copies can be obtained from the Principal of the Sanskrit College, Calcutta.

GOVERNMENT PUBLICATIONS FOR SALE

At the Bengal Secretariat Book Depôt, Writers' Buildings, Calcutta, and by the following Agents :—

AGENTS IN INDIA.

Messrs Thacker, Spink & Co., Calcutta and Simla.
Messrs. Newman & Co., Calcutta.
Messrs Higginbotham & Co., Madras.
Messrs. Thacker & Co., Ld., Bombay.
Messrs. A. J. Combridge & Co., Bombay.
The Superintendent, American Baptist Mission Press, Rangoon.
Mrs. Radhabai Atmaram Sagoon, Bombay.
Messrs. R. Cambray & Co., Calcutta.
Rai Sahib M Gulab Singh & Sons, Proprietors of the Mufid-i-am Press, Lahore, Punjab.
Messrs. S. K. Lahiri & Co., Printers and Booksellers, College Street, Calcutta.
Messrs. V. Kalyanarama Iyer & Co., Booksellers, &c., Madras.
Messrs. D. B. Taraporevala, Sons & Co., Booksellers, Bombay.
Messrs. G. A. Natesan & Co., Madras.
Mr. N. B. Mathur, Superintendent, Nasir Kanum Hind Press, Allahabad.
The Calcutta School Book Society.

AGENTS IN ENGLAND.

Mr. E. A. Arnold, 41 and 43 Maddox Street, Bond Street, London, W.
Messrs. Constable & Co. 16 James Street, Hay Market, London, W.
Messrs. Kegan Paul, Trench, Trübner & Co., Charing Cross Road, London.
Mr. B Alfred Quaritch, 15 Piccadilly, London.
Messrs. P S. King & Son, 2 & 4 Great Smith Street, Westminster, London.
Messrs. H. S King & Co., 65 Cornhill, London.
Mr. B. H. Blackwell, 50-51, Broad Street, Oxford.
Messrs. Deighton Bell & Co., Cambridge.

AGENTS ON THE CONTINENT.

Messrs. R. Friedländer & Sohn, Berlin, N. W. Carlstrasse, 11.
Mr. Otto Harrassowitz, Leipzig.
Mr. Karl Hiersemann, Leipzig.
Mr. Ernest Leroux, 28 Rue Bonaparte, Paris.
Mr. Martinus Nijhoff, The Hague.

NOTICE.—Books required for private use can be purchased. Applications should be accompanied by remittance in each case.

All remittances on account of subscriptions to, or prices of, Gazettes, Indian Law Reports or other Government publications available for sale at the Bengal Secretariat Book Depôt, or for cost of advertisements published in the Gazettes should, in future, be made payable to the "Treasurer, Bengal Secretariat, Calcutta." Advices of such remittances, if separately sent, should be addressed to the "Accountant, Bengal Secretariat." All advertisements intended for publication in the *Calcutta* or *Bengali Gazette* should be sent direct to the Superintendent, Government Printing, Bengal.

Books required for the Public Service should be obtained through the Heads of Departments.

☞ *The amounts within parentheses are for packing and postage.*

NEW PUBLICATIONS ISSUED DURING THE CURRENT QUARTER.

APPOINTMENT DEPARTMENT.

Quarterly Civil List for Bengal, corrected up to 1st April 1905. Rs. 3. (4s.)

GENERAL DEPARTMENT.

Kurukh Folk-lore in the original collected and transliterated by Revd. Ferd Hahn. F'cap. 4to, cloth. Rs. 2. (3s.)
List of officers in the Subordinate Educational Service, Bengal, corrected up to 1st April 1905. F'cap Paper cover. As. 8 (1s).

LEGISLATIVE DEPARTMENT.

The Sunderbans Act 1905 (Ben. Act I of 1905) in English, Bengali or Hindi. 6p. (1s.)
The Bengal Repealing Act 1905 (Ben. Act II of 1905) in English Bengali or Hindi. 6p. (1s.)
The Indian Paper Currency Act 1905 (III of 1905) in Bengali. As. 2. (1s.)
Ditto ditto in Hindi. As. 2-6. (1s.)
The Indian Railway Boards Act 1905, (V of 1905) in Bengali or Hindi. 6p. (1s.)
The Bengal Smoke Nuisances Act 1905 (Bengal Act III of 1905) in English. As. 2 (1s.).

POLITICAL DEPARTMENT.

Administration Report on the Jails of Bengal for the year 1904. F'cap., boards. Paper cover. Re 1 (4s.).

PUBLIC WORKS DEPARTMENT.

Classified List and Distribution Return of the Bengal Public Works Department, Establishment, corrected up to 31st March 1905. As. 4. (2s.)

REVENUE DEPARTMENT.

A Monograph on Gold and Silver Work in the Bengal Presidency. By D. N. Mookherjee, Assistant Director, Land Records and Agriculture. F'cap. Paper cover. Re. 1-8. (3s.)
Annual Report on the Survey Operations in Bengal during the year 1903-04. F'cap. Paper cover. Re. 1 (2s.).
Annual Progress Report on Forest Administration in the Lower Provinces of Bengal for the year 1903-04. F'cap. Paper cover. Re. 1-4 (2s.).
Annual Report of the Director of the Department of Land Records and Agriculture, Bengal, on Settlements and Land Records for the year ending 30th September 1904. F'cap. Paper cover. As. 8 (2s).
An account of the Research work in Indigo carried out at Dalsing Sarai Research Station (under subsidy of the Government of Bengal) from 1903 to March 1904. by W. Popplewell Bloxam and H. M. Leake. F'cap. board. Paper cover. Re. 1 (4s.).
Report on an inquiry into the state of the Tasar Silk Industry in Bengal and the Central Provinces of India. By N. G. Mukerjee. F'cap. Paper cover. Re. 1. (2s.)

NEW PUBLICATIONS ISSUED BETWEEN 1ST OCTOBER 1904 AND THE 31ST MARCH 1905.

APPOINTMENT DEPARTMENT

Quarterly Civil List of Bengal, corrected up to 1st January 1905. Rs. 3. (4s.)

FINANCIAL DEPARTMENT.

Report on the Road and Public Works Cess Operations of the Lower Provinces for the official year 1903-04. F'cap. Paper cover Re. 1. (2s.)

Report on the Administration of the Excise Department in the Lower Provinces of Bengal for the year 1903-04. F'cap. Paper cover. Re. 1. (2s.)

GENERAL DEPARTMENT.

Report on Inland Emigration during the year ending 30th June 1904. F'cap. Paper cover. As. 8. (1s.)

General Report on Public Instruction in Bengal for 1903-04. F'cap. Paper. Re. 1-5-3. (2s.)

List of Officers in the Subordinate Educational Service, Bengal, corrected up to 1st January 1905. As. 8. (1s.)

Bengal Administration Report, 1903-04. F'cap. Cloth. Rs. 3. (6s.)

JUDICIAL DEPARTMENT.

Annual Report on the Police Administration of the Town of Calcutta and its suburbs for the year 1903. F'cap. Paper cover. Re. 1. (2s.)

LEGISLATIVE DEPARTMENT.

The Chota Nagpur Landlord and Tenant Procedure Act (Bengal Act I of 1879, modified) with notes by H. W. O. Carnduff. Re. 1-8. (2s.)

The Indian Emigration (Amendment) Act 1904 (XII of 1904) in Bengali, Hindi or Uriya. 6p. (1s.)

The Indian Stamp (Amendment) Act 1904 (XV of 1904) in Bengali, Hindi or Uriya. 1s. (1s.)

The Local Authorities Loans Act 1905. (I of 1905) in Bengali, Hindi or Uriya. 6p. (1s.)

The Indian Universities Validation Act 1905 (II of 1905) in Bengali, Hindi or Uriya. 6p. (1s.)

The Stage Carriages Act 1861 (XVI of 1861 as modified up to 1st February 1898, in Hindi. As. 3. (1s.)

The Indian Evidence Act 1872, (I of 1872) as modified up to 1st November 1902, in Hindi. As. 14 (1s.)

The Indian Explosives Act 1884 (IV of 1884) as modified up to 1st December 1903, in Hindi. As. 2. (1s.)

The Bengal Tenancy Act 1885 (VIII of 1885) as modified up to 1st December 1903, in Uriya. Re. 1 (2s.)

The Indian Railway Act 1890. (IX of 1890) as modified up to 1st May 1896 and corrected up to the 1st December 1903, in Hindi. As. 13. (1s.)

MUNICIPAL DEPARTMENT.

List of qualified Medical Practitioners in Bengal, 1904. Royal 8vo. Boards. Paper cover. Re. 1. (2s.)

Resolution reviewing the working of Municipalities in Bengal during the year 1903-04. F'cap. Paper cover. Re. 1. (2s.)

Resolution reviewing the Reports on the working of District Boards in Bengal during the year 1903-04. F'cap. Paper cover. Re. 1. (1s.)

PUBLIC WORKS DEPARTMENT.

Conditions under which Electric Meters and other instruments will be accepted for testing in the Government Electrical Laboratory, Calcutta, and Table of Fees. F'cap. Paper cover. 1s. (1s.)

Revenue Report of the Government of Bengal, Public Works Department, Irrigation Branch, for the year 1903-04. F'cap. Boards. Paper cover. Re. 1. (3s.)

Classified List and Distribution Return of Establishment of the Public Works Department, Bengal, corrected up to 31st December 1904. Re. 1. (2s.)

Resolution on the Embankment and Drainage Reports of the Government of Bengal, Irrigation Department, for the year 1903-04. F'cap. Boards. Paper cover. Re. 1. (2s.)

REVENUE DEPARTMENT.

Annual Report on the Survey Operations in Bengal during 1903-04 (from October 1903 to September 1904). F'cap. Paper cover. Re. 1. (2s.)

Final Report on the Survey and Settlement Operations in the Saran District, 1893 to 1901, by J. H. Kerr, Esq., Settlement Officer, North Bihar. F'cap. Boards, paper cover. Re. 1-8. (6s.)

Final Report on the Survey and Settlement Operations in the Darbhanga District, 1896 to 1903, by J. H. Kerr, Esq. F'cap. Boards, paper cover. Re. 1. (5s.)

Abstract of the Indian Factories Act, 1881, in sheet form, for hanging up in Factories. In English and Hindi and Urdu. As. 4. (1s.) unmounted. Re. 1-4 mounted

Agricultural Statistics of the Lower Provinces of Bengal for 1903-04. F'cap. Paper cover. As. 8. (1s.)

Report on Wards and attached Estates in the Lower Provinces for the year 1903-04. F'cap. Paper cover. Re. 1-8. (2s.)

Report on the Land Revenue Administration of the Lower Provinces for the year 1903-04. F'cap. Paper cover. Re. 1. (2s.)

STATISTICAL DEPARTMENT.

The Trade of Bengal with Nepal, Thibet, Sikkim and Bhutan for the year ending March 1904. Boards. Paper cover. Re. 1-2. (2s.)

Report on the Trade carried by Rail and River in Bengal in the official year 1903-04. F'cap. Board. Paper cover. Re. 1. (5s.)

OLDER PUBLICATIONS.

A General Catalogue of all Government Publications (corrected up to 30th June 1901) may be obtained *gratis* on application to the Officer in charge, Bengal Secretariat Book Deptt.

Publications for sale at the office of the Chief Inspector of Explosives with the Government of India.

Rules for the manufacture, possession and sale of explosives issued by each of the Local Governments and Administrations. Price 12s.

Rules for the transport and importation of explosives issued by the Government of India. Price 12s.

Rules for the transport and importation of explosives at the Port of Calcutta. Price 4a.

Publications for sale at the Custom House, Calcutta.

Review of the Maritime Trade of Bengal and its Chief Port (Calcutta) for the year 1903-04. Price Re. 1.

Annual Statement of the Sea-borne Trade and Navigation of Bengal, Foreign and Coasting combined in one volume, for the year 1903-04. Price Rs. 6.

Previous years' volumes can be obtained at the same price.

GOVERNMENT PUBLICATIONS FOR SALE

BY THE SUPERINTENDENT OF GOVERNMENT PRINTING, INDIA, 8 HASTINGS STREET, CALCUTTA.

A General Catalogue of all Government Publications may be obtained gratis from the Government Central Press, Calcutta.

All books published by the Superintendent of Government Printing, India, can be purchased, either directly or through the following or any other booksellers:—

AGENTS IN EUROPE.

Mr. E. Arnold, 41 and 43 Maddox Street, Bond Street, W. London.
Messrs. Constable & Co., 16 James Street, Haymarket, W., London.
Messrs. Kegan Paul, Trench, Trubner & Co., Charing Cross Road, London.
Mr. Bernard Quaritch, 15 Piccadilly, London.
Messrs. P. S. King and Son, 2 & 4 Great Smith Street, Westminster.
Messrs. H. S. King & Co., 65 Cornhill, and 9 Pall Mall, London.
Messrs. Grindlay & Co., 54 Parliament Street, London, S. W., Agents for the sale of the Army List.
Mr. Otto Harrassowitz } Leipzig.
Mr. Karl Hiersemann }
Messrs. R. Friedlander & Sohn, Berlin, W. N. Carlstrasse, 11
Mr. Ernest Leroux, 28 Rue Bonaparte, Paris.
Mr. Martinus Nijhoff, Hague, Holland.
Mr. B. H. Blackwell, 50 & 51 Broad Street, Oxford.
Messrs. Deighton Bell & Co., Cambridge.

AGENTS IN INDIA.

Messrs. Thacker, Spink & Co., Calcutta and Simla.
Messrs. Newman & Co., Calcutta.
Messrs. R. Cambray & Co., Calcutta.
Messrs. S. K. Lahiri & Co., Calcutta.
Eveyln, Hubert, & Co.,* 149, Dhurmotollah Street, Calcutta.
Messrs. Higginbotham & Co., Madras.
Messrs. V. Kalyanarama Iyer & Co., Madras.
Messrs. G. A. Natesan & Co., Madras.
Messrs. Thacker & Co., Ld., Bombay.
Messrs. A. J. Combridge & Co., Bombay.
Messrs. D. B. Taraporevala, Sons & Co., Bombay
Mrs. Radhabai Atmaram Sagoon, Bombay.
Superintendent, American Baptist Mission Press, Rangoon.
Rai Sahib M. Gulab Singh & Sons, Mufid-i-Am Press, Lahore.
Mr. N. B. Mathur, Superintendent, Nazair Kanun Hind Press, Allahabad.
Manager, Educational Book Depôts, Nagpur and Jubbulpore.*
Manager of the Imperial Book Depot, 63 Chandny Chauk Street, Delhi.*
Manager, "East Coast News," Vizagapatam.*
Manager, "The Agra Medical Hall and Co-operative Association, Limited" (Successors to A. John & Co., Agra).*
Mr. T. K. Seetharama Aiyar, Kumbakonam.*
Lala Debi Prasad, Vakil and Manager of Law Press, Cawnpore.*
Superintendent, Basel Mission Book and Tract Depository, Mangalore.*
Messrs. P. Varadachary & Co., Madras.*
Mr. Sunder Pandurang, Bombay.*
The Mercantile Mission Branch, Calicut.*
H. Dowman, Esq. (late Extra Assistant Superintendent, Survey of India), Allahabad.*
H. Liddell, Esq., Printers, etc., 7, South Road, Allahabad.*

* Agents for sale of the Legislative Department publications.

NOTICE.—Books and Acts required for private use only can be purchased. Applications should be accompanied by a remittance, unless it is wished that the books should be sent by value-payable post, in which case, besides the ordinary postage, an additional charge is made for registration and commission.

Books and Acts required for the public service should be obtained through Local Governments to whom the applicant is subordinate.

Application for Government publications which are no longer in print should be made to the Agents of the particular Government under whose orders they were originally issued.

(The amounts within parentheses are for packing and postage.)

List of New Books published during the Current Quarter

LEGISLATIVE DEPARTMENT.

The Bengal Code, Vol. II, 3rd Edition, 1905. (Now ready). Cloth. Super-Royal 8vo. Rs. 6 or 9s. (10s.)
The Ajmere Code, 3rd Edition, 1905. Cloth. Super-Royal 8vo. Rs. 2-8 or 3s. 9d. (7s.)
Act XIII of 1885, The Indian Telegraph Act, 1885, as modified up to 1st March 1905. 5s. (1s.)
Act III of 1900, The Prisoners Act, as modified up to 1st March 1905. 6s. 6p. (1s.)

HOME DEPARTMENT.

Scientific Memoirs by Officers of the Medical and Sanitary Departments of the Government of India—Oriental or Delhi Sore by Captain S. P. James, M.B., I.M.S., New series, No. 13. Super-Royal 4to. Limp cover. 10s. or 1s. (3s.)
Scientific Memoirs by Officers of the Medical and Sanitary Department of the Government of India—On a parasite found in the White Corpuscles of the blood of dogs by Captain S. P. James, M.B., I.M.S. New series No. 14. Super-Royal 4to. Limp cover. 10s. or 1s. (3s.)
Imperial Library List of Additions, Third Series, with subject index, March 1905. No. 7. Super-Royal 4to. Paper cover. 8s. or 9d. (2s.)
The Private Diary of Ananda Ranga Pillai, Vol. I, 1736 to 1746—Dubash to Joseph Francois Dupleix, Knight of the Order of St. Michael, and Governor of Pondichery.—A record of Matters, Political, Historical, Social, and Personal, from 1736 to 1761. Translated from the Tamil by the order of the Government of Madras and Edited by Sir J. Frederick Price, K.C.S.I., late of the I.C.S., assisted by R. Rangachari, B.A. Rs. 3 or 4s 6d. (7s.)
Quarterly List of Officers in the Department of the Government of India, April to June 1905. Foolscap, paper cover. 4s. or 5d. (1s.)

Annual Report of the National Association for Supplying Female Medical Aid to the Women of India for the year 1904. (20th issue.) Royal 8vo. Limp cover. Re. 1 or 1s. 6d. (4a.)
Fauna of British India, Butterflies. Vol. I, by Colonel C. T. Bingham. Royal 8vo. cloth. Rs. 15 or 22s. 6d. (7a.)

REVENUE AND AGRICULTURE DEPARTMENT.

Progress Report of Forest Administrations in the Andamans for 1903-04. Foolscap. Paper cover. 8a. or 9d. (2a.)

FOREIGN DEPARTMENT.

Report on the Political Administration of the territories within the Central India Agency for 1903-04. (Selection No. CCCCXVI.) Foolscap, board. Re. 1 or 1s. 6d. (2a.)
Report on the working of the Thagi and Dakaiti Department for 1903. (Selection No. CCICCI.) Foolscap, paper cover. 9a. or 11d. (1a.)
Administration Report on the Persian Gulf Political Residency and Maskat Political Agency for 1903-04. (Selection No. CCCXI.) Foolscap, board. Re. 1 or 1s. 6d. (2a.)
Administration Report of the Baluchistan Agency for 1903-04. (Selection No. CCCCXVII. Foolscap. Board., Re. 1-12 or 2s. 8d. (3a.)
Report on the Political Administration of the Rajputana States and Ajmere-Merwara for 1903-1904 (Selection No. CCCCXVIII.) Foolscap, board. Rs. 2 or 3s. (6a.)
Report on Sanitation, Dispensaries and Jails in Rajputana for 1903 and on Vaccination for the year 1903-1904. (Selection No. CCCCXIV.) Foolscap, board. Re. 1 or 1s. 6d. (4a.)

FINANCE DEPARTMENT.

Financial Statement for 1904-05 and 1905-06. Foolscap, board. Re. 1-8 or 2s. 3d. (6a.)

COMPTROLLER-GENERAL.

Appropriation Report on the Accounts of the Government of India for 1903-04 by A. F. Cox, Esq. Foolscap. Board. 8a. or 9d. (6a.)

STATISTICAL DEPARTMENT.

Sea-Borne Trade and Navigation Accounts of British India for the month of February 1905. No. 11 of 1904-05. Royal 8vo. Stitched. 8a. or 9d. (2a.)
Accounts of the External Land Trade of British India for the month of December 1904, No. 9 of 1904-05. Royal 8vo., stitched. 8a. or 9d. (2a.)
Statistics of cotton spinning and weaving in the Indian Mills in January 1905 and in the ten months, April 1904 to January 1905, compared with the corresponding period of 1902-03 and 1903-04. Royal 8vo., stitched. 2a. or 2d. (1a.)
Statistics of Cotton Spinning and Weaving in the Indian Mills in February 1905 and in the 11 months, April 1904 to February 1905, compared with the corresponding period of 1902-03 and 1903-04. Royal 8vo. Stitched. 2a. or 2s. (1a.)
Accounts relating to the Trade carried by rail and river in India in the quarter and in six months ending September 1904, compared with the corresponding periods of the years 1902 and 1903. No. 2 of 1904-05. Foolscap, paper cover. 8a. or 9d. (3a.)
Sea-Borne Trade and Navigation Accounts of British India for the month of March 1905. No. 12. Royal 8vo. Stitched. 8a. or 9d. (2a.)
Accounts relating to the Sea-borne Trade and Navigation of British India for the calendar year 1904, compared with the years 1902 and 1903. 8a. or 9d. (1a.)

MILITARY DEPARTMENT.

The Quarterly Indian Army List for April 1905, New series, No. 4. Royal 8vo., paper cover Rs. 3 or 4s. 6d. (8a.)
India Military Budget Estimate for the year 1905-1906. Foolscap, board. Rs. 1-8, or 2s. 3d. (3a.)

RAILWAY BOARD.

Report (dated 30th December 1903) on the Organisation and Working of Railways in America by Neville Priestley, Esq. Foolscap. Paper cover. Rs. 3 or 4s. 6d. (8a.)

List of Books published from October 1904 to March 1905.

LEGISLATIVE DEPARTMENT.

The Indian Registration Act, 1877 (III of 1877), as modified up to 1st April, 1903, with footnotes brought down to 1st November, 1902. 11a. (2a.)
The Indian Emigration Act, 1883 (XXI of 1883), as modified up to 1st December, 1902. 11a.
Act XXX of 1852. An Act for the Naturalization of Aliens, as modified up to 1st December, 1902. 2a. (1a.)
Act V of 1861. The Police Act, 1861. As modified up to 7th March, 1903. 7a. 6p. (1a.)
Act X of 1873. The Indian Oaths Act. As modified up to 1st February, 1903. 3a. 6p. (1a.)
Act XIX of 1883. The Land Improvement Loans Act, 1883. As modified up to 1st February, 1903. 2a. 6p. (1a.)
Act XII of 1884. The Agriculturists' Loans Act, 1884. As modified up to the 15th December, 1896, and with footnotes brought down to the 1st February, 1903. 2a. (1a.)
Act IX of 1890. The Indian Railways Act, 1890. As modified up to 1st May, 1896, with footnotes brought down to 1st January, 1903. 15a. (3a.)
Act XXXIV of 1850. The State Prisoners Act, 1850. As modified up to 30th April, 1903. 2a. 6p. (1a.)
Act XXXIV of 1858. The Lunacy (Supreme Courts) Act, 1858. As modified up to 30th April, 1903. 4a. 3p. (1a.)
Act XXXV of 1858. The Lunacy (District Courts) Act, 1858. As modified up to 30th April, 1903. 2a. 3p. (1a.)
Act V of 1873. The Government Savings Banks Act, 1873. As modified up to 1st April, 1903. 3a. 6p. (1a.)
Act II of 1886. The Indian Income Tax Act 1886. As modified up to 1st April, 1903. 8a. (1a. 6p.)
Act I of 1878. The Opium Act, 1878. As modified up to 1st December, 1896, with footnotes brought down to 1st March, 1903. 5a. 6p. (1a.)
Act III of 1865. The Carriers Act, 1865. As modified up to 31st May, 1903. 3a. (1a.)
Act IX of 1897. Amending the law relating to Government and other Provident Funds. As modified up to 1st May, 1896, with footnotes brought down to 1st January, 1903. 1a. 6p. (1a.)
Act No. XII of 1855 (Legal Representatives' Suits), as modified up to 1st November, 1904. 1a 6p. (1a.)
Act No. IX of 1860 [Employers and Workmen (Disputes)], as modified up to 1st December, 1904. 1a. 6p. (1a.)
Act No XXI of 1860 (Societies Registration), as modified up to 1st December, 1904. 2a. 6p. (1a.)
The Punjab Laws Act, 1872 (IV of 1872), as modified up to 1st November, 1904. 7a. 1a. 1a.)
The Indian Christian Marriage Act, 1872 (XV of 1872), as modified up to 1st December, 1904. 10a. (1a.)
Act No. X of 1891 (Indian Penal Code Amendment), as modified up to 1st December 1904 1a. (1a.)
The Indian Petroleum Act, 1899 (VIII of 1899), as modified up to the 1st December 1904. 7a. (1a.)
The Indian Extradition Act, 1903 (XV of 1903), as modified up to 1st December, 1904. 5a. 6p. (1a.)

Act V of 1869. The Indian Articles of War, as modified up to 1st December 1904. Royal 8vo. Stitched. Re. 1 2s. (3s.)

Act XV of 1881. The Indian Factories Act, 1881, as modified up to the 1st December 1904. Royal 8vo. Stitched. 5a. 6p. (1a. 6p.)

Act V of 1883. The Indian Merchant Shipping Act, 1883, as modified up to the 1st December, 1904. Royal 8vo. Stitched. 6a. (1a.)

The Central Provinces Code, 3rd Edition, 1905. Cloth. Super-Royal 8vo. Re 4 or 6s. (6s.)

The Bengal Code, Volume I, 3rd Edition, 1905 (Now ready). Cloth. Super-Royal. Price all 5 Volumes Rs. 30 or 45s. Vol. I. Rs. 6 or 9s. (8s.)

The Public Gambling Act, 1867 (III of 1867), as modified up to the 1st January, 1905. As. 4 or 5d. (1a.)

The Indian Contract Act, 1872 (Act IX of 1872), as modified up to the 30th June, 1901. Royal 8vo. Stitched. Re. 1-6s. (2s.)

HOME DEPARTMENT.

Scientific Memoirs by Officers of the Medical and Sanitary Departments of the Government of India. On a parasite found in persons suffering from enlargement of the spleen in India, by Lieut. S. R. Christophers, M.B., I.M.S, New series, No. 11. Super-Royal 4to. Limp cover. Rs. 2 or 3s. (3s.)

Report on the Administration of Criminal Justice in Lower Provinces of Bengal during the year 1903. Foolscap. Paper cover Re. 1. or 1s. 6d. (2s.)

Imperial Library List of Additions, September to December 1904, Nos. 1—6. Foolscap. Paper cover. As. 6 or 9d. (2s.) each.

Report on the Administration of Civil Justice in the Lower Provinces of Bengal during the year 1903. Foolscap. Paper cover. Re. 1 or 1s. 6d. (3s.)

Scientific Memoirs by Officers of the Medical and Sanitary Departments of the Government of India on the Morphology, Teratology and Declinism of the Flowers of Cannabis By Major D. Prain, M.B., I.M.S. New series. No. 13. Super-Royal 4to. Limp cover. 14s. 1s. 4d. (3s.)

Quarterly List of Officers in the Departments of the Government of India, October to December 1904, January to March 1905. Foolscap, Paper cover As. 4 or 5d. (1a.)

Annual Report of the Sanitary Commissioner with the Government of India, 1903, with Appendices and Returns of sickness and Mortality among European Troops, Native Troops and Prisoners in India for the year. Foolscap. Board. Rs. 3 or 4s. 6d. (3s.)

Report of the Indian Police Commission, 1902-03. Foolscap. Board. With appendices Re. 1-8s. (7s.); without appendices, Re. 1 (6s.)

DEPARTMENT OF REVENUE AND AGRICULTURE.

Report of the Chief Inspector of Mines in India for the year ending 31st December 1903. Foolscap. Board. As. 12 or 1s. 2d. (2s.)

Review of Forest Administration in British India for the year 1902-03. Foolscap. Paper cover. Re. 1-11 or 2s. 6d. (3s.)

Annual Administration Report of the Civil Veterinary Department in India for the official year 1903-04. Foolscap. Paper cover. 12s. or 1s. (2s.)

Records of the Botanical Survey of India, Vol. IV, No. I. (An Epitome of the British Indian Species of impatients by Sir J. D. Hooker, G.C.S.I., C.B., F.R.S. Part I. Royal 8vo. Paper cover. 3s or 4d. (1s.)

Records of the Botanical Survey of India, Vol III, No. 2. The vegetation of the districts of Hughli, Howrah and the 24-Parganas, by D. Prain, Esq. Re. 1-12, or 2s. 8d., (3s.)

Rules framed under section 20 of the Indian Mines Act, 1901 (VIII of 1901) prescribing the Compulsory submission of Annual returns of output and labour of Indian Mines. Foolscap. 0-0-6. (1a.)

Rules for the Lease or Sale of Waste Lands in India. 1904 edition. Foolscap. Board. Rs. 4 or 6s. (8s.)

Archæological Survey of India. Annual Report, 1902-03. Super-Royal. Cloth. Rs. 20 or £1 10s. (Rs. 1 2s.)

Annual Report of the Board of Scientific Advice for India for the year 1903-04. Foolscap. Paper cover. 6s. or 7d. (2s.)

List of Officers in the Department of Revenue and Agriculture, Government of India, and the Departments subordinate to it, corrected to 1st January 1905. As. 8 or 8d. (2s.)

FOREIGN DEPARTMENT.

Report on the Political Administration of the Territories within the Central India Agency for 1902-03. Foolscap Board. Re. 1 or 1s 6d. (3s.)

Report on the Administration of the Civil and Military Station of Bangalore for the year 1902-03. 8a. or 9d. (2s.)

Report on the Administration of Berar for the year 1902-03. Foolscap. Board. Rs. 2 or 3s. (2s.)

Report on the Administration of the Civil and Military Station of Bangalore for the year 1903-04. Foolscap. Limp cover. 8a. or 9d. (2s.)

FINANCE DEPARTMENT.

Report on the Administration of the Mint at Bombay and Calcutta for the year 1903-04. Foolscap. Paper cover. Re. 1 or 1s. 6d. (2s.)

Statistics Compiled from the Finance and Revenue Accounts of the Government of India. Receipts and Disbursemets of Home and Indian Accounts from 1st April 1895 to 31st March 1903. Foolscap. Board. Rs. 2 or 3s. (9s.)

List of Officers in the Finance and Commerce Department, corrected to 1st October, December 1904, January and February 1905. Royal 8vo. Paper cover. 4a. or 5d. (1a.)

COMPTROLLER-GENERAL.

Finance and Revenue Accounts of the Government of India for the year 1903-04. Foolscap. Board. Rs. 2. or 3s. (8s.)

STATISTICAL DEPARTMENT.

Statistics of Cotton Spinning and Weaving in the Indian Mills in June 1904 and in the three months, April to June 1904, compared with the corresponding period of 1902 and 1903, No. 5 of 1904-05. Royal 8vo. Stitched. 2a. or 2d. (1a) each.

Trade and Navigation Accounts of British India for the months of August, September and October 1904. Nos. 5, 6 and 7 of 1904-05. Royal 8vo. Stitched. 8a. or 9d. (2a.) each.

Accounts of the External Land Trade of British India for the months of June, July and August 1904, Nos. 3, 4 and 5 of 1904-05. Royal 8vo. Stitched. 8a. or 9d. (2a.) each.

Statistics of Cotton Spinning and Weaving in the Indian Mills in July, August, September, October, November, December 1904. Royal 8vo. Stitched. 2a. or 2d. (1a.) each.

Judicial and Administrative Statistics of British India for 1902-03 and preceding years. 8th issue. Foolscap. Board. Rs. 2 or 3s. (10s.)

Accounts of the French Possessions in India in the year ending 31st March 1904 and the four preceding years. Foolscap. Paper cover. 2a. or 2d. (1a.)

Accounts of the Trade of Aden in the year ending 31st March 1904 and the four preceding years. Foolscap. Paper cover. 10a. (1s.)

Area and yield of certain principal crops in India. Sixth issue. Foolscap. Paper cover. 5a. or 6d. (2a.)

Sea-Borne Trade and Navigation Accounts of British India for the months of November, December 1904, January 1905. Nos. 8, 9 and 10 of 1904-05. Royal 8vo. Stitched. 8a. or 9d. (2a.)

Accounts of the External Land Trade of British India for the month of September, October 1904. Nos. 6, 7 and 8 of 1904-05. Royal 8vo. Stitched. 8a. or 9d. (2a.)

Agricultural Statistics of India for the years 1898-99 to 1902-03 in two Volumes. Foolscap. Board. Both Volumes. Rs. 3-8*a*. or 5*s*. 3*d*. (12*a*.)

Accounts relating to the trade carried by Rail and River in India in the quarter ending June 1904, compared with the corresponding period of the years 1902 and 1903. No 1 of 1904-05. Foolscap. Paper cover. 8*a*. or 9*d*. (8*a*.)

Financial and Commercial Statistics of British India, II issue, 1904. Super-Royal, Paper cover. Rs. 4 or 6*s*. (12*a*.)

Tariff Shcedules, 1905. Royal 8vo. Stitched 6*a*. or 7*d*. (1*a*.)

Annual Statement of the Coasting Trade and Navigation of British India in the year ending 31st March 1904. Super-Royal. Board. Rs. 2 or 3*s*. (7*a*.)

ACCOUNTANT-GENERAL.

History of Services of Gazetted and other Officers serving under the Government of Bengal, corrected to 1st July 1904. In two parts. Royal 8vo. Board. Rs. 5 or 7*s*. 6*d*. (12*a*.)

MILITARY DEPARTMENT.

Return of Wreck and Casualties in Indian Waters, 1902-03. Foolscap. Board. Re. 1 or 1*s*. 6*d*. (3*a*).

Class Hand Books for the Indian Army—Mappilas or Moplahs, by Major P. Holland Pryor. Royal 8vo. Board. Re. 1-4 or 1*s*. 11*d*. (5*a*.)

Hand Book for the Indian Army—Jats, Gujars, and Ahirs, by Major A. H. Bingley. Royal 8vo. Board. Re. 1 or 1*s*. 6*d*. (5*a*.)

Classified List and Distribution Return of the Establishment of the Military Works Services corrected up to 31st December 1904. Royal 8vo. Paper cover. 4*a*. or 5*d*. (1*a*.)

RAILWAY BOARD

Administration Report of the Telegraph Department for 1903-04. Foolscap. Paper cover. 8*a*. or 6*d*. (2*a*.)

Public Works Department Classified List of the Subordinate Establishment, corrected to 30th June 1904. Royal 8vo. Paper cover. 4*a*. or 5*d*. (1*a*.)

Public Works Department Classified List and Distribution of Establishment corrected up to 31st December 1904. Super-Royal 8vo. Paper cover. Rs. 2 or 3*s*. (4*a*.)

Selections from the Records of the Government of India in the Public Works Department, No. CCXXXVIII.—Relative Merits of Broad and Metre Gauge Lines of Railway. Foolscap. Board. 4*a*. or 5*d*. (1*a*. 6*p*.)

Classified List of the Subordinate Establishment corrected up to 31st December 1904. Royal 8vo. Paper. 4*a*. or 5*d*. (1*a*.)

List of new books for sale at Thomason College, Roorkee which were not advertised before.

Roorkee Treatise on "Railways," 4th Edition, revised by F. Wolly Dod, M.C.E. Price, Rs. 3 per copy.

Roorkee Treatise on "Irrigation Work." By Lieutenant-Colonel J. Clibborn, I.S.C., R.A., L.C.E., C.I.E. Price, Rs. 9 per copy.

Roorkee Treatise on "Sanitary Engineering." Compiled by Lieutenant-Colonel J. Clibborn, I.S.C., R.A., L.C.E., C.I.E. Price, Rs. 4-8 per copy.

Roorkee Manual of "Applied Mechanics," Volume II. The stability of structures mostly by graphic methods, by Lieutenant-Colonel J. H. C. Harrison, R.E. Price, Rs. 8-2 per copy.

Roorkee Manual of Hydraulics. Price per copy, Re. 1-4. (No. XIX, Elementary Treatise.) By E. F. Tipple, Esq., B.A.

Designs for Wooden Bridges, together with rules for calculating the area of waterway, etc., and Plates. By late Rai Bahadur Kunhya Lal. Price per set, Rs. 4-2

Pamphlet on Examination for Acid Radicals: Tables giving Analysis of Acids. Price per copy, 8*a*.

Pamphlet on Examination for Acid Bases: Tables giving Analysis of Metallic Bases. Price, 8*a*. per copy.

List of New Books available for sale in the College Book Depôt.

Roorkee Treatise on Civil Engineering, Section XIII. Drawing for Engineer students, Part I. By Major E. H. deV. Atkinson, R.E., Principal, Thomason College, Roorkee. Price per copy Rs. 3-2, including packing, postage, etc.

Hand-Book of the Thomason Engineering College, Roorkee, Illustrated. Price Rs. 6-12 per copy, including packing, postage, etc.

A list of new books and periodicals for sale at the Library of the Asiatic Society of Bengal, 57 Park Street, Calcutta.

SOCIETY'S PUBLICATIONS.

Proceedings Nos. 9 and 10, at 8*a*.

BIBLIOTHECA INDICA.

Chaturvarga Chintamani. Vol. IV, Fasc. 3, at 6*a*.
Catasahasrika Prajnaparamita. Vol. II, Fasc. 9, at 6*a*.
Mahabhasyaprodipoddyota. Vol. III, Fasc. 1, at 6*a*.
Suddhi Kaumudi. Fasc. 3, at 6*a*.
Vidhana Parijata. Vol. I, Fasc. 7, at 6*a*.

List of books published by the Meteorological Department from 1st October 1904 to 31st March 1905.

Monthly Weather Review, April to September 1904. (Illustrated by 6 plates.) Quarto. Paper cover. Re. 1 per month.
Indian Meteorological Memoirs, Vol. XVI. Part II. By Sir John Eliot. Quarto. Paper cover. Rs. 3.

List of Books published by the Meteorological Department during the current quarter.

Monthly Weather Review, October 1904 (Illustrated by 6 plates.) Quarto. Paper cover. Re. 1.
Indian Meteorological Memoirs. Vol. XVI. Part II. By Sir John Eliot. Quarto Paper cover. Rs. 3.
Annual Summary of the Monthly Weather Review, 1903. (Illustrated by 6 plates.) Quarto. Paper cover. Rs. 3.

List of new books published by the Geological Survey of India during the week endin, 22nd April 1905.

Records of the Geological Survey of India, Vol. XXXII, Part II. Re 1.
Memoirs of the Geological Survey of India Palæontologia Indica. New Series. Vol. II. Memoir No. 2. Re. 1.

APPENDIX TO

The Calcutta Gazette.

WEDNESDAY, MAY 31, 1905.

NOTICES TO MARINERS.

THE following Notices are published for general information.

W. A. INGLIS,
Secretary, Marine Department.

CALCUTTA, *the 29th May 1905.*

AUSTRALIA, SOUTH—GULF ST. VINCENT.

Port Adelaide river—Two Warping Beacons placed.

No. 171 (first publication).—The President of the Marine Board, Port Adelaide, has given notice (No. 9 of 1905) that two Warping Beacons have been placed on the south side of the Jervois Bridge on the west bank of the river—one opposite the entrance to the Canal and the other near the Oyster Beds.

These Beacons are not for vessels to moor to, but for warping purposes only.

This affects Admiralty Chart No. 1750.

AUSTRALIA, SOUTH—GREAT AUSTRALIAN BIGHT.

Fowler's bay—An ordinary Jetty light exhibited.

No. 172 (first publication).—The President of the Marine Board, Port Adelaide, has given nctice (No. 11 of 1905) that on and after April 22nd, 1905, an ordinary Jetty light will be exhibited from the end of Fowler's Bay Jetty.

This affects Admiralty Chart No. 1061.

AUSTRALIA.—QUEENSLAND

Port Douglas—Directions to enter the New Channel.

No. 173 (first publication).—With reference to Notice to Mariners No. 93, dated 24th March 1905, issued by this office, the Port Master, Brisbane, has given further notice (No. 3 of 1905) that the directions to enter the New Channel into Port Douglas state that the marks and lights bear in line N. E. by N. ½ N. and N. ½ E., respectively. These bearings from seaward should read S.W. by S. ½ S. and S. ½ W., respectively.

Australia Directory, vol. 2; Admiralty Chart No. 2924 (old).

INDIA, WEST—Malabar coast.

Talayi—Small spherical buoy removed for overhaul.

No. 174 (first publication).—The Presidency Port Officer, Madras, has given notice (No. 19 of 1905) that the small spherical buoy marking the pinnacle rock off the Sub-Port of Talayi will be removed on the 25th May 1905 for overhaul, and will be replaced about the 1st October 1905, when the working season again commences.

BAY OF BENGAL—Chittagong coast.

Kurnafuli river—Depth of water in the channels.

No. 175 (first publication).—The Port Officer, Chittagong, has given notice that the following depth of water was found in the river channels by soundings taken on the 24th May and reduced to zero:—

	Ft.	in.
Track No. 1—Outer bar—		
Disc on diamond	14	0
Track No. 2—Inner bar—		
Disc on diamond	11	6
Batten beacon on pillar	12	0
Track No. 3—		
Triangle on cross and ball	16	6
Track No. 4—Guptakhally crossing—		
Tripod on diamond	18	0
New mark—		
Cross and ball on with diamond passing close to Gupta point ...	21	6

N.B.—There is no doubt that Gupta point is being washed away and that the shoal on the opposite bank is extending.

KOREA, WEST COAST—Ping Yang inlet.

Chogon dogu—Extension of shoal.

No. 162 (second publication).—The British Admiralty has given notice (No. 325 of 1905). that the Master of the S.S. *Tatsu Maru* reports that the 2-fathom shoal to the south-westward of Chogon dogu, above Chel tau anchorage, Ping yang inlet, and shown on the Chart at a distance of $1\frac{4}{10}$ miles N. 27° E. from Gai gan misaki, has extended in a S. 22° E. direction for about 4 cables, the depths over the extension being from 1½ to 2 fathoms.

Approximate position on Chart 1656, lat. 38° 40′ N., long 125° 36′ E.

(*Variation 4° Westerly in 1905.*)

This Notice affects the following Admiralty Charts:—Approaches to Ping Yang inlet, No. 1257; Ping Yang inlet, No. 1656: Also, Sailing Directions for Korea, &c., 1904, page 43.

PACIFIC OCEAN—The Philippine islands—Leite, Samar Luzon.

Janabatas channel—Higunum island and Port Sisiran—Rocks reported.

No. 163 (second publication).—The British Admiralty has given notice (No. 327 of 1905) that the undermentioned rocks are reported to exist in the following positions in the vicinity of the Philippine islands:—

1. Leite island, north coast, Janabatas channel. A rock, with a depth of 6 feet over it, is reported in a position from which the eastern extremity of Navahay island bears S. 29° W., distant 5 cables, and the northern extremity of the same island S. 89 W.

   Approximate position, lat. 11° 26½′ N., long. 124° 54½′ E.

2. Samar island, east coast. A sand cay, with submerged reefs and heavy breakers, extending for a considerable distance from its north-west and south-east sides, is reported to be situated about 5 miles S. 65° E. from Higunum island.

   Approximate position, lat. 12° 21′ N., long. 125° 31′ E.

   The coast in this locality is said to be inaccurately shown on the Charts.

3. Luzon, east coast. A rock, on which the sea breaks heavily, is reported in mid-channel between Laja island and Tinajuagan point at the entrance to port Sisiran.

   Approximate position, lat. 14° 0′ N., long. 123° 41′ E.

(*Variation Nil in 1905.*)

This Notice affects the following Admiralty Charts:—The Philippine islands, No. 943; St. Bernardino and Mindoro straits, No. 2577; San Pedro bay to Libukan islands, No. 2987: Also, Eastern Archipelago, part I, 1902, pages 361, 385, 377.

NEW ZEALAND—South island, east coast.

Weld's anchorage—Beacons removed.

No. 164 (second publication).—The British Admiralty has given notice (No. 332 of 1905) that the two beacons leading to Weld's anchorage, and situated on the southern side of Flaxbourne river, have been removed and will not be re-erected; they have consequently been expunged from the Chart.

Approximate position, lat. 41° 50′ S., long. 174° 12′ E.

This Notice affects the following Admiralty Chart:—Plan of Flaxbourne on Chart No. 2178: Also, New Zealand Pilot, 1901, page 267.

EASTERN ARCHIPELAGO—Sumatra, north-east coast.

Strait of Durian—Wreck in southern approach.

No. 165 (second publication).—The British Admiralty has given notice (No. 337 of 1905) of the existence of a wreck, with two masts above water, in the southern approach to the Strait of Durian, situated at a distance of $2\frac{1}{10}$ miles S. 77° W. from the north point of South Brother island.

Approximate position, lat. 0° 32¾′ N., long. 103° 43¾′ E.

(*Variation 1° Easterly in 1905.*)

This Notice affects the following Admiralty Chart:—Banka strait to Singapore, No. 2757; strait of Durian, No. 2402: Also, China Sea Directory, vol. I, 1896, page 556; and Supplement, 1899, page 41.

EASTERN ARCHIPELAGO.—Borneo, South coast.

Cape Selatan—Intended light.

No. 166 (second publication).—The British Admiralty has given notice (No. 340 of 1905) that it is intended to establish on cape Selatan, at an elevation of 107 feet above high water, a *white group flashing* light of the 5th order showing groups of two short flashes *every ten seconds*, and visible in clear weather from a distance of 16 miles from the bearing of S. 76° E., through east and north, to N. 88° W.; it will be shown from an iron framework support, 108 feet high, painted white. The dwelling will be white with a red roof.

Approximate position, lat. 4° 10½′ S., long. 114° 39′ E.

This light will probably be completed in November, but further notice will be given when it has been established.

(*Variation 2° Easterly in 1905.*)

This Notice affects the following Admiralty Chart:—Eastern archipelago, No. 941b: Also, List of Lights, part VI, 1905, page 95; and Eastern Archipelago, vol. II, 1904, page 266.

EASTERN ARCHIPELAGO—Celebes, Salagar Strait.

Pamatata light—Intended alteration in.

No. 167 (second publication).—The British Admiralty has given notice (No. 341 of 1905) that it is intended to alter Pamatata light from white fixed to *white group flashing* showing two short flashes *every ten seconds.*

Approximate position on Chart No. 941*b*, lat. 5° 43½′ S., long. 120° 29′ E.

Further notice will be given when this alteration has been made.

This Notice affects the following Admiralty Charts:—Eastern Archipelago, No. 941b: Also, List of Lights, part VI, 1905, No. 548; and Eastern Archipelago, part II, 1904, page 348.

CHINA SEA—Singapore.

Fort Canning and Mount Faber—Instructions with regard to Time Balls.

No. 168 (second publication).—With reference to Notice to Mariners No. 152, dated 8th August 1896, issued by this Office, the Master Attendant, Straits Settlements, has given notice,* dated 28th April 1905, that the Time Balls on Fort Canning and Mount Faber are dropped daily at 1 P.M., mean-time of the 105th Meridian: being hoisted five minutes previously. The observatory at Mount Faber from which the Balls are dropped automatically by electricity is in latitude 1° 16′ 08″.33N. and longitude 103° 49′ 23″.86 E. When the Time Balls drop at 1 P.M., the corresponding Greenwich mean-time is 6 hours A.M. Should either of the Time Balls fail to drop correctly, through any cause, the ball in fault will be kept up about five minutes, and then lowered by hand; but it will be again hoisted about five minutes before 2 o'clock. When the Time Ball fails to act, or is under repair, the flag W will be hoisted.

An electric time-bell for the use of Shipping has been fitted in the Wharf Superintendent's Office, Tanjong Pagar. This time-signal is in connection with the Observatory Standard Clock and rings automatically at every hour of Greenwich mean-time. Chronometer comparisons may be obtained by applying at the said office.

**N.B.*—This Notice replaces Notice of 1st June 1896.

BAY OF BENGAL.

Caution—Passing a black flat-topped buoy.

No. 169 (second publication).—The Master of the S.S. *Surada* reports that when in latitude 10° 50′ N. and longitude 83° 32′ E. he passed a black flat-topped buoy with an eye-bolt or ring on the top Mariners are hereby warned.

RED SEA.

Caution—Position of water-logged wreck of native dhow.

No. 170 (second publication).—The Master of the S.S. *Gaekwar* reports that on 29th April 1905, he passed water-logged wreck of a native dhow, about 80 feet long, 6 feet out of water aft, and 3 feet forward; right in track of vessels in Red Sea; lat. 27° 02′ N., long. 34° 25′ E., Shadwan light-house bearing N. 38° W. true, 32 miles distance.

Mariners are accordingly warned.

CEYLON, EAST COAST—Trincomali Harbour.

Minden and Grommet Rocks—Buoys marking, at the entrance, withdrawn.

No. 154 (third publication).—The Bombay Government has given Notice (No. 37 of 1905) that the two buoys marking Minden and Grommet Rocks at the entrance of Trincomali Harbour have been withdrawn and will not be replaced.

This Notice affects the following Admiralty Charts:—Trincomali Harbour, No. 816; Trincomali Harbour and Bays No. 815: Also, Bay of Bengal Pilot, 1901, page 113."

ARABIA, NORTH-EAST COAST—Persian Gulf.

Bushire—Regarding certain buoys and beacons in the inner anchorage.

No. 155 (third publication).—With reference to Notice to Mariners No. 428, dated 16th December 1904, issued by this office, the Bombay Government has given further notice (No. 38 of 1905) that the black spar buoy therein mentioned from which single tree bore N. 64° 20′ E. and the red spar buoy from which single tree bore N. 73° E. have both disappeared.

All the remainder of the spar buoys except that from which the single tree bears N. 76° 28′ E. have lost their tops, and are now only plain spars very difficult to pick up.

The red iron pile beacon is leaning considerably to one side, and is liable to be washed away, as also are all the spar buoys.

* *This Notice affects the following Admiralty Chart:—Abu Shahr or Bushire No. 27, and Sailing Directions, Persian Gulf Pilot, Fourth edition, 1898, page 270.*

ARABIA, NORTH COAST—Persian Gulf.

Shatt-al-Arab—Alterations and corrections in the position of buoys at the entrance.

No. 156 (third publication).—In continuation of Notice to Mariners No. 124, dated 20th April 1905, the Bombay Government has given notice (No. 39 of 1905), that the three inner buoys at the entrance to the Shatt-al-Arab river have been moved from the positions in which they were found by R. I. M. S. 'Investigator' as follows:—

No. 1 Buoy N. 65° E. 5¼ cables to Western edge of deep water channel.
No. 2 „ N. 71° E. 7¾ „ „ „ „ „ „ „ „ „
Bar Buoy N. 85° E. 11½ „ „ „ „ „ „ „ „

The positions of all the buoys shown on Admiralty Chart No. 1235 'Mouths of the Euphrates' were found to be incorrect, they now lie in the following positions and depths of water at low water spring tides:—

Outer buoy ... in 16 feet bearing S. 52° E. dist. 15·2 miles from Fao Light.
R. W. V. S. buoy known locally as Lawrence buoy ... in 11 „ „ S. 53° E. „ 11·5 „ „ „ „
No. 1 buoy ... in 10 „ „ S. 60° E. „ 9·35 „ „ „ „
No. 2 „ ... in 9 „ „ S. 65° E. „ 7·7 „ „ „ „
Bar „ ... in 10 „ „ S. 68° E „ 6·3 „ „ „ „

There is a depth of 10 feet immediately outside No. 2 buoy. In addition to the above there are three small red spar buoys which mark the eastern side of the channel, but they are very difficult to pick up, they lie in the following positions:—

Outer spar buoy A in 10 feet S. 81° E. dist. 8 cables from new position of No. 2 buoy.
Middle „ B in 11 „ N. 8° E. „ 5 „ „ „ „ „ „ „
Inner „ C in 11 „ N. 26° W. „ 7½ „ „ „ „ of Bar buoy.

Directions for entering the Shatt-al-Arab river.—Pass a convenient distance westward of the outer buoy and steer N. 60° W. until Lawrence buoy bears N.-N.-W. when shape course to pass close to the westward of it (remembering a depth of 7 feet exists 3 cables from the buoy), when abreast of Lawrence buoy steer to pass one cable eastward of No. 1, No. 2 and the Bar buoys, on reaching the latter shape course for Fao light, situated at the telegraph station easily recognized on account of the size of the buildings, which are the largest on the Turkish side of the river.

The above directions if followed will carry 9 feet least water up to the Lawrence buoy, after that is passed the general depth to the gut off No. 1 is 9 feet, but there are several small lumps of 7 feet, all of which it is impossible to avoid. Abreast of No. 1 the depth is from 17 to 18 feet in mid-channel, the water shoals very rapidly towards the spar buoys where the bottom is fairly hard, but gradually towards the iron buoys where the bottom is very soft. Between No. 2 and the bar buoy there is a small bar of 12 feet, after which good water will be carried up to the deep water off Fao.

All bearings are true.

Approximate position, lat. 29° 50′ N., long. 48° 30′ E.

This Notice affects the following Admiralty Chart:—Mouth of the Euphrates No. 1235; also Persian Gulf Pilot, fourth edition, 1898, page 286."

CHINA SEA—Cochin China.

Lon (Tre) island and Fanthit—Lights exhibited experimentally.

No. 157 (third publication).—With reference to Notice to Mariners No. 253, dated 25th July 1903, issued by this Office, the British Admiralty has given further notice (No. 301 of 1905) that on 15th April 1905, a *white group flashing* light showing groups of *three flashes every fifteen seconds*, will be exhibited experimentally from a grey conical tower, 48 feet high, erected on the south-eastern point of Lon island; the duration of each flash will be under one-tenth of a second and the eclipse between each flash in the group three seconds. The light will be elevated 336 feet above high water, and visible in clear weather from a distance of 24 miles from the bearing of N. 26° E., through north and west, to S. 11° E.

Approximate position, lat. 12° 11¾′ N., long. 109° 19′ E.

Also, that on 1st April 1905, a *white fixed* light, elevated 38 feet above high water, and visible in clear weather from a distance of 8 miles, would be exhibited experimentally

from an iron trellis-work structure placed on the north-east wall of the Custom house at Fanthit, on the east side of the entrance to the river.

Approximate position on Chart No. 1261, lat. 10° 54¾′ N., long. 108° 6¾′ E.

(*Variation 2° Easterly in 1905.*)

This Notice affects the following Admiralty Charts:—China sea, Nos. 2661a, 2660a, and 1263; Saigon river to Kam ranh bay, No. 1261; Fan rang bay to Tong king gulf No. 1342; Kam ranh bay to Vung-ro bay, No. 1008: Also List of Lights, part VI, 1905, Nos. 672, 669a; China Sea Directory, Vol. II, 1898, pages 399, 393.

JAPAN—NAIKAI (INLAND) SEA.

Simonoseki strait—Shoals in Moji ko.

No. 158 (third publication).—The British Admiralty has given notice (No. 303 of 1905) that a recent survey shows that the undermentioned shoals exist in Moji ko in the eastern part of Simonoseki strait:—

a. A shoal head composed of sand and shells, with a depth of 2¾ fathoms over it situated in a position from which Kajiga hana bears N. 57° E., distant 380 yards, and Dan no ura rear light N. 32° W.

b. A shoal head composed of sand and shells, with a depth of 3 fathoms over it, situated in a position from which Kajiga hana bears N. 71° E., distant 420 yards and Dan no ura rear light N. 31° W.

Approximate position, Kajiga hana lat. 33° 57½′ N., long. 130° 57½′ E.

(*Variation 4° Westerly in 1905.*)

This Notice affects the following Admiralty Charts.—Simonoseki strait, Nos. 532, 1578; Moji ko, No. 3114: Also, Sailing Directions for Japan, &c., 1904, page 502.

JAPAN—HONSHU NORTH-WEST COAST—SADO ISLAND.

Futami bay—Buoys established.

No. 159 (third publication).—The British Admiralty has given notice (No. 304 of 1905) that buoys have been established to mark the undermentioned shoals in Futami bay, Sado island, in the following positions:—

a. An iron conical buoy, painted in red and black horizontal bands, and surmounted by a spherical topmark, has been moored in a depth of 2¼ fathoms, at a distance of 2½ miles N. 41° E. from Daiga hana, to mark Daijoji se in approximately lat. 37° 59′ 50″ N., long. 138° 16′ 45″ E.

b. An iron conical buoy, painted black, and surmounted by a cylindrical topmark, has been moored in a depth of 3½ fathoms at low water, in a position from which Gakeno hana bears S. 88° W., distant 6¾ cables, and Daiga hana S. 46° W., to mark the shoal named Nakano se.

c. A similar buoy has been moored in a depth of 3½ fathoms at low water in a position from which Gakeno hana bears N. 58° W., distant 6¾ cables and Daiga hana S. 53° W., to mark Taka se.

Approximate position, Daiga hana, lat. 37° 58′ N., long. 138° 15′ E.

(*Variation 5° Westerly in 1905.*)

This Notice affects the following Admiralty Charts:—Ando Zaki to Otose Zaki, No. 3003; Futami anchorage on Chart No. 3395; Also, Sailing Directions for Japan, &c., 1904, page 670.

EASTERN ARCHIPELAGO—SUMATRA, NORTH COAST—PULO WEH.

Lë Meulè (Tapa Gaja) point—Light established.

No. 160 (third publication).—With reference to Notice to Mariners No. 450, dated 30th December 1904, issued by this Office, the British Admiralty has given further notice (No. 305 of 1905) that a *white flashing* light *every twenty seconds*, thus:—flash *five seconds*: eclipse, *fifteen seconds*, has been established on Lë Meulè (Tapa Gaja) point, the north-

eastern point of Pulo Weh. The light, which is of the 4th order, is produced by acetylene gas.

Approximate position, on Chart No. 219, lat. 5° 53½′ N., long. 95° 21′ E.

This Notice affects the following Admiralty Charts:—Bay of Bengal, No. 70; Bassein river to Pulo Penang, No. 830; Acheh head to Tyingkok bay, No. 2760; Acheh head to Diamond point, No. 219: Also, List of Lights, part VI, 1905, No. 387a; China Sea Directory, vol. I, 1896, page 48; Bay of Bengal Pilot, 1901, page 283.

CHINA, SOUTH-EAST COAST—KUPCHI POINT.

An obstruction reported to the south-eastward.

No. 161 (third publication).—With reference to Notice to Mariners No. 113, dated 4th April 1905, issued by this Office, the British Admiralty has given further notice (No. 315 of 1905) that information has been received through the Board of Trade that the Master of the S.S. *Workfield* reports that, on 24th December 1904, his vessel, drawing 24 feet, struck on some obstruction, probably a rock, south-eastward of Kupchi point in a position from which Black Mountain bore N. 12° W., distant about 4½ miles. This obstruction has been placed on the Chart as a rock having less than 6 feet over it in the above position, and marked P. D.

Approximate position, lat. 22° 48′ N., long. 116° 10′ E.

(*Variation nil in 1905.*)

This Notice affects the following Admiralty Charts:—China Sea, No. 2661b; Hong Kong to Liautung gulf, &c., No. 1262; Hong Kong to the Brothers, No. 1963; Also, China Sea Directory, vol. III, 1904, page 144.

E. J. BEAUMONT, COMDR., R.I.M.,
Port Officer of Calcutta.

REGISTERED No. C209.]

No. 22 of 1905.

SUPPLEMENT TO

The Calcutta Gazette.

WEDNESDAY, MAY 31, 1905.

OFFICIAL PAPERS.

[Non-Subscribers to the GAZETTE *may receive the* SUPPLEMENT *separately on payment of five rupees per annum if delivered in Calcutta, or seven rupees and eight annas if sent by post.]*

CONTENTS.

	Page.
RESOLUTION on the Annual Report on the Police Administration of the Town of Calcutta and its Suburbs for the year 1904	805
Report on the state of the salt market for the fourth quarter of 1904-1905	808
Annual Report of the Royal Botanic Garden, Calcutta, for the year 1904-1905 ..	811
Weather and Crop Report for the week ending the 20th May 1905	815
Prices-current (retail and wholesale) of food-grains and salt in the head-quarters station bazars of the districts of Bengal on the 15th May 1905	820
CIRCULAR and Eastern Canals for the week ending Saturday the 27th May 1905	826
Area leased for Irrigation up to end of April 1905	827
Results of the Meteorological Observations taken at the Alipore Observatory from 21st to 27th May 1905	829
East Indian Railway during the four weeks ending 25th February 1905	830
Bengal Central Railway during the month of March 1905	832
Weekly Return of Traffic Receipts on Indian Railways ...	834

RESOLUTION ON THE ANNUAL REPORT ON THE POLICE ADMINISTRATION OF THE TOWN OF CALCUTTA AND ITS SUBURBS FOR THE YEAR 1904.

No. 1489J.—D.

POLICE.

Dated Darjeeling, the 25th May 1905.

RESOLUTION.

READ—

The Annual Report on the Police Administration of the Town of Calcutta and its Suburbs for the year 1904.

Read also—

The Reports for the two previous years and the orders of Government recorded thereon.

The office of Commissioner of Police was filled by Mr. R. A. D'O. Bignell, the permanent incumbent, for seven months, and by Mr. F. L. Halliday, for five months, during the year under review. Mr Bignell has unfortunately been compelled by the state of his health to avail himself of further leave, and the present report has been submitted by Mr. Halliday as Officiating Commissioner. The force had for seven months the advantage of

the services of Mr. F. C. T. Halliday, as Additional Commissioner; and its strength was increased by the appointment of two Inspectors to assist in prosecutions in the Presidency Magistrates' Courts and the addition of five constables to the staff attached to the Suburban Courts. It is noted with satisfaction that the Chief Presidency and the other Stipendiary Magistrates have reported favourably upon the work done by the Inspectors above referred to.

2. There were fewer departmental punishments by way of dismissal or otherwise during the year, and the number of members of the force convicted for offences by the Courts was 18 (1 officer and 17 men) as against 21 in 1903; but the convictions for extortion, causing grievous hurt and giving false information, although few, are unsatisfactory incidents, and compare unfavourably with the facts reported in the preceding year. The heading of columns 15 and 16 in Statement F appended to the report, the figures in which are intended to relate to judicial punishments for offences against discipline, is scarcely intelligible as it stands, and ought in future to be altered so as to refer to the Calcutta and the Suburban Police Acts of 1866. The number of persons resigning rose from 302 to 321; but it is stated that the promulgation of the recent orders of the Government of India sanctioning an enhancement in the pay of constables has already had an appreciable effect in checking the submission of resignations. The percentage of sick in hospital *per diem* is returned at 2·6, as against 4·5 in 1903; but this is attributed to a tendency, deprecated by the Commissioner, to treat more cases as "out-patients," and the attention of the Medical Department will be drawn to the matter.

3. The total number of cognizable cases reported shows an increase of 4,039 cases, which, however, is less unsatisfactory than would appear at first sight. Nearly half of it is due to the addition of 1,935 cases of cruelty to animals, while 234 more cases under the Calcutta Port Act, 1880, 163 more cases under the Excise Law (principally in connection with the illicit sale of cocaine), and 162 more cases of vagrancy and loitering were dealt with. On the other hand, there was a decrease under the head of murder and graver offences against the person, and the only really unsatisfactory increase apparent is in respect of burglaries, which rose from 486 to 568, the increase occurring almost entirely in the suburbs. This clearly demands the special attention of the Commissioner.

4. The number of non-cognizable cases instituted shows practically no fluctuation, being 13,859 as compared with 13,669 in the preceding year. Nine thousand five hundred and fifteen of these ended in conviction, and only 187 were pending at the close of the year, as against 352 at the close of 1903 and 1,550 at the close of 1902, a remarkable improvement which may, no doubt, fairly be attributed to the efficiency of the recent rearrangement of work in the Presidency Police Courts.

5. The results before the Courts were good, the percentage of cases ending in conviction to the total number tried being 90, as compared with 80·22 in 1903. In the High Court there were 66 trials, and in 57 of these the prosecution was successful. As regards false cases, the report undoubtedly indicates some improvement; for, while there were fewer cases (113 compared with 167), there were more frequent prosecutions (36 against 20) and the number of convictions rose from 4 to 18. The conviction of four separate gangs of criminals engaged in dacoity and other heinous crime is a matter on which both the Bengal Police and the Calcutta Police, who worked successfully in combination, are to be congratulated; while the successful prosecution of 97 receivers of stolen property, and the proceedings taken against 253 bad characters and 57 vagrants connote a distinct advance on the preceding year, and indicate that more attention is being paid to professional crime. The number of old offenders reconvicted rose from 749 to 855; but the number convicted at sessions (79) is still far too low, regard being had to the circumstance that, of the total mentioned above, 362 persons had been previously convicted more than thrice and 130 more than six times.

6. The figures given regarding missing children are interesting. It appears that 2,113 were lost during the year, and that of these 2,082 were

recovered and restored to their parents or guardians by the police, while 8 were sent to the Foundling Hospital and 23 could not be traced. Among the last mentioned one was reported to have been wearing ornaments when last seen.

7. Only 14 juvenile offenders were sent to the Alipore Reformatory School during the year, as against 32 in 1903. A salutary increase from 16 to 38 is, however, reported in the number of persons dealt with under the provisions of section 562 of the Criminal Procedure Code, which were enacted in 1898 with the object of enabling a Court, if it thinks that, in view of the youth, character and antecedents of an offender, the trivial nature of the offence, and any extenuating circumstances connected with the case, it is expedient to release him on probation, to do so on proper security being given and avoid sentencing him to any punishment.

8. The system of recording finger impressions for the purposes of identification is said to have continued to show excellent results, 917 criminals having been recognised by this agency, as against 897 in 1903.

9. The Motor Car and Cycle Act of 1903 was brought into force during the year, and it is reported that the statutory rules under it have worked smoothly and that a large number of licenses has already been issued.

10. The Lieutenant-Governor desires to thank the Commissioner of Police, his colleagues and his subordinates for the good work done by them in the course of the year. The names of those officers who have been specially mentioned have been noted.

ORDER.—Ordered that a copy of this Resolution be forwarded to the Commissioner of Police, Calcutta, for information and guidance.

Ordered also that a copy of the Resolution be forwarded to the Chief Presidency Magistrate, Calcutta, the Commissioner of the Presidency Division, the Chairman of the Corporation of Calcutta, and the Municipal (Medical) Department of this Government for information.

Ordered also that a copy of the Resolution be published in the *Calcutta Gazette*.

By order of the Lieutenant-Governor of Bengal,

H. W. C. CARNDUFF,

Offg. Secretary to the Govt. of Bengal.

REPORT ON THE STATE OF THE SALT MARKET FOR THE FOURTH QUARTER OF 1904-1905.

No. 3491B., dated Calcutta, the 19th May 1905.

From—H. F. SAMMAN, Esq., Offg. Secretary to the Board of Revenue, L. P.,
To—The Secretary to the Government of Bengal, Financial Department.

Member in charge:
THE HON'BLE MR. K. G. GUPTA, I.C.S.

I AM directed to submit the following report on the state of the salt market for the fourth quarter of the year 1904-1905, comprising the months of January, February and March 1905.

2. The quantity of salt of every description cleared during the quarter amounted to 29,58,842 maunds, as compared with 28,34,107* maunds in the previous quarter, and 27,85,757 maunds in the corresponding quarter of the previous year. The net amount of duty levied thereon was Rs. 52,70,595, as against Rs. 53,86,349* in the previous quarter and Rs. 52,87,047 in the corresponding quarter of the previous year.

* Revised figures.

3. The subjoined Table (I) shows in detail the importations into the port of Calcutta and the total clearances of sea-imported salt during the quarter, as compared with the figures of the corresponding quarters of the two previous years:—

TABLE I.

WHENCE IMPORTED.	1902-1903. Fourth quarter.		1903-1904. Fourth quarter.		1904-1905. Fourth quarter.	
	Imported.	Cleared.	Imported.	Cleared.	Imported.	Cleared.
1	2	3	4	5	6	7
	Mds.	Mds.	Mds.	Mds.	Mds.	Mds.
United Kingdom	14,87,073	11,05,[illegible]	13,59,609	12,77,633	10,60,074	11,71,894
Hamburg and Bremen	1,20,673	1,4[illegible]	3,14,480	2,68,770	1,60,018	2,01,041
Port Said	.....	24,1[illegible]	.....	.....	.....	.....
Aden	3,07,519	4,56,979	6,10,291	2,74,066	5,61,986	4,83,268
Rawayah	.....	1,04,217	.....	1,80,084	.....	86,180
Muscat, Linga and Hanjam	4,88,681	4,02,241	3,31,301	1,94,091	6,53,945	4,33,240
Rock salt	.....	74,144	2,500	27,350	.....	14,000
South Africa—Cape Colony	3,167	6,642	5,444	5,840	13,611	5,569
Bombay	.....	2	.....	3	.....	.....
Ceylon	1,05,189	1,73,087	14,885	97,736	1,05,886	1,35,449
Madras, Cocanada and Vizagapatam	.....	.....	.....	8	.....	2
Portuguese Possessions	.....	.....	24,450	30,000	11,429	11,429
Australia and Straits Settlements	.....	.....	.....	.....	.....	.....
East Africa, Mauritius, &c.	.....	.....	.....	3	.....	1
Spain	.....	.....	.....	.....	.....	1
Rangoon	.....	.....	.....	.....	1,26,111	3,600
	.....	.....	.....	.....	.....	7
Total	25,89,291	25,06,331	26,63,060	23,46,488	26,46,961	25,16,513

Compared with the corresponding quarter of the previous year, there was a slight decrease in the importation of salt, but a considerable increase in the quantity cleared; in comparison with the same quarter of 1902-1903, there was an increase in both the importations and clearances of salt.

4. Table II shows the quantity of sea-imported salt remaining in the warehouses at the close of the quarter as compared with the previous four quarters:—

TABLE II.

WHERE STORED.	Fourth quarter of 1903-1904.	First quarter of 1904-1905.	Second quarter of 1904-1905.	Third quarter of 1904-1905.	Fourth quarter of 1904-1905.
1	2	3	4	5	6
	Mds.	Mds.	Mds.	Mds.	Mds.
Sulkea Government Salt golas	12,40,006	13,88,341	24,54,660	20,06,579	18,83,786
Kidderpore Dock ditto	8,17,882	8,72,434	9,08,238	7,00,817	7,04,636
Chittagong ditto	1,92,795	1,57,250	1,40,638	98,701	1,03,418
Narayangahj (private bonded salt warehouses)	69,440	68,630	63,045	73,603	67,745
Chandbali ditto ditto	9,500	500	3,111	14,700	7,200
Bhairab Bazar ditto ditto	24,949	26,474	10,580	6,635	24,675
Jalakati ditto ditto	86,518	82,848	89,903	1,00,898	80,854
Ashuganj ditto ditto	6,275	...	.....	.....	... ...
Dacca ditto ditto	5,710	...	... ...	.....	.....
Madaripur ditto ditto	8,883	9,868	2,915	24,753*	17,319
Chandpur ditto ditto	13,336	13,906	7,857	19,349	15,386
Mirkadim and Kamalghat ditto ditto	7,250	2,113	380	13,135	7,500
Narsipur ditto ditto	.....	.....	.....	.....	.....
Saraghat ditto ditto	.....	.....	.....	.....	15,800
Total	24,71,261	28,22,563	36,77,525	30,04,930*	27,35,684

* Revised figures.

Stocks at the close of the quarter were less than those of the previous two quarters, but were in excess of those of the corresponding quarter of the previous year.

5. The despatches of salt from Calcutta by boat and by the several railways passing through the different pass-stations into the interior of the country, both east and west of the river Hooghly, as well as the despatches by steamers and flats during the quarter and the corresponding quarters of the last two years are shown in Table (III) below:—

TABLE III.

PERIOD.	BY WATER					BY RAIL			BY STEAMERS AND FLATS.	
	Vid Balikhal.	*Vid* Sankrail.	*Vid* Gewankhali.	*Vid* Kidderpore.	*Vid* Ballighatta.	By the East Indian Railway.	By the Eastern Bengal, Bengal Central and South-Eastern Railways, or *vid* Chitpur.	By the Bengal-Nagpur Railway or *vid* Shalimar.	Quantity despatched into the interior (excluding Orissa).	Quantity despatched to Orissa.
1	2	3	4	5	6	7	8	9	10	11
	Mds.	Mds.	Mds.	Mds.	Mds.	Mds.	Mds.	Mds.	Mds.	Mds.
Fourth quarter of 1902-1903.	94,081	1,23,796	1,13,738	39,843	2,38,534	9,80,655	6,15,781	74,330	2,03,180	14,300
Fourth quarter of 1903-1904.	1,05,434	1,13,302	81,642	38,594	2,30,149	8,70,971	6,20,002	85,530	1,91,356	8,600
Fourth quarter of 1904-1905.	1,09,903	1,08,821	76,013	39,350	2,03,240	8,55,093	7,14,392	73,074	2,13,828	13,840

6. The quantity of salt despatched during the quarter by the East Indian Railway to stations beyond Buxar amounted to 810 maunds, as against the same quantity in the previous quarter and *nil* in the corresponding quarter of the previous year.

7. The quantity of saltpetre salt excised in the refineries of the Lower Provinces during the quarter amounted to 5,269 maunds, as compared with 1,395 maunds in the previous quarter and 8,250 maunds in the corresponding quarter of the previous year.

8. The shipments of Liverpool salt during the quarter for the port of Calcutta, according to the published market reports, amounted to 36,022 tons.

	Tons.
* Ehrenfels ...	1,500
Neidenfels ...	1,000

It is reported that the vessels noted in the margin* are afloat for Calcutta with cargoes of salt from Hamburg. The quantity given against each ship is approximate only.

9. Table IV shows the average wholesale prices per 100 maunds of Liverpool and other descriptions of salt during each fortnight of the quarter:—

TABLE IV.

DESCRIPTION OF SALT.	Fortnight ending 15th January 1905.	Fortnight ending 31st January 1905.	Fortnight ending 14th February 1905.	Fortnight ending 28th February 1905.	Fortnight ending 15th March 1905.	Fortnight ending 31st March 1905.
1	2	3	4	5	6	7
	Rs. A. P.	Rs. A. P.	Rs. A. P.	Rs. A. P.	Rs. A. P.	Rs. A. P.
Liverpool *panga*	47 6 2	46 8 0	46 14 2	47 0 0	47 0 0	46 13 0
Hamburg *karkatch*	45 13 4	45 14 6	45 2 6	45 7 1	45 2 8	45 15 2
Muscat ditto	43 0 0	43 8 0	43 0 0	43 0 0	43 0 0	42 0 0
Bombay ditto	44 0 0	43 12 6	41 8 4	41 2 6	40 6 0	43 12 0
Aden crushed	40 0 0	39 0 0	38 5 7	38 0 8	38 4 0	38 14 4
Salif ditto	37 12 0	37 4 6	37 8 0	37 8 9	37 0 0	37 10 0
Mawyah ditto	.....	.....	.....	.....	.....	.....

During the quarter the prices of Liverpool *panga* and Bombay *karkatch* fell and rose again, while those of Hamburg *karkatch* and Muscat *karkatch* rose and fell. The prices of Aden *crushed* and Salif *crushed* fell. The average price per 100 maunds of Madras salt was Rs. 47-6-9.

10. The following Table (V) shows the quantity of sea-imported salt admitted into bond and cleared from bond and shipboard at the several outports and inland warehousing stations:—

TABLE V.

Port or Station.	Description of salt.	Admitted into bond.		Cleared.	
		Fourth quarter of 1903-1904.	Fourth quarter of 1904-1905.	Fourth quarter of 1903-1904.	Fourth quarter of 1904-1905.
1	2	3	4	5	6
		Mds.	Mds.	Mds.	Mds.
Chittagong	English *panga*	46,107	1,04,378	34,733	58,700
	Hamburg and Bremen *karkatch*	74,681	62,996	59,610	36,021
	Aden crushed	..	1,17,841	48,284	55,403
Narayanganj	English *panga*	86,754	93,000	1,01,970	97,775
	Aden crushed	.....	5,500	955	4,245
Chandbali	English *panga*	12,500	.....	11,000	7,500
Bhairab Bazar	Ditto	32,029	58,000	32,312	38,495
Jhalakati	Ditto	1,00,046	39,760	93,280	78,200
	Aden crushed	.....	13,000	... ..	5,500
Ashuganj	English *panga*	.....	.....	2,006	.....
	Aden crushed	.....	.....	1,750	.....
Dacca	English *panga*	..	.....	4,950	.....
Madaripur	English *panga*	15,000	6,000	17,667	12,650
	Aden crushed	.	7,500		2,000
Chandpur	English *panga*	13,300	.....	5,702	10,395
	Hamburg *karkatch*	.....	...	5,000	.....
	Aden crushed	.....	2,361	..	2,000
Mirkadim and Kamalaghat	English *panga*	14,220	10,000	18,350	17,055
Barnipur	Ditto	... ..	...	179	...
Saraghat	Ditto	.....	24,000	.....	9,500
	Total	3,95,808	5,53,336	4,37,768	4,42,599

As compared with the corresponding quarter of the previous year, there was an increase, both in the quantity admitted into bond and in that cleared.

ANNUAL REPORT OF THE ROYAL BOTANIC GARDEN, CALCUTTA, FOR THE YEAR 1904-1905.

No. 733T.—M., dated Darjeeling, the 25th May 1905.

From—E. A. GAIT, Esq., Offg. Secretary to the Govt. of Bengal, Municipal Dept.,
To—The Secretary to the Government of India, Revenue and Agriculture Dept.

I AM directed to submit, for the information of the Government of India, a copy of the 118th Annual Report of the Royal Botanic Garden, Calcutta, for the year 1904-1905.

2. The Lieutenant-Governor considers that Lieutenant-Colonel Prain, I.M.S., Captain Gage, I.M.S., and their subordinates deserve credit for the good work which has been done during the year, and an expression of his acknowledgements has been conveyed to them.

No. 1831—10G., dated Sureil, Sonada, the 10th May 1905.

From—CAPTAIN A. T. GAGE, M.B., L.M.S., Offg. Superintendent, Royal Botanic Garden, Calcutta,
To—The Secretary to the Government of Bengal, Financial Department.

I HAVE the honour to submit herewith the 118th Annual Report of the Royal Botanic Garden, Calcutta, for the year 1904-1905.

ANNUAL REPORT OF THE ROYAL BOTANIC GARDEN, CALCUTTA, FOR THE YEAR 1904-1905.

AMONGST the chief out-door works of the year were, the deepening of several of the tanks, the raising of a mound near the flower-garden with the soil left over after filling up the office tank, and the reconstruction of the Palmyra avenue. The nursery has been laid out on an improved plan and several of the plant-houses in the nursery have been reconstructed. The weather during the greater part of the year was normal. An abnormally low temperature existed during part of January and February 1905, but appears to have left no permanent ill-effects on the garden. A severe storm on the 9th April 1904 overthrew about forty trees.

2. *Economic work.*—The investigations into the species of *Agaves* found in India, referred to in last year's report, have been continued and concluded during the year by Lieutenant-Colonel Prain and Mr. J. R. Drummond, I.C.S. Their results, which promise to be of great value, are in the press. In connection with this investigation, a complete set of the *Agaves* grown in the Calcutta Garden has been sent to the Director of the Missouri Botanic Garden, who is an authority on *Agaves*. The experiments with 'sunn' hemp (*Crotalaria juncea*) are being continued. It appears that the time of sowing is not the same in all parts of the country. It appears to take place considerably earlier in the year at such places as Cawnpore, and Coconada than in Bengal. This accounts for the fact that whereas the fibre from Cawnpore, Coconada, and some other localities comes into the market in October-November, the best kind of 'sunn' hemp—the Bengal or Belgachia brand—does not come into the market until about February. Considerable attention was given to the growing of the different species and varieties of cotton—supplied by the Agricultural Department and the Reporter on Economic Products—cultivated or attempted to be cultivated in India. The plots furnished material for botanical identification, but in other respects the experiment was practically a repetition of the one made in 1870-71, as detailed in the garden report for that year, and with the same unsatisfactory results. The economic work of growing seeds, tubers and plants and identifying them for the Reporter on Economic Products to the Government of India has been carried on as usual during the year.

3. *Herbarium.*—The past year has been a notable one in the history of the Herbarium. In the annual report for 1889-90 Dr. (now Sir George) King writes that when the mounted collection was removed from the old

building into the present one, it was contained in 93 cabinets. In 1890 the collection filled 186 cabinets and the number of specimens was estimated at over half a million. Since 1890 the collection has increased so prodigiously that until this year the cabinets were overflowing and many thousands of specimens had to be piled on tables and on the floor. The special grant allotted to the garden during the year under review has enabled the general Herbarium in the gallery of the building to be entirely reorganised. All the old cabinets which were arranged in groups of nine have been replaced by large handsome double-sided cabinets, built in four sections so as to allow of easy handling, each new cabinet occupying no more floor space than nine old ones, but having a capacity half as great again as the nine old ones. There are now thirty-two cabinets in the general Herbarium with a total capacity of about a million specimens. It is hoped to replace the old cabinets still remaining on the ground floor and containing the local herbaria and unclassified collections during the coming year. When this will have been done the capacity of the present building will be utilised to the fullest extent. It would be rash to prophesy how long the present improved accommodation will suffice, but in the natural course of development of the institution, congestion is bound to recur, and when it does so it will have to be relieved by enlarging the building itself. It is very satisfactory to be able to chronicle such a great improvement as the liberality of Government has enabled the officers responsible for the Royal Botanic Garden to effect. It would, however, have been still more satisfactory to be able to state that the scientific staff had increased *pari passu* or approximately so, with the development of the Herbarium. During the last forty years the Herbarium and Library have increased at least five-fold. The scientific staff of the Herbarium still consists of only one man, exactly as it did half a century ago. In the annual report for 1889-90 already quoted, Sir George King, referring to the work of the Herbarium, states that then the work was getting very heavy and that it might be necessary before long to apply for the services of yet another botanist. If fifteen years ago the work of the Herbarium justified Sir George King's remarks, still more does the great increase in the collection which has gone on steadily during those years render imperative a re-statement of them. The re-arrangement of nearly a million specimens in the new cabinets entailed a great amount of extra work during the year, and this, coupled with the absence of the Curator of the Herbarium for six months, made it impossible to depute any European officer to collect specimens. Native collectors, however, were sent to Tenasserim and to Sylhet; and towards the end of the year, by the kindness of Mr. Merk, Chief Commissioner for the Andamans, a collector was sent to the Nicobar islands. Collections have also been made by Lepcha collectors in the Chumbi valley, working under the supervision of Mr. G. L. Scaright, the officer in charge of the road survey there. The number of specimens received in the Herbarium amounted to almost 7,000. The specimens distributed are considerably less than the usual number owing to the interruption caused by the re-arranging of the general Herbarium. They number about 4,000 sheets.

4. *Laboratory and Museum.*—In the year 1876, Sir Richard Temple, Lieutenant-Governor of Bengal, wrote two Minutes bearing on the science of Botany. One, dated 9th September 1876, had for its subject the Herbarium at the Botanic Garden, Calcutta; the other, dated 14th September 1876, is entitled "Inquiries and Experiments in the Physiological Branch of Botany." The recommendations in the first Minute concerned with the Herbarium have to a certain extent been carried out or are being carried out. The recommendations in the second Minute have remained unacted upon for practically thirty years. It is true that in 1901 the newly appointed Cryptogamic Botanist to the Government of India was stationed in the Royal Botanic Garden. He, however, was soon afterwards transferred to another department, and the Garden relapsed into its former condition of being without a laboratory and without an officer, who had both the time and the knowledge to study physiological and histological problems. During the year, however, a beginning has been made to provide at least the tools for carrying out the physiological and histological investigations referred to in Sir Richard

Temple's second Minute. A room above the Cinchona Office with accommodation for four workers has been fairly well equipped with the most recent appliances, such as are used in the foremost English laboratories, which the Curator of the Herbarium visited, while on leave, for the purpose of selecting the best equipment. A dark room with all the appliances for ordinary photographic and photo-micrographic work has also been erected. The laboratory, although small, should be of great use to any botanist desiring to study tropical vegetation from a physiological or histological stand-point. Until, however, a permanent additional appointment is created for such investigations, the amount of work turned out from the Laboratory will depend to a large extent on volunteer workers. Until such an appointment has been created as well as an additional one for the Herbarium, the scientific staff of the Calcutta Garden can be described only as very inadequate for the amount of work that waits to be done. Although a fairly good beginning has been made, it must not be supposed that the Laboratory is complete in every detail. A supply of electricity—so necessary for certain physiological investigations—is lacking. In connection with the Laboratory a part of the south verandah of the seed-house has been transformed into a small museum, which has been fitted up with excellent show-cases. As a beginning for a larger and better museum in the future it should promise well.

5. *Library.*—During the year the Library has undergone as complete a reorganisation as the Herbarium. The old clumsy book-cases have been replaced by twelve fine new double-faced cases with sliding doors, each new case giving nearly twice as much space as four of the old ones, and in addition providing ample room for the thousands of valuable drawings executed in the Garden during the last hundred years. The work of transferring the books from the old to the new cases naturally put a temporary stoppage to work on the card-catalogue, which should now, however, go on with greater rapidity. During the year a large number of books were added and several portraits of illustrious botanists were presented to the Library.

6. *Publications.*—During the year there were issued the following numbers of the Records of the Botanical Survey of India:—

Volume III, No. 1.—*The Vegetation of the district of Minbu*, by Captain A. T. Gage, Curator of the Herbarium.

Volume III, No. 2.—*The Vegetation of the districts of Hughli-Howrah and the 24-Parganas*, by Lieutenant-Colonel D. Prain, Superintendent of the Garden.

Volume IV, No. 1.—*An Epitome of the British Indian Species of Impatiens, Part I*, by Sir J. D. Hooker.

Colonel Prain also published a paper "On the Morphology, Teratology, and Diclinism of the flowers of Cannabis," forming No. 12 of the Scientific Memoirs by Officers of the Medical and Sanitary Departments of the Government of India, as well as *Noviciæ Indicæ*, Nos. XXIV and XXV, contributed to the Journal of the Asiatic Society of Bengal, Volume LXXIII, Part II, 1904.

During the year also Sir George King and Mr. Gamble have published Part XV of their *Materials for a Flora of the Malayan Peninsula.*

7. *Interchange of Seeds and Plants.*—During the year 3,368 packets of seeds were distributed and 1,674 packets were received. The latter included collections from the Botanic Garden, Sydney; the Botanic Garden, Sapporo, Japan; the Bureau of Forestry, Manila; Messrs. Reasoner Brothers, Florida; M. Buysmann, Middleburg, Holland; Sir Thomas Hanbury, M. Herb and M. Sprenger, Italy; and Mr. J. C. Harvey, Mexico, as well as gifts from the chief Botanical Gardens in England and the Continent. Large collections were contributed by the Reporter on Economic Products, by Mr. G. H. Cave while officiating as Curator of the Garden at Ootacamund, and by the Lepcha collectors in the Chumbi valley under Mr. Searight. The number of plants distributed was 40,898. These included a collection of Pomeloes sent to the Bureau of Plant Industry, Washington, a large collection of Rhea roots to Uganda and several thousands of Sisal Hemp plants to various parts of India. The number of plants received was 4,584. These included several

hundreds of *Agaves* contributed by Mr. C..A. Barber of Madras; Dr. E. J. Butler; Mr. Cameron of Bangalore, and several others, primarily to aid the investigation into *Agaves* by Colonel Prain and Mr. Drummond. Mr. T. J. Spooner of Dharwar presented over 300 plants. For the Reporter on Economic Products over 500 plants and tubers were cultivated.

8. *Lloyd Botanic Garden.*—This Garden suffered somewhat from the severe cold in January and February. Plants representing about twenty different indigenous species and as many exotic species were killed. Otherwise the condition of this Garden was normal throughout the year. The usual collections of Himalayan seeds were made for distribution.

9. *Financial.*—The allotment for contingencies for the Royal Botanic Garden, as well as the special grant for the reorganisation of the Herbarium and Library and establishment of a Laboratory and Museum were spent in full. There was a saving of Rs. 2,839-4-1 under establishment charges and of Rs. 781-3 under travelling allowance. All the allotments for the Lloyd Botanic Garden were spent. The revenues for the Royal Botanic Garden of Rs. 1,415-0-6 and for the Lloyd Botanic Garden of Rs. 331-4 were paid into the Calcutta and Darjeeling treasuries, respectively.

WEATHER AND CROP REPORT.

For the week ending the 29th May 1905.

Burdwan.—Rainfall at Sadar 2·03, Kalna 0·29, Katwa nil, Raniganj 1·23. Ploughing continues. Sowing of jute and early rice going on. Sugarcane being planted. Fodder sufficient. No cattle-disease reported. Scarcity of water reported from thana Asansol. Common rice sells as follows :—

	Srs.	ch.	
Sadar	13	8	per rupee.
Kalna	12	5	
Katwa	13	12	
Raniganj	14	0	

Birbhum.—Rainfall at Sadar 0·32, Rampur Hât nil. Weather seasonable. Transplantation of sugarcane and manuring of fields continue. Fodder and water sufficient. Common rice sells as follows :—

	Srs.	ch.	
Sadar	15	0	per rupee.
Rampur Hât	15	0	

Bankura.—Rainfall at Sadar ·3, Vishnupur ·02. Weather sultry. Ploughing continues. Early rice being sown. Rain needed for sowing paddy. No cattle-disease. Common rice sells as follows :—

	Srs.	ch.	
Sadar	15	0	per rupee.
Vishnupur	15	5	

Midnapore.—Rainfall at Sadar 0·41, Contai 1·13, Tamluk 0·35, Ghatal 0·12. Early rice is being sown. Ploughing and sowing of winter rice going on. Threshing of summer rice continues. Transplantation of sugarcane continues. Cattle-disease in Dantan and Keshpur. Fodder and water sufficient. Common rice sells as follows :—

	Srs.	ch.	
Sadar	15	0	per rupee.
Contai	18	0	
Tamluk	14	0	
Ghatal	14	0	

Hooghly.—Rainfall at Sadar 0·36, Serampur 0·09, Arambagh 0·14. Weather hot. Lands are being ploughed for winter rice. Weeding of early rice commenced. No cattle-disease. Fodder and water sufficient. Common rice sells as follows :—

	Srs.	ch.	
Sadar	11	0	per rupee.
Serampore	11	3	
Arambagh	13	5	

Howrah.—No rain. Weather hot, sowing of early rice over, and that of jute and winter rice continues. Harvesting of summer rice finished. Fodder and water for cattle sufficient. No cattle-disease. Coarse rice sells as follows :—

	Srs.	ch.	
Sadar	13	0	per rupee.
Uluberia	13	8	

24-Parganas.—Rainfall at Sadar 0·02, Barasat 0·14, Barrackpur 0·11, Basirhat 0·18, Diamond Harbour 0·20. Weather seasonable. Sowing of early rice and jute still continues. Prospects good. Supply of fodder and water sufficient. Common rice sells at 11¾ seers per rupee.

Nadia.—Rainfall at Sadar 0·03, elsewhere nil. Weather cloudy. Sowing of early rice nearly finished. Harrowing and weeding going on. Lands being ploughed for winter rice. Fodder and water sufficient. No cattle-disease reported. Common rice sells as follows :—

	Srs.	ch.	
Sadar	12	5	per rupee.
Kushtia	14	0	
Meherpur	10	0	
Chuadanga	12	8	
Ranaghat	13	0	

Murshidabad.—No rain, except at Kandi 0·07. Weather seasonable. Early rice plants doing well in Lalbagh, where prospects of jute and sugarcane also are good. Winter rice lands are being prepared in places. Early rice and jute are withering for want of rains in Jangipur. Fodder and water sufficient. No cattle-disease. Common rice sells as follows —

	Srs. ch.	
Sadar	13 0	per rupee
Kandi	13 12	
Jangipur	14 8	
Lalbagh	12 8	

Jessore.—Rainfall at Sadar 0·06, Bangaon 0·41. Weather seasonable. Sowing continues. Fodder and water sufficient. Common rice sells as follows :—

	Srs. ch.	
Sadar	14 0	per rupee.
Jhenida	13 0	
Magura	12 8	
Narail	12 5	
Bangaon	12 5	

Khulna.—Rainfall at Satkhira 0·24. Weather hot. Sowing of early and winter rice and jute estimated at 48, 5 and 79 per cent. respectively. State of summer rice favourable. No cattle-disease. Fodder and water sufficient. Common rice sells as follows :—

	Srs. ch.	
Sadar	14 8	per rupee.
Bagerhat	15 0	
Satkhira	13 0	

Rajshahi.—Rainfall at Nator 0·75, Naugaon 1·80. Weather hot and close Jute and all crops promising, but a little rain wanted. No cattle-disease. Fodder and water sufficient. Common rice sells as follows :—

	Srs. ch.	
Sadar	15 0	per rupee.
Nator	13 12	
Naugaon	13 8	

Dinajpur.—Rainfall at Sadar 3·04, Thakurgaon 1·43, Balurghat 3·45. Weather seasonable. Sowing of jute and early rice finished. Fodder and drinking-water sufficient. No cattle-disease. Common rice sells as follows :—

	Srs. ch.	
Sadar	14 8	per rupee.
Balurghat	14 0	
Thakurgaon	13 0	

Jalpaiguri.—Rainfall at Sadar 1·45, Alipur Duars ·61. Weather seasonable. Weeding of early paddy commenced. State of jute favourable. Fodder and water sufficient. No cattle-disease. Common rice sells at 12¾ seers per rupee.

Darjeeling.—Rainfall at Sadar 2·32. Weather seasonable. *Hills*—Early rice, maize, potato and *marua* doing well. *Terai*—Sowing of early rice nearly completed. Condition of standing crops good. Coarse rice sells as follows :—

	Srs. ch.	
Hills	9 0	per rupee.
Terai	14 0	

Maize sells at Darjeeling and Kalimpong at 13 seers per rupee.

Rangpur.—Rainfall at Sadar 3·80, Kurigram 6·85, Gaibanda 2·87, Nilphamari 4·92. Weeding of jute retarded by heavy rain. Prospect of jute reported to be unfavourable. Common rice sells at 12 seers per rupee at all subdivisions.

Bogra.—Rainfall at Sadar 5·38. Fall general. Weather cloudy. Sowing of early rice and jute finished, and their weeding going on. Cultivation for winter rice commenced in places. Fodder and water sufficient. No cattle-disease. Common rice sells at 13½ seers per rupee.

Pabna.—Rainfall at Sadar 2·62, Sirajganj 1·81. Weather partially cloudy and rainy. Prospects of standing crops fair. Weeding of paddy and jute going on. Cattle-disease reported from Ullapara. Fodder and water sufficient. Common rice sells at 11½ seers per rupee.

Dacca.—Rainfall at Sadar 3·88. Fall general. Prospects of crops good. Weather seasonable. Fodder available. No cattle-disease. Common rice sells as follows:—

	Srs. ch.	
Sadar	14 0	per rupee.
Manikganj	12 0	
Munshiganj	13 0	
Narayanganj	12 12	

Mymensingh.—Rainfall at Sadar 14·11, Jamalpur 3·21, Kishorganj 2·30, Netrakona 4·26, Tangail 1·40. Weather cloudy with occasional rains. Prospects of standing crops fair. Weeding of jute and early rice continues. Fodder and water sufficient. No cattle-disease. Common rice sells as follows:—

	Srs. ch.	
Sadar	13 8	per rupee.
Jamalpur	15 12	
Kishorganj	14 14	
Netrokona	16 8	
Tangail	13 0	

Faridpur.—Rainfall at Sadar 1·11. Weather seasonable. Prospects of standing crops good. Fodder and water sufficient. Common rice sells at 12 seers per rupee.

Backergunge.—Rainfall at Sadar ·09. Weather hot during the week. Heavy rain to-day. Condition of *til* poor. No cattle-disease Fodder sufficient. Common rice sells at 13½ seers per rupee.

Tippera.—Rainfall at Sadar 0·65, Brahmanbaria 2·91. Weather seasonable. Prospects good. Sowing of *aus* and *aman* paddy going on. Harvesting of *boro dhan* completed. Fodder and water sufficient. No cattle-disease. Common rice sells as follows:—

	Srs. ch.	
Sadar	13 0	per rupee.
Brahmanbaria	14 8	
Chandpur	13 0	

Noakhali.—Rainfall at Sadar 0·82. Weather seasonable. Sowing of *aus* continues in Sadar and almost finished in Feni. Prospects fair. Cattle-disease reported. Fodder and water sufficient. Common rice sells as follows:—

	Srs. ch.	
Sadar	13 0	per rupee.
Feni	15 0	

Chittagong.—Rainfall at Sadar 0·42, Cox's Bazar 0·15. Weather hot and cloudy. Reaping of *rabi* crops completed and cultivation of *aus* crop still going on. No cattle-disease. Fodder and water sufficient. Common rice sells as follows:—

	Srs. ch.	
Sadar	14 0	per rupee.
Cox's Bazar	14 14	

Chittagong Hill Tracts.—Rainfall 1·01. Weather very hot. *Jum* cultivation continues. Cattle-disease prevails at Sadar. Common rice sells at 15 seers per rupee at Sadar.

Patna.—Rainfall at Sadar 0·50, Barh 1·25, Behar 0·51, Dinapur 0·35, Halsa 1·03, Bikram 0·70. Weather hot with easterly wind. Threshing and winnowing of *rabi* nearly finished. *Cheena* doing well. Sugarcane looks promising. Fodder and water sufficient. No cattle-disease. Common rice sells as follows:—

	Srs. ch.	
Sadar	14 0	per rupee.
Barh	13 0	
Bihar	13 0	
Dinapore	11 0	

Gaya.—Rainfall at Nawadah 0·17. Weather hot with east winds. Sugarcane doing well. China millet being harvested. Fodder and water sufficient. Common rice sells at 12½ seers per rupee.

Shahabad.—Rainfall at Sadar ·98, Buxar ·08 Sugarcane doing well. Fodder and water sufficient. Common rice sells at 14 seers per rupee.

Saran.—Rainfall at Sadar 0·56, Sewan 1·19, Gopalganj 0·55. Weather unsettled. Threshing of *rabi* nearly finished. Recent rain has benefitted the standing crops and has facilitated the ploughing of fields for *bhadoi*. No cattle-disease. Fodder and water sufficient. Common rice and maize sell at 13 and 18 seers per rupee respectively at Sadar.

Champaran.—Rainfall at Sadar 1·30, Bettiah 0·80. Weather hot and occasionally cloudy. Present rain has facilitated the sowing of *bhadoi* and paddy. Preparation of fields still in progress. Sugarcane and *cheena* doing well. No cattle-disease. Fodder and water sufficient. Common rice and maize sell at 13½ and 12½ seers per rupee respectively.

Muzaffarpur.—Rainfall at Sadar 1·12, Hajipur 1·12, Sitamarhi 1·16. Weather occasionally cloudy with easterly wind. Prospects of crops good. Sowing of paddy and *bhadoi* crops in progress. Fodder and water sufficient. No cattle-disease. Common rice and maize sell at 12 and 17 seers per rupee respectively at Sadar.

Darbhanga.—Rainfall at Sadar 1·74, Samastipur 0·48, Madhubani 1·68. Weather cloudy. Preparation of land for *bhadoi* in progress. Fodder and water sufficient. Cattle-disease reported from Singhia outpost. Common rice sells as follows:—

	Srs.	ch.	
Sadar	14	6	per rupee.
Samastipur	13	8	
Madhubani	13	10	

Monghyr.—Rainfall at Sadar 1·30. Weather seasonable with east winds. Threshing of *rabi* crops over. Lands being prepared for *bhadoi* crops. Sugarcane doing well. No cattle-disease Common rice sells as follows:—

	Srs.	ch.	
Sadar	12	8	per rupee.
Begusarai	14	0	
Jamui	12	0	

Bhagalpur.—Rainfall at Sadar 0·46, Madhipura 3·10, Supaul 2·32. Weather hot. Transplantation of paddy begun in some places. Cattle-disease reported from thanas Kishenganj, Protapganj and Dhoria. Fodder and water sufficient Common rice sells as follows:—

	Srs.	ch.	
Sadar	14	0	per rupee.
Banka	15	0	
Madhipura	15	0	
Supaul	17	0	

Purnea.—Rainfall at Sadar 2·50, Araria 2·50, Kishanganj 1·18. Sowing of jute and *bhadoi* crops almost finished and weeding begun. Seedlings of *aghani* paddy being prepared in many places. Condition of standing crops good. Weather cloudy. Fodder and water sufficient. Common rice sells as follows:—

	Srs.	ch.	
Sadar	11	8	per rupee.
Kishanganj	11	0	
Araria	14	0	

Malda.—Rainfall at Sadar 1·96, Nawabganj 0·08, Chanchal 2·02, Gomastapur ·83, Gazole 2·50. Weather cloudy and rainy. Lands are being prepared for winter rice. Weeding of *bhadoi* and jute commenced. Prospects good. No cattle-disease. Fodder and water sufficient. Common rice sells at 12 seers per rupee.

Sonthal Parganas.—Rainfall at Rajmahal 1·47. Weather hot. Sugarcane doing well. Harvesting of *boro* nearly over. Sowing of *mandua* continues. Fodder and water sufficient. Common rice sells at 13 seers per rupee at Sadar.

Cuttack.—Rainfall nil. Weather seasonable. *Dalua* and tobacco being harvested. Sugarcane growing. *Biali* and *saradh* paddy being sown. Condition of cattle generally good. Fodder and water sufficient. Common rice sells at $17\frac{1}{16}$ seers per rupee at Sadar.

Balasore.—Rainfall at Sadar 0·98. Ploughing and planting of sugarcane continue. Condition of cattle good. Fodder and water available. Common rice sells as follows:—

	Srs.	ch.	
Sadar	17	0	per rupee.
Bhadrak	18	0	

Angul.—Rainfall at Sadar 0·93, Phulbani 0·47. A severe storm has passed over. No damage reported. Weather hot. Ploughing and sowing of paddy in progress. Fodder and water available. Common rice sells as follows:—

	Srs.	ch.	
Sadar	18	0	per rupee.
Khondmals	18	0	

Puri.—Rainfall at Khurda 1·21. Weather hot and seasonable. *Dalua* and linseed being harvested. Sugarcane doing well. *Saradh* and *bhadoi* paddy being sown. Condition of miscellaneous crops good. Fodder and water-supply sufficient. Common rice sells at $17\frac{1}{16}$ seers per rupee.

Hazaribagh.—Rainfall at Sadar 0·06. Weather hot. Cattle-disease reported from one thana. Ploughing of lands going on. Fodder and water sufficient. Common rice sells as follows :—

	Srs.	ch.	
Sadar	11	12	per rupee.
Giridih	12	0	

Mandua and Indian-corn sell at 20 and 15 seers per rupee respectively at Sadar.

Ranchi.—Rainfall at Sadar 0·15. Weather seasonable. Ploughing and sowing in progress. State of standing crops good. Cattle-disease reported from five thanas. Fodder and water sufficient. Common rice sells as follows :—

	Srs.	ch.	
Sadar	11	8	per rupee.
Gumla	18	0	

Palamau.—Rainfall nil. Weather hot. Sugarcane and *tawa dhan* doing well. A few cases of cattle-disease. Fodder and water available. Common rice sells at $12\frac{3}{8}$ seers per rupee at Sadar.

Manbhum.—Rainfall at Sadar 0·12. Weather seasonable. Prospects of crops good. Fodder and water sufficient. Cattle-disease reported from thana Purulia. Common rice sells as follows :—

	Srs.	ch	
Sadar	13	0	per rupee.
Gobindpur	12	0	

Singhbhum.—Rainfall 0·45. Prospects of crops good. Sowing of paddy in progress Fodder and water sufficient. Common rice sells at 14 seers per rupee.

General Summary.—Rainfall during the week was fairly general and heavy in parts of North and East Bengal. Agricultural operations are in progress. Prospects continue favourable. Cattle-disease is reported from 10 districts. Fodder and water are generally sufficient. The price of common rice has risen in 10 districts and fallen in 6.

By order of the Lieutenant-Governor of Bengal,

R. W. CARLYLE,

Offg. Chief Secretary to the Govt. of Bengal.

REVENUE DEPARTMENT,

The 30th May 1905.

PRICES-CURRENT (retail) of Food-grains and Salt in the Head-quarters

Number.	DISTRICTS.	QUANTITIES PER RUPEE IN														
		WHEAT.			BARLEY.			RICE, COMMON.			JOWAR OR CHOLUM (*Sorghum Vulgare*).				
		Present return.	Next preceding return.	Corresponding return of last year.	Present return.	Next preceding return.	Corresponding return of last year.	Present return.	Next preceding return.	Corresponding return of last year.	Present return.	Next preceding return.	Corresponding return of last year.		
	BENGAL.	S. Ch.	S. Ch.	S. Ch.	S. Ch.	S. Ch.	S. Ch.	S. Ch.	S. Ch.	S. Ch.	S. Ch.	S. Ch.	S. Ch.	S. Ch.	S. Ch.	S. Ch.
BURDWAN DIVISION. 1	Burdwan ...	...	13 0	16 0	...	...	...	13 8	13 8	13 4	...	...	...			
2	Birbhum ...	14 4	14 4	15 0	...	...	..	14 4	15 0	13 8	...	.	...			
3	Bankura ...	14 0	14 0	16 0	...	...	...	15 0	15 8	14 8	...	.	...			
4	Midnapore ...	9 0	9 0	12 0	...	...	...	16 0	16 0	15 0	...	..	...			
5	Hooghly ...	8 0	7 8	12 0	...	...	...	11 0	10 4	10 0	...	..	...			
6	Howrah ...	...	10 0	13 4	...	12 0	20 0	13 0	13 0	12 0	...	..	...			
PRESIDENCY DIVISION. 7	24-Parganas ...	...	...	...	...	...	...	11 0	11 0	13 0	...	..	...			
8	Calcutta ...	10 10	10 10	11 0	15 0	15 0	16 0	9 10	9 10	9 10	16 0	16 0	16 0			
9	Nadia ...	13 0	13 0	16 0	...	21 5	22 0	12 5	12 0	13 0	...	...	...			
10	Murshidabad ...	13 8	14 0	16 8	22 0	23 0	22 0	12 8	12 8	12 8	...	...	...			
11	Jessore ...	10 0	10 0	12 0	Country. 16 0 Patnai 11 4	Country. 15 0 Patnai 11 8	Country. 16 0 Patnai 12 0	14 0	14 4	16 0	...	...	...			
12	Khulna ...	...	...	...	...	...	...	16 0	16 0	16 0	...	...	...			
RAJSHAHI DIVISION. 13	Rajshahi ...	15 0	15 0	17 13	25 8	26 4	27 0	11 4	12 0	14 4	...	...	...			
14	Dinajpur ...	13 0	13 0	13 4	...	...	...	14 8	14 8	15 9	...	...	...			
15	Jalpaiguri ...	10 0	10 0	11 0	...	...	...	12 0	13 0	14 0	...	...	...			
16	Darjeeling ...	...	...	...	...	...	...	11 8	11 0	12 8	...	...	...			
17	Rangpur ...	11 8	11 8	12 6	...	...	...	12 0	13 0	14 10	...	...	...			
18	Bogra ...	12 0	12 0	13 8	...	...	...	14 4	14 4	17 4	...	...	..			
19	Patna ...	15 0	16 8	18 12	15 12	27 0	24 0	11 4	12 8	17 4	...	...	...			
DACCA DIVISION. 20	Dacca ...	14 0	14 0	16 0	24 0	24 0	29 0	15 8	15 8	15 0	...	...	...			
21	Mymensingh ...	13 8	13 8	12 0	10 10	10 10	11 0	14 0	15 0	14 0	...	...	...			
22	Faridpur ...	16 0	16 0	18 12	24 8	26 0	28 0	12 0	12 0	16 0	...	...	...			
23	Backergunge ...	...	...	...	...	..	...	13 8	13 8	14 4	...	...	...			

A. In the subdivisions the retail prices of salt per rupee are—Kalna 16 seers; Katwa 16 seers; Raniganj 16 seers.
B. At Rampur Hât the retail price of salt is 16 seers per rupee.
C. At Vishnupur the retail price of salt is 16¼ seers per rupee.
D. In the subdivisions the retail prices of salt per rupee are—Contai 15 seers; Tamluk 16 seers; Ghatal 16 seers.
E. In the subdivisions the retail prices of salt per rupee are—Serampore 16½ seers; Arambagh 16 seers 8 chittaks.
F. At Ulubaria the retail price of salt is 16 seers per rupee.
G. In the marts in the interior of the district the retail prices of salt per rupee are—Chetla 16 seers; Baraset 14 seers; Baduria 13 seers 8 chittaks; Mograhat 14¾ seers; Barrackpore 13 seers.
H. In the subdivisions the retail prices of salt per rupee are—Kushtia 16 seers; Chuadanga 18 seers (parga), Meherpur 13 seers; Ranaghat 14½ seers.
I. In the subdivisions the retail prices of salt per rupee are—Lalbagh 16 seers; Kandi 14 seers; Jangipur 16 seers.
J. In the subdivisions the retail prices of salt per rupee are—Jhenida 15 seers; Magura 16 seers; Bangaon 16 seers; Narail 12 seers.

EERS OF 80 TOLAHS.

BAJRA OR CUMBU (*Pennisetum typhoideum*).			MARUA OR RAGI (*Eleusine Corocana*).		
Present return.	Next preceding return.	Corresponding return of last year.	Present return.	Next preceding return.	Corresponding return of last year.
Ch.	S. Ch.	S. Ch.	S. Ch.	S. Ch.	S. Ch.
...	...	...	...	...	...
...	...	...	...	...	...
...	...	...	...	...	...
...	...	...	...	...	...
...	...	...	...	...	...
...	...	16 0	...	...	...
...	...	...	...	...	...
0	13 0	14 0	...	...	...
...	...	...	...	...	...
...	...	...	...	...	...
...	...	...	...	...	...
...	...	...	...	...	...
...	...	...	...	...	...
...	...	...	...	...	...
...	...	...	...	...	...
...	...	...	13 0	13 0	13 0
...	...	...	...	...	...
...	...	...	...	...	...
...	...	...	...	...	...
...	...	...	...	...	...
...	...	...	...	...	...
...	...	...	...	...	...
...	...	...	...	...	...

Kangni or Kakun Italian millet (*Setaria italica*).			Gram, Chana, Chhola, Kadala or Sunaga (*Cicer arietinum*).		
Present return.	Next preceding return.	Corresponding return of last year.	Present return.	Next preceding return.	Corresponding return of last year.
S. Ch.	S. Ch.	S. Ch.	S. Ch.	S. Ch.	S. Ch.
...	...	...	15 8	15 0	17
...	...	...	15 0	16 0	19
...	...	...	13 8	15 8	17
...	...	...	11 0 to 13 0	11 0 to 13 0	14 0 to 16 0
...	...	...	13 0	13 0	14
...	...	...	16 0	16 0	16
...	...	...	16 0	15 0	18
7 0	7 0	8 0	13 0	13 0	14
...	...	...	18 8	20 0	22
...	...	...	18 0	18 0	21
...	...	...	16 0	16 0	18
...	...	...	15 0	15 0	14
...	...	...	17 10	20 8	22
...	...	...	16 0	15 8	15
...	...	...	13 0	12 0	14
...	...	...	10 0	10 0	12
...	...	...	14 0	14 0	14
...	...	...	14 4	12 0	16
...	...	...	18 5	15 0	19
...	...	...	15 8	15 8	15
...	...	...	13 0	13 0	13
...	...	...	10 0	10 0	12
...	...	...	13 0	13 0	13

Station Bazars of the Districts of Bengal on the 15th May 1905.

Indian-corn or Maize (*Zea mays*).			Arhar (*dál*) or Thur, Cadjan Pea (*Cajanus indicus*)			Salt.			Wholesale prices per maund of 40 seers. Salt			DISTRICTS	Number.	
Present return.	Next preceding return	Corresponding return of last year.	Present return.	Next preceding return.	Corresponding return of last year.	Present return.	Next preceding return.	Corresponding return of last year.	Present return	Next preceding return.	Corresponding return of last year.			
Q. Ch.	S. Ch.	S. Ch.	S. Ch.	S. Ch.	S. Ch.	S. Ch.	S. Ch.	S. Ch.	Rs. A. P.	Rs. A. P.	Rs. A. P.	BENGAL.		
...	..	.	10 0	11 4	13 0	15 8 A	14 4	14 0	2 4 0	2 3 6	2 11 0	Burdwan.	1	Burdwan Division.
...	...	...	9 0	9 0	13 0	13 8 B	13 12	12 0	2 8 0	2 8 0	3 2 0	Birbhum.	2	
...		...	13 8	13 8	13 0	16 12 C	16 12	14 0 Panga.	2 6 0	2 6 0	2 13 0	Bankura.	3	
...	...	...	10 8	10 8	11 8	14 0 D	14 0	11 8 Panga.	2 6 0	2 6 0	2 14 0	Midnapore	4	
...	...	.	10 0	10 0	11 0	16 0 E	16 0	13 0	2 8 0	2 8 0	3 2 0	Hooghly	5	
...	...	29 0	11 0	11 0	11 0	16 0 F	16 0	13 0	2 4 0	2 4 0	3 1 0	Howrah	6	
...	...	...	11 0	11 0	12 0	16 0 G	13 6	11 8 Panga.	2 2 6	2 9 0	2 12 0	24-Parganas.	7	Presidency Division.
15 0	15 0	...	8 0	8 0	9 6	13 0	13 0	11 0 Panga.	2 8 0	2 8 0	2 10 0	Calcutta.	8	
...	...	...	9 2	9 2	10 10	16 0 H	16 0	13 0	2 4 0	2 4 0	3 2 0	Nadia.	9	
...	...	...	11 0	11 0	15 0	16 0 I	16 0	12 0	2 8 0	2 8 0	3 4 0	Murshidabad.	10	
...	..	...	16 0	16 0	20 0	16 0 J	16 0	12 0 Panga.	2 8 0	2 8 0	3 2 0	Jessore.	11	
...	...	...	10 0	10 0	9 2	13 5 K	13 5	13 5	3 0 0	3 0 0	3 0 0	Khulna.	12	
...	...	...	12 0	12 0	13 8	15 9 L	15 9	12 12	2 9 0	2 9 0	3 1 3	Rajshahi.	13	
...	...	...	10 0	10 0	12 0	15 0 M	15 0	13 4	2 10 0	2 10 0	3 0 0	Dinajpur	14	Rajshahi Division.
...	...	...	8 0	9 0	10 0	13 0 N	13 0	12 0 Panga.	2 12 0	2 12 0	3 2 0	Jalpaiguri.	15	
12 0	12 0	18 0	6 8	6 8	6 8	11 0 O	11 0	10 0	3 8 0	3 8 0	4 0 0	Darjeeling	16	
...	...	...	10 0	10 0	9 0	16 0 P	16 0	12 0 Panga.	2 8 0	2 8 0	3 5 4	Rangpur.	17	
...	...	...	17 4	16 14	17 4	15 12	15 12	12 12 Panga.	2 8 0	2 8 0	3 0 2	Bogra.	18	
...	...		12 0	12 0	12 0	16 0 Q	14 6	12 12 Panga.	2 8 0	2 8 0	3 2 6	Pabna	19	
...	...	...	16 0	17 0	16 0	16 0 R	16 0	13 0 Panga.	2 8 0	2 8 0	3 0 0	Dacca.	20	Dacca Division.
...		..	11 0	11 0	10 0	15 4 S	15 4	12 12	2 10 0	2 10 0	3 2 0	Mymensingh	21	
	...	...	8 0	9 0	8 12	16 0 T	15 8	12 0 Panga.	2 8 0	2 9 0	3 4	Faridpur	22	
...	...	...	..	...	...	14 0 U	14 0	13 0 Panga.	2 12 0	2 12 0	3 0 0	Backergunge.	23	

K. In the subdivisions the retail prices of salt per rupee are—Bagerhat 12 seers; Satkhira 13 seers.
L. In the subdivisions the retail prices of salt per rupee are—Nator 15¾ seers, Naugaon 13½ seers.
M. No report from subdivision.
N. At Alipur Duars the retail price of salt is 10 seers per rupee.
O. At Kurseong and Siliguri the retail prices of salt per rupee are 8 seers and 10½ seers, respectively.
P. In the subdivisions the retail prices of salt per rupee are—Gaibanda 12 seers; Kurigram 12 seers; Nilphamari 14 seers.
Q. At Sirajganj the retail price of salt is 17 seers per rupee.
R. In the marts in the interior of the district the retail prices of salt per rupee are—Madanganj 14½ seers, Manikganj 10½ seers; Mirkadim 12½ seers.
S. In the subdivisions the retail prices of salt per rupee are—Kishorganj 13 seers 14 chittaks; Jamalpur 13¾ seers, Tangail 12 seers; Netrokona 11½ seers.
T. In the subdivisions the retail prices of salt per rupee are—Goalundo 13 seers 14 chittaks; Madaripur 14 seers.
U. In the subdivisions the retail prices of salt per rupee are—Pirojpur 11 seers; Patuakhali 13 seers; Bhola 14 seers.

PRICES-CURRENT (retail) of Food-grains and Salt in the Head-quarters

QUANTITIES PER RUPEE IN

Number	DISTRICTS	WHEAT.			BARLEY.			RICE, COMMON.			JOWAR OR CHOLUM (*Sorghum Vulgare*).		
		Present return.	Next preceding return.	Corresponding return of last year.	Present return.	Next preceding return.	Corresponding return of last year.	Present return.	Next preceding return.	Corresponding return of last year.	Present return.	Next preceding return.	Corresponding return of last year.
	BENGAL—*concluded.*	S. Ch.	S. Ch.	S. Ch.	S. Ch.	S. Ch.	S. Ch.	S. Ch.	S. Ch.	S. Ch.	S. Ch.	S. Ch.	S. Ch.
CHITTAGONG DIVISION. 24	Tippera	...	...	...	...	...	...	13 5	13 12	14 12	...	...	.
CHITTAGONG DIVISION. 25	Noakhali	...	...	.	...	...	...	13 0	13 0	14 8	...	...	...
CHITTAGONG DIVISION. 26	Chittagong ...	...	...	...	...	...	...	14 0	13 0	14 8	. .	...	...
CHITTAGONG DIVISION. 27	Chittagong Hill Tracts.	...	...	....	..	...	...	13 0 to 14 0	14 0	13 0	.	...	..
	BIHAR.												
PATNA DIVISION. 28	Patna	13 0	13 0	18 0	22 0	24 0	28 0	14 0	13 8	16 0	12 0	...	26 0
PATNA DIVISION. 29	Gaya ...	13 9	15 8	18 0	22 9	22 9	23 8	12 9	13 0	13 12	20 8	...	..
PATNA DIVISION. 30	Shahabad ...	14 8	14 8	18 0	20 0	18 0	28 0	15 0	14 8	15 0	...	...	...
PATNA DIVISION. 31	Saran ...	14 0	14 0	16 0	22 0	22 0	28 0	13 8	13 8	16 0	...	...	...
PATNA DIVISION. 32	Champaran ...	14 8	14 0	16 0 to 17 0	28 0	27 0	42 0	13 8	14 8	17 0	...	...	...
PATNA DIVISION. 33	Muzaffarpur ..	12 0	12 0	15 0	24 0	24 0	26 0	13 0	13 0	15 0	...	...	...
PATNA DIVISION. 34	Darbhanga .	15 6	15 6	17 12	26 7	26 7	30 12	14 8	15 6	15 12	...	...	...
BHAGALPUR DIVISION. 35	Monghyr ...	15 3	13 13	19 0	29 5	29 14	32 0	13 0	13 0	13 0	...	...	...
BHAGALPUR DIVISION. 36	Bhagalpur .	13 4	13 14	16 8	25 4	25 4	21 8	14 8	15 2	13 14	...	...	...
BHAGALPUR DIVISION. 37	Purnea ...	16 0	16 0	17 0	...	...	...	11 8	13 0	15 0	...	...	...
BHAGALPUR DIVISION. 38	Malda ...	13 0	16 0	18 0	...	...	...	12 8	13 0	14 8	...	...	..
BHAGALPUR DIVISION. 39	Santhal Parganas.	11 0	11 0	13 0	19 0	19 0	20 0	15 0	14 0	13 0	...	...	...
	ORISSA.												
ORISSA DIVISION. 40	Cuttack	13 12	14 7	17 1	...	...	...	17 1	17 1	18 6	...	...	...
ORISSA DIVISION. 41	Balasore ...	13 0	13 0	11 6	...	...	...	17 0	17 0	18 C	...	...	...
ORISSA DIVISION. 42	Angul ...	8 0	8 0	8 0	...	...	...	18 0	18 0	26 0	..	...	...
ORISSA DIVISION. 43	Puri ...	13 12	13 2	12 7	...	...	...	17 1	17 1	19 11	...	...	...
	CHOTA NAGPUR.												
CHOTA NAGPUR DIVISION. 44	Hazaribagh ...	11 8	11 0	13 8	17 0	16 0	17 0	11 8	11 8	12 0	...	...	...
CHOTA NAGPUR DIVISION. 45	Ranchi ...	7 8 to 11 0	7 8 to 12 0	8 12 to 14 0	14 0	14 0	18 0	12 0	12 0	13 0	...	...	...
CHOTA NAGPUR DIVISION. 46	Palamau ...	14 10	14 10	18 0	20 4	23 10	...	12 6	12 6	11 13	.	..	...
CHOTA NAGPUR DIVISION. 47	Manbhum .	12 0	11 8	14 0	16 0	16 0	24 0	13 0	13 0	13 0	...	...	22 0
CHOTA NAGPUR DIVISION. 48	Singhbhum ...	14 0	14 0	12 0	...	...	...	14 0	14 0	15 0	...	...	...

V. In the subdivisions the retail prices of salt per rupee are—Chandpur 13 seers 8 chitaks ; Brahmanbaria 14 seers 8 chitaks.
W. At Feni Hát the retail price of salt is 13 seers per rupee.
X. Return from Cox's Bazar not received.
Y. At Chandraghona the retail price of salt is 12 seers per rupee.
Z. In the subdivisions the retail prices of salt per rupee are—Barh 16 seers ; Dinapore return not received ; Bihar 12 seers.
a. In the subdivisions the retail prices of salt per rupee are—Jahanabad 14 seers; Nawada 16 seers; Aurangabad 15 seers.
b. In the subdivisions the retail prices of salt per rupee are—Buxar 15 seers, Bhabhua 18 seers ; Sasseram 16 seers.
c. In the subdivisions the retail prices of salt per rupee are—Siwan 14 seers 8 chitaks ; Gopalganj 15 seers 4 chitaks.
d. At Bettiah the retail price of salt is 14 seers per rupee.
e. In the subdivisions the retail prices of salt per rupee are—Hajipur 14 seers ; Sitamarhi 14 seers.
f. In the subdivisions the retail prices of salt per rupee are—Samastipur 15 seers; Madhubani 14 seers 5 chitaks.
g. In the subdivisions the retail prices of salt per rupee are—Begusarai 14 seers ; Jamui 13½ seers.

CALCUTTA,
The 26th May 1905.

SEERS OF 80 TOLAHS.

Bajra or Cumbu (*Pennisetum typhoidaeum*).			Marua or Ragi (*Eleusine Coracana*).		
Present return.	Next preceding return.	Corresponding return of last year.	Present return.	Next preceding return.	Corresponding return of last year.
S. Ch.	S. Ch.	S. Ch.	S. Ch.	S. Ch.	S. Ch.
...	...	...	...	...	...
...	...	...	...	...	...
...	...	...	...	...	...
...	...	...	...	...	...
...	...	...	...	...	...
14 6	...	...	...	...	...
...	...	...	...	...	...
...	...	...	...	...	...
...	...	...	28 0	28 0	35 0
...	...	...	24 0	24 0	26 0
...	...	...	24 0	27 8	28 8
...	...	...	...	...	...
...	...	...	...	...	...
...	...	...	...	...	...
...	...	...	...	...	...
...	...	...	...	...	...
...	...	...	...	...	...
...	...	...	...	...	...
...	...	...	...	...	...
...	...	...	20 0	20 0	28 12
...	...	...	26 0	25 0	35 0
...	...	...	...	...	...
...	...	...	...	...	...
...	...	...	...	...	...

PRICE-CURRENT (wholesale) of Food-grains, Firewood, &c.,

Number.	Marts.	Rice (best sort).			Common Rice (*mota chaul*).			Wheat (*Triticum sativum*).			Barley (*Hordeum vulgare*).		
		Present return.	Next preceding return.	Corresponding return of last year.	Present return.	Next preceding return.	Corresponding return of last year.	Present return	Next preceding return	Corresponding return of last year.	Present return.	Next preceding return.	Corresponding return of last year.
		Rs. A. P.	Rs. A. P.	Rs. A. P.	Rs. A. P.	Rs. A. P.	Rs. A. P.	Rs. A. P.	Rs. A. P.	Rs. A. P.	Rs. A. P.	Rs. A. P.	Rs. A. P.
1	Calcutta ..	5 4 0	5 8 0	5 4 0	4 4 0	4 4 0	4 0 0	3 8 0	3 8 0	3 4 0	2 8 0	2 8 0	2 6 0
2	Burdwan	4 0 0	4 7 0	4 1 6	2 14 0	2 14 0	3 0 0	...	...	...	...	...	...
3	Midnapore ..	3 0 0	3 0 0	3 4 0	2 8 0	2 8 0	2 10 6	...	...	...	...	...	...
4	Patna .	...	6 10 0	6 10 0	3 2 8	3 5 0	2 4 6	...	2 6 9	2 2 0	...	...	...
5	Rangpur ...	4 0 0	4 0 0	3 1 9	2 14 0	2 10 0	2 10 4	3 8 0	3 8 0	3 1 9	...	...	...
6	Dacca .	3 11 0	3 11 0	3 0 0	2 8 0	2 8 0	2 6 0	2 9 0	2 12 0	2 6 0	1 8 0	1 8 0	1 4 0
7	Chittagong ...	...	...	...	2 12 0	3 2 0	2 14 0	...	...	...	...	...	...
8	Patna ...	4 0 0	4 0 0	2 12 0	3 1 0	2 15 0	2 7 0	2 14 0	3 1 0	2 3 0	1 13 0	1 11 0	1 6 0
9	Muzaffarpur ...	5 0 0	5 0 0	5 0 0	2 13 9	2 13 9	2 9 3	3 1 3	3 1 3	2 8 0	1 9 6	1 9 6	1 8 0
10	Bhagalpur	3 9 0	3 8 0	3 15 3	2 11 0	2 9 0	2 14 0	3 0 0	2 13 0	2 7 0	1 9 0	1 8 6	1 14 0
11	Cuttack ...	3 13 0	3 10 0	3 12 0	2 5 0	2 5 6	2 2 6	2 14 0	3 0 0	2 4 0	...	...	...
12	Ranchi .	4 3 4	4 8 0	3 15 9	3 1 0	3 1 0	2 12 0	3 10 0 to 5 5 0	3 5 0 to 5 5 0	2 14 0 to 4 9 0	2 14 0	2 14 0	2 3 6

CALCUTTA,
The 26th May 1905.

Uar or Cholum (*Sorghum vulgare*).						Bajra or Cumbu (*Pennisetum typhoideum*).						Marua or Ragi (*Eleusine coracana*).						Gram, Chana, Chola, Kadalay, or Sunaga (*Cicer arietinum*).					
Present return.		Next preceding return.		Corresponding return of last year.		Present return.		Next preceding return.		Corresponding return of last year.		Present return.		Next preceding return.		Corresponding return of last year.		Present return.		Next preceding return.		Corresponding return of last year.	
A.	P.	Rs. A.	P.	Rs. A.	P.	Rs. A.	P.	Rs. A.	P.	Rs. A.	P.	Rs. A.	P.	Rs. A.	P.	Rs. A.	P.	Rs. A.	P.	Rs. A.	P.	Rs. A.	P.
6	0	2 6	0	2 6	0	2 4	0	2 12	0	2 10	0	...		...		...		2 12	0	2 12	0	2 8	0
...		...		...		...		...		...		...		...		...		2 10	0	2 8	0	2 4	0
...		...		...		...		...		...		...		...		...		2 12 to 3 4	0 0	2 12 to 3 4	0 0	2 4 to 2 8	0 0
...		...		...		...		...		...		...		...		...		2 1	6	2 10	6	2 8	9
...		...		...		...		...		...		...		...		...		2 4	0	2 10	6	2 7	0
...		...		...		...		...		...		...		...		...		2 8	0	2 8	0	2 8	0
...		...		...		...		...		...		...		...		...		2 12	0	3 4	0	3 0	0
5	0	...		1 7	0	...		...		...		...		...		...		2 1	0	2 5	0	1 11	6
...		...		...		...		...		...		1 9	6	1 9	6	1 8	0	2 13	9	2 13	9	1 13	0
...		...		...		...		...		...		...		...		...		2 2	0	2 1	0	1 13	6
																		Birl or kalai.					
...		...		...		...		...		...		...		...		...		2 1	6	2 1	6	2 2	6
...		...		...		...		...		...		...		...		...		3 5 to 3 6	0 0	3 3	0	3 5	4

PRICE PER MAUND

Indian-corn or Maize (*Zea mays*).			Arhar Dal or Thur—Cadjan Pea (*Cajanus indicus*).			Linseed.			Mustard and Rapeseed		
Present return.	Next preceding return.	Corresponding return of last year.	Present return.	Next preceding return.	Corresponding return of last year.	Present return.	Next preceding return.	Corresponding return of last year.	Present return.	Next preceding return.	Corresponding return of last year.
Rs. A. P.	Rs. A. P.	Rs. A. P.	Rs. A. P.	Rs. A. P.	Rs. A. P.	Rs. A. P.	Rs. A. P.	Rs. A. P.	Rs. A. P.	Rs. A. P.	Rs. A.
2 8 0	2 8 0	...	4 12 0	4 12 0	4 4 0	4 14 0	4 14 0	4 6 0	4 10 0	4 10 0	4 2
...	...	...	4 1 0	3 12 0	3 1 3	...	...	...	5 4 0	5 10 0	3 12
...	...	—	3 6 0	3 6 0	3 4 0	4 4 0	4 0 0	3 2 0	Black mustard. 5 4 0	5 0 0	3 12
									Rapeseed. 4 4 0	4 8 0	2 10
...	...	...	...	3 4 0	3 5 3	4 10 0	4 10 0	3 8 0	5 0 0	4 12 0	4 6
—	...	...	3 0 0	3 9 0	3 12 5	—	...	—	5 4 0	5 4 0	3 3
—	—	...	2 7 0	2 4 0	2 6 0	...	...	—	—	...	—
—	—	...	4 0 0	4 8 0	4 4 0	...	...	...	4 12 0	5 0 0	3 8
2 3 0	2 3 0	1 4 6	3 5 0	3 6 0	2 7 6	5 2 0	5 5 0	3 4 0	5 0 0	5 4 0	3 8
2 3 6	2 1 6	1 6 3	2 15 3	2 15 3	2 8 0	...	.	...	...	...	—
									Rapeseed. 5 8 0	5 0 0	3 0
1 14 0	1 13 0	1 12 0	3 15 0	3 7 0	2 8 6	5 5 0	4 12 0	3 0 0	Mustard. 4 0 0	4 0 0	3 5
...	...	...	2 3 0	2 3 0	2 0 3	...	—	—	4 6 0	4 6 0	4 0
—	...	—	6 2 6 to 6 10 6	6 10 6	4 0 0 to 4 11 3	4 0 0	4 0 0	4 0 0	4 10 9 to 5 4 0	4 7 0 to 5 0 0	2 14 to 3 1

STANDARD SEERS.

Til or Jinjili seed.			Sugar (raw).			Cotton (cleaned).			Jute.		
Present return.	Next preceding return.	Corresponding return of last year.	Present return.	Next preceding return.	Corresponding return of last year.	Present return.	Next preceding return.	Corresponding return of last year.	Present return.	Next preceding return.	Corresponding return of last year.
Rs. A. P.	Rs. A. P.	Rs. A. P.	Rs. A. P.	Rs. A. P.	Rs. A. P.	Rs. A. P.	Rs. A. P.	Rs. A. P.	Rs. A. P.	Rs. A. P.	Rs. A. P.
4 4 0	4 4 0	3 12 0	5 4 0	5 0 0	4 8 0	17 0 0	17 0 0	17 0 0	5 14 0	5 14 0	5 6 0
...	...	...	6 0 0	5 10 0	4 0 0	20 0 0	22 0 0	24 0 0	...	...	...
...	...	...	5 6 0 to 5 10 0	5 6 0 to 5 10 0	4 4 0 to 4 12 0	23 0 0	23 0 0	26 0 0	...	...	...
...	...	...	4 0 0	4 4 0	4 6 0	25 8 0	24 0 0	22 0 0	7 2 6	6 10 0	5 2 6
...	...	...	5 0 0	5 0 0	5 10 0	...	...	...	5 8 0	5 8 0	4 7 0
...	...	...	6 4 0	6 4 0	6 0 0	...	...	...	5 12 0	5 12 0	5 4 0
...	...	...	8 0 0	9 0 0	5 4 0	16 0 0	17 0 0	21 8 0	...	...	...
0 0	5 14 0	3 4 0	4 8 0	4 8 0	3 8 0	19 0 0	18 0 0	20 0 0	8 0 0	6 0 0	5 0 0
...	...	...	3 10 0	3 10 0	2 13 9	...	...	...	...	...	...
...	...	...	4 8 0	4 8 0	4 12 0	19 0 0	20 0 0	25 0 0	...	...	...
13 0	4 13 0	2 15 0	4 9 0	4 12 0	4 0 0	22 0 0	22 0 0	30 0 0	...	...	...
...	...	...	5 5 0 to 5 11 6	5 0 0 to 5 5 0	5 0 0 to 5 8 0	22 14 0	22 14 0	26 10 6	...	...	...

Ghi (clarified butter).						Tobacco Leaf			Hides (cow).			Grass.		
Present return.	Next preceding return.	Corresponding return of last year.	Present return.	Next preceding return.	Corresponding return of last year.	Present return.	Next preceding return.	Corresponding return of last year.	Present return.	Next preceding return.	Corresponding return of last year.	Present return.	Next preceding return.	Corresponding return of last year.
Rs. A. P.	Rs. A. P.	Rs. A. P.	Rs. A. P.	Rs. A. P.	Rs. A. P.	Rs. A. P.	Rs. A. P.	Rs. A. P.	Rs. A. P.	Rs. A. P.	Rs. A. P.	Rs. A. P.	Rs. A. P.	Rs. A. P.
									Per 100 pieces.					
41 0 0	41 0 0	37 0 0	8 0 0	8 0 0	8 0 0	450 0 0	450 0 0	250 0 0	1 2 0	1 2 0	1 2 0			
35 0 0	33 0 0	32 0 0	...	...	—	...	...	...	...	—	—			
			Madhukhah.			Uncleaned, per piece.								
			5 8 0	5 8 0	5 0 0	2 0 0 to 3 0 0	2 3 0 to 3 0 0	2 4 0 to 3 4 0						
34 8 0	34 8 0	32 8 0	Pulta.			Cleaned, per piece.								
			8 0 0	8 0 0	8 8 0	2 4 0 to 3 4 0	2 4 0 to 3 4 0	2 8 0 to 3 8 0						
46 10 8	52 0 0	52 0 0	12 0 0	11 0 0	12 8 0	...	—	...	...	—	—			
34 0 0	34 0 0	32 14 2	4 8 0	4 7 0	4 10 4	—	—	—	0 3 0	0 3 0	0 3 0			
									Per maund.					
45 0 0	45 0 0	40 0 0	7 12 0	7 12 0	7 8 0	38 0 0	38 0 0	25 0 0	0 6 0	0 6 0	0 5 0			
									Per maund.					
35 0 0	35 8 0	35 0 0	7 0 0	7 0 0	14 0 0	16 0 0	16 0 0	16 8 0	...	...	...			
28 0 0	28 0 0	30 0 0	3 8 0	3 8 0	3 8 0	...	...	...	...	0 5 0	0 5 0			
30 7 6	30 7 6	32 0 0	8 0 0	8 0 0	8 0 0	...	...	...	—	—	—			
32 0 0	32 0 0	31 0 0	5 12 0	6 0 0	6 0 0	...	...	...	...	...	...			
									Per maund.					
38 0 0	36 9 0	34 11 0	4 4 0	4 4 0	4 4 0	25 0 0	25 0 0	25 0 0	0 7 6	0 7 6	0 7 6			
									Per piece.					
35 12 0 to 40 0 0	33 12 0 to 40 0 0	35 8 10 to 42 10 8	10 0 0	10 0 0	6 10 0 to 13 5 3	1 8 0	1 8 0	2 0 0	0 6 4	0 6 4	0 8 0			

8243

the undermentioned Marts of Bengal on the 15th May 1905.

Straw.			Juar stalks.			Price per maund of 40 standard seers.									Marts.
						Iron.			Firewood.			Salt.			
Present return.	Next preceding return.	Corresponding return of last year.	Present return.	Next preceding return.	Corresponding return of last year.	Present return.	Next preceding return.	Corresponding return of last year.	Present return.	Next preceding return.	Corresponding return of last year.	Present return.	Next preceding return.	Corresponding return of last year.	
Rs. A. P.	Rs. A. P.	Rs. A. P.	Rs. A. P.	Rs. A. P.	Rs. A. P.	Rs. A. P.	Rs. A. P.	Rs. A. P.	Rs. A. P.	Rs. A. P.	Rs. A. P.	Rs. A. P.	Rs. A. P.	Rs. A. P.	
0 14 0	0 14 0	0 14 0	...	...	...	6 0 0	6 0 0	5 12 0	0 8 0	0 8 0	0 8 0	2 8 0	Panga. 2 8 0	2 10 0	1. Calcutta.
0 8 6	0 8 0	0 12 6	...	...	...	...	...	...	0 7 3	0 6 0	0 6 0	2 4 0	2 3 6	2 11 0	2. Burdwan.
0 8 0	0 8 0	0 10 0	...	...	...	2 8 0 to 4 0 0	2 8 0 to 4 0 0	2 8 0 to 4 0 0	0 4 0	0 4 0	0 4 0	2 6 0	Panga. 2 6 0	2 14 0	3. Midnapore.
0 13 0	1 0 0	0 14 0	...	...	...	5 4 0	7 0 0	7 0 0	0 5 6	0 6 0	0 6 0	2 8 0	Panga. 2 8 0	3 2 6	4. Pabna.
0 12 0	0 12 0	0 12 0	...	...	...	7 4 0	7 4 0	7 4 0	0 8 0	0 8 0	0 8 0	2 8 0	Panga. 2 8 0	3 5 4	5. Rangpur.
...	...	...	...	...	...	5 8 0	5 8 0	4 12 0	0 6 0	0 6 0	0 5 0	2 8 0	Panga. 2 8 0	3 0 0	6. Dacca.
...	...	...	...	...	...	4 4 0	4 2 0	4 8 0	...	...	...	2 6 0	2 6 0	2 14 0	7. Chittagong.
...	0 8 0	0 6 0	...	...	...	4 0 0	4 0 0	4 0 0	0 6 0	0 6 0	0 5 0	2 8 0	2 8 0	3 0 0	8. Patna.
...	...	...	...	...	...	5 11 6	5 11 6	5 11 6	0 4 0	0 4 0	0 4 0	2 15 3	Panga. 2 15 3	3 3 0	9. Muzaffarpur.
...	...	...	...	...	...	5 0 0	5 0 0	5 0 0	0 5 0	0 5 0	0 5 3	2 8 6	2 7 0	2 14 3	10. Bhagalpur.
0 7 6	0 7 6	0 7 0	...	...	...	3 13 0	3 13 4	4 2 0	0 4 0	0 4 0	0 4 6	2 8 0	Karkatch. 2 8 0	2 8 0	11. Cuttack.
0 10 8	0 10 8	0 6 0 to 0 9 0	...	...	...	5 0 0	5 8 0	5 0 0	0 5 0	0 5 0	0 5 0	3 4 0	Panga. 3 4 0	3 7 0	12. Ranchi.

R. W. CARLYLE,

Offg. Chief Secretary to the Govt. of Bengal.

GOVERNMENT OF BENGAL, IRRIGATION DEPARTMENT.

Approximate Return of Traffic on the Circular and Eastern Canals for the week ending Saturday, the 27th May 1905, as compared with the corresponding week of the previous year.

Nature of Cargo.	Week ending Saturday, the 27th May 1905.			Week ending Saturday, the 28th May 1904		
	Number of boats.	Weight of cargo.	Tollage.	Number of boats.	Weight of cargo.	Tollage.
		Mds.	Rs.		Mds.	Rs.
Rice and paddy	606	85,487	1,256	321	66,714	928
Jute	5	5,000*	48	21	15,913†	130
Firewood	23	34,190	516	54	54,275	816
Other articles	554	2,12,030	2,834	521	1,44 730	1,802
Total ...	1,188	3,36,707	4,654	917	2,81,632	3,676

* Weight by canal measurement = 5,000 maunds.
† Ditto ditto = 17,360 „

IRRIGATION DEPARTMENT, BENGAL.

IRRIGATION OPERATIONS FOR THE OFFICIAL YEAR 1905-06.

Area leased for irrigation up to end of April 1905.

Circle.	District.	Canal.	Estimated full discharge.	Average discharge in month.	Discharge utilised.	Approximate area of land irrigated during the year up to the end of the month.	Approximate area of land under irrigation up to the same date last year.	DETAILS OF AREAS LEASED.							Rainfall, 1905-06.		Rainfall, 1904-05.		Remarks.
								Long-term leases.	Season leases.						During month.	Up to end of month.	During month.	Up to end of month.	
									Kharif.	Rabi	Sugarcane.	Hot-weather.	Total.	Grand total.					
			C. ft.	C. ft.	C. ft.	Acres.	Acres.	Acres.	Acres.	Acres.	Acres.	Acres.	Acres.	Acres.	Inches.	Inches.	Inches.	Inches.	
Orissa	Cuttack	Taldanda system	1,342	...	...	25	22	47,655	...	...	25	...	25	47,680	1·60	1·60	0·00	0·00	Average rainfall of Kulsai, Baha and Jagatsingpur.
		Kendrapara do.	1,965	161	55	...	...	57,648	...	...	...	...	...	57,649	2·45	2·45	0·00	0·00	Average rainfall of Kendopatna, Marsaghai, Kendrapara, Nurtang and Ichapur.
		High Level, Range I	608	105	1	...	45	11,818	...	...	...	20	20	11,838	0·75	0·75	0·05	0·05	Average rainfall of Cuttack and Jenapur.
		Ditto, Range II	738	77	1	...	...	5,763	...	...	...	...	...	5,763	1·61	1·61	0·12	0·12	Average rainfall of Jenapur and Akhoyapada.
		Jajpur Canal	700	26	23	14	37	13,658	...	...	33	12	45	13,703	0·75	0·75	0·00	0·00	Jajpur.
	Balasore	Dudhai Canal	...	...	...	...	...	...	...	...	...	...	...	...	...	...	...	...	
		High Level, Range III	723	61	...	5	317	39,934	...	...	21	78	100	40,034	2·06	2·06	0·08	0·08	Akhoyapada.
		Total Orissa Canals ...	...	...	...	44	429	176,476	...	...	80	110	190	176,666	...	...	...	...	
		Total of the corresponding period of last year.	...	...	...	...	...	176,833	...	...	164	267	431	177,264	...	...	...	...	
South-Western	Midnapore	Midnapore	1,411	92	...	...	...	54,616	10,903	...	...	...	10,903	65,519	2·67	2·67	1·25	1·25	
	Howrah	Panchkura	522	3	...	...	...	5,931	14	...	...	...	14	5,945	3·66	3·66	0·60	0·60	
		Tidal Reaches, Ranges I and II...	...	...	...	...	...	228	...	...	...	...	...	228	4·19	4·19	0·85	0·85	
		Total Midnapore Canal ...	...	...	...	...	...	60,775	(a)10,917	...	...	...	10,917	71,692	...	...	...	...	
		Total of the corresponding period of last year.	...	...	...	...	...	62,169	(a)11,752	...	...	...	11,752	73,921	...	...	...	...	
	Burdwan and Hooghly.	Eden Canal	1,000	70	...	...	...	22,580	...	4	...	...	4	22,584	4·61	4·61	0·00	0·00	
		Total Eden Canal ...	...	...	...	...	...	22,580	...	4	...	...	4	22,584	...	...	...	...	
		Total of the corresponding period of last year.	...	...	...	...	...	23,122	...	...	...	...	...	23,122	...	...	...	...	

(a) Provisional lease.

Circle.	District.	Canal.	Estimated full discharge.	Average discharge in month.	Discharge utilized.	Approximate area of land irrigated during the year up to the end of the month.	Approximate area of land under irrigation up to the same date last year.	DETAILS OF AREAS LEASED.							Rainfall, 1905-06.		Rainfall, 1904-05.		Remarks.
								Long-term leases.	Season leases.						During month.	Up to end of month.	During month.	Up to end of month.	
									Kharif.	Rabi.	Sugarcane.	Rot-weather.	Total.	Grand total.					
			C. ft.	C. ft.	C. ft.	Acres.	Acres.	Acres.	Acres.	Acres.	Acres.	Acres.	Acres.	Acres.	Inches.	Inches.	Inches.	Inches.	
Sone	Shahabad	Western Main	4,242	831	51	250	251	19,319	...	...	...	231	231	19,650	0·50	0·50	0·01	0·01	
		Buxar	1,236	214	90	3,745	761	55,702	...	...	...	3,767	3,767	59,469					
		Arrah	2,000	478	355	10,042	10,839	156,390	...	...	...	10,788	10,788	169,168	0·47	0·47	0·00	0·00	
	Patna and Gaya	Eastern Main	1,466	346	82	...	8	2,477	...	...	...	5	5	2,482	0·24	0·24	0·00	0·00	
		Patna				319	1,444	77,486	...	...	...	2,760	2,760	80,246					
		Total Sone Canals	...	...	...	14,557	13,083	344,364	...	...	...	17,551	17,551	362,015	...	...	...	...	
		Total of the corresponding period of last year.	...	...	...	...	...	313,443	...	...	...	21,948	21,948	335,391	...	...	...	...	
Gandak	Champaran	Tour	174	...	...	...	17	...	...	...	...	...	...	...	0·92	0·92	0·36	0·36	
		Total Tour Canal	...	...	...	...	17	...	...	...	...	...	...	...	...	...	...	...	
		Total of the corresponding period of last year.	...	...	...	...	...	...	...	...	...	...	...	...	...	...	...	...	
	Saran	Saran	Canals closed.																
		Grand Total	...	...	...	14,601	13,479	604,196	10,217	5	80	17,761	25,763	632,957	...	...	...	...	
		Grand Total of the corresponding period of last year.	...	...	...	...	...	575,667	11,722	...	184	22,215	34,121	609,696	...	...	...	...	

Darjeeling,
The 27th May 1905.

W. A. Inglis,
Secy. to the Govt. of Bengal.

Results of the Meteorological Observations taken at the Alipore Observatory from 21st to 27th May 1905.

Month.	Date.	Maximum in sun.	Number of hours of bright sunshine.	Mean pressure barometer at 32° Fahr.	Temperature. Mean.	Maximum.	Range.	Minimum.	Hygrometry. Mean wet bulb.	Vapour tension.	Dew point.	Humidity.	Wind. Prevailing direction.	Miles recorded.	Rain.	Weather.
1905.		°		Inches.	°	°	°	°	°	Inch.	°	%			Inches.	
May	21st	151·1	7·4	29·538	88·9	95·6	14·2	81·4	93·4	1·069	81·3	80	S and variable ...	66	Nil	Partially cloudy.
,,	22nd	151·3	8·9	·491	88·3	98·0	16·8	81·2	80·9	0·959	73·0	74	S by W, SSW, NW by W.	102	,,	Chiefly cloudy, ≏.
,,	23rd	152·5	9·9	·578	88·6	100·7	24·8	75·9	81 8	1·000	79·2	76	SSW and S ...	157	,,	Chiefly clear,
,,	24th	147·0	10·0	·659	89·4	94·5	12·4	82·1	84·1	1 101	82·2	81	S, SSW and SSE	219	,,	Chiefly clear.
,,	25th	150·7	9·7	·655	87·2	93·6	12·2	81·4	79·7	0 917	76·6	73	SSE, S and variable.	214	,,	Partially cloudy.
,,	26th	143·7	7·1	·652	84·6	91·8	13·9	77·9	77·8	·861	74·7	73	SSE and S ...	228	,,	Partially cloudy, d, t, <.
,,	27th	147·3	6·7	·706	83·8	92·7	17·3	75 4	77·7	·875	75·2	76	SSE, S and SSW	183	0 02	Partially cloudy.

	Inches.
The mean pressure of the seven days	29·611
The average pressure of the corresponding period for 24 years, Surveyor-General's Office	29·625
	Hours.
The total number of hours of bright sunshine	54·7
The maximum possible number of hours of sunshine	93·5
	°
The mean temperature of the seven days	87·3
The average temperature of the corresponding period for 24 years, Surveyor-General's Office	86·8
The extreme variation of temperature	25·3
The maximum temperature	100·7
	Miles.
The highest velocity of the wind in one hour	16
	%
The mean relative humidity	76
The average relative humidity of the corresponding period for 24 years, Surveyor-General's Office	74
	Inches.
The total fall of rain from 21st to 27th May 1905	0·02
The average fall of the corresponding period for 24 years, Surveyor-General's Office	1·06
The total fall from 1st January to 27th May 1905	20·50
The average fall of the corresponding period for 24 years, Surveyor-General's Office	8·60

The mean pressure, temperature, etc., are deduced from the traces of the Barograph and Thermograph, and from eye observations.

The maximum and minimum temperatures are obtained from self-registering thermometers. All the thermometers are verified and the readings have been corrected to a standard constructed and verified at the Kew Observatory. They are exposed under a thatched shed open at the sides, and are suspended four feet above the ground.

The barometer readings are corrected to those of the standard, Newman's No. 86, formerly at the Surveyor-General's Office.

The hygrometric elements are obtained from Tables III, IV and V of the official tables computed in the Meteorological Office, and based on Regnault's modifications of August's formula.

The directions and the movement of the wind are taken from the trace of a Beckley's anemograph.

The mouth of the rain-gauge is one foot above the ground. Rainfall reported on any day is for 24 hours preceding 8 A.M. of that day.

d, drizzling rain; t, thunder; <, lightning; ≏, dew.

METEOROLOGICAL OFFICE, GOVT. OF INDIA,
Alipore (Calcutta), the 29th May 1905.

G. W. KÜCHLER,
for Meteorological Reporter to the Govt. of India and Director-General of Indian Observatories.

EAST INDIAN RAILWAY.

Statement of Goods Traffic in staples carried during the four weeks ending 25th February 1905 as compared with the same period of 1904.

STAPLES.	1904.		1905.		INCREASE.		DECREASE.	
	Weight.	Freight	Weight.	Freight.	Weight.	Freight	Weight.	Freight.
	Mds.	Rs.	Mds.	Rs.	Mds.	Rs	Mds.	Rs.
Apparel, including drapery, haberdashery, millinery, uniforms, accoutrements, boots and shoes	5,430	5,736	3,982	4,295	.....	.....	1,454	1,441
Coal and coke carried for the public and foreign railways	1,42,74,423	17,97,360	1,31,75,788	16,88,969	.....	.....	10,98,728	1,08,391
Cotton—								
(1) Raw	1,08,923	43,137	1,06,813	78,474	37,890	35,337	.....	.....
(2) Manufactured—								
(a) Twist and Yarn, European	2,434	2,092	2,737	2,955	303	863	.....	.....
(b) Ditto, Indian	44,013	15,516	37,500	15,665	.....	149	6,513	.....
(c) Piece-goods, European	1,36,104	1,06,734	1,43,183	1,30,934	6,079	23,210	.....	.....
(d) Ditto, Indian	13,272	8,924	14,177	9,972	905	1,048	.....	.....
(e) Others	3,075	2,528	4,079	3,590	1,004	1,067	.....	.....
Chemicals, excepting saltpetre	6,595	5,284	6,195	4,218	.....	931	400	.....
Drugs—								
1.—Intoxicating, other than opium	939	386	110	115	.....	.....	829	271
2.—Non-intoxicating	7,518	5,320	5,211	4,492	.....	.....	2,307	828
Dyes and Tans—								
1.—Al (Morinda citrifolia)	407	229	78	10	73	10	.....	.....
2.—Alizarine and aniline dyes	1,538	630	2,836	1,251	978	421	140	5
3.—Cutch	3,293	2,883	3,972	3,039	690	156	.....	.....
4.—Indigo	20,721	4,526	17,103	2,928	.....	.....	3,619	1,598
5.—Myrabolams	18,375	1,871	25,209	1,449	6,834	78	.....	.....
6.—Tanning barks	15,303	9,220	13,534	8,216	.....	.....	2,768	994
7.—Turmeric	15,503	7,308	14,558	7,398	.....	80	945	.....
8.—Others								
Fodder—								
1.—Oilcake	49,908	9,007	73,105	9,704	23,197	697	.....	.....
2.—Hay, straw and grass	40,914	6,753	38,581	4,115	.....	.....	2,333	2,637
Fruits and vegetables, fresh	10,462	3,730	37,728	6,196	27,266	2,466	.....	.....
Grain and Pulse—								
1.—Wheat	6,58,503	2,42,676	6,35,796	1,41,494	.....	.....	2,22,716	1,01,182
2.—Wheat flour	69,072	14,457	71,686	13,812	17,614	.....	.....	1,675
3.—Rice in the husk	1,01,935	8,457	43,451	4,676	.....	.....	58,484	3,611
4.—Rice not in the husk	4,97,551	63,410	6,29,090	97,967	1,31,239	34,577	.....	.....
5.—Jowar and bajra	13,908	1,507	55,020	7,196	41,412	5,691	.....	.....
6.—Gram and pulse	3,36,102	88,291	5,18,164	1,14,558	1,82,062	26,267	.....	.....
7.—Others	1,18,148	19,696	2,74,203	72,477	2,56,054	52,781	.....	.....
Hides and Skins—								
1.—Hides of cattle	74,604	46,406	92,346	56,109	17,742	9,703	.....	.....
2.—Skins of sheep, &c.	37,250	20,491	39,640	23,370	2,390	2,879	.....	.....
Horns	775	382	1,857	519	1,082	137	.....	.....
Hemp (Indian) and other fibres (excluding jute)	96,744	23,610	1,12,944	39,783	15,100	17,173	.....	.....
Jute—								
1.—Raw	1,98,599	32,806	1,17,873	28,473	.....	.....	80,726	4,333
2.—Gunny-bags and cloth	55,987	40,819	1,48,136	77,083	56,179	36,264	.....	.....
Lac	34,450	11,054	41,647	23,319	7,197	14,765	.....	.....
Leather—								
1.—Unwrought	2,414	3,954	1,276	2,179	.....	.....	1,140	1,775
2.—Wrought, excepting boots and shoes	1,021	670	991	680	.....	10	340	.....
Liquors—								
1.—Ale and Beer	17,021	5,408	15,387	3,579	.....	.....	1,634	1,829
2.—Spirits and wines of all kinds, including country spirit	5,485	6,073	5,021	5,556	.....	.....	464	489
3.—All other sorts, including toddy and fermented liquor, other than ale and beer	676	99	647	145	71	46	.....	.....
Metals—								
1.—Brass, unwrought	3,715	2,410	2,969	1,260	.....	.....	746	1,150
2.— Do., wrought	17,057	8,207	15,810	7,345	.....	.....	1,247	862
3.—Copper, unwrought	917	1,239	535	509	.....	.....	382	730
4.— Do., wrought	3,505	2,764	1,317	1,253	.....	.....	2,188	1,501
5.—Iron and steel—								
(a) Cast	84,251	12,905	1,37,448	20,078	1,03,197	17,775	.....	.....
(b) Unwrought	77,743	5,712	1,12,689	7,153	34,946	1,441	.....	.....
(c) Wrought	1,33,897	50,342	1,06,806	44,825	.....	.....	17,889	5,516
(d) Manufactures of iron and steel	47,451	15,491	28,830	15,421	.....	.....	18,621	170
6.—Zinc and spelter	4,321	2,926	2,553	1,402	.....	.....	1,768	1,524
7.—Others	10,657	7,481	12,218	9,086	1,576	1,605	.....	.....
Oils—								
1.—Kerosine	1,79,838	57,880	2,49,383	61,826	69,546	23,946	.....	.....
2.—Castor	5,407	934	6,315	1,062	2,818	748	.....	.....
3.—Cocoanut	3,411	899	3,445	1,109	34	210	.....	.....
4.—Mustard and rape	6,315	2,555	12,093	3,739	5,068	1,214	.....	.....
5.—Others	3,608	1,735	6,569	3,687	2,961	1,952	.....	.....
Oilseeds—								
1.—Castor	43,280	10,552	49,054	14,172	5,734	3,619	.....	.....
2.—Earthnuts	1,104	313	1,146	178	42	.....	.....	135
3.—Linseed	46,245	10,373	93,380	24,496	47,136	14,123	.....	.....
4.—Poppy	11,128	2,650	6,854	1,941	.....	.....	4,274	709
5.—Rape and mustard	2,23,304	60,706	2,26,574	54,172	3,270	.....	.....	6,534
6.—Til or jinjili	1,08,481	27,374	46,780	11,286	.....	.....	58,681	16,088
7.—Others	60,087	11,991	66,558	13,461	6,471	540	.....	.....
Opium	86	62	15,017	14,038	14,581	13,989	.....	.....
Paper and pasteboard	26,369	27,863	17,016	18,767	.....	.....	9,353	9,101
Provisions—								
1.—Dried fruits and nuts	13,538	7,225	14,307	8,150	2,769	925	.....	.....
2.—Ghee	52,206	43,538	60,388	39,238	8,182	.....	.....	4,300
3.—Potatoes	94,180	15,769	1,12,943	24,706	18,763	8,937	.....	.....
4.—Others	49,013	30,363	46,735	23,356	3,723	.....	.....	7,007
Railway plant & rolling-stock carried for the public & foreign railways—								
1.—Locomotives, engines and tenders and parts thereof	1,483	179	.....	.....	.....	.....	1,483	179
2.—Carriages and trucks and parts thereof	1,033	379	.....	.....	.....	.....	1,033	379
3.—Materials—								
(a) Steel rails and fish-plates	1,12,919	23,084	40,531	12,767	.....	.....	72,388	10,317
(b) Sleepers and keys of steel and cast-iron	340	66	62,906	7,333	62,566	7,269	.....	.....
(c) Other sorts	4,67,079	49,066	3,58,021	33,071	.....	15,994	1,09,058	.....
Salt	5,17,511	1,05,321	3,79,025	64,489	.....	.....	1,38,486	37,832

Staples.	1904.		1905.		Increase.		Decrease.	
	Weight.	Freight.	Weight	Freight.	Weight.	Freight.	Weight.	Freight.
	Mds.	Rs.	Mds.	Rs.	Mds.	Rs.	Mds.	Rs.
Saltpetre and other saline substances—								
1.—Saltpetre	70,413	28,195	33,762	16,610	.....	.....	36,651	11,585
2.—Other saline substances	47,076	14,411	46,006	13,987	.....	.....	1,070	424
Silk—								
1.—*Raw—*								
(a) Foreign	.....	.....	.....	.....	.....	.....	.....	.....
(b) Indian	3,261	1,407	3,446	1,766	185	359	.....	.....
2.—*Piece-goods—*								
(a) Foreign	48	37	.....	.....	.....	.....	48	37
(b) Indian	253	433	150	254	.....	.....	103	179
Spices—								
1.—Betelnuts	26,469	20,915	24,965	19,803	.....	.....	1,504	112
2.—Cardamoms	1,800	1,333	1,285	1,064	.....	.....	515	269
3.—Chillies	53,312	41,341	38,459	18,092	.....	.....	14,853	23,249
4.—Ginger	2,505	637	2,438	673	.....	.....	67	14
5.—Pepper	2,643	2,196	2,970	2,503	327	307	.....	.....
6.—Others	12,870	6,425	22,755	13,923	9,585	7,298	.....	.....
Stone and lime	6,92,355	97,800	9,90,556	1,98,615	2,98,201	1,00,815	.....	.....
Sugar—								
1.—Refined	68,801	29,803	49,137	20,823	.....	.....	19,564	8,979
2.—Unrefined—								
(a) Sugar	1,52,091	52,745	1,69,427	33,774	17,336	.....	.....	18,971
(b) *Gur, rab*, jaggree, molasses and other saccharine produce ...	4,33,203	77,674	5,95,129	1,01,640	1,61,926	23,966	.....	.....
Tea—								
1.—Foreign	.....	.....	29	42	29	42	.....	.....
2.—Indian	2,207	1,481	1,936	2,220	.....	739	271	.....
Tobacco	37,778	11,956	19,212	15,593	1,434	3,637	.....	.....
Wood—								
1.—Timber, unwrought	1,69,429	20,374	1,32,213	16,606	.....	.....	37,216	3,068
2.—Manufactures	20,251	6,513	15,569	6,036	.....	.....	4,682	476
Wool—								
1.—Raw	1,662	1,264	3,290	1,802	1,628	538	.....	.....
2.—Manufactured—								
(a) Carpets and rugs	1,099	1,537	1,112	1,402	13	.....	.....	135
(b) Piece-goods, European	23	42	1,506	93	1,483	51	.....	.....
(c) Ditto, Indian	507	496	782	650	275	154	.....	.....
(d) Other sorts of manufactures ...	1,893	1,699	4,838	1,844	2,956	146	.....	.....
All other articles of merchandise—								
1.—Bones	52,271	15,779	1,06,685	23,988	53,414	8,209	.....	.....
2.—Firewood	88,012	6,052	85,287	5,703	.....	.....	2,025	349
3.—Indigo seed	33,134	6,000	13,465	2,331	.....	.....	19,669	3,669
4.—Paints and colours	2,228	1,486	2,705	2,206	477	720	.....	.....
5.—Seeds other than oilseeds	5,813	818	7,021	992	1,208	174	.....	.....
6.—Others	19,59,212	3,31,425	11,60,087	2,33,206	.....	.....	7,99,125	99,219
Total ...	2,36,82,540	40,32,696	2,25,12,649	40,56,399	.....	23,703	10,69,891	.....
[illegible]								
Military stores	51,042	37,877	35,902	60,751	.....	22,874	15,050	.....
Coal by railway	12,67,753	62,506	9,69,644	67,844	.....	.....	2,98,089	14,662
Railway materials	22,83,022	74,383	34,93,083	87,552	12,10,061	13,170	.....	.....
Live-stock	.....	5,829	.....	30,014	.....	121,185	.....	.....
Total ...	2,71,84,357	42,36,761	2,70,11,368	43,02,560	.....	65,799	1,73,969	.....

J. E. P. Hore,

for *Chief Auditor.*

Traffic Audit Office, Goods Division, Calcutta, *the 24th May 1905.*

BENGAL CENTRAL RAILWAY COMPANY, LIMITED.

Abstract of principal Commodities carried over the Bengal Central Railway during the month of March 1905, as compared with the same month of previous year.

Articles.	1905.		1904.		Total.		Increase.	Decrease.
	Up.	Down.	Up.	Down.	1905.	1904.		
	Tons.	Tons.	Tons.	Tons.	Tons.	Tons.	Tons.	Tons.
I.—Apparel, including drapery, haberdashery, millinery, uniforms, accoutrements, boots and shoes.	4	.....	2	.....	4	2	2	.....
II.—Coal and Coke carried for the Public and Foreign Railways.	3,691	.....	6,070	.....	3,691	6,070	.....	2,379
III.—Cotton—								
1. Raw	.....	.....	.....	3	.....	3	.....	3
2. Manufactured—								
(a) Twist and yarn, European	63	.....	39	.....	62	39	23	.....
(b) Ditto, Indian	.....	.....	.....	1	.....	1	.....	1
(c) Piece-goods, European	223	.....	235	.....	223	235	.....	12
(d) Ditto, Indian	1	.....	.....	.....	1	.....	1	.....
(e) Others	.....	.....	.....	.....	.....	.....	.....	.....
IV.—Chemicals, excepting saltpetre	1	.....	.....	.....	1	.....	1	.....
V.—Drugs—								
1. Intoxicating, other than opium	.....	.....	.....	.....	.....	.....	.....	.....
2. Non-intoxicating—								
(a) Medical preparations	2	.....	1	.....	2	1	1	.....
(b) Others	1	.....	.....	.....	1	.....	1	.....
VI.—Dyes and Tans—								
1. Indigo	.....	.....	.....	.....	.....	.....	.....	.....
2. Myrabolams	.....	.....	.....	.....	.....	.....	.....	.....
3. Cutch	.....	.....	.....	.....	.....	.....	.....	.....
4. Turmeric	2	3	3	21	5	24	.....	19
5. Alizarine and Aniline Dyes	.....	.....	.....	.....	.....	.....	.....	.....
6. Al (Morinda Citrifolia)	.....	.....	.....	.....	.....	.....	.....	.....
7. Tanning barks	.....	.....	.....	.....	.....	.....	.....	.....
8. Others	.....	.....	179	.....	.....	179	.....	179
VII.—Fodder—								
1. Oilcake	155	.....	8	6	155	14	141	.....
2. Hay, straw and grass	3	.....	4	1	3	6	.....	2
VIII.—Fruits and vegetables, fresh	803	175	1,068	250	1,068	1,918	.....	850
IX.—Grain and Pulse—								
1. Wheat	5	29	1	81	34	82	.....	48
2. Rice in the husk	16	284	20	633	300	653	.....	353
3. Do. not in the husk	.....	.....	.....	.....	.....	.....	.....	.....
4. Jawar and bajra	40	1,110	50	910	1,150	960	190	.....
5. Gram and pulse	39	1	28	1	30	29	1	.....
6. Wheat flour	.....	.....	.....	.....	.....	.....	.....	.....
7. Others	.....	.....	.....	.....	.....	.....	.....	.....
X.—Hides and Skins—								
1. Hides of cattle—								
(a) Dressed or tanned	.....	.....	.....	.....	.....	.....	.....	.....
(b) Raw	.....	33	.....	41	33	41	.....	8
2. Skins of sheep and other animals—								
(a) Dressed or tanned	.....	.....	.....	.....	.....	.....	.....	.....
(b) Raw	.....	9	.....	7	9	7	2	.....
XI.—Horns	.....	.....	.....	.....	.....	.....	.....	.....
XII.—Hemp (Indian) and other fibres, excluding jute.	.....	27	.....	.....	27	.....	27	.....
XIII.—Jute—								
1. Raw	.....	612	.....	616	612	616	.....	4
2. Gunny-bags and cloth	25	12	25	6	37	31	6	.....
XIV.—Lac	.....	.....	.....	.....	.....	.....	.....	.....
XV.—Leather—								
1. Unwrought	.....	.....	.....	.....	.....	.....	.....	.....
2. Wrought, excepting boots and shoes.	.....	.....	.....	.....	.....	.....	.....	.....
XVI.—Liquors—								
1. Ale and beer	.....	.....	.....	.....	.....	.....	.....	.....
2. Wine and spirit of all kinds, including country spirit.	3	.....	3	.....	3	3	.....	.....
3. All other sorts, including toddy and fermented liquor, other than ale and beer.	.....	.....	.....	.....	.....	.....	.....	.....
XVII.—Metals—								
1. Copper, unwrought	.....	7	.....	.....	7	.....	7	.....
2. Brass, ditto	.....	.....	.....	5	.....	5	.....	5
3. Copper, wrought	.....	.....	.....	7	7	12	.....	5
4. Brass, ditto	7	.....	5	.....	.....	.....	.....	.....
5. Iron and steel—								
(a) Cast	4	.....	377	.....	4	377	.....	373
(b) Unwrought	.....	.....	.....	.....	.....	.....	.....	.....
(c) Wrought	83	1	81	.....	84	82	2	.....
(d) Manufactured	5	.....	1	.....	5	1	4	.....
6. Others	47	35	675	32	82	707	.....	625
XVIII.—Oils—								
1. Kerosine	286	.....	205	6	286	211	75	.....
2. Castor	.....	.....	.....	.....	.....	.....	.....	.....
3. Cocoanut	10	.....	17	.....	10	17	.....	7
4. Mustard and rape	118	.....	109	.....	118	109	9	.....
5. Others	.....	.....	.....	.....	.....	.....	.....	.....
XIX.—Oilseeds—								
1. Linseed	.....	279	10	316	279	325	.....	46
2. Rape and mustard	271	61	612	60	332	672	.....	140
3. Til or jinjili	.....	.....	.....	.....	.....	.....	.....	.....
4. Poppy	.....	.....	.....	.....	.....	.....	.....	.....
5. Marthnute	.....	.....	.....	.....	.....	.....	.....	.....
6. Castor	.....	.....	.....	.....	.....	.....	.....	.....
7. Others	.....	6	.....	.....	6	.....	6	.....
XX.—Opium	.....	.....	.....	.....	.....	.....	.....	.....
XXI.—Paper and Pasteboard	2	.....	12	.....	2	12	.....	10
XXII.—Provisions—								
1. Ghee	5	.....	5	.....	5	5	.....	.....
2. Dried fruits and nuts	.....	.....	.....	.....	.....	.....	.....	.....
3. Others	.....	15	.....	4	15	4	11	.....

ARTICLES.	1905.		1904.		TOTAL.		Increase.	Decrease.
	Up.	Down.	Up.	Down.	1905.	1904.		
	Tons.	Tons.	Tons.	Tons.	Tons.	Tons.	Tons.	Tons.
XXIII.—Railway plant and rolling-stock carried for the Public and Foreign Railways—								
1. Locomotives, Engines, and tenders, and parts thereof.	.....	.....	.....	.....	.....	.....	.....	.....
2. Carriages and trucks, and parts thereof.	.....	.....	.....	.....	.....	.....	.....	.....
3. Materials—								
(a) Steel rails and fish-plates	.....	.....	.....	.....	.....	.....	.....	.....
(b) Sleepers and keys of steel and cast-iron.	.....	.....	.....	.....	.....	.....	.....	.....
(c) Other sorts	15	.....	.....	.....	15	.....	15	.....
XXIV.—Salt	383	.....	347	.....	383	347	36	.....
XXV.—Saltpetre and other saline substances—								
1. Saltpetre	.....	.....	.....	.....	.....	.....	.....	.....
2. Other saline substances	9	.....	6	.....	9	6	3	.....
XXVI.—Silk—								
1. Raw—								
(a) Foreign	.....	.....	.....	.....	.....	.....	.....	.....
(b) Indian	.....	.....	.....	.....	.....	.....	.....	.....
2. Silk piece-goods—								
(a) Foreign	.....	.....	.....	.....	.....	.....	.....	.....
(b) Indian	.....	.....	.....	.....	.....	.....	.....	.....
XXVII.—Spices—								
1. Betelnuts	4	511	3	742	515	745	.....	230
2. Pepper	.....	.....	.....	.....	.....	.....	.....	.....
3. Ginger	.....	.....	.....	.....	.....	.....	.....	.....
4. Chillies	9	15	4	15	24	19	5	.....
5. Cardamoms	.....	.....	.....	.....	.....	.....	.....	.....
6. Others	3	77	1	18	80	19	61	.....
XXVIII.—Stone and lime	1,239	.....	296	.....	1 239	296	943	.....
XXIX.—Sugar—								
1. Refined or crystallised, including sugarcandy.	55	.....	62	.....	55	62	.....	7
2. Unrefined—								
(a) Sugar	86	545	16	174	631	192	439	.....
(b) Gur, rab, molasses, jaggery, and other saccharine produce.	4	227	.....	51	231	51	180	.....
XXX.—Tea—								
1. Foreign	.....	.....	.....	.....	.....	.....	.....	.....
2. Indian	.....	.....	.....	.....	.....	.....	.....	.....
XXXI.—Tobacco—								
1. Unmanufactured	140	7	68	18	147	86	61	.....
2. Manufactured—								
(a) Cigars	.....	.....	.....	.....	.....	.....	.....	.....
(b) Other sorts	2	.....	7	.....	2	7	.....	5
XXXII.—Wood—								
1. Timber, unwrought	90	343	125	151	433	276	157	.....
2. Manufactures	23	118	23	98	141	121	20	.....
XXXIII.—Wool—								
1. Raw	.....	.....	.....	.....	.....	.....	.....	.....
2. Manufactured—								
(a) Carpets and rugs	.....	.....	.....	.....	.....	.....	.....	.....
(b) Piece-goods, European ...	.....	.....	.....	.....	.....	.....	.....	.....
(c) Ditto, Indian ...	.....	.....	.....	.....	.....	.....	.....	.....
(d) Other sorts of manufactures.	.....	.....	.....	.....	.....	.....	.....	.....
XXXIV.—All other articles of merchandise ...	561	300	255	409	861	664	197	.....
Total ...	8,617	4,842	11,461	4,628	13,459	16,145	2,627	5 311

C. L'E. COLTHURST,
Chief Auditor and Accountant.

CALCUTTA, *the 26th May 1905.*

Weekly Return of Traffic Receipts on Indian Railways.

EAST INDIAN RAILWAY.

Approximate Return of Traffic for week ended 6th May 1905 on 1,962·25 miles open.

	Coaching Traffic.		Merchandise and Mineral Traffic.		Other earnings (estimated).	Total earnings.	Traffic Train-miles run.		
	No. of passengers.	Coaching receipts.	Weight carried.	Receipts.			Coaching.	Merchandise.	Total.
		Rs. A. P.	Mds. S	Rs. A. P.	Rs. A. P.	Rs. A. P.			
Total traffic for the week ...	403,716	3,60,243 0 0 (a)	63,90,696 0	11 04,167 0 0	31,805 0 0	15,05,215 0 0	116,675	187,115	303,790
Or per mile of railway	...	183 2 9	...	562 11 4	16 3 4	767 1 5			
For previous 17 weeks of half-year	7,061,320*	70,00,668 0 0*	11,09,68,641 0†	1,83,41,019 0 0†	5,46,458 0 0‡	2,58,89,085 0 0	1,953,209§	3,044 209§	4 997,568
Total for 18 weeks	7,465,036	73,60,911 0 0	11,73,67,737 0	1,94,46,086 0 0	5,78,263 0 0	2,73 94,240 0 0	2,069 944	3,231,414	5,301,358
COMPARISON.									
Total for corresponding week of previous year	501,679	4,16,307 13 2	68,98,461 30	11,63,613 9 10	37,265 3 11	16,17,185 10 11	109,800	197,920	307,810
Per mile of railway corresponding week of previous year	.....	215 3 3	.....	601 8 1	19 4 3	835 15 7	.....	... ..	.....
Total for corresponding 18½ weeks of previous year	7,741,137	78,44,987 9 10	11,65,43,344 0	1,90,71,745 6 5	5,67,391 11 5	2,71,84,004 11 5	2,075,054	3,466,225	5,541,279

(a) The decrease is chiefly due to greater movement of pilgrims in 1904.
(b) The decrease is in grain and seed traffic.
* Added No. of passengers 3,949 and Rs. 13,474 } On account of difference between the approximate and audited figures for the week ended 25th
† Deducted Mds. 67,334 ,, ,, 17,033 } March 1905.
‡ Ditto ,, 1,593
§ Audited figures up to 25th March 1905.

1905. *Abstract of progressive weekly returns of all earnings for 1905 in comparison with 1904.*

Open mileage.	Period.	Coaching Traffic.		Merchandise and Mineral Traffic.		Other earnings.	Total.	Per mile of railway.	Train mileage.	
		No. of passengers	Rs.	Mds.	Rs.	Rs.	Rs	Rs.	No.	Rate. Rs A. P
*1,962 87	Week ended 7th Jan. ...	373,540	3,00,660	66,67,708	11,43,248	30,547	15,54,495	809	297,843	5 4 1
*1,962 87	,, ,, 14th ,, ...	366,534	4,00,144	61,44,640	11,54,861	30,874	16,85,969	880	307,865	5 2 5
*1,962 87	,, ,, 21st ,, ...	389,101	4,37,893	69,80,448	11,86,536	34,487	16,88,916	853	309,197	5 5 4
*1,962 87	,, ,, 28th ,, ...	387,663	3,76,282	71,66,650	11,58,573	33 327	15 67,182	811	308,017	5 3 0
*1,962 87	,, ,, 4th Feb. ...	397,461	3,94,662	66,99,851	10,85,994	33,639	15,15 295	784	288,579	5 1 10
*1,962 87	,, ,, 11th ,, ...	416,257	4,72,*51	57,34,048	9,76,832	32,929	14,82,012	746	281,548	5 1 11
*1,962 87	,, ,, 18th ,, ...	401,777	3,88,209	66,57,714	10,17,406	31,113	14,84,728	748	286,801	5 0 6
*1,962 87	,, ,, 25th ,, ...	468,547	4,37,183	75,31,370	11,52,060	32,763	16,21 946	831	294,820	5 8 0
*1,940 88	,, ,, 4th Mar. ...	494,324	4,81,907	67,71,735	10,68,343	33,426	15,83,676	795	283,461	5 7 6
*1,962 25	,, ,, 11th ,, ...	480,249	4,71 986	66,09,797	10 04,112	33,597	15,09,716	769	285,617	5 3 3
*1,962 25	,, ,, 18th ,, ...	427,637	4,41,117	67,26,121	11,73,578	30,761	16,45,456	839	292,157	5 10 1
*1,962 25	,, ,, 25th ,, ...	399,793	3,90,280	64,33,977	11,04,848	31,257	15,26,385	778	301,334	5 1 1
1,962 25	,, ,, 1st April ...	406,493	4 03,745	66,50,320	11,73,351	32,105	16,70,201	850	304,330	5 2 7
1,962 25	,, ,, 8th ,,	394,974	4,19,535	64,39,907	9,66,083	32,065	14,80,282	754	290,108	5 14 4
1,962 25	,, ,, 15th ,,	413,907	3,75,147	64,65,379	9,34,280	32,272	13,41,699	684	284,326	4 11 6
1,962 25	,, ,, 22nd ,, ...	417,345	4,04,497	62 71,071	9,70 379	31,196	14,07,003	717	283,130	4 15 6
1,962 25	,, ,, 29th ,, ...	394,691	3,64,239	67,67,042	11,23,763	32,090	15,20,188	784	288,562	5 5 4
1,962 25	,, ,, 6th May ...	403,716	3,60,243	63,90,696	11,04,167	31,805	15,05,215	767	303,790	4 15 3
	Totals up to date ...	7,465,036	73,60,911	11,73,67,737	1,94,46,086	5,78,263	2,73,94,240	781	5,301,358	5 3 8

Abstract of progressive weekly returns of all earnings for 1905 in comparison with 1904—concluded. 1904.

		No. of passengers.	Rs.	Mds.	Rs.	Rs.	Rs	Rs	No	Rate. Rs. A P.
1,934'49	First 9 days of Jan. ...	461,139	4,56 615	79,11,018	12,96,313	36,684	17,91,611	926	378 ·28	4 11 8
1,934'49	Week ended 16th ,, ...	421,661	3,90,514	61,02,305	9,99,600	31,739	14,30,853	740	294,484	4 14 8
1,934'49	,, ,, 23rd ,, ...	426,145	4,40,358	55,34,928	9,78,799	30,060	14,49,216	749	*92,713	4 14 10
1,934'49	,, ,, 30th ,, ...	409,009	4,21,040	53,70,224	10,03,302	30,370	14,50,711	750	299,105	4 15 5
1,934 49	,, ,, 6th Feb. ...	436,198	4,35,908	66,63,167	10,84,782	29,529	15,48,219	800	30 ,477	5 1 1
1,934 49	,, ,, 13th ,, ...	424 670	4,15,179	66,55 000	10,06,101	30,467	14,51,737	750	296,983	4 14 3
1,934'49	,, ,, 20th ,, ...	430,236	4,44,971	65,09,325	10,54,190	31,553	15,30,714	791	305,705	5 0 6
1,934 49	,, ,, 27th ,, ...	401,527	4,40,783	66,53 951	10,35,099	29,956	15,14,839	783	306,945	4 15 5
1,934'49	,, ,, 5th Mar. ...	401,443	3,99,864	66,09,979	9,72,971	29,215	14,02,050	725	309,736	4 8 5
1,934'49	,, ,, 12th ,, ...	444,408	4,52,664	66,17,353	10,19,118	29,031	15,00 813	776	308,302	5 0 6
1,934 49	,, ,, 19th ,, ...	418,953	4,37,151	58,34,199	10,08 086	28,835	14,74,092	762	305,675	4 15 5
1,934'49	,, ,, 26th ,, ...	387,307	4,18 542	57,18,283	10,04,891	31,106	14,44,949	746	299,693	4 13 1
1,934 49	,, ,, 2nd April	366,858	3,91,528	64,10,4n6	10,15,931	28 205	14 25,464	743	303,891	4 10 -
1,934'49	,, ,, 9th ,, ...	384,445	3,84,197	64,20,788	10,40,690	30,561	14 55,448	754	308,978	4 11 10
1,934'49	,, ,, 17th ,, ...	397,906	3,66,484	67,(3 330	11,01,955	35,849	15,02,970	777	3 0,105	4 15 7
1,934'49	,, ,, 23rd ,, ...	446,131	4,15,377	58,77,940	11,48,230	35,6 6	15 97,251	826	305,419	5 1 3
1,934'49	,, ,, 30th ,, ...	449,725	4,11,579	60,88,016	11,44 984	36,206	15,92,849	821	317,171	5 0 3
1,934 49	,, ,, 7th May ...	501,679	4,16,308	68,98,461	11,63,613	37,265	16 17,186	836	317,510	5 4 3
	Totals up to date ...	7,741,137	78,44 938	11,65,43,344	1,90,71,745	5,67,392	2,71,84,093	788	5,541,279	5 14 6

* Audited figures.

TARKESSUR BRANCH RAILWAY.

Approximate Return of Traffic for week ended 6th May 1905 on 22·23 miles open.

	Coaching Traffic.		Merchandise and Mineral Traffic.		Other earnings (estimated).	Total earnings.	Traffic Train-miles run.		
	No. of passengers.	Coaching receipts.	Weight carried.	Receipts.			Coaching.	Merchandise.	Total.
		Rs. A. P.	Mds. s.	Rs. A. P.	Rs. A. P.	Rs. A. P.			
Total traffic for the week ...	28,247	5,618 0 0	23,857 0	513 0 0	8 0 0	6,436 0 0	963	225	1,184
Or per mile of railway ...	.....	252 11 7	.....	23 8 5	0 5 9	289 9 9	.....	.....	.....
For previous 17 weeks of half-year	447,493*	1,13,043 0 0*	3,35,128 0†	13,161 0 0†	133 0 0‡	1,27,337 0 0	17,224§	3,824§	21,048
Total for 18 weeks ...	469,740	1,19,661 0 0	3,58,985 0	13,993 0 0	141 0 0	1,33,695 0 0	18,187	4,049	22,236
COMPARISON.									
Total for corresponding week of previous year.	25,060	6,406 7 10	25,061 30	833 0 0	15 7 3	7,314 15 1	1,038	160	1,198
Per mile of railway corresponding week of previous year.	.....	290 14 5	.....	37 7 7	0 11 1	329 0 11	.....	.....	.....
Total for corresponding 18½ weeks of previous year.	498,979	1,28,036 13 2	4,21,786 30	15,218 9 0	161 0 3	1,43,416 6 5	19,400	2,996	22,396

* Added No. of passengers 1,393 and Rs. 593
† Deducted Mds. 180 ,, ,, 27
‡ Do. ,, ,, 1
} On account of difference between the approximate and audited figures for the week ended 25th March 1905.
§ Audited figures up to 25th March 1905.

1905. *Abstract of progressive weekly returns of all earnings for 1905 in comparison with 1904.*

Open mileage.	Period.	Coaching Traffic.		Merchandise and Mineral Traffic.		Other earnings.	Total.	Per mile of railway.	Train mileage.	
		No. of passengers.	Rs.	Mds.	Rs.	Rs.	Rs.	Rs.	No.	Rate. Rs. A. P.
*22·23	Week ended 7th Jan. ...	20,210	4,765	21,816	805	6	5,597	253	1,184	4 15 5
*22·23	,, ,, 14th ,, ...	21,803	4,931	18,783	692	4	5,637	249	1,188	4 10 7
*22·23	,, ,, 21st ,, ...	23,881	5,288	23,046	854	6	6,128	276	1,186	5 2 8
*22·23	,, ,, 28th ,, ...	21,754	4,994	19,786	726	7	5,727	253	1,186	4 14 7
*22·23	,, ,, 4th Feb. ...	20,048	4,686	15,613	583	11	5,251	234	1,188	4 8 9
*22·23	,, ,, 11th ,, ...	21,217	5,189	20,771	837	11	6,000	270	1,184	5 0 10
*22·23	,, ,, 18th ,, ...	19,637	4,830	18,949	683	8	5,489	246	1,189	4 9 6
*22·23	,, ,, 25th ,, ...	20,194	5,395	20,704	1,093	8	7,450	334	1,186	6 4 1
*22·23	,, ,, 4th Mar. ...	37,973	10,648	30,590	1,208	15	11,865	534	1,344	8 13 6
*22·23	,, ,, 11th ,, ...	30,170	7,718	19,399	779	7	8,504	383	1,487	5 15 4
*22·23	,, ,, 18th ,, ...	25,641	6,629	20,130	805	7	6,934	312	1,186	5 13 5
*22·23	,, ,, 25th ,, ...	25,683	6,308	16,229	619	7	6,934	312	1,184	5 13 7
22·23	,, ,, 1st April ...	24,873	6,018	17,352	734	8	6,750	304	1,186	5 10 11
22·23	,, ,, 8th ,, ...	32,437	9,141	16,050	913	8	10,061	453	1,198	8 7 6
22·23	,, ,, 15th ,, ...	50,234	15,536	13,230	562	9	16,097	724	1,672	9 10 0
22·23	,, ,, 22nd ,, ...	33,039	8,943	18,643	730	8	9,681	301	1,188	5 10 0
22·23	,, ,, 29th ,, ...	28,566	6,574	15,568	721	7	8,302	243	1,188	5 4 10
22·23	,, ,, 6th May ...	28,247	5,618	23,857	812	8	6,436	290	1,188	5 6 8
	Total up to date ...	469,740	1,19,661	3,58,985	13,993	161	1,33,695	334	22,230	6 0 2

Abstract of progressive weekly returns of all earnings for 1905 in comparison with 1904—concluded *1904.*

		No. of passengers.	Rs.	Mds.	Rs.	Rs.	Rs	Rs.	No.	Rate. Rs. A. P.
22·23	First 7 days of Jan. ...	23,125	6,268	25,849	1,003	14	7,285	328	1,540	4 11 8
22·23	Week ended 16th ,, ,,	19,705	4,453	17,996	682	9	5,074	228	1,188	4 4 4
22·23	,, ,, 23rd ,, ...	21,881	5,229	18,703	718	8	5,939	267	1,184	5 0 0
22·23	,, ,, 30th ,, ...	24,150	5,824	23,322	788	1	6,613	297	1,186	5 9 1
22·23	,, ,, 6th Feb. ...	24,196	7,052	25,798	796	32	7,879	354	1,188	6 10 1
22·23	,, ,, 13th ,, ...	25,080	6,151	20,572	602	6	6,816	306	1,188	5 8 6
22·23	,, ,, 20th ,, ...	39,816	10,601	32,309	738	4	11,397	513	1,496	7 9 11
22·23	,, ,, 27th ,, ...	25,502	6,144	24,750	896	10	7,052	317	1,188	5 15 0
22·23	,, ,, 5th Mar. ...	28,909	6,781	19,187	686	6	7,411	333	1,188	6 3 10
22·23	,, ,, 12th ,, ...	34,231	8,986	27,310	963	7	9,956	313	1,188	8 13 8
22·23	,, ,, 19th ,, ...	35,438	8,253	26,660	1,043	11	7,336	330	1,198	6 2 9
22·23	,, ,, 26th ,, ...	32,108	8,490	19,693	775	15	6,279	283	1,186	5 4 7
22·23	,, ,, 2nd April ...	25,604	6,336	26,484	1,078	9	7,423	334	1,144	6 7 10
22·23	,, ,, 9th ,, ...	39,679	11,751	30,944	1,133	10	12,894	580	1,238	10 7 4
22·23	,, ,, 16th ,, ...	24,249	14,151	21,814	787	18	14,956	680	1,486	12 1 9
22·23	,, ,, 23rd ,, ...	14,107	6,033	24,097	896	12	6,871	309	1,188	5 12 6
22·23	,, ,, 30th ,, ...	16,740	6,785	24,649	963	4	7,752	349	1,188	6 8 5
22·23	,, ,, 7th May ...	28,960	6,460	25,062	833	16	7,315	329	1,188	6 1 6
	Totals up to date ...	498,979	1,28,036	4,21,787	15,219	161	1,43,416	353	22,396	6 6 5

* Audited figures.

DELHI-UMBALLA-KALKA RAILWAY.

Approximate Return of Traffic for week ended 6th May 1905 on 162·36 miles open.

	Coaching Traffic.		Merchandise and Mineral Traffic.		Other earnings (estimated).	Total earnings.	Traffic Train-miles run.		
	No. of passengers.	Coaching receipts.	Weight carried.	Receipts.			Coaching.	Merchandise.	Total.
		Rs. A. P.	Mds. S.	Rs. A. P.	Rs. A. P.	Rs. A. P.			
Total traffic for the week ...	12,695	19,319 0 0	1,55,376 0	13,674 0 0	67 0 0	33,060 0 0	8,925	3,961	12,886
Or per mile of railway	... ..	118 15 10	.....	84 3 6	0 6 7	203 9 11	.....	.. .	.. ..
For previous 17 weeks of half-year	415,307*	3,54,641 0 0*	30,84,904 0†	2,57,607 0 0†	1,574 0 0‡	6,13,882 0 0	154,916§	67,050§	221,966
Total for 18 weeks ..	438,000	3,73,960 0 0	32,40,280 0	2,71,341 0 0	1,641 0 0	6,46,942 0 0	163,841	71,011	234,852
COMPARISON.									
Total for corresponding week of previous year	23,326	21,926 9 4	1,86,413 30	11,090 5 0	56 9 6	32,423 7 10	9,578	3,616	13,194
Per mile of railway corresponding week of previous year ...	.....	130 15 9	.....	68 5 9	0 5 7	199 11 1	.....	... ...	.....
Total for corresponding 18 weeks of previous year ...	470,915	3,96,310 10 1	33,78,461 20	2,34,191 10 6	1,119 9 6	6,31,621 14 1	180,667	67,041	247,708

* Added No. of passengers 1,636 and Rs. 4,206 } On account of difference between the approximate and audited figures for the week ended 25th March
† Do. Mds. 1,23,547 ,, ,, 2,643 } 1905.
‡ Deducted ,, 10
§ Audited figures up to 25th March 1905.

1905 *Abstract of progressive weekly returns of all earnings for 1905 in comparison with 1904.*

Open mileage.	Period.	Coaching Traffic.		Merchandise and Mineral Traffic.		Other earnings.	Total.	Per mile of railway.	Train mileage.	
		No. of passengers.	Rs.	Mds.	Rs.	Rs.	Rs.	Rs.	No.	Rate. Rs. A. P.
*162·36	Week ended 7th Jan. ...	21,203	18,621	2,37,419	11,933	91	30,645	189	12,972	2 5 9
*162·36	,, ,, 14th ,, ...	21,276	18,855	1,18,935	13,806	107	32,493	200	13,092	2 7 9
*162·36	,, ,, 21st ,, ...	20,081	15,778	1,32,369	13,540	109	29,428	181	13,513	2 2 10
*162·36	,, ,, 28th ,, ...	23,039	17,068	1,66,407	17,714	115	34,897	215	13,363	2 10 1
*162·36	,, ,, 4th Feb. ...	21,472	15,996	1,07,184	11,213	79	27,278	169	12,731	2 3 5
*162·36	,, ,, 11th ,, ...	21,231	17,449	2,74,372	17,541	114	35,104	216	12,830	2 11 10
*162·36	,, ,, 18th ,, ...	21,334	16,362	1,87,412	16,671	119	33,038	204	13,241	2 7 11
*162·36	,, ,, 25th ,, ...	20,876	20,440	2,90,280	24,134	114	42,478	263	13,716	3 5 5
*162·36	,, ,, 4th Mar....	20,558	19,721	2,51,441	18,119	58	34,058	215	12,996	2 11 0
*162·36	,, ,, 11th ,, ...	27,230	24,468	1,97,631	18,190	61	39,030	244	13,117	3 0 4
*162·36	,, ,, 18th ,, ...	25,093	24,325	1,97,036	17,477	75	43,077	259	13,891	3 5 6
*162·36	,, ,, 25th ,, ...	24,402	22,435	2,65,014	16,651	85	39,171	241	13,720	2 13 6
162·36	,, ,, 1st April ...	31,329	30,449	1,23,878	14,342	98	44,889	276	14,166	3 2 8
162·36	,, ,, 8th ,, ...	30,346	27,631	1,30,720	15,473	97	43,201	266	13,605	3 3 10
162·36	,, ,, 15th ,, ...	25,864	23,436	1,56,056	12,576	98	36,404	224	13,948	2 13 0
162·36	,, ,, 22nd ,, ...	24,860	21,734	1,17,962	13,753	86	35,563	219	12,233	2 14 6
162·36	,, ,, 29th ,, ...	23,849	19,719	1,79,031	12,609	75	32,403	200	12,219	2 10 4
162·36	,, ,, 6th May ...	23,698	19,519	1,55,376	13,674	67	33,060	204	12,886	2 9 0
	Totals up to date ...	488,000	3,73,960	32,40,280	2,71,341	1,641	6,46,942	221	234,852	2 13 1

Abstract of progressive weekly returns of all earnings for 1905 in comparison with 1904—concld. 1904.

		No. of passengers.	Rs.	Mds.	Rs.	Rs.	Rs.	Rs.	No.	Rate. Rs. A. P.
162·36	First 9 days of Jan. ...	24,246	23,472	1,06,339	12,853	53	36,378	316	16,648	2 1 11
162·36	Week ended 16th ,, ...	18,106	13,980	97,807	12,607	51	26,704	165	12,769	2 1 6
162·36	,, ,, 23rd ,, ...	18,210	14,767	1,03,833	11,427	44	26,238	162	12,924	2 0 6
162·36	,, ,, 30th ,, ...	20,113	15,196	2,06,440	15,841	29	34,066	210	13,068	2 9 9
162·36	,, ,, 6th Feb. .	20,618	15,344	1,33,164	12,005	31	27,380	172	12,638	2 5 1
162·36	,, ,, 13th ,, ...	20,818	17,050	1,41,117	12,811	59	29,920	184	13,346	2 3 10
162·36	,, ,, 20th ,, ...	21,858	19,080	1,40,693	12,316	62	31,938	198	12,747	2 7 4
162·36	,, ,, 27th ,, ...	23,343	19,607.	1,86,496	15,095	43	34,805	214	12,988	2 11 3
162·36	,, ,, 6th Mar. ...	23,770	20,359	1,38,694	10,984	81	31,357	193	13,180	2 6 1
162·36	,, ,, 13th ,, ...	29,883	23,169	96,548	10,402	64	33,635	207	14,439	2 5 3
162·36	,, ,, 19th ,, ...	76,587	45,411	67,059	11,918	133	57,435	351	17,590	3 4 10
162·36	,, ,, 26th ,, ...	35,077	27,534	1,34,080	13,247	101	40,882	264	13,142	3 13 4
162·36	,, ,, 2nd April ...	23,736	26,532	1,71,633	17,010	76	43,908	270	13,745	3 3 7
162·36	,, ,, 9th ,, ...	24,113	23,150	1,01,971	12,588	77	37,815	253	13,899	2 11 6
162·36	,, ,, 16th ,, ...	20,630	22,479	99,825	12,681	60	35,120	216	13,493	2 9 8
162·36	,, ,, 23rd ,, ...	23,174	21,752	1,17,956	13,928	58	35,738	230	13,418	2 10 6
162·36	,, ,, 30th ,, ...	24,203	21,849	1,29,628	13,556	72	35,476	217	13,719	2 9 3
162·36	,, ,, 7th May ...	23,306	21,266	1,34,213	11,100	57	32,423	200	13,914	2 7 11
	Totals up to date ...	470,915	3,96,310	23,78,461	2,34,191	1,120	6,31,621	218	7,704	2 8 9

* Audited figures.

SOUTH BEHAR RAILWAY.

Approximate Return of Traffic for week ended 6th May 1905 on 78·76 miles open.

	Coaching Traffic.		Merchandise and Mineral Traffic.		Other earnings (estimated).	Total earnings.	Traffic Train-miles run.		
	No. of passengers.	Coaching receipts.	Weight carried.	Receipts.			Coaching.	Merchandise.	Total.
		Rs. A. P.	Mds. S.	Rs. A. P.	Rs. A. P.	Rs. A. P.			
Total traffic for the week ...	14,326	6,348 0 0	63,966 0	3,990 0 0	43 0 0	10,381 0 0	1,928	1,457	3,385
Or per mile of railway ...	... ...	80 9 7	... ...	50 10 7	0 8 9	131 13 11	.....	.....	.....
For previous 17 weeks of half-year.	237,806*	1,18,473 0 0*	9,80,200 0†	59,029 0 0†	664 0 0‡	1,78,166 0 0	23,698§	23,572§	51,670
Total for 18 weeks ...	252,133	1,24,821 0 0	10,49,166 0	63,019 0 0	707 0 0	1,88,547 0 0	30,626	25,429	56,055
COMPARISON.									
Total for corresponding week of previous year.	13,409	9,276 14 11	63,308 30	4,581 0 0	59 12 0	13,917 10 11	1,542	1,218	2,760
Per mile of railway corresponding week of previous year.	.....	117 12 7	.....	58 3 7	0 12 2	176 11 4	.....	.....	.....
Total for corresponding 18 weeks of previous year.	249,593	1,22,394 2 10	14,64,703 30	87,879 9 0	656 4 9	2,10,930 0 7	29,809	21,940	51,749

* Added No. of passengers 1,348 and Rs. 842
† Do. Mds. 13,679 and „ 1,065
‡ Do. „ 5
§ Audited figures up to 25th March 1905.

} On account of difference between the approximate and audited figures for the week ended 25th March 1905.

1905. *Abstract of progressive weekly returns of all earnings for 1905 in comparison with 1904.*

Open mileage.	Period.	Coaching Traffic.		Merchandise and Mineral Traffic.		Other earnings.	Total.	Per mile of railway.	Train mileage.	
		No. of passengers.	Rs.	Mds.	Rs.	Rs.	Rs.	Rs.	No.	Rate. Rs. A. P.
*78·76	Week ended 7th Jan. ...	14,197	6,936	55,900	2,849	74	9,859	125	3,471	2 12 6
*78·76	„ „ 14th „ ...	12,404	5,946	63,910	3,823	33	9,802	124	3,306	2 15 5
*78·76	„ „ 21st „ ...	12,226	6,122	38,437	2,850	23	8,995	114	3,306	2 11 6
*78·76	„ „ 28th „ ...	12,209	6,080	36,207	2,835	25	8,940	114	3,227	2 12 4
*78·76	„ „ 4th Feb. ...	12,442	6,170	40,046	3,063	35	10,067	128	3,415	2 15 3
*78·76	„ „ 11th „ ...	13,799	6,498	61,[illegible]	3,007	33	9,538	121	3,765	2 8 6
*78·76	„ „ 18th „ ...	15,635	8,449	56,634	3,301	50	11,800	150	3,287	3 9 5
*78·76	„ „ 25th „ ...	16,050	8,427	58,934	3,539	50	12,016	153	3,099	3 14 0
*78·76	„ „ 4th March ...	17,078	8,434	61,076	3,359	49	11,832	150	2,994	3 8 11
*78·76	„ „ 11th „ ...	15,872	7,318	52,168	3,342	53	10,713	136	3,149	3 6 6
*78·76	„ „ 18th „ ...	13,487	7,431	44,187	3,136	41	10,608	135	2,887	3 10 9
*78·76	„ „ 25th „ ...	15,214	8,008	61,360	4,335	53	12,374	157	2,989	4 2 3
78·76	„ „ 1st April ...	14,939	7,214	49,365	3,539	34	10,887	138	2,756	3 15 2
78·76	„ „ 8th „ ...	13,100	6,581	60,741	3,414	61	9,976	127	2,794	3 9 3
78·76	„ „ 15th „ ...	14,883	6,965	64,689	3,345	44	10,344	131	3,030	3 6 7
78·76	„ „ 22nd „ ...	12,302	5,703	63,685	3,757	49	9,509	121	3,030	3 2 3
78·76	„ „ 29th „ ...	12,791	6,224	74,067	4,836	47	11,107	141	2,958	3 12 2
78·76	„ „ 6th „ ...	14,336	6,348	63,966	3,990	43	10,381	133	3,385	3 1 1
	Totals up to date ...	252,133	1,24,821	10,49,166	63,019	707	1,88,547	133	56,055	3 5 10

Abstract of progressive weekly returns of all earnings for 1905 in comparison with 1904—concluded. *1904.*

		No. of passengers.	Rs.	Mds.	Rs.	Rs.	Rs.	Rs.	No.	Rate. Rs. A. P.
78·76	First 9 days of Jan. ...	18,523	7,103	84,110	4,402	36	11,831	150	3,290	3 9 6
78·76	Week ended 16th „ ...	11,538	5,312	48,913	3,637	24	8,973	114	3,363	3 13 9
78·76	„ „ 23rd „ ...	13,408	6,359	94,537	4,383	17	11,159	142	2,599	4 4 8
78·76	„ „ 30th „ ...	12,814	6,249	66,728	4,101	33	10,375	132	2,756	3 12 3
78·76	„ „ 6th Feb. ...	12,962	6,538	59,201	4,149	25	10,712	136	2,931	3 10 6
78·76	„ „ 13th „ ...	13,883	6,915	60,522	4,119	24	11,058	140	2,756	4 0 2
78·76	„ „ 20th „ ...	14,482	7,377	1,15,051	3,831	27	11,735	149	2,903	3 14 9
78·76	„ „ 27th „ ...	13,874	7,533	68,466	4,173	44	11,785	149	2,676	4 6 3
78·76	„ „ 6th March ...	13,104	7,338	60,688	4,061	70	11,369	144	2,992	3 13 10
78·76	„ „ 13th „ ...	15,093	7,541	1,57,557	7,126	50	14,717	187	3,250	4 3 11
78·76	„ „ 20th „ ...	14,054	7,050	96,571	5,181	42	12,273	156	3,157	3 14 2
78·76	„ „ 27th „ ...	12,442	6,313	1,03,182	5,776	37	12,116	154	2,435	4 4 5
78·76	„ „ 3rd April ...	11,498	5,853	78,774	5,161	31	10,745	136	2,835	3 12 4
78·76	„ „ 9th „ ...	14,653	5,813	83,589	6,935	33	12,780	162	2,835	4 8 3
78·76	„ „ 10th „ ...	14,898	6,173	87,301	6,990	47	12,310	156	2,914	4 4 2
78·76	„ „ 23rd „ ...	14,472	6,513	69,931	4,284	33	10,829	135	2,677	3 15 6
78·76	„ „ 30th „ ...	15,012	6,754	86,374	5,699	39	12,472	159	3,150	3 15 4
78·76	„ „ 7th May ...	18,469	9,277	61,360	4,581	60	13,918	177	3,700	3 0 0
	Totals up to date ...	249,593	1,22,394	14,64,704	87,879	667	2,10,930	146	51,749	4 1 0

* Audited figures.

EAST INDIAN RAILWAY.

Approximate Return of Traffic for week ended 13th May 1905 on 1,963·25 miles open.

	Coaching Traffic.		Merchandise and Mineral Traffic.		Other earnings (estimated).	Total earnings.	Traffic Train-miles run.		
	No. of passengers.	Coaching Receipts.	Weight carried.	Receipts.			Coaching.	Merchandise.	Total.
		Rs. A. P.	Mds. S.	Rs. A. P. (a)	Rs. A. P.	Rs. A. P.			
Total traffic for the week	418,436	3,83,435 0 0	62,32,461 9	10,62,028 0 0	30,005 0 0	14,76,868 0 0	117,179	180,864	298,043
Or per mile of railway	....	195 6 6	....	541 3 8	15 12 0	752 6 2	....	....	....
For previous 18 weeks of half-year	7,468,065*	*73,79,837 8 0	11,74,01,130 0†	1,94,12,028 0 0‡	5,75,803 0 0‡	2,73,67,756 0 0	2,076,664§	3,223,315§	5,299,979
Total for 19 weeks ...	7,886,461	77,63,272 0 0	12,36,33,591 0	2,04,74,054 0 0	6,06,798 0 0	2,88,44 124 0 0	2,193,843	3,404,179	5,598,022
COMPARISON.									
Total for corresponding week of previous year.	487,107	3,99,753 15 7	69,61,513 20	11,40,770 14 5	37,757 6 7	15,87,381 4 7	111,337	202,750	314,087
Per mile of railway corresponding week of previous year.	.....	206 10 4	.....	594 5 8	19 8 3	820 8 3	.....	.....	.....
Total for corresponding 19½ weeks of previous year.	8,218,844	79,44,710 9 8	13,35,04,857 20	2,02,21,516 4 10	6,05,149 2 0	2,87,71,376 0 3	2,196,391	3,668,945	5,865,336

a) The decrease is in grain and seed traffic.
* Added No. of passengers 3,009 and
† Do. Mds. 1,33,383 and deducted
‡ Deducted
§ Audited figures up to 1st April 1905.

Rs. 9,926 } On account of difference between the approximate and audited figures for the week ended
" 34,060 } 1st April 1905.
" 2,350 }

1905. *Abstract of progressive weekly returns of all earnings for 1905 in comparison with 1904.*

Open mileage.	Period.	Coaching Traffic.		Merchandise and Mineral Traffic.		Other earnings.	Total.	Per mile of Railway.	Train mileage	
		No. of passengers.	Rs.	Mds.	Rs.	Rs.	Rs.	Rs.	No.	Rate. Rs. A. P.
*1,932·87	Week ended 7th Jan. ...	373,540	3,90,680	66,67,706	11,43,388	30,547	15,64,495	809	297,842	5 4 1
*1,932·87	" " 14th " ...	388,514	4,00,134	61,44,640	11,54,861	30,874	15,85,869	820	307,865	5 2 5
*1,932·87	" " 21st " ...	384,101	4,27,893	69,63,443	11,86,526	34,487	16,48,906	857	309,187	5 5 4
*1,932·87	" " 28th " ..	397,668	3,76,383	71,66,889	11,56,573	32,327	15,67,183	811	302,017	5 3 9
*1,932·87	" " 4th Feb. ...	397,461	3,96,672	64,99,831	10,85,994	32,039	15,15,395	784	296,579	5 1 9
*1,932·87	" " 11th " ...	416,257	4,31,252	57,34,068	9,76,582	32,929	14,43,013	746	281,542	5 1 11
*1,932·87	" " 18th " ...	401,777	3,86,209	66,67,714	10,17,406	31,113	14,34,728	743	286,801	5 0 9
*1,932·87	" " 25th " ...	403,547	4,37,133	75,81,370	11,53,060	33,763	16,21,956	839	294,820	5 8 0
*1,940·66	" " 4th Mar. ...	404,334	4,60,897	67,71,735	10,35,843	33,436	15,40,666	795	283,441	5 7 6
*1,962·25	" " 11th " ...	460,989	4,71,986	69,09,797	10,04,143	33,597	15,08,726	769	293,617	5 2 3
*1,962·25	" " 18th " ...	437,637	4,41,117	67,26,139	11,73,574	30,761	16,45,456	839	293,187	5 10 1
*1,962·25	" " 25th " ...	399,793	3,90,360	64,33,977	11,04,846	31,257	15,34,363	778	301,334	5 1 1
*1,962·25	" " 1st April ...	409,494	4,16,671	67,53,763	10,98,393	29,755	15,43,719	787	302,951	5 1 6
1,962·25	" " 8th " ...	394,974	4,19,535	60,39,907	9,64,688	33,015	14,29,238	734	290,106	4 14 4
1,962·25	" " 15th "	413,907	3,75,147	58,65,879	9,34,280	32,272	13,41,699	684	284,238	4 11 6
1,962·25	" " 22nd " ...	417,335	4,04,497	62,71,073	9,70,370	34,196	14,07,063	717	283,110	4 15 6
1,962·25	" " 29th " ...	394,691	3,94,359	67,37,665	11,32,795	33,090	15,39,142	784	288,583	5 5 4
1,962·25	" " 6th May ...	403,716	3,69,243	68,89,093	11,04,167	31,906	15,05,315	767	303,790	4 15 3
1,962·25	" " 13th " ...	418,436	3,83,435	62,32,461	10,62,028	30,905	14,76,368	752	298,043	4 15 3
	Totals up to date ...	7,886,461	77,63,272	12,36,33,591	2,04,74,054	6,06,798	2,88,44,124	779	5,598,022	5 2 5

Abstract of progressive weekly returns of all earnings for 1905 in comparison with 1904 —concluded. *1904.*

		No. of passengers.	Rs.	Mds.	Rs	Rs.	Rs.	Rs	No.	Rate. Rs. A. P.
1,924·49	First 9 days of Jan. ...	461,129	4,58,418	79,11,618	12,76,519	36,634	17,91,411	926	378,922	4 11 9
1,924·49	Week ended 16th " ...	433,462	3,99,314	61,02,205	9,99,600	31,739	14,30,653	740	291,020	4 14 9
1,924·49	" " 23rd " ...	438,165	4,40,888	55,24,628	9,73,799	29,069	14,42,726	746	292,712	4 14 10
1,924·49	" " 30th " ...	409,009	4,21,040	59,70,224	10,03,302	26,379	14,50,721	750	298,668	4 13 6
1,924·49	" " 6th Feb. ...	436,192	4,33,908	66,63,167	10,84,743	29,559	15,48,213	800	305,477	5 1 1
1,924·49	" " 13th " "	426,679	4,15,179	68,55,000	10,06,101	30,487	14,51,767	750	298,483	4 14 3
1,924·49	" " 20th " "	450,236	4,44,971	68,97,325	10,54,190	31,583	15,30,744	791	304,105	5 0 6
1,924·49	" " 27th " "	431,527	4,49,783	66,32,961	10,36,090	29,966	15,14,839	782	305,635	4 15 5
1,924·49	" " 5th Mar. ...	401,443	3,99,464	68,09,979	9,73,971	29,915	14,03,350	725	309,726	4 5 5
1,924·49	" " 12th " ...	448,469	4,53,684	66,27,353	10,19,118	29,081	15,00,883	776	298,302	5 0 6
1,924·49	" " 19th " ...	418,993	4,37,151	58,52,190	10,08,086	28,955	14,74,092	762	305,075	4 13 1
1,924·49	" " 26th " "	397,307	4,08,552	57,18,232	10,04,291	31,106	14,43,949	746	300,653	4 13 1
1,924·49	" " 2nd April	368,885	3,91,224	65,10,666	10,15,981	28,905	14,35,464	742	308,086	4 10 5
1,924·49	" " 9th " ...	394,448	3,84,197	64,20,788	10,40,690	30,561	14,55,448	753	306,988	4 11 10
1,924·49	" " 16th " ...	397,946	3,66,456	67,08,330	11,01,655	28,848	15,05,959	777	310,105	4 13 7
1,924·49	" " 23rd " ...	446,151	4,19,877	68,77,960	11,48,230	28,044	15,97,251	826	305,613	5 4 2
1,924·49	" " 30th " ...	449,736	4,11,079	69,48,016	11,44,984	26,296	15,02,359	823	317,471	5 0 8
1,924·49	" " 7th May ...	501,679	4,16,908	68,94,462	11,93,613	27,265	16,17,186	836	307,510	5 4 8
1,924·49	" " 14th " ...	457,107	3,99,753	69,61,514	11,40,771	37,757	15,87,381	811	314,087	5 0 10
	Totals up to date ...	8,218,844	79,44,711	12,35,04,858	2,02,21,516	6,05,149	2,87,71,376	771	5,455,336	5 14 9

* Audited figures.

TARKESSUR BRANCH RAILWAY.

Approximate Return of Traffic for week ended 13th May 1905 on 22·23 miles open.

	Coaching Traffic.		Merchandise and Mineral Traffic.		Other earnings (estimated).	Total earnings.	Traffic Train-miles run.		
	No. of passengers.	Coaching receipts.	Weight carried.	Receipts.			Coaching.	Merchandise.	Total.
		Rs. A. P.	Mds. s.	Rs. A. P.	Rs. A. P.	Rs. A. P.			
Total traffic for the week	22,911	5,420 0 0	10,723 0	488 0 0	6 0 0	5,914 0 0	963	225	1,188
Per mile of railway	.....	245 13 0	.....	21 15 3	0 4 4	266 0 7	... ...	...	...
For previous 18 weeks of half-year	*469,169	*1,19,445 0 0	†3,62,138 0	14,039 0 0	‡141 0 0	1,33,624 0 0	‡18,218	‡4,060	22,278
Total for 19 weeks ...	492,080	1,24,864 0 0	3,72,861 0	14,527 0 0	147 0 0	1,39,538 0 0	19,181	4,285	23,466
Comparison.									
Total for corresponding week of previous year	23,177	6,090 9 2	34,295 30	930 13 0	4 12 0	7,026 2 2	1,063	125	1,188
Per mile of railway corresponding week of previous year	.....	273 15 8	.....	41 14 0	0 3 5	316 1 1	..	.....	.....
Total for corresponding 19½ weeks of previous year	532,156	1,34,127 6 4	4,56,073 20	16,149 6 0	165 12 3	1,50,442 8 7	20,453	3,131	23,584

* Deducted No. of passengers 871 and Rs. 117 } on account of difference between the approximate and audited figures for the week ended
† Added Mds. 3,153 ,, ,, 46 } 1st April 1905.
‡ Audited figures up to 1st April 1905.

1905 — *Abstract of progressive weekly returns of all earnings for 1905 in comparison with 1904*

Open mileage.	Period.	Coaching Traffic.		Merchandise and Mineral Traffic.		Other earnings.	Total.	Per mile of railway.	Train mileage.	
		No. of passengers.	Rs.	Mds.	Rs.	Rs.	Rs.	Rs.	No.	Rate. Rs. A. P.
*22·23	Week ended 7th Jan.	20,210	4,786	21,896	805	6	5,597	253	1,188	4 15 5
*22·23	,, ,, 14th ,, ...	21,803	4 931	18,783	902	4	5,837	249	1,188	4 10 7
*22·23	,, ,, 21st ,, ...	22,881	5,298	13,096	544	6	6,138	278	1,188	5 2 8
*22·23	,, ,, 28th ,, ..	21,754	4,994	19,716	726	7	5,727	258	1,188	4 14 7
*22·23	,, ,, 4th Feb. ...	20,042	4 684	15,612	551	11	5,251	238	1,188	4 6 9
*22·23	,, ,, 11th ,, ..	21,317	5,152	20,771	857	11	6,000	270	1,188	5 0 10
*22·23	,, ,, 18th ,, ...	19,037	4,820	18,240	633	6	5,459	246	1,189	4 9 6
*22·23	,, ,, 25th ,, ...	20,104	6,3 5	30,704	1,039	6	7,430	334	1,188	6 4 1
*22 23	,, ,, 4th Mar. ...	37,973	10,644	30,530	1,208	15	11,868	534	1,348	8 13 6
*22·23	,, ,, 11th ,, ...	30,174	7 718	19,378	779	7	8,504	383	1,427	5 15 4
*22·23	,, ,, 18th ,, ...	23,841	6,029	20,150	868	7	6,904	312	1,196	5 13 5
*22·23	,, ,, 25th ,, ..	25,683	6,304	16,229	619	7	6,934	312	1,196	5 13 7
*22·23	,, ,, 1st April ...	24,302	5,901	20,505	770	8	6,679	300	1,230	5 6 10
22·23	,, ,, 8th ,, ...	33,857	9,161	16,050	913	8	10,081	454	1,188	8 7 6
22·23	,, ,, 15th ,, .	30,234	14,536	12,639	562	9	15,097	734	1,672	9 10 8
22·23	,, ,, 22nd ,, ...	23,539	5,943	18,483	730	8	6,681	301	1,188	5 10 0
22·23	,, ,, 29th ,, ...	22,566	5,574	15,508	731	7	6,303	283	1,189	5 4 10
22·23	,, ,, 6th May ...	22,247	5,619	23,857	812	8	6,439	290	1,188	5 6 8
22·23	,, ,, 13th ,, ...	22,911	5,420	10,723	488	6	5,914	266	1,188	4 15 8
	Totals up to date ...	492,080	1,24,864	3,72,871	14,527	147	1,39,538	330	23,466	5 15 2

Abstract of progressive weekly returns of all earnings for 1905 in comparison with 1904—concluded. *1904.*

		No. of passengers.	Rs.	Mds.	Rs.	Rs.	Rs.	Rs.	No.	Rate. Rs. A. P.
22·23	First 9 days of Jan. ...	25,125	6,268	23,280	1,003	14	7,285	326	1,540	4 11 9
22·23	Week ended 16th ,, ...	19,706	4,463	17,986	583	9	5,074	228	1,188	4 4 4
22·23	,, ,, 23rd ,, ...	21,894	5,339	18,703	702	8	6,039	267	1,188	5 0 8
22·23	,, ,, 30th ,, ...	24,189	5,884	23,323	788	1	6,613	297	1,189	5 9 1
22·23	,, ,, 6th Feb. ...	24,933	7,088	25,796	794	3	7,879	354	1,188	6 10 1
22·23	,, ,, 13th ,, ...	25,690	6,151	20,371	620	6	6,816	306	1,232	5 8 6
22·23	,, ,, 20th ,, ...	39,816	10,661	22,301	732	4	11,397	513	1,406	7 9 11
22·23	,, ,, 27th ,, ...	25,592	6,146	24,750	806	10	7,002	317	1,188	5 13 0
22 23	,, ,, 6th Mar. ...	25,909	6,721	18,187	684	6	7,411	333	1,188	6 3 10
22·23	,, ,, 13th ,, ...	24,231	5,986	27,319	943	7	6,936	312	1,189	5 13 8
22 23	,, ,, 19th ,, ...	23,432	6,283	20,690	1,093	11	7,387	330	1,186	6 2 9
22·23	,, ,, 20th ,, ...	22,166	5,490	19,643	774	15	6,279	282	1,188	5 4 7
22·23	,, ,, 2nd April ...	21,504	6,336	26,684	1,078	9	7,423	334	1,144	6 7 10
22·23	,, ,, 9th ,, ...	39,679	11,751	30,244	1,133	10	12,894	580	1,338	10 7 4
22·23	,, ,, 16th ,, ...	46,289	14,351	31,514	747	16	15,124	680	1,496	10 1 9
22·23	,, ,, 23rd ,, ...	24,107	6,023	22,097	836	13	6,871	309	1,188	5 12 6
22·23	,, ,, 30th ,, ...	26,740	6,785	24,499	963	4	7,753	349	1,188	6 8 5
22·23	,, ,, 7th May ...	25,960	6,408	23,962	833	16	7,315	329	1,188	6 2 6
22·23	,, ,, 14th ,, ...	33,177	6,091	34,296	930	5	7,026	316	1,188	5 14 5
	Totals up to date ...	532,156	1,34,127	4,56,073	16,149	166	1,50,442	351	23,584	6 6 1

* Audited figures.

DELHI-UMBALLA-KALKA RAILWAY.

Approximate Return of Traffic for week ended 13th May 1905 on 162·36 miles open.

	Coaching Traffic.		Merchandise and Mineral Traffic.		Other earnings (estimated).	Total earnings.	Traffic Train-miles run.		
	No. of passengers.	Coaching receipts.	Weight carried.	Receipts.			Coaching.	Merchandise.	Total.
		Rs. A. P.	Mds. s.	Rs. A. P.	Rs. A. P.	Rs. A. P.			
Total traffic for the week	23,996	18,603 0 0	1,67,331 0	13,853 0 0	75 0 0	32,529 0 0	8,923	3,995	12,918
Or per mile of railway ..	.....	114 9 3	.....	85 15 2	0 7 2	200 5 7	...	...	.....
For previous 18 weeks of half-year	457,193*	3,72,731 0 0*	34,98,676 0†	2,77,329 0 0†	1,019 0 0‡	6,51,079 0 0	164,138§	71,268§	235,403
Total for 19 weeks ...	459,389	3,91,334 0 0	36,66,007 0	2,91,182 0 0	1,092 0 0	6,84,208 0 0	173,056	75,263	248,321
COMPARISON.									
Total for corresponding week of previous year.	25,619	21,097 3 4	1,10,319 30	11,606 6 0	51 15 9	33,755 9 1	9,015	3,598	12,553
Per mile of railway corresponding week of previous year.	.....	129 15 0	.....	71 7 9	0 5 2	201 11 11	.....	.....	.....
Total for corresponding 19½ weeks of previous year.	496,534	4,17,307 13 5	24,88,761 10	2,45,798 0 6	1,171 9 3	6,64,277 7 2	189,682	70,579	260,261

* Deducted No. of passengers 807 and Rs. 1,229 } On account of difference between the approximate and audited figures for the week ended 1st
† Added Mds. 2,78,396 ,, ,, 5,918 } April 1905.
‡ Deducted ,, ,, 22
§ Audited figures up to 1st April 1905.

1905. *Abstract of progressive weekly returns of all earnings for 1905 in comparison with 1904.*

Open mileage.	Period.	Coaching Traffic.		Merchandise and Mineral Traffic.		Other earnings.	Total.	Per mile of railway.	Train mileage.	
		No. of passengers.	Rs.	Mds.	Rs.	Rs.	Rs.	Rs.	No.	Rate. Rs. A. P.
*162·36	Week ended 7th Jan. ...	21,303	18,631	2,37,619	11,933	91	30,655	189	12,992	2 5 9
*162·36	,, ,, 14th ,, ...	21,276	18,385	1,18,335	13,506	107	32,478	200	13,098	2 7 9
*162·36	,, ,, 21st ,, ...	20,051	15,772	1,33,269	13,543	108	29,423	181	13,513	2 2 10
*162·36	,, ,, 28th ,, ...	22,039	17,068	1,66,407	17,714	115	34,897	215	13,263	2 10 1
*162·36	,, ,, 4th Feb. ...	21,462	18,956	1,07,182	11,213	79	30,878	168	12,731	2 3 3
*162·36	,, ,, 11th ,, ...	21,231	17,449	2,74,373	17,541	114	35,104	216	12,820	2 11 10
*162·36	,, ,, 18th ,, ...	23,536	16,263	1,37,615	16,671	119	33,053	204	13,241	2 7 11
*162·36	,, ,, 25th ,, ...	26,876	20,440	2,20,389	22,124	114	42,678	263	13,716	3 0 6
*162·36	,, ,, 4th Mar. ...	26,866	19,781	2,33,441	15,119	58	34,958	215	13,996	2 11 9
*162·36	,, ,, 11th ,, ...	27,230	24,455	1,97,631	18,120	61	39,039	244	13,117	2 9 4
*162·36	,, ,, 18th ,, ...	25,093	24,535	1,97,036	17,477	75	42,077	259	13,581	3 0 6
*162·36	,, ,, 25th ,, ...	24,,92	22,433	2,05,014	16,651	85	39,171	241	13,730	2 13 8
*162·36	,, ,, 1st April ...	20,582	22,230	4,02,274	20,330	76	42,636	326	14,717	3 0 11
162·36	,, ,, 8th ,, ...	20,346	27,651	1,20,720	15,473	97	43,201	266	13,605	3 3 10
162·36	,, ,, 15th ,, ...	25,084	25,498	1,50,006	12,376	92	38,404	234	13,943	2 13 9
162·36	,, ,, 22nd ,, ...	24,680	21,724	1,17,863	13,763	86	35,573	219	13,233	2 14 6
162·36	,, ,, 29th ,, ...	22,540	19,719	1,79,031	13,009	75	32,803	200	13,259	2 10 4
162·36	,, ,, 6th May ...	22,672	19,319	1,36,376	13,674	67	33,060	204	13,886	2 9 0
162·36	,, ,, 13th ,, ...	23,696	18,603	1,67,331	13,853	73	32,529	200	13,918	2 8 5
	Totals up to date ...	459,389	3,91,334	36,66,007	2,91,182	1,092	6,84,208	212	248,321	2 12 1

Abstract of progressive weekly returns of all earnings for 1905 in comparison with 1904—concluded. 1904

		No. of passengers.	Rs.	Mds.	Rs.	Rs.	Rs.	Rs.	No.	Rate. Rs. A. P.
162·36	First 9 days of Jan. ...	24,345	23,472	1,04,228	13,543	53	36,078	216	16,546	2 1 11
162·36	Week ended 16th ,, ...	18,106	13,980	97,997	12,607	31	26,708	165	13,709	2 1 6
162·36	,, ,, 23rd ,, ...	18,210	14,767	1,03,833	11,457	44	26,238	162	13,924	2 0 6
162·36	,, ,, 30th ,, ...	20,112	15,196	2,05,450	15,841	29	34,066	210	13,069	2 9 9
162·36	,, ,, 6th Feb. ...	20,613	15,244	1,33,164	13,603	31	27,880	172	12,038	2 6 1
162·36	,, ,, 13th ,, ...	20,810	17,050	1,01,117	13,811	59	30,920	184	13,346	2 3 10
162·36	,, ,, 20th ,, ...	21,856	19,060	1,40,693	13,216	61	32,338	193	13,747	2 7 4
162·36	,, ,, 27th ,, ...	22,343	19,867	1,38,906	15,005	43	34,915	214	12,868	2 11 8
162·36	,, ,, 5th Mar. ...	23,770	20,353	1,25,894	10,984	81	31,337	193	13,180	2 6 1
162·36	,, ,, 12th ,, ...	23,852	23,160	90,548	10,402	54	33,625	207	14,439	2 5 3
162·36	,, ,, 19th ,, ...	76,887	45,411	47,089	11,913	133	57,455	354	17,390	3 4 10
162·36	,, ,, 26th ,, ...	35,077	27,534	1,36,950	15,267	101	42,882	264	13,143	3 13 4
162·36	,, ,, 2nd April ...	23,736	26,982	1,71,633	17,010	76	43,994	270	13,743	3 3 1
162·36	,, ,, 9th ,, ...	24,112	25,150	1,01,971	13,556	77	37,815	233	13,889	2 11 6
162·36	,, ,, 16th ,, ...	20,630	22,479	90,833	13,651	60	36,190	216	13,403	2 9 8
162·36	,, ,, 23rd ,, ...	23,174	21,732	1,17,968	13,826	56	35,636	220	13,418	2 10 6
162·36	,, ,, 30th ,, ...	22,302	21,840	1,29,625	13,355	73	35,276	217	13,719	2 9 3
162·36	,, ,, 7th May ...	23,226	21,366	1,20,413	11,100	57	32,533	200	13,904	2 7 11
162·36	,, ,, 14th ,, ...	25,619	21,097	1,10,319	11,606	53	33,755	202	13,553	2 9 9
	Totals up to date ...	496,534	4,17,307	24,88,761	2,45,798	1,172	6,64,277	212	260,261	2 8 10

* Audited figures.

SOUTH BEHAR RAILWAY.

Approximate Return of Traffic for week ended 13th May 1905 on 78·76 miles open.

	Coaching Traffic.		Merchandise and Mineral Traffic.		Other earnings (estimated).	Total earnings.	Traffic train-miles run.		
	Number of passengers.	Coaching receipts.	Weight carried.	Receipts.			Coaching.	Merchandise.	Total
		Rs. A. P.	Mds. s.	Rs. A. P.	Rs. A. P.	Rs. A. P.			
ual traffic for the week	14,081	6,512 0 0	48,079 0	3,337 0 0	43 0 0	9,891 0 0	1,928	1,378	3,306
er per mile of railway		82 10 11	....	42 5 11	0 8 6	125 9 4	.....	.....	.....
or previous 18 weeks of half-year	*253,388	*1,25,612 0 0	†10,50,190 0	†62,999 0 0	‡718 0 0	1,89,329 0 0	§30,648	§25,038	55,676
Total for 19 weeks ...	268,069	1,32,124 0 0	10,98,269 0	66,336 0 0	760 0 0	1,99,220 0 0	•32,576	27,306	59,882
COMPARISON.									
tal for corresponding week of previous year.	15,556	6,870 11 6	54,647 20	4,516 1 0	33 13 9	11,426 10 3	1,580	1,097	2,677
er mile of railway correspond-ing week of previous year.	.....	87 5 8	.....	57 5 5	0 6 8	145 1 9	.....	.....	.....
otal for corresponding 19½ weeks of previous year.	275,140	1,29,273 14 4	15,19,351 10	92,395 10 0	689 2 6	2,22,358 10 10	31,339	23,037	54,426

* Added No. of passengers 1,256 and Rs. 701
† Do. Mds. 1,021 and deducted „ 30
‡ Added „ 11
§ Audited figures up to 1st April 1905.

} On account of difference between the approximate and audited figures for the week ended 1st April 1905.

1905. *Abstract of progressive weekly returns of all earnings for 1905 in comparison with 1904.*

Open mileage.	Period.	Coaching Traffic.		Merchandise and Mineral Traffic.		Other earnings.	Total.	Per mile of railway.	Train mileage.	
		No. of Passengers.	Rs.	Mds.	Rs.	Rs.	Rs.	Rs.	No.	Rate. Rs. A. P.
*78·76	Week ended 7th Jan. ...	14,187	6,096	55,900	2,640	24	8,659	113	3,471	2 12 6
*78·76	„ „ 14th „ ...	12,404	5,946	53,919	3,823	33	9,802	124	3,506	2 15 5
*78·76	„ „ 21st „ ...	12,226	6,182	38,437	2,850	23	8,995	114	3,506	2 11 6
*78·76	„ „ 28th „ ...	12,209	6,080	56,807	2,835	23	8,940	114	3,327	2 12 4
*78·76	„ „ 4th Feb. ...	13,442	6,170	49,046	3,862	35	10,067	128	3,415	2 15 2
*78·76	„ „ 11th „ ...	13,709	6,493	61,854	3,007	33	9,533	121	3,768	2 8 6
*78·76	„ „ 18th „ ...	15,633	8,440	56,654	3,301	30	11,800	150	3,287	3 9 5
*78·76	„ „ 25th „ ...	10,010	8,497	58,934	3,339	50	12,016	153	3,099	3 14 0
*78·76	„ „ 4th March ...	17,071	8,424	61,076	3,359	49	11,832	150	3,304	3 5 11
*78·76	„ „ 11th „ ...	15,872	7,319	52,108	3,398	53	10,715	136	3,149	3 6 5
*78·76	„ „ 18th „ ...	13,687	7,181	44,127	3,126	41	10,348	135	2,587	3 10 9
*78·76	„ „ 25th „ ...	15,214	8,009	61,360	4,355	33	12,374	157	2,989	4 2 3
*78·76	„ „ 1st April ...	16,196	8,103	56,389	3,619	45	11,669	148	3 277	3 9 0
78·76	„ „ 8th „ ...	13,100	6,821	60,751	3,414	41	9,976	127	2,794	3 9 2
78·76	„ „ 15th „ ...	14,883	6,040	64,680	3,345	44	10,344	131	3,030	3 6 7
78·76	„ „ 22nd „ ...	12,293	5,702	63,665	3,737	40	9,508	121	3,010	3 3 2
78·76	„ „ 29th „ ...	12,791	6,234	78,007	4,636	47	11,107	141	2,962	3 13 3
78·76	„ „ 6th May ...	14,726	6,344	62,964	3,993	43	10,361	131	3,385	3 1 1
78·76	„ „ 13th „ ...	14,081	6,512	48,079	3,337	43	9,891	126	3,306	3 15 10
	Totals up to date ...	268,069	1,32,124	10,98,269	66,336	760	1,99,220	133	59,882	3 5 3

Abstract of progressive weekly returns of all earnings for 1905 in comparison with 1904—concluded. *1904*

		No. of Passengers.	Rs.	Mds.	Rs.	Rs.	Rs.	Rs.	No.	Rate. Rs. A. P.
78·76	First 9 days of Jan. ...	15,583	7,103	89,119	4,609	36	11,841	150	3,230	3 9 6
78·76	Week ended 16th „ ...	11,336	5,319	44,913	3,037	24	8,379	114	3,363	2 12 9
78·76	„ „ 23rd „ ...	13,408	6,959	94,037	4,283	17	11,159	143	2,579	4 4 8
78·76	„ „ 30th „ ...	12,614	6,249	88,739	4,101	24	10,374	132	2,756	3 12 3
78·76	„ „ 6th Feb. ...	12,662	6,538	59,201	4,149	25	10,712	136	2,911	3 10 4
78·76	„ „ 13th „ ...	13 863	6,915	60,328	4,119	24	11,058	140	2,756	4 0 9
78·76	„ „ 20th „ ...	14,432	7,677	1,15,051	3,831	27	11,735	149	2,993	3 16 9
78·76	„ „ 27th „ ...	13,874	7,538	65,466	4,173	44	11,755	149	2,678	4 6 8
78·76	„ „ 5th March ...	13,104	7,239	60,683	4,061	70	11,369	144	2,998	3 13 10
78·76	„ „ 12th „ ...	15,065	7,541	1,57,337	7,136	30	14,717	187	3,230	4 8 12
78·76	„ „ 19th „ ...	14,084	7,080	94,571	5,180	43	12,273	156	3,157	3 14 2
78·76	„ „ 26th „ ...	12,448	6,815	1,03,189	5,776	27	12,116	154	2,835	4 4 5
78·76	„ „ 2nd April ...	11,482	6,353	73,774	5,161	31	10,745	136	2,835	3 12 8
78·76	„ „ 9th „ ...	12,563	5,612	85,899	6,935	53	12,780	162	2,935	4 8 2
78·76	„ „ 16th „ ...	14,609	6,173	87,502	6,090	47	12,310	156	2,914	4 4 2
78·76	„ „ 23rd „ ...	14,478	6,[illegible]	69,931	4,284	34	10,6-9	135	2,677	3 15 6
78·76	„ „ 30th „ ...	15 012	[illegible]	80,374	5,490	30	13,471	186	3,160	3 15 4
78·76	„ „ 7th May ...	13,569	[illegible]	63,300	4 541	60	13,018	177	2,760	3 0 8
78·76	„ „ 14th „ ...	15,556	6,880	54,647	4,516	33	11,429	145	2,677	4 4 4
	Totals up to date	265,140	1,29,274	15,19,351	92,395	690	2,22,359	146	54,426	4 1 4

* Audited figures.

EASTERN BENGAL STATE RAILWAY SYSTEM.

(INCLUDING B.-S. B., R. M. B. AND R.-K. L. RAILWAYS.)

Approximate Return of Traffic and Mileage for the week ended 20th May 1905 on (a) 1,061 miles open.

	Coaching Traffic.		Merchandise and Mineral Traffic.		Other earnings (including steam-boat.)	Total earnings.	Traffic Train-miles run		
	No. of passengers	Coaching receipts.	Weight carried.	Receipts.			Coaching.	Merchandise.	Total.
		Rs. A. P.	Mds. s.	Rs. A. P.	Rs. A. P.	Rs. A. P.			
Total traffic for the week ...	277,140	1,26,387 0 0	9,04,860 0	1,16,750 0 0	7,093 0 0	2,48,810 0 0	46,045	30,577	76 622
Or per mile of railway	261	119 0 0	853 0	108 0 0	1 0 0*	228 0 0*	...	..	..
For previous 19 weeks of half-year†	5,402,209	26,30,325 0 0	2,15,48,082 0	26,33,573 0 0	3,56,333 0 0	56,18 229 0 0	860,987	649,808	1,510,795
Total for 20 weeks ...	5,679,349	27,56,703 0 0	2,24,53,842 0	27,48,323 0 0	3,63,018 0 0	58 67,039 0 0	907,002	680,385	1,587,387
COMPARISON									
Total for corresponding week of previous year ...	260,635	1,24,642 0 0	10,18,841 0	1,20,812 0 0	9,972 0 0	2,57,126 0 0	43 487	37,033	79,520
Per mile of railway corresponding week of previous year (967 miles)	272	133 0 0	1,063 0	126 0 0	2 0 0	268 0 0	...	...	...
Total to corresponding date of previous year	5,468 339	27,16,573 0 0	2,54,55 892 0	32,86,033 0 0	4,23,683 0 0	64,26,349 0 0	832,194	820,654	1,652,848

* Excluding ferry earnings, Rs 6,896
† Audited up to week ending 1st April 1905.
(a) Increase in mileage is due to the further opening of Ranaghat-Murshidabad Branch up to Bhagwangola on 15th May 1905

DACCA STATE RAILWAY.

Approximate Return of Traffic and Mileage for the week ended 20th May 1905 on 86 miles open.

	Coaching Traffic.		Merchandise and Mineral Traffic.		Other earnings.	Total earnings.	Traffic Train-miles run.		
	No. of passengers.	Coaching receipts.	Weight carried.	Receipts.			Coaching.	Merchandise.	Total
		Rs A P.	Mds. s.	Rs. A. P	Rs. A. P.	Rs A. P.			
Total traffic for the week	25,019	7,250 0 0	22,050 0	2,120 0 0	150 0 0	9,520 0 0	3,160	1,290	4,440
Or per mile of railway	291	84 0 0	256 0	25 0 0	2 0 0	111 0 0			
For previous 19 weeks of half-year*	559,118	1,64 626 0 0	6,14,439 0	48,598 0 0	4,378 0 0	2,17,596 0 0	57,437	23,517	80,954
Total for 20 weeks ...	584,138	1,71,[illegible] 0 0	6,36,489 0	50,718 0 0*	4,528 0 0	2,27,116 0 0	60,597	24,797	85,394
COMPARISON									
Total for corresponding week of previous year ...	26,840	7,563 0 0	13,741 0	2,151 0 0	52 0 0	9,768 0 0	3,627	1,321	4 948
Per mile of railway corresponding week of previous year ...	312	88 0 0	218 0	25 0 0	1 0 0	114 0 0		..	...
Total to corresponding date of previous year ...	611,550	1,79,080 0 0	9,01,151 0	84 382 0 0	4,935 0 0	2,48,397 0 0	58,868	36,049	94 917

* Audited up to week ending 1st April 1905.

COOCH BEHAR STATE RAILWAY

Approximate Return of Traffic and Mileage for the week ended 20th May 1905 on 33·6 miles open

	Coaching Traffic.		Merchandise and Mineral Traffic.		Other earnings (including ferry).	Total earnings.	Traffic Train-miles run.		
	No. of passengers.	Coaching receipts.	Weight carried.	Receipts.			Coaching.	Merchandise.	Total
		Rs. A. P.	Mds. s.	Rs. A. P.	Rs. A. P.	Rs. A. P.			
Total traffic for the week ...	3,050	1,640 0 0	9,820 0	890 0 0	20 0 0	2,550 0 0	550	(a) 670	1,070
Or per mile of railway ...	91	49 0 0	292 0	26 0 0	1 0 0	76 0 0			
For previous 19 weeks of half-year*	61,228	25,724 0 0	9,13,493 0	30,394 0 0	210 0 0	56,328 0 0	8,591	31,159	39,750
Total for 20 weeks ...	64,278	27,364 0 0	9,23,313 0	31,284 0 0	230 0 0	58,878 0 0	9,141	31,829	40 770
COMPARISON.									
Total for corresponding week of previous year ...	3,653	1,118 0 0	13,645 0	1,143 0 0	4 0 0	2,267 0 0	427	2,189	2 616
Per mile of railway corresponding week of previous year ...	91	33 0 0	406 0	34 0 0	...	67 0 0	...	...	...
Total to corresponding date of previous year	64,560	25,039 0 0	1,298,413 0	38,910 0 0	285 0 0	63,325 0 0	9 249	33,137	42,386

(a) Ballast train-miles 100.
* Audited up to week ending 1st April 1905.

MYMENSINGH-JAGANNATHGANJ RAILWAY.

Approximate Return of Traffic and Mileage for the week ended 20th May 1905 on 51·37 miles open.

	Coaching Traffic.		Merchandise and Mineral Traffic.		Other earnings (including ferry).	Total earnings.	Traffic Train-miles run.		
	No. of passengers.	Coaching receipts.	Weight carried.	Receipts.			Coaching.	Merchandise	Total.
		Rs. A. P.	Mds. s.	Rs. A. P.	Rs. A. P.	Rs. A. P.			
Total traffic for the week ...	7,850	2,450 0 0	7,290 0	510 0 0	...	2,960 0 0	1,302	226	1,428
Or per mile of railway ...	147	46 0 8	142 0	10 0 0	...	58 0 0	...	...	—
For previous 19 weeks of half-year*	164,231	48,712 0 0	2,86,905 0	14,314 0 0	278 0 0	63,304 0 0	20,337	6,873	27,210
Total for 20 weeks ...	171,781	51,162 0 0	2,94,195 0	14,824 0 0	278 0 0	66,264 0 0	21,639	7,099	28,638
Comparison.									
Total for corresponding week of previous year	8,159	2,464 0 0	11,383 0	582 0 0	4 0 0	3,050 0 0	1,165	263	1,428
Per mile of railway corresponding week of previous year ...	155	47 0 0	215 0	11 0 0	...	58 0 0	...	...	...
Total to corresponding date of previous year	214,612	61,182 0 0	3,85,719 0	20,813 0 0	492 0 0	82,437 0 0	21,963	11,100	33,063

* Audited up to week ending 1st April 1905.

BENGAL CENTRAL RAILWAY COMPANY, LIMITED.

Approximate Return of Traffic and Mileage for the week ended 13th May 1905 on 139 miles open

	Coaching Traffic.		Merchandise and Mineral Traffic.		Other earnings.	Total earnings.	Traffic Train-miles run.		
	Number of passengers.	Coaching receipts.	Weight carried.	Receipts.			Coaching.	Merchandise.	Total.
		Rs. A. P.	Mds. s.	Rs. A. P.	Rs. A. P.	Rs. A. P.			
Total traffic for the week ...	35,491	14,623 0 0	77,089 0	6,086 0 0	199 0 0	20,908 0 0	4,074	3,306	7,380
Or per mile of railway	275	113 0 0†	595 0	44 0 0	1 0 0	157 0 0	.....	...	.....
For previous 18 weeks of half-year*	735,964	2,88,518 0 0	13,57,619 0	1,05,190 0 0	64 013 0 0	4,57,750 0 0	83,142	51,584	134,726
Total for 19 weeks ...	771,455	3,03,141 0 0	14,34,708 0	1,11,276 0 0	64,341 0 0	4,78,658 0 0	87,216	54,890	142,106
Comparison.									
Total for corresponding week of previous year ...	33,097	13,356 0 0†	66,178 0	5,139 0 0	87 0 0	18,582 0 0	4,967	2,217	7,204
Per mile of railway corresponding week of previous year	256	103 0 0†	490 0	37 0 0	1 0 0	141 0 0	.....	.....	.....
Total to corresponding date of previous year	774,664	3,03,787 0 0	15,43,196 0	1,31,791 0 0	50,866 0 0	4,86,444 0 0	93,117	49 495	142,612

* Audited up to week ended 25th March 1905.
† Coaching traffic calculated on 130 miles only.

BENGAL AND NORTH-WESTERN RAILWAY.

Approximate Return of Traffic for the week ending 13th May 1905 on 1,467 miles open.

	Coaching Traffic.		Merchandise and Mineral Traffic		Other earnings (estimated), including steam-boat.	Total earnings.	Traffic Train-miles run.		
	Number of passengers.	Receipts.	Weight carried.	Receipts.			Coaching.	Merchandise.	Total.
		Rs.	Mds.	Rs	Rs.	Rs			
Total traffic for the week on 1,467 miles open	272,800	(a)1,14,080	11,94,080	(b)1,43,680	(c)21,360	2,79,120	41,781	(d)42,713	84,499
Or per mile of railway	186 03	77 77	706·25	97 94	14·56	190·37	.....	....	..
For previous 18 weeks of half-year (e)	4,461,156	18,38,896	1,87,94,877	23,02,445	3,79,121	46,10,462	764,347	772,177	1,536,494
Total for 19 weeks ...	4,734,056	[illegible],53,976	1,99,18,957	25,36,125	4,00,481	48,89,582	806,028	814,890	1,620,918
Comparison.									
Total for corresponding week of previous year on 1,388 miles open	304 506	1,40,623	11,34,743	1,71,973	30,263	3,42,858	42,461	(f)45,195	87,656
Per mile of railway corresponding week of previous year ...	282 86	101·32	8·0·33	123·90	21·80	247 03	...	...	...
Total to corresponding date of previous year	4 672,891	21,04,847	1,97,83,037	26,11,490	4,43,783	51,58,160	776,408	762,926	1,539,334

(a) Decrease mainly under foreign outward due to special trains run for the Tibet mission in the corresponding period last year.
(b) The traffic of the week showed a large decrease in foreign outward bookings, due to dull markets and bad crops, but this was partly compensated for by increased local movements and foreign inward traffic.
(c) Decrease chiefly under steam-boats due to reduced foreign outward traffic referred to above.
(d) Includes 5,715 miles of ballast trains.
(e) Ditto audited figures up to week ending 1st April 1905.
(f) Ditto 5,3.9 miles of ballast trains.

ASSAM-BENGAL RAILWAY.

Approximate Return of traffic for the week ended 13th May 1905 on 737 miles open for all descriptions of traffic, and an additional 3 miles for goods traffic only.

	Coaching Traffic.		Merchandise and Mineral Traffic.		Other earnings (estimated), including steam boat.	Total earnings.	Traffic Train-miles run.		
	No. of passengers.	Coaching receipts.	Weight carried.	Receipts.			Coaching.	Merchandise.	Total.
		Rs. A. P.	Mds. s.	Rs. A. P.	Rs. A. P.	Rs. A. P.			
Total traffic for the week ...	41,238	25,347 0 0	1,49,919 0	18,506 0 0	1,789 0 0	46,002 0 0	10,740	12,582	23,322
Or per mile of railway	55·93	34·39	203·59	25·49	2·43	62·30	14·57	17 03	31·59
For previous 18 weeks of half-year	869,757	5,82,466 0 0	28,33,116 0	4,31,557 0 0	43,037 0 0	10,70,060 0 0	189,925	270,052	459,977
Total for 19 weeks ...	910,990	6 07,813 0 0	29,83,035 0	4,50,423 0 0	44,826 0 0	11,16,062 0 0	200,665	282,644	483,309
Comparison.									
Total for corresponding week of previous year	38,851	21,186 0 0	1,04,713 0	13,013 0 0	1,365 0 0	36,099 0 0	7,330	7,474	14,704
Per mile of railway correspond. ing week of previous year ..	53·73	29·75	141·50	17 63	2·52	48·90	9 81	10·10	19 91
Total to corresponding date of previous year	847,821	5,45,303 0 0	24,86,893 0	3,62,059 0 0	49,974 0 0	9,77,346 0 0	167,513	203·822	371,335

FINANCIAL YEAR.

Approximate Statement of Gross Receipts of the Assam-Bengal Railway.

Receipts for week ending 13th May 1905.			Receipts for week ending 14th May 1904.			Total receipts from 1st April 1905 to 13th May 1905.			Total receipts from 1st April 1904 to 14th May 1904			Total increase in 1905.	Total decrease in 1905
Mean mileage worked.	Receipts.	Per mile worked.	Mean mileage worked.	Receipts.	Per mile worked.	Mean mileage worked.	Total receipts.	Per mile worked per week.	Mean mileage worked	Total receipts.	Per mile worked per week.		
	Rs.	Rs.		Rs.	Rs.		Rs.			Rs.		Rs.	
740	46,002	62·30	740	36,099	48·90	740	3,35,354	...	740	2,53,645	...	81,709	... ...

DARJEELING-HIMALAYAN RAILWAY COMPANY, LIMITED

			Rs.	A.	P.	Rs	A.	P.
Approximate earnings for the week ending 20th May 1905	...	Coaching ...	10,547	0	0			
		Goods ...	14,733	0	0	25,316	0	0
		Other earnings ...	36	0	0			
Audited earnings for the corresponding period of 1904	...	Coaching ...	10,057	0	0			
		Goods ...	15,041	0	0	25,210	0	0
		Other earnings ...	112	0	0			
		Increase ...				106	0	0
Receipts per mile for the week ending 20th May 1905	...	... ...				496	6	3
Ditto for the corresponding period of 1904	...	... ...				494	5	0
		Increase ...				2	1	3
Receipts from 1st January to 20th May 1905	...	... ...				3,39,666	0	0
Ditto for the corresponding period of 1904	...	... ...				3,88 076	0	0
		Decrease ...				48,410	0	0

Printed at the Printing Office, and published by the Book Depôt, of the Bengal Secretariat, Writers' Buildings, in the City of Calcutta, on 31st May 1905.

REGISTERED No. C209.]

No. 23 of 1905.

The Calcutta Gazette.

WEDNESDAY, JUNE 7, 1905.

CONTENTS.

	Page
PART I.—Orders and Notifications by the Lieutenant-Governor of Bengal, the High Court, Government Treasury, etc.	1007—1076
PART IA.—Orders and Notifications by the Government of India	105—106
PART IB.—Orders by the Lieutenant-Governor of Bengal	87—90
PART II.—Advertisements	697—719
PART III.—Acts of the Bengal Council	Nil
PART IV.—Bills of the Bengal Council	Nil
PART IVA.—Proceedings of the Bengal Legislative Council	Nil
PART V.—Acts of the Governor-General's Council assented to by the Governor-General	Nil
PART VI.—Bills introduced into the Council of the Governor-General for making Laws and Regulations or published under Rule 23	Nil
APPENDIX.—Marine Notifications	179—185
SUPPLEMENT No. 33:—	
Resolution recorded on the Annual Returns of the Lunatic Asylums in Bengal for the year 1904	845—846
Statistical Return of Crops, Irrigation Operation, Circular and Eastern Canals, Results of Meteorological Observations, Railway Traffic Receipts, &c., &c.	847—863

PART I.

Orders and Notifications by the Lieutenant-Governor of Bengal, the High Court, Government Treasury, &c.

ORDERS BY THE LIEUT.-GOVERNOR OF BENGAL.

No. 2914A.

APPOINTMENTS AND TRANSFERS.

GENERAL.—*No. 1953A.D.—The 31st May 1905.*—Rai Narayan Chunder Naik Bahadur, Deputy Magistrate and Deputy Collector, is posted to the head-quarters station of the Jessore district, on being relieved of his Settlement duties in Angul.

Angul.
Jessore.

No. 1307A.D.—The 1st June 1905.—Maulvi Afzalur Rahaman, Deputy Magistrate and Deputy Collector, Madaripur, Faridpur, is appointed to have charge of that subdivision, during the absence, on leave, of Babu Giris Chandra Dutta, or until further orders.

Faridpur.

No. 1334A.D.—The 3rd June 1905.—Babu Nund Kishore Lal, Deputy Magistrate and Deputy Collector, on leave, is posted to the head-quarters station of the Singhbhum district.

Singhbhum.

No. 1353A.D.—The 3rd June 1905.—Babu Jogendra Nath Ghosh, Officiating Additional District and Sessions Judge, Dacca and Mymensingh, is appointed to be a District and Sessions Judge of the third grade, *vice* Babu Rajendra Coomar Bose, about to retire.

Dacca
Mymensingh.

Babu Jogendra Nath Ghosh is also appointed to act as District and Sessions Judge of Noakhali, during the absence, on deputation, of Mr. C. W. E. Pittar, or until further orders.

Noakhali.

No. 1356A.D.—The 3rd June 1905.—Babu Sasi Bhusan Chaudhuri, Subordinate Judge and Assistant Sessions Judge, Rangpur, is appointed to act, until further orders, as Additional District and Sessions Judge, Dacca and Mymensingh, *vice* Mr. Kedar Nath Roy, on furlough, but to be on deputation as Additional District and Sessions Judge, Midnapore.

Rangpur. Dacca. Mymensingh. Midnapore.

Nos. 1365-67A.D.—The 5th June 1905.—The gentlemen named below are appointed substantively *pro tempore* to the eighth grade of Deputy Magistrates and Deputy Collectors, and are posted to the head-quarters stations of the districts mentioned against their names:—

Mr. Khettre Chandra Banerji, B.A.	...	.. Rangpur.
Babu Ganga Mohan Laskar, M.A.	...	... Dacca.
Maulvi Asadazzaman, B.L.	...	... Faridpur.

No. 1428A.D.—The 5th June 1905.—Babu Surendra Nath Ghose, Deputy Magistrate and Deputy Collector, on leave, is posted to the head-quarters station of the Rangpur district.

Rangpur.

No. 1442A.D.—The 5th June 1905.—Mr. J. A. Milligan, Assistant Magistrate and Collector, Cuttack, is appointed to have charge of the Narayanganj subdivision of the Dacca district, during the absence, on leave, of Mr. F. B. Bradley-Birt, or until further orders.

Cuttack. Dacca.

POLICE.—*No. 1315A.D.—The 3rd June 1905.*—Mr. F. C. Swaine, Assistant Superintendent of Police, Burdwan, is transferred to the head-quarters station of the 24-Parganas district.

Burdwan. 24-Parganas.

This cancels the order of the 15th May 1905, transferring Mr. W. H. Reynolds, Probationary Assistant Superintendent of Police, Muzaffarpur, to the head-quarters station of the 24-Parganas district.

Muzaffarpur.

LEGISLATIVE.—*No. 1267A.D.—The 1st June 1905.*—In exercise of the powers conferred by section 45 of the Indian Councils Act, 1861 (24 and 25 Vict., c. 67), and section 1 of the Indian Councils Act, 1892 (55 and 56 Vict., c. 14), and the orders issued thereunder, and with the previous sanction of His Excellency the Viceroy and Governor-General, the Lieutenant-Governor is pleased to nominate Mr. Edward Albert Gait, Officiating Secretary to the Government of Bengal, Financial and Municipal Departments, to be a Member of the Council of the Lieutenant-Governor of Bengal.

Council.

PROMOTIONS.

GENERAL.—*No. 1218A.D.—The 31st May 1905.*—The following confirmations, promotion and appointment are sanctioned in the Indian Civil Service, with effect from the 18th April 1905, but the officers concerned will continue to act in higher grades, or appointments, if any, until further orders:—

Confirmed in the second grade of Magistrates and Collectors.

Mr. F. C. French, *vice* Mr. H. LeMesurier, C.I.E., promoted to the first grade of Magistrates and Collectors.

Promoted substantively pro tempore *to the second grade of Magistrates and Collectors.*

Mr. Purna Chandra Mitter, *vice* Mr. F. C. French, confirmed.

Confirmed in the third grade of Magistrates and Collectors.

Mr. J. T. Rankin, *vice* Mr. F. C. French.

Appointed substantively pro tempore *to the third grade of Magistrates and Collectors.*

Mr. Kiran Chandra De, *vice* Mr. J. T. Rankin, confirmed.

Confirmed in the first grade of Joint-Magistrates and Deputy Collectors.

Mr. F. P. Dixon, *vice* Mr. J. T. Rankin.

Confirmed in the second grade of Joint-Magistrates and Deputy Collectors.

Mr. A. H. Vernède, *vice* Mr. F. P. Dixon.

LEAVE.

GENERAL.—*No. 1256A.D.—The 31st May 1905.*—Babu Mohendra Nath Mukerji, Deputy Magistrate and Deputy Collector, Jessore, is allowed leave for three months, under article 260 of the Civil Service Regulations, with effect from the date on which he may avail himself of it.

Jessore.

No. 1305A.D.—The 1st June 1905.—Babu Giris Chandra Dutta, Deputy Magistrate and Deputy Collector, Madaripur, Faridpur, is allowed leave for one month and fifteen days, under article 260 of the Civil Service Regulations, with effect from the 2nd June 1905.

Faridpur.

No. 1310A.D.—The 2nd June 1905.—Mr, J. J. Platel, Officiating District and Sessions Judge, Rangpur, is allowed combined leave for six months, viz., privilege leave for eighteen days under article 260 of the Civil Service Regulations, with effect from the 20th April 1905, and special leave for the remaining period under article 316 of the Regulations.

Rangpur.

No. 1426A.D.—The 5th June 1905.—Babu Bepin Behary Banerji, Deputy Magistrate and Deputy Collector, Rangpur, is allowed leave for three months, under article 260 of the Civil Service Regulations, with effect from the date on which he may avail himself of it.

Rangpur.

No. 1432A.D.—The 5th June 1905.—Maulvi Syud Izahar Hossain, substantive *pro tempore* Deputy Magistrate and Deputy Collector, is allowed combined leave for six months, viz, privilege leave for two months under article 260 of the Civil Service Regulations, and leave on private affairs for the remaining period under article 337 of the Regulations, with effect from the 3rd May 1905, the date on which he was relieved of his appointment as Settlement Officer in the district of Rangpur.

Rangpur.

No. 1435A.D.—The 5th June 1905.—Maulvi Abu Nasr Muhammad Ali, Deputy Magistrate and Deputy Collector, Rajshahi, is allowed leave for one month, under article 260 of the Civil Service Regulations, with effect from the date on which he availed himself of it.

Rajshahi.

No. 1440A.D.—The 5th June 1905.—Mr. F. B. Bradley-Birt, Officiating Joint-Magistrate and Deputy Collector, Narayanganj, Dacca, is allowed leave for one month, under article 260 of the Civil Service Regulations, with effect from the 15th June 1905.

Dacca.

No. 1444A.D.—The 5th June 1905.—Babu Mathura Nath Banerjee, substantive *pro tempore* Deputy Magistrate and Deputy Collector, is allowed leave for six weeks, under article 260 of the Civil Service Regulations, with effect from the date on which he is relieved of his Settlement duties in the Backergunge district.

Backergunge.

POLICE.—*No. 1259A.D.—The 1st June 1905.*—Mr. C. A. Tegart, Assistant Superintendent of Police, in charge of the District Police, Jessore, is allowed leave for three months, under article 260 of the Civil Service Regulations, with effect from the 4th July 1905.

Jessore.

No. 1419A.D.—The 5th June 1905.—Babu Girindra Chunder Mookerji, District Superintendent of Police, Jessore, is allowed furlough for one month and fifteen days, under article 308 (*b*) of the Civil Service Regulations, in extension of the leave granted to him under the order of the 10th March 1905.

Jessore.

EDUCATION.—*No. 1346A.D.—The 3rd June 1905.*—Rai Rajendra Chandra Sastri Bahadur, Librarian of the Bengal Library, is allowed leave for two months, under article 260 of the Civil Service Regulations, with effect from the 22nd May 1905, or any subsequent date on which he may avail himself of it.

Calcutta.

ECCLESIASTICAL.—*No. 1312A.D.—The 3rd June 1905.*—The Revd. R. W. H. Stuart, Chaplain of the Garrison of Fort William and the Military Hospital, is allowed combined leave for one year, five months and nineteen days, viz., privilege leave for three months under article 260 of the Civil Service Regulations, with effect from the 12th June 1905, and furlough for the remaining period under article 583 (*a*) of the Regulations.

No. 1340A.D.—The 3rd June 1905.—The Revd. L. H. Lermit, Chaplain, has been granted by His Majesty's Secretary of State for India an extension of furlough from the 16th to the 27th October 1905.

POWERS.

GENERAL.—*No. 1421A D.—The 5th June 1905.*—Babu Chandra Sekhar Kar, Deputy Collector, Naugaon, Rajshahi, is vested with the powers of a Collector, under Act I of 1894, in that subdivision.

Rajshahi.

The following orders are republished from the *Assam Gazette*:—

No. 4515G.—The 1st June 1905.—With effect from the 10th April 1905, the date on which Mr. P. E. Cammiade, I.C.S., Assistant Commissioner, first grade, substantive *pro tempore*,

received charge of his office as Officiating District and Sessions Judge, Sylhet, and Sessions Judge, Cachar, *vice* Mr. B. B. Newbould, I.C.S., on combined leave,—

Mr. G. E. Lambourn, I.C.S., Officiating Assistant Commissioner, second grade, to officiate as Assistant Commissioner, first grade.

„ S. E. Stinton, I.C.S., Assistant Commissioner, third grade, to officiate as Assistant Commissioner, second grade.

No. 4516G.—The 1st June 1905.—With effect from the 14th April 1905, the date on which Major D. Herbert, I.A., Officiating Deputy Commissioner, second grade, received charge of his office as Officiating Judge, Assam Valley Districts, from Mr. F. E. Jackson, I.C.S.,—

* * * * * * * *

Mr. F. E. Jackson, I.C.S., Officiating Judge, Assam Valley Districts, to revert to his substantive appointment of Deputy Commissioner, third grade.

No. 4517G.—The 1st June 1905.—With effect from the 22nd April 1905, the date on which Mr. A. W. Davis, I.C.S., Deputy Commissioner, first grade, proceeded on combined leave,—

Messrs. B. C. Allen, I.C.S. (on special duty), and F. E. Jackson, I.C.S., Deputy Commissioners, third grade, to officiate as Deputy Commissioners, second grade.

Mr. A. J. Lainé, I.C.S., Officiating Assistant Commissioner, second grade, to officiate as Assistant Commissioner, first grade.

No. 4518G.—The 1st June 1905.—With effect from the 28th April 1905, in consequence of the return from leave of Mr. J. C. Arbuthnott, C.I.E., I.C.S., Deputy Commissioner, first grade,—

Messrs. B. C. Allen, I.C.S. (on special duty), and F. E. Jackson, I.C.S., Officiating Deputy Commissioners, second grade, to revert to their substantive appointments of Deputy Commissioners, third grade.

No. 4519G.—The 1st June 1905.—With effect from the 28th April 1905, in consequence of the return from special duty of Mr. A. Majid, Assistant Commissioner, second grade, substantive *pro tempore*, and Officiating Assistant Commissioner, first grade,—

Mr. A. R. Edwards, I.C.S., Assistant Commissioner, second grade, substantive *pro tempore*, to cease to be substantive *pro tempore* in that grade, but to continue to officiate as Assistant Commissioner, first grade.

„ A. J. Lainé, I.C.S., Officiating Assistant Commissioner, first grade, to officiate as Assistant Commissioner, second grade.

No. 4520G.—The 1st June 1905.—Privilege leave of absence for three months, under article 260 of the Civil Service Regulations, is granted to Mr. J. G. Dunlop, I.C.S., Assistant to the Political Agent in Manipur and Superintendent of the State, with effect from the 3rd July 1905, or the subsequent date on which he may avail himself of it.

R. W. CARLYLE,
Offg. Chief Secy. to the Govt. of Bengal.

REVENUE DEPARTMENT.

NOTIFICATIONS.

No. 998T.R.—The 1st June 1905.—Under section 3 of the Bengal Survey Act, V (B.C.) of 1875, the Lieutenant-Governor of Bengal is pleased to order that a survey shall be made of all the B class lands lying in miles 198½ to 201 of the Loop Line of the East Indian Railway in the district of Sonthal Parganas.

Sonthal Parganas.

No. 999T.R.—The 1st June 1905.—The Lieutenant-Governor is pleased, under section 4 of the Bengal Survey Act, V (B.C.) of 1875, to vest Mr. H. Ll. L. Allanson, Settlement Officer of the Sonthal Parganas, with the powers of a Superintendent of Survey, in the district of the Sonthal Parganas, for the survey of the Railway B class lands in miles 198½ to 201 of the Loop Line of the East Indian Railway.

Sonthal Parganas.

No. 1000T.R.—The 1st June 1905.—In exercise of the powers vested in him by section 9 of the Sonthal Parganas Settlement Regulation, III of 1872, as amended by section 4 of the Sonthal Parganas Rent Regulation, II of 1886, the Lieutenant-Governor is pleased to declare that settlement shall be made of the areas specified below, situated within the undermentioned estate, in the district of Sonthal Parganas.

Sonthal Parganas.

Mr. H. Ll. L. Allanson, Settlement Officer of the Sonthal Parganas, is empowered, under section 5, Regulation III of 1872, to try civil suits, in supersession of the ordinary courts, connected with the land hereby declared to be under settlement.

Name of estate.	Nature of estate.	Tauzi No.	Number of villages.	Area in acres.
B class land, Loop Line.	Government khas mahal.	41	Strips of land situated in 9 villages within miles 198½ to 201 of the Loop Line.	81·38

No. 1001T.R.—The 1st June 1905.—The Lieutenant-Governor is pleased, under section 10, Regulation III of 1872, to appoint Mr. H. Ll. L. Allanson, Settlement Officer of the Sonthal Parganas, as the officer vested with necessary powers to settle the B class lands in miles 198½ to 201 of the Loop Line of the East Indian Railway in the district of Sonthal Parganas.

Sonthal Parganas.

No. 1003T.R.—The 1st June 1905.—It is hereby notified for general information that in consequence of the change in the course of the river Ganges, the village of Raipur Hasanpur (thakbust No. 20) and a part of village Sabalpur Deara (thakbust No. 21) of pargana Azimabad are transferred fro[illegible] jurisdictions of thanas Phulwari and Patna City, respectively, in the district of Patna, to [illegible] jurisdiction of thana Hajipur, in the district of Muzaffarpur.

Patna.
Muzaffarpur.

No. 1034T.R.—The 2nd June 1905.—Whereas it appears to the Lieutenant-Governor of Bengal that land is likely to be required to be taken up by Government at the expense of Messrs. Martin & Co. for the extension of Barasat-Basirhat Light Railway, passing through the villages of Basirhat, Dundeerhat, Ununtpur, Goluichandee, Madhavpur, Patteelah-chander, Golaichandi, Kodaleah, Surneah, Taukee, [illegible]ah, Kuddumthosa, Rajeepur, Lashkarnuggar, Augurpara, and Hoseinabad, in the dis[illegible] Parganas, notice is hereby given, under the provisions of section 4 of Act I of [illegible] all whom it may concern, that a Survey Party is about to take the field for the pu[illegible] making a survey of the proposed extension, and that in exercise of the powers co[illegible] by the abovementioned section, the Lieutenant-Governor has authorized the Engineers and other officers for the time being engaged in the undertaking to enter upon and survey and do all other acts required for the proper execution of their works as provided or specified in the said section.

24-Parganas.

No. 1053T.R.—The 3rd June 1905.—This Government declaration No. 2152J.—D., dated the 3rd September 1904, published at page 1265, Part I of the *Calcutta Gazette* of the 7th idem, in respect of land required for the site of a beat-house at Motiganj, in the Santipur town, in the village of Santipur, pargana Santipur Ukra, zilla Nadia, is hereby cancelled.

Nadia.

No. 1060T.R.—The 4th June 1905.—Babu Hari Das Roy, Sub-Deputy Collector, is appointed to be Assistant Settlement Officer in respect of Lot No. 29, Nalgora Abad, tauzi No. 1501, in the 24-Parganas portion of the Sundarbans, with effect from the forenoon of the 3rd January 1905.

24-Parganas.
Sundarbans.

R. W. CARLYLE,
Offg. Chief Secy. to the Govt. of Bengal.

DECLARATION—By the Government of Bengal, Revenue Department.

No. 970T.R.—The 29th May 1905.—Whereas certain land was acquired by the Bengal Government, under the provisions of Act I of 1894 and Act XVIII of 1885, for a public purpose, viz, for siding No. 1 of the Bengal-Nagpur Railway Company in Jherria, mauza Jamadoba, district Manbhum, and whereas coal-mines are situate under the said land, and whereas the Indian Collieries Syndicate, Limited, through their agents, Messrs. Kilburn and Company, have given notice to the Government of Bengal, in accordance with the provisions of Act XVIII of 1885, that the said Company intend to work the mines in question, and whereas the mines have been inspected by the officer appointed by the Bengal Government for the purpose under section 5 (1) of Act XVIII of 1885, and whereas it appears to the Bengal Government that the working out of the coal of the mines underlying the said land is likely to cause damage to the surface of the said land and to the works constructed thereon, and whereas the said Indian Collieries Syndicate, Limited, have agreed not to work and get minerals underlying the land acquired for their siding or underlying the land acquired for the branch or other lines with which the siding is connected, or underlying the land of the branch or branches

Manbhum.

connecting the said siding with the main line, in such a manner as to injure or to endanger the safety of the undertaking or any part thereof, nor to claim any compensation for any restricted working:

Now, therefore, the Lieutenant-Governor of Bengal is pleased to declare under section 5, sub-section (2), clause (*b*) of the abovementioned Act, XVIII of 1885, that the working shall be carried on by the said Indian Collieries Syndicate, Limited, in the manner and subject to the restrictions below specified, viz.:—

That no coal be worked north of the line F. H. K. L. Between the lines F. G. and H. M. the galleries be driven not more than 10 feet wide with centres not less than 60 feet apart, forming pillars not less than 50 feet square. North of the line K. M. N. P. the galleries be driven not more than 8 feet wide, with centres not less than 80 feet apart, forming pillars not less than 72 feet square. The galleries may be driven the full height of the seam, provided that the main haulage level marked Y. Z. may be driven under the acquired land at a width not exceeding 9 feet; and that in all the above cases no further excavation shall be made in any of the galleries which already have been driven, the actual heights and widths of which have been carefully recorded on the plan marked L. A. M. A. No. 30, signed by the Chief Inspector of Mines.

The plan referred to may be seen in the office of the Chief Inspector of Mines in India.

R. W. CARLYLE,

Offg. Chief Secy. to the Govt. of Bengal.

DECLARATION.

No. 971T.R.—The 27th May 1905.—Whereas it appears to the Lieutenant-Governor of Bengal that land is required to be taken by Government at the expense of the Bhuddessur Municipality for public purpose, viz., for the widening of the Mollapukhur Lane, in the Bhuddessur Municipality, in the village of Telenepara, pargana Boro, zilla Hooghly, it is hereby declared that for the above purpose a piece of land measuring, more or less, 3 cottahs 9½ chitaks of standard measurement, bounded on the north by the Mollapukhur Lane, on the west by land of Giribala Devi and others and land of Ishur Chunder Pattak, on the south by West Millgate Lane, and on the east by the land of Ishur Chunder Pattak and Devi, is required within the aforesaid village of Telenepara.

Hooghly.

This declaration is made, under the provisions of section 6 of Act I of 1894, to all whom it may concern.

A plan of the land may be inspected in the office of the Collector of Hooghly.

R. W. CARLYLE,

Offg. Chief Secy. to the Govt. of Bengal.

DECLARATION.

No. 1024T.R.—The 2nd June 1905.—Whereas it appears to the Lieutenant-Governor of Bengal that a house and land are required to be taken by Government at the public expense for a public purpose, viz., for Collector's residence at Burdwan, in the village of Sadhanpur, pargana Burdwan, zilla Burdwan, it is hereby declared that for the above purpose a house with out-offices called the Collector's residence with a piece of land as compound measuring, more or less, 71 bighas of standard measurement, bounded on the east by Mr. Stoney's house, now belonging to the estate of the late Lala Bansa Gopal Nandey, on the north by Bhaluka river and the late Lala Bansa Gopal Nandey's garden, land and tank, on the west by Sadhanpur road and East Indian Railway Company's acquired land, and on the south by Sadhanpur road and circuit-house and dâk bungalow compound, is required within the aforesaid village of Sadhanpur.

Burdwan.

This declaration is made, under the provisions of section 6 of Act I of 1894, to all whom it may concern.

A plan of the land may be inspected in the office of the Land Acquisition Deputy Collector at Burdwan.

R. W. CARLYLE,

Offg. Chief Secy. to the Govt. of Bengal.

DECLARATION.

No. 1025T.R.—The 2nd June 1905.—Whereas it appears to the Lieutenant-Governor of Bengal that a house and land are required to be taken by Government at the public expense for a public purpose, viz., for a residence for the District Judge at Burdwan, in the village of Sadhanpur, pargana Burdwan, zilla Burdwan, it is hereby declared that for the above purpose a house with out-offices at present

Burdwan.

occupied by the East Indian Railway Company with a piece of land measuring, more or less 12 bighas of standard measurement, bounded on the east by Babu Sashi Bhusan Basu's garden land, on the north by the Bhaluka river, on the west by the late Lala Bansa Gopal Nandey's land, and on the south by the Sadhanpur road, is required within the aforesaid village of Sadhanpur.

This declaration is made, under the provisions of section 6 of Act I of 1894, to all whom it may concern.

A plan of the land may be inspected in the office of the Land Acquisition Deputy Collector at Burdwan.

R. W. CARLYLE,

Offg. Chief Secy. to the Govt. of Bengal.

DECLARATION.

No. 1026T.R.—The 2nd June 1905.—Whereas it appears to the Lieutenant-Governor of Bengal that a house and land are required to be taken by Government at the public expense for a public purpose, viz., for a residence for the District Superintendent of Police at Burdwan, in the village of Sadhanpur, pargana Burdwan, zilla Burdwan, it is hereby declared that for the above purpose a house with outhouses called Mr. Stoney's house with a piece of land measuring, more or less, 31 bighas 11 cottahs and 2 chitaks of standard measurement, bounded on the east by Babu Lalit Mohan Singh Ray's land, on the north by the Bhaluka river, on the west by the late Lala Bansa Gopal Nundey's land, and on the south by the Sadhanpur road, is required within the aforesaid village of Sadhanpur.

Burdwan.

This declaration is made, under the provisions of section 6 of Act I of 1894, to all whom it may concern.

A plan of the land may be inspected in the office of the Land Acquisition Deputy Collector at Burdwan.

R. W. CARLYLE,

Offg. Chief Secy. to the Govt. of Bengal.

DECLARATION.

No. 1033T.R.—The 29th May 1905.—Whereas it appears to the Lieutenant-Governor of Bengal that land is required to be taken by Government at the expense of the District Board of Faridpur for a public purpose, viz., for protecting the 1st mile of Sabikhan's jangal road, in the villages of Ghagar, Kokhea and Rarirbeel, pargana Kotwalipara, zilla Faridpur, it is hereby declared that for the above purpose a piece of land measuring, more or less, 22 bighas of standard measurement, bounded on the north by villages Ghagar, Kokhea and Rarirbeel, on the south by the existing Sabikhan's jangal road and khal, on the west by the Katta khal and Ghagar market, and on the east by the Katta khal, is required within the aforesaid villages of Ghagar, Kokhea and Rarirbeel.

Faridpur.

This declaration is made, under the provisions of section 6 of Act I of 1894, to all whom it may concern.

A plan of the land may be inspected in the office of the Collector of Faridpur.

R. W. CARLYLE,

Offg. Chief Secy. to the Govt. of Bengal.

DECLARATION.

No. 1052T.R.—The 2nd June 1905.—Whereas it appears to the Lieutenant-Governor of Bengal that land is required to be taken by Government at the public expense for a public purpose, viz., for khas kutchery at Chamta in the village of Chamta, pargana Buzrugumedpur, zilla Backergunge, it is hereby declared that for the above purpose a piece of land measuring, more or less, 6 bighas and 12 cottahs of standard measurement, bounded on the north by the Chamta Bandar, on the east by the present compound of the Khas Mahal Office at Chamta, on the west by the Beshkhaly River, and on the south by Abdul Howladar's paddy field and District Board tank, is required within the aforesaid village of Chamta.

Backergunge.

This declaration is made, under the provisions of section 6 of Act I of 1894, to all whom it may concern.

A plan of the land may be inspected in the office of the Collector of Backergunge.

R. W. CARLYLE,

Offg. Chief Secy. to the Govt. of Bengal.

NOTIFICATION.

UNDER rule VIII of the rules framed under the Chota Nagpur Encumbered Estates Act, VI of 1876, it is hereby notified that the undermentioned immoveable property, which was brought under the management of the Revenue Authorities under the notification published in the *Calcutta Gazette*, dated 20th August 1879, has been restored to the possession and enjoyment of its owner on the 16th May 1905 under the provisions of section 12, Act VI of 1876, as amended by section 6 of Act V of 1884, the debts due by the estate having been fully paid off:—

Name of estate.	Name of proprietor.
Lalganj.	Lal Raghunath Sah Deo.

F. A. SLACKE, *Commissioner.*

COMMR.'S OFFICE, RANCHI, *the 31st May 1905.*

FINANCIAL DEPARTMENT.

NOTIFICATIONS.

No. 187 T.S.R.—The 26th May 1905.—Babu Surjya Kumar Das, Deputy Collector, is appointed Deputy Collector of Income-tax in the district of Faridpur, *vice* Babu Jogendra Nath Sirkar, and under section 40 of Act II of 1886 is vested with the powers of a Collector under the Act.

Faridpur.

No. 205 T.S.R.—The 30th May 1905.—It is hereby notified that, under the authority vested in him by the last clause of section 76 of the Sea Customs Act VIII of 1878, the Lieutenant-Governor suspends the operation of that section in the port of Chittagong so far as it relates to the issue of boat-notes for export cargo.

Chittagong.

No. 208 T.—O.—The 30th May 1905.—With reference to Notification No. 93T.O., dated the 28th April 1905, granting Mr. F. W. Harris, Assistant Opium Agent, in charge of the Budaon Division, privilege leave for one month, with effect from the 5th June 1905 or any subsequent date, Mr. L. S. Graham, Assistant Opium Agent, Aligarh, is appointed to perform the duties of Sub-Deputy Opium Agent, Budaon Division, during the absence, on leave, of Mr. Harris, or until further orders.

Aligarh.
Budaon.

No. 209 T.—O.—The 30th May 1905.—With reference to Notification No. 150T.O., dated the 12th May 1905, granting Mr. C. J. C. Ricker, Sub-Deputy Opium Agent, Basti, privilege leave for six weeks, with effect from the 2nd June 1905 or any subsequent date, Mr. A. B. Kennedy, Sub-Deputy Opium Agent, Gorakhpur Division, is appointed to hold charge of the Basti Division, in addition to his other duties, during the absence, on leave, of Mr. Ricker or until further orders.

Gorakhpur.
Basti.

No. 210 T.—O.—The 30th May 1905.—With reference to Notification No. 145T.O., dated the 11th May 1905, granting Mr. A. C. Bryson, Sub-Deputy Opium Agent, Fyzabad, privilege leave for two months, with effect from the 25th May 1905 or any subsequent date, Mr. C. O'Donnell, Sub-Deputy Opium Agent, Gonda Division, is appointed to hold charge of the Fyzabad Division, in addition to his other duties, during the absence, on leave, of Mr. Bryson, or until further orders.

Fyzabad.
Gonda.

No. 211 T.—O.—The 30th May 1905.—With reference to Notification No. 151T. O., dated the 12th May 1905, granting Mr. C. F. E. Meares, Sub-Deputy Opium Agent, Mirzapur, privilege leave for one month and twelve days, with effect from the 25th May 1905 or any subsequent date, Mr. G. W. Oliphant, Assistant Opium Agent, Benares, is appointed to perform the duties of Sub-Deputy Opium Agent, Mirzapur, during the absence, on leave, of Mr. Meares, or until further orders.

Benares.
Mirzapur.

No. 218 T.—O.—The 3rd June 1905.—Mr. A. W. Ross, Sub-Deputy Opium Agent, Cawnpur, is granted privilege leave for fifteen days, under article 260 of the Civil Service Regulations, with effect from the 19th June 1905, or any subsequent date on which he may avail himself of it.

Cawnpur and Allahabad.

Mr. Albert Datta, Assistant Opium Agent, in charge of the Allahabad Division, is appointed to hold charge of the Cawnpur Division, in addition to his other duties, during the absence, on leave, of Mr. Ross, or until further orders.

No. 219 T.—O.—The 3rd June 1905.—Mr. E. C. Godfrey, Assistant Opium Agent attached to the Benares Opium Agency, is granted privilege leave for one month, with effect from the 9th June 1905, or any subsequent date on which he may avail himself of it.

Benares Agency.

E. A. GAIT,
Offg. Secy. to the Govt. of Bengal.

MEDICAL DEPARTMENT.

NOTIFICATIONS.

No. 841T.M.—The 30th May 1905.—The undermentioned Assistant Surgeons of the first grade are promoted to the senior grade:—

Assistant Surgeon Hari Das Mitra, with effect from 17th November 1904, *vice* Assistant Surgeon Prisitosh Haldar, retired.

Assistant Surgeon Khirode Chandra Roy, with effect from 30th January 1905, *vice* Assistant Surgeon Durga Nanda Sen.

No. 843T.M.—The 30th May 1905.—Assistant Surgeon Durga Nanda Sen is appointed to be a Civil Surgeon, with effect from the 29th January 1905, *vice* Assistant Surgeon Brojo Nath Chowdhury, retired, and is posted to Malda.

Malda.

No. 900T.M.—The 2nd June 1905.—Revd. Father R Louwyck, S J., is appointed to be a member of the Committee for the Management of the Eden Sanitarium and Hospital at Darjeeling, *vice* Revd. Father L. Bodson, resigned.

Darjeeling.

No. 911T.M.—The 2nd June 1905.—Lieutenant-Colonel T. Grainger, I.M S., is appointed to be Civil Surgeon of Hazaribagh, *vice* Lieutenant-Colonel R. Macrae, I.M S., transferred, but will continue, until further orders, to act as Civil Surgeon of Muzaffarpur, where he is at present stationed.

Hazaribagh.
Muzaffarpur.

No. 913T.M.—The 2nd June 1905.—Major B. H. Deare, I.M S., at present on leave, is appointed to be Civil Surgeon of Champaran, *vice* Lieutenant-Colonel F. R. Swaine, I.M.S., retired.

Champaran.

No. 915T.M.—The 2nd June 1905.—Lieutenant-Colonel H. J. Dyson, I.M.S., is appointed to be Civil Surgeon of Saran, *vice* Major D. M. Moir, I.M.S., transferred, but will continue, until further orders, to act as Civil Surgeon of Bhagalpur, where he is at present stationed.

Saran.
Bhagalpur.

No. 934T.M.—The 3rd June 1905.—Lieutenant-Colonel H. J. Dyson, I.M.S., is appointed, with effect from the 26th February 1905, to act as a Civil Surgeon of the first class, during the absence, on leave, of Lieutenant-Colonel R. Cobb, I.M.S., or until further orders.

No. 930T.M.—The 3rd June 1905.—It is hereby notified that the Lieutenant-Governor of Bengal, in exercise of the powers conferred by sections 4 and 5 of the Charitable Endowments Act, VI of 1890, and upon the application and with the concurrence of Babu Girish Chandra Basu of Ghiritakandi in the district of Faridpur, doth hereby order and direct that the Government Promissory notes of which the particulars are contained in the first schedule hereunder written, shall from the date of the first publication of this notification in the *Calcutta Gazette* vest, and be thenceforth vested, in the Treasurer of Charitable Endowments for the territories subject to the Government of Bengal, to be held by him and his successors (subject to the provisions of the said Charitable Endowments Act, 1890, and the rules, from time to time, framed thereunder by the Governor-General in Council) upon trust for ever thereafter to receive the interest of the Government Promissory notes when and as the same shall become due and payable, and from time to time apply the same to the maintenance of the Ghiritakandi Charitable Dispensary established at Ghiritakandi, in the district of Faridpur, on the premises described in the third schedule hereunder written in accordance with the provisions made in that behalf in the scheme, of which the particulars are contained in the second schedule hereunder written, and it is hereby further notified that the said scheme, of which the particulars are contained in the said second schedule shall come into operation on the vesting of the said Government Promissory notes in the said Treasurer of Charitable Endowments for the territories subject to the Government of Bengal:—

Faridpur.

The first schedule above referred to.

Government Promissory Note of the 3½ per cent. loan of 1854-55, No. 065859, for Rs. 3,000.

Government Promissory Note of the 3½ per cent. loan of 1854-55, No. 078586, for Rs. 2,000.

Government Promissory Note of the 3½ per cent. loan of 1865, No. 130138, for Rs. 5,000.

Government Promissory Note of the 3½ per cent. loan of 1900-01, No. 013575, for Rs. 5,000.

The second schedule above referred to.

1. The Treasurer of Charitable Endowments for the territories subject to the Government of Bengal shall stand possessed of the Government Promissory notes, of which the particulars are contained in the first schedule above written, upon trust to receive the interest thereon when and as the same respectively shall become payable (including any interest already accrued due), and from time to time to apply the same in accordance with the

conditions hereinafter contained in or towards the maintenance of the Ghiritakandi Charitable Dispensary established at Ghiritakandi, in the district of Faridpur, on the premises described in the third schedule hereunder written.

2. The administration of the interest of the said Government Promissory notes shall be entrusted to the District Magistrate of Faridpur for the time being as Trustee.

3. The said Trustee shall apply the annual interest of the said Government Promissory notes exclusively in or towards the upkeep and maintenance of the said Ghiritakandi Charitable Dispensary.

4. Any surplus which may remain of the annual interest of the said Government Promissory notes after application of the same in manner provided in clause 3 hereof shall be deposited by the said Trustee in the Post Office Savings Bank and may be applied by him for such purposes in connection with the said charitable dispensary as he shall think fit or may be invested from time to time in—

(*a*) promissory notes, debentures, stock and other securities of the Government of India, or of the United Kingdom of Great Britain and Ireland;

(*b*) bonds, debentures and annuities charged by the Imperial Parliament on the revenues of India;

(*c*) stock or debentures of, or shares in, Railway or other Companies, the interest whereon has been guaranteed by the Secretary of State for India in Council;

(*d*) debentures or other securities for money issued by or on behalf of any local authority in exercise of powers conferred by an Act of a Legislature established in British India;

(*e*) any security authorised by an order made by the Governor-General in Council under section 4, sub-section 3(*e*) of Act VI of 1890.

In the event of any investment being so made, the same shall be transferred so as to vest in the Treasurer of Charitable Endowments upon the trusts declared in the above notification.

5. Subject to this notification, the rules of the Government of Bengal for the time being in force relating to the management of charitable dispensaries shall apply to the conduct and management of the said Ghiritakandi Charitable Dispensary.

The third schedule above referred to.

All those the buildings standing and being on all that piece or parcel of land containing an area of 13 cottahs, situate at Ghiritakandi, in the district of Faridpur, and bounded—

On the north—By the paddy-fields of Rup Chand Mridha and Rai Charan Shikari;

On the east—By the west embankment of Girish Chandra Bose's tank adjoining the site of the dispensary;

On the west—By the corrugated-iron shed of Girish Chandra Bose for the use of the local school; and

On the south—By the paddy-fields of Chintaram Mondal.

E. A. GAIT,
Offg. Secy. to the Govt. of Bengal.

JUDICIAL DEPARTMENT.

No. 2915A.

APPOINTMENTS AND TRANSFERS.

No. 1302A.D.—The 2nd June 1905.—Babu Behari Lall Ghosh, M.A., B.L., is appointed to act as a Munsif in the district of Backerguuge, to be ordinarily stationed at Patuakhali, during the absence, on leave, of Babu Tulsi Das Mukerjee, or until further orders.

Backergunge.

No. 1313A.D.—The 3rd June 1905.—Babu Nikunja Behary Dutta, B.L., is appointed to act as a Munsif in the district of Dacca, to be ordinarily stationed at Narayanganj, during the absence, on leave, of Babu Benode Behari Mitter, or until further orders.

Dacca.

No. 1319A.D.—The 3rd June 1905.—Babu Kumud Kanta Sen, M.A., B.L., is appointed to act as a Munsif in the district of Bankura, to be ordinarily stationed at the Sadar station, during the absence, on leave, of Babu Rama Prosad Moitra, or until further orders.

Bankura.

No. 1424A.D.—The 5th June 1905.—Babu Aswini Kumar Das, M.A., B.L., is appointed to act as a Munsif in the district of Birbhum, to be ordinarily stationed at Dubrajpur, during the absence, on leave, of Babu Brajes Chandra Sinha, or until further orders.

Birbhum.

LEAVE.

No. 1327A.D.—The 3rd June 1905.—Babu Bhuban Mohan Ghose, Small Cause Court Judge, Howrah, Hooghly and Serampore, in the district of Hooghly, is allowed leave for twelve days, under article 271 of the Civil Service Regulations, with effect from the 1st June 1905, or any subsequent date on which he may be relieved.

Hooghly.

No. 2910A.—The 30th May 1905.—Babu Brajes Chandra Sinha, Munsif of Dubrajpur, in the district of Birbhum, is allowed leave for thirty-five days, viz., six days under article 274 of the Civil Service Regulations, and the remaining period under article 271 of the same Regulations, with effect from the 7th June 1905, or from the date on which he may be relieved.

Birbhum.

No. 2911A.—The 1st June 1905.—Babu Gagan Behari Chowdhuri, Munsif of Ulubaria, in the district of Hooghly, is allowed leave for sixty-one days, under article 271 of the Civil Service Regulations, with effect from the 19th February 1905, in supersession of the leave granted to him under the orders of the 14th February, 4th March and 30th April 1905.

Hooghly.

No. 2912A.—The 2nd June 1905.—Babu Bepin Behari Ghose, Munsif of Bagerhat, in the district of Jessore, is allowed leave for one month, viz., four days under article 274 of the Civil Service Regulations, and the remaining period under article 271 of the same Regulations, with effect from the 5th June 1905, or from the date on which he may be relieved.

Jessore.

No. 2913A.—The 3rd June 1905.—Babu Hem Chandra Bose, Additional Munsif of Kushtia and Ranaghat, now on deputation to Chuadanga, in the district of Nadia, is allowed leave for seven days, under article 271 of the Civil Service Regulations, in extension of the leave granted to him under the order of the 17th May 1905.

Nadia.

The 3rd June 1905.—Babu Satish Chandra Biswas, Munsif of Magura, in the district of Jessore, is allowed leave for six months, viz., eight days under article 271 of the Civil Service Regulations, and the remaining period under article 339 of the same Regulations, with effect from the date on which he availed himself of it.

Jessore.

The 3rd June 1905.—Maulvi Mirza Bedar Bakht, Munsif of Aurangabad, in the district of Gaya, is allowed leave for one month, viz., six days under article 274 of the Civil Service Regulations, and the remaining period under article 271 of the same Regulations, with effect from the 25th April 1905.

Gaya.

The 3rd June 1905.—Babu Nritya Gopal Sarkar, Munsif, on leave, is allowed leave for eight months, under article 336 of the Civil Service Regulations, in extension of the leave granted to him under the order of the 20th February 1905.

POWERS.

No. 1253A.D.—The 31st May 1905.—Rai Narayan Chunder Naik Bahadur, Deputy Magistrate, who has, under the orders of this date, been posted to the head-quarters station of the Jessore district, is vested with the powers of a Magistrate of the first class and with the power to try summarily the offences mentioned in section 260 of the Code of Criminal Procedure.

Jessore.

No. 1290A.D.—The 2nd June 1905.—In exercise of the power conferred by sub-section (1) of section 565 of the Code of Criminal Procedure, 1898, the Lieutenant-Governor is pleased to empower Mr. J. A. L. Swan, a Magistrate of the first class, in the district of the 24-Parganas, to order, at the time of passing sentence of imprisonment on any person referred to in that sub-section, that the residence or change of residence of such person after release shall be notified as provided by the rules made under sub-section (3) of the section.

24-Parganas.

Mr. Swan is also vested with powers under sections 110, 133, 143, 144 and 524 of the Code of Criminal Procedure.

No. 1317A.D.—The 3rd June 1905.—Mr. J. C. Leighton, Officiating Joint-Magistrate, Dinapore, Patna, is appointed, under the provisions of section 22, Act V of 1898, to act as a Justice of the Peace within the territories under the Lieutenant-Governor's control.

Patna.

No. 1330A.D.—The 3rd June 1905.—Babu Durga Prosad, Deputy Magistrate, Darbhanga, is vested with the power to try summarily the offences mentioned in section 260 of the Code of Criminal Procedure.

Darbhanga.

No. 1349A.D.—The 3rd June 1905.—Mr. W. I. K. Howard, Officiating Collector of Customs and Port Officer, Chittagong, is vested with the powers of a Magistrate of the first class.

Chittagong.

No. 1351A.D.—The 3rd June 1905.—Mr. W. I. K. Howard, Officiating Collector of Customs and Port Officer, Chittagong, is appointed, under the provisions of section 22, Act V of 1898, to act as a Justice of the Peace within the territories under the Lieutenant-Governor's control.

Chittagong.

Nos. 1365-67A.D.—The 5th June 1905.—The gentlemen named below, who have, under the orders of this date, been appointed substantively *pro tempore* to the eighth grade of Deputy Magistrates and posted to the head-quarters stations of the districts mentioned against their names, are vested with the powers of a Magistrate of the third class:—

Mr. Khettre Chandra Banerji, B.A.	...	Rangpur.
Babu Ganga Mohan Laskar, M.A. ...	...	Dacca.
Maulvi Asadazzaman, B.L. ...	...	Faridpur.

No. 1415A.D.—The 5th June 1905.—Babu Nagendra Nath Mitra, Munsif, Nabinagar, in the district of Tippera, is vested with the functions of a District Court, under section 26, sub-section (1), of Act VII of 1889, within the local limits of the Nabinagar Munsifi.

Tippera.

R. W. CARLYLE,

Offg. Chief Secy. to the Govt. of Bengal.

APPOINTMENTS AND TRANSFERS.

No. 1659J.D.—The 3rd June 1905.—Mr. Gerald Durand Brae is re-appointed to be an Honorary Magistrate of the Sultanganj Independent Bench, in the district of Bhagalpur.

Bhagalpur.

No. 1664J.D.—The 3rd June 1905.—Babu Girish Chandra Maity is re-appointed to be an Honorary Magistrate of the Contai Independent Bench, in the district of Midnapore.

Midnapore.

No. 1667J.D.—The 3rd June 1905.—Babu Mukunda Lal Sirkar and Babu Sri Nath Chowdhury are re-appointed to be Honorary Magistrates of the Sadar Independent Bench, in the district of Pabna.

Pabna.

No. 1674J.D.—The 3rd June 1905.—Babu Debendra Nath Sarkar is appointed to be an Honorary Magistrate of the Sadar Independent Bench, in the district of Bogra.

Bogra.

No. 1723J.D.—The 3rd June 1905.—Babu Bansidhar Mohapatra is appointed to be an Honorary Magistrate of the Independent Bench at Jajpur, in the district of Cuttack.

Cuttack.

No. 1739J.D.—The 3rd June 1905.—Babu Rajendra Narain Singh is re-appointed to be an Honorary Magistrate of the Independent Bench at Supaul, in the district of Bhagalpur.

Bhagalpur.

No. 1790J.D.—The 5th June 1905.—Babu Surendra Nath Ganguli, an Honorary Magistrate of the Independent Bench at Nilphamari, in the district of Rangpur, is authorised to sit singly at Domar for the trial of such cases as may be made over to him by the Subdivisional Officer of Nilphamari.

Rangpur.

No. 1792J.D.—The 5th June 1905.—The gentlemen named below are appointed to be Honorary Magistrates of the Independent Bench at Jamalpur, in the district of Monghyr:—

Monghyr.

Mr. Charles David St. Clair Wedderburn.
„ William Bellingham Carter.

RESIGNATIONS.

No. 1652J.D.—The 3rd June 1905.—The Lieutenant-Governor accepts the resignation tendered by Mr. Tilak Dhari Lal of his appointment as an Honorary Magistrate of the Sadar Independent Bench, in the district of Bhagalpur.

Bhagalpur.

No. 1721J.D.—The 3rd June 1905.—The Lieutenant-Governor accepts the resignation tendered by Babu Charu Chandra Mitra of his appointment as an Honorary Magistrate of the Jajpur Independent Bench, in the district of Cuttack.

Cuttack.

POWERS.

No. 1660J.D.—The 3rd June 1905.—Mr. Gerald Durand Brae, who has been re-appointed to be an Honorary Magistrate of the Sultanganj Independent Bench, in the district of Bhagalpur, is vested with the powers of a Magistrate of the third class.

Bhagalpur.

No. 1665J.D.—The 3rd June 1905.—Babu Girish Chandra Maity, who has been re-appointed to be an Honorary Magistrate of the Contai Independent Bench, in the district of Midnapore, is vested with the powers of a Magistrate of the third class.

Midnapore.

No. 1668J.D.—The 3rd June 1905.—Babu Mukunda Lal Sirkar and Babu Sri Nath Chowdhury, who have been re-appointed to be Honorary Magistrates of the Sadar Independent Bench, in the district of Pabna, are vested with the powers of a Magistrate of the third class.

Pabna.

No. 1671J.D.—The 3rd June 1905.—In exercise of the powers conferred by section 185A, sub-section (1) of the Code of Civil Procedure, the Lieutenant-Governor is pleased to direct that evidence in cases in which an appeal lies shall be taken down by Mr. E. F. Ainslie, Deputy Magistrate and Munsif of Alipur Duars, Jalpaiguri, with his own hand in the English language.

Jalpaiguri.

No. 1675J.D.—The 3rd June 1905.—Babu Debendra Nath Sarkar who has been appointed to be an Honorary Magistrate of the Sadar Independent Bench, in the district of Bogra, is vested with the powers of a Magistrate of the third class.

Bogra.

No. 1724J.D.—The 3rd June 1905.—Babu Bansidhar Mohapatra, who has been appointed to be an Honorary Magistrate of the Independent Bench at Jajpur, in the district of Cuttack, is vested with the powers of a Magistrate of the third class

Cuttack.

No. 1740J.D.—The 3rd June 1905.—Babu Rajendra Narain Singh, who has been re-appointed to be an Honorary Magistrate of the Independent Bench at Supaul, in the district of Bhagalpur, is vested with the powers of a Magistrate of the third class.

Bhagalpur.

No. 1766J.D.—The 3rd June 1905.—In the exercise of the power conferred by section 26, sub-section (1) of the Succession Certificate Act, 1889 (VII of 1889), the Lieutenant-Governor is pleased to invest each of the two permanent Subordinate Judges of the 24-Parganas, the permanent Munsifs of Alipore, the Munsif of the 1st Court at Barasat, and the Munsif of the 1st Court at Baruipore, in the district of the 24-Parganas, with the functions of a District Court under the said Act within their respective jurisdictions.

24-Parganas.

No. 1779J.D.—The 3rd June 1905.—In exercise of the power vested in him by section 14, sub-section (1) of the Code of Criminal Procedure, 1898, the Lieutenant-Governor is pleased to confer upon the undermentioned President of panchayat, in the district of Tippera, the powers of a Magistrate under sections 64, 127 and 128 of the same Code, and to declare that the said powers may be exercised by the said officer within the limits of the Union noted against his name.

Tippera.

2. The Lieutenant-Governor is further pleased to declare, in pursuance of sub-section (2) of the said section 14, that the said powers are conferred and may be exercised by the said officer for a period of three years only from the date of this notification :—

Chandpur thana.

Name of President.	Name and No. of Union.
Munshi Abdul Samed Meah	Bishnupore, VII (*a*).

No. 1789J.D.—The 5th June 1905.—In exercise of the power conferred by section 185A, sub-section (1) of the Code of Civil Procedure, the Lieutenant-Governor is pleased to direct that evidence in cases in which an appeal lies shall be taken down by Babu Benode Behari Mitter, Munsif of Narayanganj, in he district of Dacca, with his own hand in the English language.

Dacca.

No. 1793J.D.—The 5th June 1905.—The gentlemen named below, who have been appointed to be Honorary Magistrates of the Independent Bench at Jamalpur, in the district of Monghyr, are vested with the powers of a Magistrate of the third class :—

Monghyr.

Mr. Charles David St. Clair Wedderburn.
" William Bellingham Carter.

ERRATUM

No. 1781J.D.—The 3rd June 1905.—In Notification No. 1143J.D., dated the 13th May 1905, published in Part I, page 890 of the *Calcutta Gazette* of the 17th idem, declaring the periods of sittings at Jalpaiguri of the Additional Subordinate Judge of Rangpur, *for* the words "From 4th August to 23rd September 1905" on the margin *read* "From 14th August to 23rd September 1905."

Rangpur. Jalpaiguri.

H. W. C. CARNDUFF,
Offg. Secy. to the Govt. of Bengal.

ERRATUM.

No. 1786J.D.—The 5th June 1905.—In the Proclamation No. 1247J.D., dated the 18th May 1905, published at page 922, Part I of the *Calcutta Gazette* of the 24th idem, regarding the quartering of an additional police force in the village of Narga within the jurisdiction of the Arwal police station of the district of Gaya, *for* "village Narga" *read* "village Mozuffarpore-Narga." Gaya.

H. W. C. CARNDUFF,
Offg. Secy. to the Govt. of Bengal.

PUBLIC WORKS DEPARTMENT.

ESTABLISHMENT.

The 2nd June 1905.

No. 123.—Mr. A. E. Silk, (Superintending Engineer, class III,) Sanitary Engineer, Bengal, has been granted by His Majesty's Secretary of State for India furlough up to 30th October 1905, in extension of that previously granted.

The 6th June 1905.

No 127.—Mr. Bishan Swarup, Executive Engineer, 3rd grade, temporary rank, Mahanadi Division, is granted privilege leave for one month, under article 260 of the Civil Service Regulations, with effect from the 10th June 1905, or such subsequent date as he may avail himself of it.

W. A. INGLIS,
Secy. to the Govt. of Bengal.

ESTABLISHMENT.

The 3rd June 1905.

No. 125.—Babu Sailendro Nath Banerjee, Apprentice Engineer, is transferred, in the interests of the public service, from the Gandak to the Pusa Division.

M. J. SCOBIE,
Offg. Secy. to the Govt. of Bengal.

IRRIGATION DEPARTMENT.

The 5th June 1905.

No. 15.—Notification.—The Lieutenant-Governor of Bengal is pleased to declare, under the terms of section 6 of Act II (B.C.) of 1882, that the provisions of clause (*b*) of section 76 of that Act shall take effect over the beds and channels of the khals specified below one month after the date of publication of this notification :—

No.	Name of khal.	Portion of khals included.				District.	Approximate length.
		From—		To—			
		Village.	Pargana.	Village.	Pargana.		
1	2	3	4	5	6	7	8
							Mile. Feet.
1	Kanaidighi ...	Kanaidighi ...	Bahirmutha...	Bhaitgarh, 30th mile, Orissa Coast Canal, Range III.	Bhaitgarh	Midnapore ...	1 430
2	Dhoolakooti ...	Panichiari ...	Keoramal Nayabad.	Bhaitgarh, 31st mile, Orissa Coast Canal, Range IV.	Ditto ...	Ditto ...	1 4,574
3	Panichiari ...	Ditto ...	Ditto ...	Panichiari, 32nd mile, Orissa Coast Canal, Range III.	Keoramal Nayabad.	Ditto ...	1 4,365
4	Sukunia ...	Sukunia ...	Narcamutha...	Sukunia, 32nd mile, Orissa Coast Canal, Range III.	Narcamutha...	Ditto ...	0 4,900
5	Damna ...	Panichiari ...	Keoramal Nayabad.	Surpal, 34th mile, Orissa Coast Canal, Range III.	Ditto ...	Ditto ...	2 640
6	Jethaibari ...	Jethaibari	Narcamutha...	Jethaibari, 36th mile, Orissa Coast Canal, Range III.	Ditto ...	Ditto ...	2 1,900
7	Kukurmoondi	Dhamai ...	Keoramal Nayabad.	Tatkapore, 36th mile, Orissa Coast Canal, Range III.	Ditto ...	Ditto ...	2 3,690
8	Taida ...	Banomalichatter.	Majnamutha...	Nilpura, 37th mile, Orissa Coast Canal, Range III.	Ditto ...	Ditto ...	2 2,790
9	Kantiar ...	Mariaai ...	Ditto ...	Tadubi, 40th mile, Orissa Coast Canal, Range III.	Ditto ...	Ditto ...	2 660
10	Kristogaonia	Akandias ...	Ditto ...	Patulia mauza on Contai nala, 41st mile.	Majnamutha	Ditto ...	2 2,640

The 6th June 1905.

No. 16.—Notification.—It is hereby notified for general information that the Lieutenant-Governor of Bengal proposes, under the provisions of sections VI and XI of Act V (B C,) of 1864, to make the following addendum to the schedule of tolls in force on the Calcutta Canals and Tolly's Nala and published in Notification No. 144, dated the 23rd May 1893.

W. A. INGLIS,
Secy. to the Govt. of Bengal.

13.—During neap-tides, when there is not sufficient water in the Tolly's Nala near Russa for the navigation of boats laden with firewood, they will be allowed to proceed to or from the river Biddiadharee through the Circular Canal on payment of a rate of eight annas per 100 maunds of measured maundage for passage through that canal in addition to the rate ordinarily payable for entering or plying in Tolly's Nala.

For purposes of reckoning demurrage charges under item No. 11 of the schedule, two extra days will be allowed over and above those provided for vessels plying on the Tolly's Nala.

Boats plying under this concession will not be allowed either to load or to unload along the Circular Canal or river Hooghly. Infringement of this rule will render the boats liable to the ordinary tolls in force for the Circular Canal.

MARINE DEPARTMENT.

The 3rd June 1905.

No. 62 Marine.—Mr. F. W. Moore, Junior Master Pilot, is granted, under article 676 (*a*) of the Civil Service Regulations, privilege leave for six weeks, with effect from the 24th May 1905.

W. A. INGLIS,
Secy. to the Govt. of Bengal.

PUBLIC WORKS DEPARTMENT.

ESTABLISHMENT.
The 3rd June 1905.

No. 124.—Babu Pramatha Bhusan Roy, Overseer, second grade, is transferred, in the interests of the public service, from the Gandak to the Pusa Division.

M. J. SCORIE,
Offg. Chief Engineer, Bengal.

SUBORDINATE CIVIL SERVICE.

No. 2916A.

No. 1239A.D.—The 31st May 1905.—Babu Bhikari Charan Das, substantive *pro tempore* Sub-Deputy Collector, now employed as Officiating Tahsildar of Government estates Kotdesh, &c., Puri, is allowed leave for one month, under article 260 of the Civil Service Regulations, with effect from the date on which he may avail himself of it.

Puri.

No. 1243A.D.—The 31st May 1905.—Babu Satyendra Nath Batabyal, substantive *pro tempore* Sub-Deputy Collector, Puri, is appointed to act as Tahsildar of Government estates Kotdesh, &c., Puri, during the absence, on leave, of Babu Bhikari Charan Das, or until further orders.

Puri.

No. 1286A.D.—The 2nd June 1905.—Babu Braja Nath Rai, substantive *pro tempore* Sub-Deputy Collector, Chittagong Division, is posted to Sandip, in the district of Noakhali.

Noakhali.

This cancels the order of the 13th May 1905, transferring Babu Bhugobutty Churn Bhuttacharjee, Sub-Deputy Collector, Chandpur, Tippera, to Sandip, in the district of Noakhali.

Tippera.
Noakhali

No. 1288A.D.—The 2nd June 1905.—Babu Rajani Kanta Mukherjee, Sub-Deputy Collector, Sandip, Noakhali, is transferred to the Chittagong Hill Tracts district.

Noakhali.
Chittagong Hill Tracts.

This cancels the order of the 13th May 1905, transferring him to the Chandpur subdivision of the district of Tippera.

Tippera.

No. 1292A.D.—The 2nd June 1905.—Babu Girindro Narain Singh, substantive *pro tempore* Sub-Deputy Collector, Basirhat, 24-Parganas, is transferred to the head-quarters station of the district of Jessore.

24-Parganas. Jessore.

No. 1336A.D.—The 3rd June 1905.—Under the authority vested in him by section 357, sub-section (2), of the Code of Criminal Procedure, Act V of 1898, the Lieutenant-Governor empowers Maulvi Syed Muhammad Abdullah, substa ◇ tive *pro tempore* Sub-Deputy Magistrate, Bhagalpur, to take down evidence in criminal cases in the English language.

Bhagalpur.

No. 1344A.D.—The 3rd June 1905.—Babu Bisseswar Das, Sub-Deputy Collector, Deoghur, Sonthal Parganas, is allowed furlough up to the 10th May 1905, under article 338 of the Civil Service Regulations, in continuation of the combined leave granted to him under the order of the 29th November 1904.

Sonthal Parganas.

Nos. 1371A.D. & 1375A.D.—The 5th June 1905.—The gentlemen named below are appointed substantively *pro tempore* to the fourth grade of Sub-Deputy Collectors and are posted to the Divisions mentioned against their names:—

Maulvi Atai Elahi, B.A.	... ...	Burdwan Division.
Mr. David Macdonald	... ...	Rajshahi ,,

They are also vested with the powers of a Magistrate of the third class.

Nos. 1379—1404A.D.—The 5th June 1905.—The gentlemen named below are appointed substantively *pro tempore* to the fifth grade of Sub-Deputy Collectors and are posted to the Divisions mentioned against their names:—

Babu Nihar Ranjan Banerji, M.A., B.L.	...	Burdwan Division.
Mr. Oliver Godwin Robinson ...	...	Bhagalpur ,,
Maulvi Syed Musi Kazim, M.A. ...	...	Patna ,,
Babu Brajabandhu Bhaumik, B.A. ...	....	Bhagalpur ,,
,, Radha Krishna Basu, M.A. ...	...	Orissa ,,
,, Amal Krishna Mukerji, M.A. ...	...	Burdwan ,,
,, Nand Kishore Jain, B.A. ...	...	Presidency ,,
Maulvi Syed Mohamed Naziruddin, B.A.	...	Patna ,,
Babu Anadi Ranjan Bose, B.A. ...	...	Orissa ,,
,, Prosonno Kamar Ghosal, M.A.	...	Bhagalpur ,,
,, Jogesh Chandra Sen, M.A. ...	...	Dacca ,,
,, Mohini Mohan Senapati, B.A. ...	...	Orissa ,,
,, Jyotish Chandra Maitra, B.A.	...	
Maulvi Syed Ezhar Hassan, B.A. ...	...	Burdwan ,,
,, Mohammad Abdus Salám, B.A.	...	Patna ,,
Babu Abhay Charan De, B.A. ...	...	
,, Susil Kumar Ganguly, B.A. ...	...	Presidency ,,
,, Rajani Kanto Mukhopadhyay, B.A.	...	
,, Radha Charan Dás, B.A. ...	...	Orissa ,,
Maulvi Abul Mahamed Rashad, M.A.	...	Patna ,,
Babu Sasi Bhusan Bhattacharjya, B.A.	...	Presidency ,,
,, Dhirendra Nath Sarkar, B.A. ...	...	Bhagalpur ,,
,, Sati Prasad Ganguli, B.A. ...	...	Presidency ,,
,, Gopinath Dás, B.A. ...	...	Orissa ,,
,, Gopendra Kumar Ghose Chaudhuri, B.A.	...	Rajshahi ,,
,, Prabodh Chandra Majumdar, B.A.	...	Chota Nagpur ,,

They are also vested with the powers of a Magistrate of the third class.

No. 1417A.D.—The 5th June 1905.—Babu Sarat Chunder Chatterjee, Sub-Deputy Collector, now employed as Khas Tahsildar, Chittagong, was on leave for seventeen days, under article 260 of the Civil Service Regulations, with effect from the 4th May 1905.

Chittagong.

No. 1448A.D.—The 6th June 1905.—Mr. W. J. H Ballantine, substantive *pro tempore* Sub-Deputy Collector, Burdwan Division, is posted to the head-quarters station of the Howrah district.

Howrah.

No. 1450A.D.—The 6th June 1905.—Babu Rebati Nath Chatterjee, substantive *pro tempore* Sub-Deputy Collector, Howrah, is transferred to the head-quarters station of the Bankura district.

Howrah. Bankura.

R. W. CARLYLE,
Offg. Chief Secy. to the Govt. of Bengal.

JAIL DEPARTMENT.

No. 6133, dated Calcutta, the 5th June 1905.—Assistant Surgeon Jogendra Nath Ghose made over charge of the Dinajpur Jail to Captain H. B. Foster, I.M.S., on the forenoon of the 26th May 1905.

No. 6255, dated Calcutta, the 6th June 1905.—Deputy Magistrate Maulvi Mahomed Abdul Kadir made over charge of the Krishnagar Jail to Captain A. M'C Kendrick, I.M.S., on the forenoon of the 31st May 1905.

W. J. BUCHANAN,
Inspector-General of Prisons, Bengal.

CIVIL MEDICAL DEPARTMENT, BENGAL.

No. 1032D., dated Darjeeling, the 30th May 1905.—Third-grade Assistant Surgeon Radha Raman Ghosh is appointed as an Additional Demonstrator of Anatomy, Medical College, Calcutta, *vice* third-grade Assistant Surgeon Pasupati Mitra, transferred.

No. 1072D., dated Darjeeling, the 1st June 1905.—Third-grade Assistant Surgeon Benoy Lall Majumdar is appointed to act at the Tangail subdivision in the Mymensingh district, *vice* third-grade Assistant Surgeon Krishna Kisore Chanda, granted leave.

No. 1076D., dated Darjeeling, the 1st June 1905.—Third-grade Assistant Surgeon Krishna Kisore Chanda of the Tangail subdivision in the Mymensingh district is granted privilege leave for three months under Article 260 of Civil Service Regulations, with effect from the date he is relieved of his duties.

S. H. BROWNE, M.D., COL., I.M.S.,
Inspector-General of Civil Hospitals, Bengal.

HIGH COURT NOTICES.

NOTIFCATION.

THE following rule having been framed by the High Court of Judicature at Fort William in Bengal, in the exercise of the powers vested in it by the Statute 24 and 25 Vic. Chapter 104, section 15, and sanctioned by the Governor-General in Council are published for general information.

HIGH COURT;
ENGLISH DEPARTMENT
(CRIMINAL),
The 30th May 1905.

By order of the High Court,
A. P. MUDDIMAN,
Registrar.

(CRIMINAL).

Rule No. of 1905.

The following amendments should be made in the rules regarding copies and the cancellation of Court-fee stamps, reproduced in Chapters IV, VI, VII and X of Volume I, and in the "*Register of Applications for Copies*," reproduced in Volume II of the High Court's General Rules and Circular Orders, Criminal, viz.:—

1. In the fourth line of Rules 17 at page 109, *insert* the words "or typists" after the word "copyists;" and in the third line of the NOTE to that Rule, insert the words "and typists" after the word "copyists."

2. In the sixth line of Rule 18 at page 109, *add* the words "or typist" wherever the word "section-writer" appears in that line.

3. *Cancel* the form of "Copyist's report" in the "FORM OF APPLICATION FOR COPIES" reproduced at page 112 and *substitute* therefor the following:—

Copyist's or Typist's report.

The copy applied for will amount to folios and will require the following:—

	Rs.	A.
stamped sheets each of the value of 3 annas, total		
stamped sheets each of the value of 6 annas, total		
stamped sheets each of the value of 9 annas, total		
Also Court-fee stamps for certified copy		
Also extra Court-fee stamps for urgency		
Also 4 annas Court-fee stamps for searching fee		
TOTAL ...		

Signature of Copyist or Typist
Dated 19

4. In the second line of Rule 4 at page 126, *insert* the word "manuscript" between the words "of" and "copies."

5. After the first paragraph of Rule 5 at page 127, *insert* the following :—

In the case of type-written copies, certified or uncertified, the following uniform charges shall be made, viz. :—

(1) The impressed stamped paper of 3 annas referred to in the preceding paragraph, for copies of documents containing 150 type-written words or less;

(2) The same impressed stamped paper of 3 annas with an adhesive stamp of 3 annas affixed thereto, for copies of documents containing from 151 to 300 type-written words; and

(3) The same impressed stamped paper of 3 annas with an adhesive stamp of 6 annas affixed thereto, for copies of documents containing from 301 to 450 type-written words. These sheets should be used for copies of lengthy documents. For the concluding portion of such documents, the stamped paper (1), (2) or (3) should be used, according to the number of words remaining to be typed.

These charges, it will be seen, correspond exactly with the charges for manuscript copies, viz., 3 annas for a folio of 150 English words. The sheets will be divided into three equal parts by blue lines, each part being intended for 150 type-written words. In the case of the charges (2) and (3) above, the adhesive stamps will be affixed across the perforated line on the top of the sheet of the impressed stamped paper.

6. *Cancel* the second paragraph of Rule 5 at page 127.

7. In the third line of Rule 7 at page 132, *insert* the words "the Court-fee stamps affixed to the folios, together with" after the word "punch."

8. In the first line of Rule 1 at page 229, after the words "copyists" *insert* the words "and typists" and in the sixth line, *insert* the words "or licensed typist" after the words "licensed copyist." At the end of the Rule, *insert* the words—Typists providing their own type-writing machines should be given the preference over copyists when fresh appointments are made.

9. In the first line of Rule 2 at page 220, *insert* the words "and typists" after the word "copyists;" in the third line, *cancel* the word "and;" and in the fourth line, *insert* the words "and of each typist, who provides his own typewriting machine, at least Rs. 50 per month" after the words "per month."

10. In the second line of Rule 4 at page 230, *insert* the words "and adhesive" between the words "impressed" and "stamp"; in the sixth line, *insert* the words "or typists" after the words "licensed copyists;" and in the eleventh line, *insert* the words "or typists" between the words "copyists" and "name." In the first line of NOTE 1 to this Rule, *insert* the words "or typists" after the word "copyist."

11. In the second and sixth lines of Rule 5 at page 230, *insert* the words "or typist's" after the words "copyist's"

12. In the fourth line of Rule 6 at pages 230 and 231, *insert* the words "or typed" after the word "written;" in the seventh line, *insert* the words "or typists" after the word "copyists;" in the eighth line, *insert* the words "or typing" after the word "writing;" and in the tenth line, *insert* the words "or space" after the word "sheet."

13. In the first line of Rule 7 (*a*) at page 231, *insert* the words "and typist" after the words "a copyist" and the words "and typists" after the words "Copyists" appearing in the third and fifth lines.

14. In the first line of Rule 7 (*b*) at page 231, *insert* the words "typist or" between the words "No" and "copyist."

15. *Cancel* columns 7 to 10 of the "*Register of Applications for Copies*" reproduced at page 59 of Volume II, and *substitute* therefor the following :—

NUMBER OF FOLIOS.

FILED WITH APPLICATION.			FILED AFTERWARDS, WITH DATE OF FILING.			USED.			RETURNED UNUSED.		
Of 3 annas.	Of 6 annas.	Of 9 annas.	Of 3 annas.	Of 6 annas.	Of 9 annas.	Of 3 annas.	Of 6 annas.	Of 9 annas.	Of 3 annas.	Of 6 annas.	Of 9 annas.
7	8	9	10	11	12	13	14	15	16	17	18

Re-number columns 11 to 16 as 19 to 24.

NOTIFICATION.

THE following Rule having been framed by the High Court of Judicature at Fort William in Bengal, in the exercise of the powers vested in it by the Statute 24 and 25 Vic., Chapter 104, section 15, and sanctioned by the Governor-General in Council, is published for general information.

HIGH COURT,
ENGLISH DEPARTMENT
(CIVIL),
The 30th May 1905.

By order of the High Court,
A. P. MUDDIMAN,
Registrar.

(CIVIL.)

Rule No. 1905.

THE following amendments should be made in the rules regarding copies and the cancellation of Court-fee stamps, reproduced in Chapters IV, VI, VII and XII of Volume I, and in the "*Register of Applications for Copies*" reproduced in Volume II of the High Court's General Rules and Circular Orders, Civil, viz.:—

1. In the fourth line of Rule 20 at page 102, *insert* the words "or typists" after the word "copyists"; and in the third line of the NOTE to that Rule, *insert* the words "and typists" after the word "copyists."

2. In the sixth line of Rule 21 at page 103, *add* the words "or typist" wherever the word "section-writer" appears in that line.

3. *Cancel* the form of "Copyist's report" in the "*Form of Application for copies*," reproduced at page 106, and *substitute* therefor the following:—

Copyist's or Typist's report:—

The copy applied for will amount to folios and will require the following:—

	Rs.	A.
stamped sheets, each of the value of 3 annas, total		
stamped sheets, each of the value of 6 annas, total		
stamped sheets, each of the value of 9 annas, total		
Also Court-fee stamps for certified copy		
Also extra Court-fee stamps for urgency		
Also 4-anna Court-fee stamps for searching fee		
TOTAL ...		

Signature of Copyist or Typist—
Dated 19 .

4. In the second line of Rule 27 at page 139, *insert* the words "manuscript" between the words "of" and "copies."

5. After the first paragraph of Rule 28 at page 140, *insert* the following:—

In the case of type-written copies, certified or uncertified, the following uniform charges shall be made, viz.—

(1) the impressed stamped paper of 3 annas referred to in the preceding paragraph, for copies of documents containing 150 type-written words or less;

(2) the same impressed stamped paper of 3 annas with an adhesive stamp of 3 annas affixed thereto, for copies of documents containing from 151 to 300 type-written words; and

(3) the same impressed stamped paper of 3 annas with an adhesive stamp of 6 annas affixed thereto, for copies of documents containing from 301 to 450 type-written words. These sheets should be used for copies of lengthy documents. For the concluding portion of such documents, the stamped paper (1), (2) or (3) should be used, according to the number of words remaining to be typed.

These charges, it will be seen, correspond exactly with the charges for manuscript copies, viz., 3 annas for a folio of 150 English words. The sheets will be divided into three equal parts by blue lines, each part being intended for 150 type-written words. In the case of the charges (2) and (3) above, the adhesive stamps will be affixed across the perforated line on the top of the sheet of the impressed stamped paper.

6. *Cancel* the second paragraph of Rule 28 at page 140.

7. In the third line of Rule 8 at page 154, *insert* the words "the Court-fee stamps affixed to the folios, together with" after the word "punch".

8. In the first line of Rule 2 at page 295, after the word "copyists", *insert* the words "and typists," and in the sixth line *insert* the words "or licensed typist" after the words "licensed copyist" At the end of the Rule, *insert* the words—Typists providing their own type-writing machines should be given the preference over copyists, when fresh appointments are made.

9. In the first line of Rule 3 at page 295, *insert* the words "and typists" after the word "copyists"; in the third line *cancel* the word "and"; and in the fourth line *insert* the words "and of each typist, who provides his own type-writing machine, at least Rs. 50 per month" after the words "per month."

10. In the second line of Rule 5 at page 296, *insert* the words "and adhesive" between the words "impressed" and "stamps"; in the sixth line, *insert* the words "or typist" after the words "licensed copyists"; and in the twelfth line, *insert* the words "or typist's" between the words "copyist's" and "name." In the first line of NOTE 1 to this Rule, *insert* the words "or typist" after the word "copyist."

11. In the second and sixth lines of Rule 6 at page 297, *insert* the words "or typist's" after the word "copyist's."

12. In the fourth line of Rule 7 at page 297, *insert* the words "or typed" after the word "written"; in the seventh line, *insert* the words "or typists" after the word "copyists"; in the eighth line, *insert* the words "or typing" after the word "writing"; and in the tenth line, *insert* the words "or space" after the words "each sheet."

13. In the first line of Rule 8 (*a*) at page 297, *insert* the words "and typist" after the words "a copyist" and the words "and typists" after the word "copyists" appearing in the third and fifth lines.

14. In the first line of Rule 8 (*b*) at page 297, *insert* the words "typists or" between the words "No" and "copyist."

15. *Cancel* columns 7 to 10 of the "*Register of Applications for copies*" reproduced at page 89 of Volume II, and *substitute* therefor the following:—

NUMBER OF FOLIOS.											
FILED WITH APPLICATION.			FILED AFTERWARDS, WITH DATE OF FILING.			USED.			RETURNED UNUSED		
Of 3 annas.	Of 6 annas.	Of 9 annas.	Of 3 annas.	Of 6 annas.	Of 9 annas.	Of 3 annas.	Of 6 annas.	Of 9 annas.	Of 3 annas.	Of 6 annas.	Of 9 annas.
7	8	9	10	11	12	13	14	15	16	17	18

Re-number columns 11 to 16 as 19 to 24.

Sheriff's Office, the 31st May 1905.

NOTICE is hereby given that the Third Criminal Sessions of the year 1905 of the High Court of Judicature at Fort William in Bengal, for the Town of Calcutta and Factory of Fort William, and the places subordinate thereto, will be held at the Court-house, in the Town of Calcutta, on Monday, the third day of July next, at 11 o'clock in the forenoon, and thenceforward from day to day until the said Sessions be over. And it is hereby proclaimed that all persons who are to prosecute any of the prisoners to be brought up for trial at the said Sessions be present then and there to prosecute.

E. CABLE, *Sheriff.*

সরিফ আফিস, সন ১৯০৫ সাল তারিখ ৩১শে মে।

সকলকে সমাচার দেওয়া যাইতেছে যে যুবে বাঙ্গালার কোর্ট উইলিয়ম দুর্গের অধীন শহর কলিকাতার ও অন্যান্য স্থানের ফৌজদারী বিচার নিষ্পত্তি জন্য আগামী সন ১৯০৫ সালের ৩রা জুলাই সোমবার বেলা ১১ ঘটিকার সময় এবং যে পর্য্যন্ত সেশিয়ানের কার্য্য শেষ না হয় প্রতিদিন উক্ত সময়ে কলিকাতার হাইকোর্টের আপন আদালত ঘরে সন ১৯০৫ সালের তৃতীয় ক্রিমিনেল সেশিয়ান বসিবেক এবং এতদ্দ্বারা প্রচার করা যাইতেছে যে, যে সকল ব্যক্তি কোন কয়েদির বিরুদ্ধে ফৌজদারী মিছিল করিবেক তাহারা উক্ত স্থানে উক্ত সময়ে হাজির থাকিয়া মোকদ্দমা করে ইতি।

ই: কেবল, সরিফ।

EDUCATION DEPARTMENT, BENGAL.

Subordinate Educational Service.

The 27th May 1905.—Mr. B. Kenneth Evans is appointed, on probation for six months to be Foreman Instructor in the Ahsanulla School of Engineering at Dacca and substantively *pro tempore* to class III of the Subordinate Educational Service in the resulting vacancy arising from the retirement of Babu Hari Charan Nag.

Babu Samares Rai Chaudhuri, B.E., is appointed, on probation for one year, to be an Assistant Master in the Ahsanulla School of Engineering at Dacca and substantively *pro tempore* to class V of the Subordinate Educational Service.

The 28th May 1905.—Babu Bhairab Sahai, Sub-Inspector of Schools, Shahabad (class VI), has been allowed by the District Board of Shahabad combined leave for seven months, under article 232 of the Civil Service Regulations, viz., leave for two months under article 260 of the Civil Service Regulations, to be prefixed to leave for five months under article 338 of the Civil Service Regulations, with effect from the date on which he may avail himself of it.

The 1st June 1905.—Babu Kumudeswar Bose, Sub-Inspector of Schools, Noakhali (class VII), is allowed by the District Board of Noakhali leave of absence for two months, under article 260 of the Civil Service Regulations, with effect from the 20th May 1905.

The 3rd June 1905.—Babu Lokenath Patnaik, B.A., Sub-Inspector of Schools, Boad and Athmalik Circle, Orissa Tributary Mahals, on probation (substantively *pro tempore* in class VIII of the Subordinate Educational Service), is allowed leave of absence for one month, under article 260 of the Civil Service Regulations, with effect from the 23rd June 1905, or such subsequent date as he may avail himself of it.

V. H. JACKSON,

Asst. Director of Public Instruction, Bengal, in charge

ORDERS BY THE VICE-CHANCELLOR AND SYNDICATE OF THE CALCUTTA UNIVERSITY.

THE undermentioned candidates have passed the First Examination in Engineering, 1905:—

SECOND DIVISION.

In order of merit.

1.	Sen, Pannalal	...	Civil Engineering College.
2.	Ray, Saradindu	...	Ditto.
3.	Malefski, B.	...	Ditto.
4.	Mukhopadhyay, Manmathanath	...	Ditto.
5.	Gangopadhyay, Sitakanta	...	Ditto.
6.	Mukhopadhyay, Jitendranath	...	Ditto.
7.	Gangopadhyay, Manomohan	...	Ditto.
8.	Bhattacharyya, Indusekhar	...	Ditto.
9.	De, Ramanmani	...	Ditto.
10.	Datta, Sarajkumar	...	Ditto.
11.	Saha, Satischandra	...	Ditto.
12.	Dattagupta, Jogeschandra	...	Ditto.
13.	Rakshit, Amarendranath	...	Ditto.
14.	Barboza, P. H.	...	Ditto.
15.	Dasgupta, Jitendranath	...	Ditto.
16.	Gupta, Manohar	...	Ditto.

SENATE HOUSE,
The 5th June 1905.

K. C. BANURJI,
Registrar.

SIVANANDANPRASAD SINHA, Gaya Town School, whose name appears in the *Second Division* list of the Entrance Examination in the *Gazette* of May 24th, page 939, has passed in the *Third Division*.

SENATE HOUSE,
The 3rd June 1905.

K. C. BANURJI,
Registrar.

EDUCATIONAL.

Pleadership and Mukhtarship Examinations.

THE following is a list of candidates who have passed the Pleadership Examination held on the 8th, 9th and 10th March 1905 :—

3. Fiaz Ahmad.*
10. Asutosh Ghosh.
11. Kamini Kumar Biswas.
13. Radha Charan Karmakar.
14. Aswini Kumar Mitra.
17. Radha Raman Ghosh.
18. Sita Nath Bhattacharyya.
23. Kedar Nath Sen Gupta.
29. Tarakeswar Bhattacharyya.
32. Prahlad Chandra Sadkhel.
36. Surendra Nath Mukhopadhyaya.
40. Asutosh Gangopadhyay.
42. Surendra Nath Roy.
43. Bagala Prasanna Mukhopadhyay.
45. Guru Prasanna Chaudhuri.
48. Chandra Kumar Chaudhuri.
51. Abinash Chandra Sinha.
52. Indu Bhushan Mitra Mustafi.
58. Manindra Nath Ganguli.
60. Sudhadhar Jha.
62. Raghunandan Das.
64. Baneswar Prasad Tewari.
84. Panchanan Roy.
86. Prayag Krishna Dutta.*
88. Tara Nath Bhattacharyya.*
93. Kisori Mohan De.
94. Nabin Chandra Chaudhuri.
101. Nisi Chandra Pal.
103. Bansi Badan Nath.
104. Jogindra Lal Das.
106. Syama Charan Sarkar.
108. Barada Kumar Biswas.
110. Krishna Kumar Chaudhuri.
113. Nisi Chandra Majumdar.
116. Asad Ali.
122. Prabodh Chandra Sarkar.
126. Rebati Kanta Ghosh.
127. Jagadanand Das.
129. Dolgobinda Basu.
130. Radha Krishna Kanango.
133. Gouranga Hari Dhar.
136. Birendra Nath Basu.
137. Hara Chandra Pal.
142. Asvini Kumar Dutta.
144. Harendra Kumar Chakrabarti.
150. Jatindra Mohan Das.
152. Hari Mohan De.
155. Radha Kanta Banik.
156. Asutosh Das Gupta.
157. Bana Bihari Saha.
164. Nityananda Datta.
166. Pratap Chandra Gupta.
168. Atul Chandra Chakrabarti.
169. Rajendra Kumar Ghosh.
173. Rohini Kumar Mukherji.
177. Naresh Chandra Banerji.
179. Hiranmay Chakrabarti.
180. Rebati Mohan Ghosh.
192. Kamala Kanta Datta.
196. Digindra Prasad Ghosh.
198. Tara Nath Roy.
199. Madhab Chandra Sikdar.
200. Jnanendra Chandra Das Gupta.
203. Sarat Chandra Chakrabarti.
205. Jnanendra Nath Lahiri.
206. Tara Prasanna Das.
210. Tarak Chandra Chatterji.
213. Mahabir Prasad.
217. Syed Husan Askari.
221. Banka Bihari Misra.
222. Bangali Rama.
224. Indu Bhushan Bandyopadhyay.
226. Amulya Chandra Ganguli.
227. Nanda Lal Chatterji.
229. Jamini Mohan Chatterji.
233. Sriram Chandra Laha.
237. Baidya Nath Chakrabarti.
238. Sayyed Sultan Ali.
246. Binod Bihari Bandyopadhyay.
253. Man Mohan Das Gupta.
255. Rama Nath Banerji.
259. Harendra Krishna Sarkar.
260. Nagendra Nath Basu.
262. Surendra Nath Gangopadhyay.
266. Pratap Chandra Mandal.
267. Purna Chandra Chaudhuri.
273. Rajani Kanta Bandyopadhyay.
275. Ambika Charan Pal.
277. Hari Mohan Chakrabarti.
278. Manmatha Nath Sen.
283. Pramatha Nath Ghosh.
284. Trailokya Nath Maity.
285. Chandra Mohan Maity.
296. Tinkari Santra.
302. Saradindu Ganguli.
303. Jugal Kisor Hor.
321. Krishna Chandra Chakrabarti.
323. Uma Nath Roy.
324. Giris Chandra Sen.
336. Rajani Nath Chaudhuri.
337. Chandra Kumar Biswas.
347. Jogendra Nath Majumdar.
352. Bhuban Mohan Mukherji.
357. Gopal Chandra Nag.
370. Satya Charan Sarkar.
372. Guru Charan Sinha.
373. Fatah Narayan Sinha.
375. Ram Charan Lal.
377. Muhammad Abdul Karim.
378. Abrar Ahmad Siddiqi.
379. M. Nurul Hoda.
387. Ramanand Prasad.
398. Nalini Mohan Chaudhuri.
399. Abdul Hayat Tarafdar.
404. Tara Prasanna Lahiri.
411. Rebati Kanta Ghosh.
423. Akshay Chandra Kosr.
426. Kumud Nath Datta.
429. Bhabataran Talapatra.
430. Mahendra Nath Bhattacharyya.
437. Hafizuddin Khandkar.
438. Biswoswar Roy.
446. Sarat Chandra Roy.
448. Purna Chandra Sarkar.
454. Sures Chandra Chakrabarti.
455. Muhammad Halim Raza.
456. Pande Sri Nath Prasad.
457. Gunraj Sinha.
459. Bindeswari Saran.
460. Bindeswari Dut Sukul.
467. Chandi Misra.
469. Abdul Rahman.
470. Babu Lal.
477. Karamat Husain.

480. Ram Sarup Lal.
483. Syed Atayet Ahmad.
485. Bhabani Kanta Bandyopadhyay.
486. Bhanu Prakas.
490. Kalijay Bhattacharyya.*
495. Nabin Chandra Pal.*
497. Durgadas Chakrabarti.*
502. Krishna Kumar De.*
504. Sarat Chandra De.*
512. Gakul Chandra Pal.
513. Ananda Chandra Das.
515. Rajani Kumar Nandi.
517. Mano Mohan Chaudhuri.
518. Joges Chandra Datta.
521. Kshirod Chandra Datta.
523. Susil Chandra Chaudhuri.
524. Kamala Kanta Banik.
525. Ananda Mohan Gupta.
527. Jay Kumar Kar.
528. Kshirod Chandra Nath.
529. Jagadis Chandra Ghosh.
530. Durga Nath Bhattacharyya.
533. Bhagaban Chandra Das.
535. Rames Chandra Banerji.
538. Ramdhani Singh.
540. Bhubaneswar Prasad.
542. Buni Lal Das.
544. Purandar Jha.
545. Arikshan Sinha.
546. Baranasi Lal.
550. Hira Lal Mitra.
556. Mohini Mohan Mukherji.
558. Annada Prasad Sur.
560. Sriranjan Chattoraj.
561. Surendra Nath Biswas.
573. Rama Prasad Mukherji.
574. Kedar Nath Das.
578. Abdur Rashid.
581. Debi Prasad Banerji.
582. Gobardhan Adhya.
585. Akhil Chandra Saha.
589. Nibaran Chandra Ghosh.
600. Prabhat Ranjan Mitra.
606. Braja Mohan Sardar.
609. Anukul Chandra Chatterji.
611. Manindra Nath Sarkar.
615. Debendra Narayan Guha.
620. Phani Bhushan Sen.
621. Harendra Kumar Ghosh.
629. Sures Chandra Das.
631. Dhirendra Nath Ghosh.
644. Sasi Bhushan Bandyopadhyay.
645. Joges Chandra Bandyopadhyay.

NOTE.—Candidates marked * are allowed to practise only in districts under the Chief Commissioner of Assam.

WILLIAM GRAHAM,
Secretary to the Pleadership and Mooktarship Examintion Board.

CALCUTTA UNIVERSITY.

CIRCULAR.

THE attention of Heads of Colleges and Inspectors of Schools is drawn to the terms of section 19 of the Indian Universities Act (VIII of 1904):—

"Save on the recommendation of the Syndicate, by special order of the Senate, and subject to any regulations made in this behalf, no person shall be admitted as a candidate at any University examination other than an examination for Matriculation, unless he produces a certificate from a College affiliated to the University to the effect that he has completed the course of instruction prescribed by regulation" (Act VIII of 1904, section 19).

SENATE HOUSE,
The 31st May 1905.

K. C. BANURJI,
Registrar.

SANSKRIT FIRST EXAMINATION, 1905.

THE undermentioned candidates have passed the Sanskrit First Examination held in the year 1905:—

Name of successful candidate.	Name of teacher.	Place of tôl.
1	2	3

(In alphabetical order.)

CALCUTTA PANDIT SÂBHA.

GRAMMAR.

FIRST DIVISION.

Acharyya, Satya Charan ...	Kesab Chandra Ayurvedi ...	Bhawanipur.
Bandyopadhyaya, Bholanath ...	Government Sanskrit College, Title Class.	Calcutta.
" Sibaram ...	Government Sanskrit Collegiate School, 5th class.	
Bhadra, Charu Chandra ...	Ramgopal Smritiratna ...	Korarbagan, Howrah.
Bhattacharyaya, Baidyanath ...	Bhudeb Smritiratna ...	Talandoo, Hooghly.
" Giridhar ...	Government Sanskrit College, Title Class.	Calcutta.
" Jnanendra Nath.	Beepinvihari Smritiranjan ...	Lakshin Betra, Howrah.
" Kedar Nath ...	Pelaram Vidyaratna ...	Karkai, Midnapur.
" Kesab Chandra	Sanskrit College, Title Class ...	Calcutta.
" Krishna Prasanna	Taraprasanna Smritiratna ...	Prasanna Kumar Thakur's Street, Pathuriaghata, Calcutta
" Nilratna ...	Amarnath Vidyavinode ...	41, Bagbazar Street, Calcutta.
" Rajendra Nath...	Kesab Chandra Ayurvedi ...	Bhawanipur.
" Rampada ...	Sanskrit College, Title Class ...	Calcutta.
" Surendra Kumar	Bisweswar Smrititirtha ...	Paglasamanagar, Khulna.
" Tarak Nath ...	Bhubaneswar Vidyalankar ...	23, Ramkanta Basu's 2nd Lane, Calcutta.
" Uma Charan ...	Vanamali Vedantatirtha, M.A. ...	10-4, Musalmanpara Lane, Calcutta.
Chakravarti, Bijaya Nath ...	Sriram Sastri ...	13, Balaram Ghoshe's Street, Calcutta.
" Manmatha Nath ...	Sanskrit Collegiate School, 5th class	Calcutta.
Ghosh, Asutosh	Kesab Chandra Ayurvedi ...	Bhawanipur.
" Bhabendrakumar ...	Syama Charan Vidyaratna ...	Kaikala, Hooghly.
Gupta, Krishna Kanta Sen ...	Sanskrit College, Title Class ...	Calcutta.
" Sasankaranjan Sen ...	Sitanath Kaviratna ...	Kumarkhali, Nadia.
Mukhopadhyaya, Durgapada ...	Haran Chandra Kavyatirtha ...	Barisa, 24-Parganas.
Sarma, Bansidhar ...	Yogi Jha	Bisuddhananda Vidyalaya, Calcutta.
" Lakshminarayan ...	Ditto	Ditto.

GRAMMAR.

SECOND DIVISION.

Acharyya, Rakhaldas ...	Bhabataran Vidyaratna ...	25, Vidyasagar's Street, Calcutta.
" Sivalabh ...	Raghu Nath Misra ...	Rakshini tôl, Narasing Garh, Singhbhum.
Bairagi, Narendra Krishna ...	Sanskrit Collegiate School, 5th class	Calcutta.
Bandyopadhyaya, Baidya Nath ...	Haran Chandra Kavyatirtha ...	Barisa, 24-Parganas.
" Jitendra Nath	Sanskrit Collegiate School, 5th class	Calcutta.

Name of successful candidate.	Name of teacher.	Place of tôl.
1	2	3

CALCUTTA PANDIT SABHA—*continued.*

GRAMMAR—*continued.*

SECOND DIVISION—*continued.*

Bhattacharyya, Amritaharo .	Devi Prasanna Smriti Bhusan ...	Belpukuria.
,, Annada Prasad ...	Haranath Sastri	25, Raja Navakrishna's Street, Calcutta.
,, Aparna Charan ...	Sanskrit Collegiate School, 5th class	Calcutta.
,, Bijaya Krishna ...	Sriram Sastri	13, Balaram Ghoshe's Street, Calcutta.
,, Balaram ...	Sanskrit Collegiate School, 5th class	Calcutta.
,, Bama Charan ...	Ditto do.	Ditto.
,, Chintaharan ...	Ambica Charan Smrititirtha ...	Rishra, Hooghly.
,, Gopal Krishna ..	Sanskrit Collegiate School, 5th class	Calcutta.
,, Jahnabi Charan ...	Gopal Das Sastri	Nager Bazar, Dun Dan, 24-Parganas.
,, Jivan Krishna ...	Uma Charan Tarkaratna ...	56-3, Gray Street, Calcutta.
,, Krishna Chandra	Asutosh Vidyabhushan ...	Bharati Chatushpatti, Doctor's Lane, Calcutta.
,, Lalit Mohan ...	Sanskrit Collegiate School, 5th class	Calcutta.
,, Manmatha Nath	Kedar Nath Smritiratna ...	Balegari, Tarkeswar.
,, Murari Mohan ...	Janaki Nath Tarkaratna ...	Karkai, Midnapore.
,, Narottam ...	Bireswar Tarkatirtha ...	Baidyapur, Burdwan.
,, Phani Bhushan ...	Asutosh Vidyabhushan ...	Barati Chaturpati, Doctor's Lane, Calcutta.
,, Phanindra Nath	Mahendra Nath Kaviratna ...	Mauri, Howrah.
,, Ramananda ...	Abhaya Pada Smrititirtha ...	Sanapara, Sibpur, Howrah.
,, Srikrishna ...	Sriram Sastri	13, Balaram Ghoshe's Street, Calcutta.
,, Surendra Nath ...	Devendra Nath Smritibhushan ...	Ramkrishnapur, Howrah.
Chakravarti, Anukul Chandra ...	Amarnath Vidyavinode ...	41, Bagbazar Street, Calcutta.
,, Krishnaprasad ...	Yogi Jha	Bisuddhananda Vidyalaya, Calcutta.
,, Manimohan ...	Sanskrit College, School, 4th class	Calcutta.
,, Norendra Nath ...	Gokul Chandra Bhattacharyya ...	Madhya Hijila, Hooghly.
,, Panchanan ...	Sanskrit College, Title Class ...	Calcutta.
,, Rajani Kanta ...	Chintamani Kavyatirtha ...	Hazrapata, Midnapore.
,, Sripati Charan ...	Sanskrit College, Title Class ...	Calcutta.
Chattopadhyaya, Harisatya ...	Abhayapada Smrititirtha ...	Sonapara, Sibpur, Howrah.
Das, Vanamali	Bhubaneswar Vidyalankar ...	23, Ramkanta Basu's 2nd Lane, Calcutta.
Ghatak, Haripada	Bireswar Tarkatirtha ...	Baidyapur, Burdwan.
,, Nepal Chandra ...	Uma Charan Tarkaratna ...	56-3, Gray Street, Calcutta.
Ghoshal, Surendra Nath ...	Haran Chandra Kavyatirtha ...	Barisa, 24-Parganas.
Gupta, Jyotish Chandra Son ...	Sanskrit College, Title Class ...	Calcutta.
,, Susilananda ...	Asutosh Kavyatirtha ...	Nalia, Bogra.
Jha, Balkrishna	Yogi Jha	Bisuddhananda Vidyalaya, Calcutta.

Name of successful candidate.	Name of teachers.	Place of tól.
1	2	3

CALCUTTA PANDIT SABHA—*concluded.*

GRAMMAR *concluded.*

SECOND DIVISION—*concluded.*

Jhulaki, Kunj Vehari ...	Chintamani Kavytirtha ...	Hazarapota, Midnapore.
Misra, Dinabandhu	Raghunath Misra ...	Rakshini tól, Narsingarh, Singhbhum.
,, Kshetra Moban ...	Ditto	Ditto.
,, Paneswar	Ditto	Ditto.
Mukhopadhyaya, Manuja Mohan	Sanskrit Collegiate School, 5th class	Calcutta.
,, Tulsi Charan ...	Tarapada Nyayaratna ...	Baidyabati, Hooghly.
Ray, Yadu Nath	Kesab Chandra Bhattacharyya ...	Harmasra, Bankura.
Sanyal, Dhirendra Nath ...	Sanskrit Collegiate School, 5th class	Calcutta.
Sarma, Gajanan	Yogi Jha	Bisuddhananda Vidyalaya, Mulajore.

KAVYA.

FIRST DIVISION.

Bhattacharyya, Harimohan ...	Sanskrit Collegiate School, 4th class	Calcutta.
Chattopadhyaya, Phanibhushan ...	Ditto do.	Ditto.
Dwivedi, Kailas Chandra ...	Yogi Jha	Bisuddhananda Vidyalaya, Harrison Road, Calcutta.

SECOND DIVISION.

Bandyopadhyaya, Bhabanath ...	Madan Mohan Kavyatirtha ...	Kumira, Jessore.
,, Amrityuhari ...	Deviprasanna Smritibhushan ...	Belpukur.
Bhattacharyya, Chandra Kumar	Durga Charan Vidantatirtha ...	Bhagvat Chatuspathi, Bhowanipur.
,, Haripada ...	Sanskrit Collegiate School, 3rd class	Calcutta.
Chakravarti, Chandi Charan ...	Taraprasanna Smritiratna ...	26, Prasanna Kumar Tagore's Street, Pathuriaghata.
,, Yatindranath ...	Devendranath Smritibhushan ...	Ramkrishnapur, Howrah.
Gupta, Haridas Sen ...	Sanskrit Collegiate School, 4th class	Calcutta.
,, Nirmal Chandra ...	Ditto	Ditto.
Thakur, Yamini Kanta ...	Yajneswar Vidantabhushan ...	Konnagor, Hooghly.

SMRITI.

FIRST DIVISION.

Vyakarantirtha, Syama Charan ...	Haridas Vidyaratna ...	Uttarpara.

SECOND DIVISION.

Bhattacharyya, Asutosh ...	Harachandra Tarkapanchanan ...	26, Prasanna Kumar Tagore's Street, Pathuriaghata.
,, Kamini Nath ...	Kailas Chandra Smritiratna ...	16, Sivanarayan Das's Lane.
,, Rakhaldas ...	Prasanna Kumar Smrititirtha ...	Balli.
Chakravarti, Kamini Kumar ...	Haridas Vidyaratna ...	Uttarpara.

NYAYA.

FIRST DIVISION.

Bhattacharyya, Nepal Chandra ...	Bireswar Tarkatirtha ...	Baidyapur, Burdwan.

PURAN.

SECOND DIVISION.

Bhattacharyya, Pratap Chandra *alias* Upendranath.	Bhubaneswar Vidyalankar ...	13, Ramkanta Bosu's Street, Calcutta.
,, Raj Kumar ...	Ditto	Ditto.

Name of successful candidate.	Name of teacher.	Place of tól.
1	2	3

CALCUTTA PANDIT SABHA—*concluded.*

MIMANSA.

DIVISION II.

Jha, Radhaprasad	Yogi Jha	Bisuddhanandavidyalaya, Harrison Road, Calcutta.

BHATPARA PARIKSHA SABHA.

GRAMMAR.

FIRST DIVISION.

Bhattacharyya, Krishnagopal ...	Ramanuja Vidyarnava ...	Bhatpara.

SECOND DIVISION.

Bhattacharyya, Balaram ...	Kasinath Vachaspati ...	Bhatpara.
,, Chaitannya Charan	Kamal Krishna Smritibhushan ...	Ditto.
,, Haraprasad ...	Kasinath Vachaspati ...	Ditto.
,, Kshetranath ...	Ditto ...	Ditto.
Chakravarti, Harimohan ...	Saradacharan Smritibhushan ...	Sanskrit, College Mulajore.
,, Lakshmi Kanta ...	Haranath Sastri	25, Raja Navakrishna's Street, Calcutta.
Chattopadhyaya, Surendranath	Saradacharan Smritibhushan ...	Sanskrit College, Mulajore.
Gupta, Nagendra Nath ...	Ditto ...	Ditto.
,, Sarat Chandra Das ...	Purna Chandra Smritikantha ...	Nurpur, Faridpur.
Ray, Sarveswar	Prahlad Chandra Tarkaratna ...	Sodepur, Burdwan.

KAVYA.

FIRST DIVISION.

Bhattacharyya, Panchanan ...	Kasinath Vachaspati ...	Bhatpara.
,, Sivaprasad ...	Bireswar Smrititirtha ...	Ditto.
Ray, Ramanath	Prahlad Chandra Tarkaratna ...	Sodepur, Burdwan.
Sarkar, Ramchandra ...	Gopal Chandra Kavyatirtha ...	Pabna.

SECOND DIVISION.

Bhattacharyya, Dakshina Charan	Gopal Chandra Kavyatirtha ...	Pabna.
,, Dhirendra Nath ...	Kasinath Vachaspati ...	Bhatpara.
,, Indubhushan ...	Ditto ...	Ditto.
,, Prabhat Chandra	Ditto ...	Ditto.
,, Nibaran Chandra	Ditto ...	Ditto.
,, Ramchandra ...	Suryya Kumar Tarkabhushan ...	Sanskrit College, Mulajore.
,, Yogesachandra ...	Prahlad Chandra Tarkaratna ...	Sodepur, Burdwan.
Chaudhuri, Jagatbandhu ...	Yadab Chandra Smritiratna ...	Hooghly.
Das, Bijaya Chandra ...	Gopal Chandra Kavyatirtha ...	Pabna.
Gupta, Sris Chandra ...	Surya Kumar Tarkabhushan ...	Sanskrit College, Mulajore.

SMRITI.

SECOND DIVISION.

Bhattacharyya, Dasarathi ...	Yadav Chandra Smritiratna ...	Hooghly.
,, Navakumar ...	Bireswar Smrititirtha ...	Bhatpara.

VEDANTA.

SECOND DIVISION.

Bhattacharyya, Satis Chandra ...	Kasinath Vachaspati ...	Bhatpara.

UPANISHAD.

SECOND DIVISION.

Bhattacharyya, Achintarup ...	Kasinath Vachaspati ...	Bhatpara.

Name of successful candidate.	Name of teacher.	Place of tôl.
1	2	3

BIBUDHA JANANI SABHA, NAVADWIP CENTRE.

GRAMMAR.

First Division.

Bhaduri, Jagat Chandra ...	Akshay Kumar Kavyaratna ...	Mirzapur Digha, Rajshahi.
Bhattacharyya, Baman Das ...	Mrityunjay Smrititirtha ...	Goari, Nadia.
„ Nagendra Nath ...	Akshay Kumar Kavyaratna ...	Mirzapur Digha, Rajshahi.
„ Tripurari ...	Yadu Nath Vidyaratna ...	Purvasthali, Burdwan.
Chakravarti, Yoges Chandra ...	Akshay Kumar Kavyaratna ...	Mirzapur Digha, Rajshahi.

Second Division.

Acharyya, Mano Mohan ...	Debendra Nath Smritiratna ...	Samudragarh, Burdwan.
Bandyopadhyaya, Bharat Chandra	Rakhalananda Thakur ...	Srikhanda, Burdwan.
Bhattacharyya, Ram Lal ...	Akshay Kumar Kavyaratna ...	Mirzapur Digha, Rajshahi.
„ Rampada ...	Devendra Nath Smritiratna ...	Samudragarh, Burdwan.
Chakravarti, Prabodh Kumar ...	Devendra Nath Smritiratna ...	Ditto.
„ Pramatha Nath ...	Akshaya Kumar Kavyaratna ...	Mirzapur Digha, Rajshahi.
Das, Gopi Nath ...	Ram Kanta Vyakarantirtha ...	Chaitanya Chatuspathi, Navadwip.
Goswami, Mohini Mohan ...	Ditto ...	Ditto.
„ Siti Kanth ...	Ditto ...	Ditto.
„ Siva Ram ...	Rakhalananda Thakur ...	Srikhanda, Burdwan.
Gupta, Basanta Kumar ...	Yogindra Nath Smrititirtha ...	Navadwip, Nadia.
Misra, Dinabandhu ...	Ram Kanta Vyakarantirtha ...	Chaitanya Chatuspathi, Navadwip.
Ray, Annada Prasad ...	Madhav Chandra Bhagvatratna...	Navadwip.

KAVYA.

First Division.

Bhattacharyya, Purna Chandra ...	Kailas Chandra Kavyatirtha ...	Navadwip, Nadia.

Second Division.

Bhattacharyya, Hansa Nath ...	Yadu Nath Vidyaratna ...	Purvasthali, Burdwan.
„ Yatindra Nath ...	Ditto ...	Ditto.
Mukhopadhyaya, Sasi Sekhar ...	Mrityunjoya Smrititirtha ...	Goari.
Ray, Niranka Chandra ...	Yadu Nath Vidyaratna ...	Purvasthali, Burdwan.

NYAYA.

Second Division.

Bhattacharyya, Surendra Nath ...	Bisweswar Tarkaratna ...	Chaitanya Chatuspathi, Navadwip.
„ Yatindra Nath ...	M. M. Raj Krishna Tarkapanchanan.	Navadwip.

PURAN.

First Division.

Bhattacharyya, Jiban Krishna ...	Tarapada Smrititirtha ...	Samudragarh, Burdwan.

MIMANSA.

Second Division.

Pathak, Haridas ...	Yogendra Nath Smrititirtha ...	Chaitanya Chatuspathi, Navadwip.

Name of successful candidate.	Name of Teacher.	Place of tól.
1	2	3

GHATAL SANSKRIT SAMITI.

GRAMMAR.

First Division.

Acharyya, Barada Kanta ...	Sripati Charan Kavyatirtha ...	Panchisbatiya, Midnapore.
Bhattacharyya, Ananda Mohan ...	Rajani Kanta Smrititirtha ...	Irpala, Midnapore.
„ Avinas Chandra ...	Upendra Nath Vidyaratna ...	Tutranga, Midnapore.
„ Bhupati Charan ...	Ditto ...	Ditto.
Das, Kamini Kumar ...	Rajani Kanta Smrititirtha ...	Irpala, Midnapore.
Mukhopadhyaya, Govinda Nanda.	Umesa Chandra Vidyabhushan ...	Sunyakone.
„ Devendra Nath.	Yadunath Kavyatirtha ...	Nilda, Midnapore.
„ Sripati Charan...	Baradakanta Nanda ...	Kesaidighi.
Tripathi, Mrityunjoyar ...	Ditto ...	Ditto.

Second Division.

Acharyya, Mrityunjoya ...	Barada Kanta Nanda ...	Kesaidighi.
„ Sivadatta ...	Purushottam Vidyanidhi ...	Balyabera.
Bandyopadhyaya, Nani Gopal ...	Giris Chandra Vidyaratna ...	Gopalnagar.
„ Nilmadhav ...	Umesa Chandra Vidyabhushan ...	Sunyakone.
Battacharyya, Amrita Mohan ...	Ditto ...	Ditto.
„ Asutosh ...	Kusadhwaja Smritiratna ...	Tilda.
„ Bidhu Bhushan ...	Umesa Chandra Vidyabhushan	Sunyakone.
„ Bhuban Chandra	Abinas Chandra Kavyatirtha ...	Manikyaram Chatuspathi, Midnapore.
„ Giris Chandra ...	Aghore Nath Kavyabhushan ...	Kalagachia.
„ Hemtaran ...	Rameswar Vidyaratna ...	Antola.
„ Hrishekesa ...	Pasupati Smritiratna ...	Bona.
„ Kali Nath ...	Kusadhwaja Smritiratna ...	Tilda.
„ Kalipada ...	Maheswar Nyayaratna ...	Bhogdutta, Midnapore.
„ Nagendra Nath ...	Srinath Smritiratna ...	Kisorepur, Midnapore.
„ Narayan Chandra	Giris Chandra Vidyaratna ...	Gopalnagar.
„ Pramatha Nath ...	Nilkanta Nyayabhushan ...	Bhemua.
„ Rajani Kanta ...	Rameswar Vidyaratna ...	Antola, Midnapore.
„ Tarendra Nath ...	Upendra Nath Vidyaratna ...	Tootranga.
Chakravarti, Asutosh ...	Karali Charan Vidyaratna ...	Pipurda.
„ Asutosh ...	Sripati Charan Bhattacharyya ...	Gopinathpur, Midnapore.
„ Khirode Kumar ...	Aghore Nath Kavyabhushan ...	Kalagachia, Midnapore.
„ Makham Lal ...	Ramanga Kavyatirtha ...	Jhikhira.
„ Manmatha Nath ...	Ditto ...	Ditto.
„ Upendra Nath ...	Raghu Nath Smritibhushan ...	Bhandarberia.
Chaudhuri, Pramathanath ...	Lambodar Kavyatirtha ...	Basantia.
Das, Kali Prasanna ...	Pitambar Siromani ...	Benapur.
„ Kumar Narayan ...	Divakar Vedantapanchanah ...	Contai.
Goswami, Trailokyanath ...	Prasanna Kumar Kavyatirtha ...	Ranisahi, Midnapore.
Gangopadhyaya, Narendra Nath	Benode Vehari Vidyaratna ...	Helan.
Hota, Trailokya Nath ...	Purushottam Vidyanidhi ...	Bellyabera.
Mahapatra, Priyadarsan ...	Sripati Charan Kavyatirtha ...	Panchisbatiya, Midnapore.
Misra, Ambika Charan ...	Srinath Siromani ...	Gopinathpur, Midnapore.
„ Bhagwan Chandra ...	Narayan Chandra Smarthavagisa	Jhawagovinda, Berabar.
„ Jagannath ...	Chandramohan Chudamani ...	Madhukhali, Midnapore.
„ Jitnarayan ...	Sripati Charan Kavyatirtha ...	Panchisbatiya, Midnapore.
„ Syama Charan ...	Sagar Chandra Kaviratna ...	Kakhorda.

Name of successful candidate.	Name of teacher.	Place of tôl.
1	2	3

GHATAL SANSKRIT SAMITI—*concluded.*

GRAMMAR—*concluded.*

SECOND DIVISION—*concluded.*

Misra, Upendranath ...	Satrughna Vidyaratna ...	Mahajan, Midnapore.
„ Yatindramohan ...	Kusadhevaja Smritiratna ...	Tilda.
Mukhopadhyaya, Gurudas ...	Ramnarayan Smritiratna ...	Desrah, Bankura.
„ Munindranath ...	Abinas Chandra Vidyanidhi ...	Dandipur, Midnapore.
Nanda, Chandika Prasanna ...	Ramnarayan Tarkalankar ...	Lalpur, Midnapore.
Pahari, Dinanath ...	Aghorenath Kavyabhushan ...	Kalagachia.
„ Madhab Chandra ...	Ditto ...	Ditto.
Panda, Beepin Behari ...	Lambodar Kavyatirtha ...	Basantia.
„ Hemanta Kumar ...	Brajamohan Vidyaratha ...	Dadpur.
Pati, Barendranath ...	Purushottam Vidyanidi ...	Bellyabera.
Ray, Yatindranath ...	Ditto ...	Gar Belyabera, Midnapore.
Rath, Hare Krishna. ...	Ditto ...	Ditto.
Sinha, Asutosh Tal ...	Mokshadacharan Smarthavagisa...	Jalamutha, Midnapore.
Tripathi, Biswoswar ...	Srinath Smritiratna ...	Kisorepur, Midnapore.
„ Natabar ...	Narayan Chandra Smartavagisa	Jhaoa Gobinda bera Bar, Midnapore.
„ Srinivas ...	Srinath Smritiratna ...	Kisorepur, Midnapore.
„ Yajneswar ...	Barada Kanta Nanda ...	Kesaidighi.
Utthasen, Haripada	Gopal Chandra Kavyaratna ...	Ratneswarpur, 24-Parganas.
„ Tarapada ...	Kalipada Siromani ...	Chandpal, 24-Parganas.

KAVYA.

FIRST DIVISION.

Chaudhuri, Pulinchandra ...	Rajani Kanta Smrititirtha ...	Irphala, Midnapore.

SECOND DIVISION.

Acharyya, Digambar ...	Dinanath Kavyatirtha ...	Basudebbera.
Chakravarti, Srinivas ...	Ditto ...	Ditto.
Pahari, Upendranath ...	Baidyanath Vidyaratna ...	Gar, Basudebpur.
Panda, Banamali ...	Lambodar Kavyatirtha ...	Basantia, Midnapore.
„ Upendranath ...	Satrughna Vidyaratna ...	Mahajan.

SMRITI.

SECOND DIVISION.

Bhattacharyya, Rasamaya ...	Umesa Chandra Vidyabhushan ...	Sunyakone.
Ray, Matilal	Sridhar Tarkabhushan ...	Paik Majitha, Midnapore.

VEDANTA.

FIRST DIVISION.

Satpati, Satyavadi ...	Purushottam Vidyanidi ...	Banital, Bellyabera.

SECOND DIVISION.

Bhattacharyya, Yatindramohan ...	Durga Charan Vedantatirtha ...	Bhagvat Chatuspathi, Bhowanipur.

UPANISHAD.

SECOND DIVISION.

Bandyopadhyaya, Surendranath ...	Divakar Vedantapanchanana ...	Contai, Midnapore.

PURAN.

SECOND DIVISION.

Bhattacharyya, Ramangnath ...	Rameswar Tarka Siddhanta ...	Bhemua.
Pahari, Murarimohan ...	Brajamohan Vidyaratna ...	Dadpur, Midnapore.

Name of successful candidate.	Name of teacher.	Place of tôl.
1	2	3

BURDWAN.

Bijaya Centre.

GRAMMAR.

First Division.

Bandyopadhyaya, Aswini Kumar	Rambrahma Tarkatirtha ...	Ghurisa.
,, Rampada ...	Ramgati Vidyanidhi ...	Bankura.
Bhattacharyya, Baikunthanath ...	Sasibhushan Nyayaratna ...	Ayodhya, Bankura.
,, Bata Krishna ...	Ram Akshaya Bhuttacharya ...	Kadakuli, Bankura.
,, Benimadhab ...	Jagadis Smritikantha ...	Tiluri, Bankura.
,, Brahmapada ...	Manujamohan Smrititirtha ...	Kirnahar, Birbhum.
,, Kartik Chandra ...	Ramdas Siromani ...	Dasghara, Hooghly.
,, Satkari ...	Ramtaran Tarkalankar ...	Brahman Boru, Birbham.
,, Yatindra Chandra	Adyacharan Tarkabhushan ...	Burdwan.
Chakravarti, Ramnath ...	Ramgati Vidyanidhi ...	Bankura.
Chattopadhyaya, Gadadhar ...	Joynarayan Vidyanidhi ...	Balsi, Bankura.
,, Haragovinda ...	Ramjivan Sen Gupta ...	Chhatua, Bankura.
,, Haripada ..	Manujamohan Smrititirtha ...	Kirnahar, Birbhum.
,, Sibaram ...	Sasibhushan Vedantatirtha ...	Gangatikuri, Burdwan.
Chaudhuri, Kunjavehari ...	Rajani Kanta Smritibhushan ...	Tiluri, Bankura.
Gangopadhyaya, Ramranjan ...	Ramkumar Nyayaratna ...	Bannira, Bankura.
Gupta, Pasupati	Ramjivan Sen Gupta ...	Chhatua, Bankura.
,, Rampada Sen ...	Sachchadananda Kaviraja ...	Kakila, Bankura.
Ghosh, Ram Saran, ...	Ramakshay Bhattacharyya ...	Kadakuli, Bankura.
Haldar, Panchananda ...	Bholanath Smrititirtha ...	Paratal, Burdwan.
Ray, Bankim Chandra ...	Ram Vishnu Chudamani ...	Bakulia.
,, Jitendra Kumar ...	Sitanath Vedanta Sastri ...	Chinsura.
,, Jatendra Lal ...	Kali Prasanna Smritiratna ...	Madhutale, Manbhum.
,, Manoranjan Chaudhuri ...	Manuja Mohan Smrititirtha ...	Kirnahar, Birbhum.
,, Ramratna Gupta ...	Raghuram Siromani ...	Bishnupur.
Sen, Satya Kinkar	Ramvishnu Chudamani ...	Bakulia, Bankura.
,, Tinkari	Jagadis Smritikantha ...	Tiluri, Bankura.
Sarkar, Bhupati Bhushan ...	Ganesa Chandra Kavibhushan ...	Muraddi, Manbhum.
,, Rampada ...	Goshta Vehari Gupta Chaudhuri	Moak, Manbhum.
,, Sukdeva ...	Ditto ...	Ditto.
Satpati, Mahadeva ...	Krishna Chandra Vidyalankar ...	Gârrâ, Bankura.

GRAMMAR.

Second Division.

Adhicari, Brajendra Kumar ...	Ramkumar Nyayaratna ...	Bameria, Bankura.
Baksi, Sasibhushan ...	Kaliprasanna Smritiratna ...	Madhutali, Manbhum.
Bandyapadhyaya, Satyakinkar ...	Nilmadhab Vidyaratna ...	Ranibazar, Bankura.
Bhattacharyya, Bijay Krishna ...	Ramakshay Bhattacharyya ...	Kadakuli, Bankura.
,, Bhabadeva ...	Asutosh Smrititirtha ...	Ukhara, Burdwan.
,, Gangadhar ...	Syama Sadaya Vidyabhushan ...	Baidyapur, Burdwan.
,, Haridas ...	Brajendra Kumar Vidyaratna ...	Bijaychatuspathi, Burdwan.
,, Hemanga ...	Ram Kinkar Tarkaratna ...	Patrasayar.
,, Kanti Bhushan ...	Kalidas Smritibhushan ...	Bipratikure, Birbhum.
,, Nalinaakha ...	Kaliprasanna Smritiratna ...	Madhutali, Manbhum.
,, Rampada ...	Haripada Smritiratna ...	Ghuskara.
,, Satkari ...	Sasibhushan Smrititirtha ...	Parulia, Bankura.
,, Satis Chandra ...	Haripada Smritiratna ...	Ghuskara.
,, Satis Chandra ...	Sasibhushan Smrititirtha ...	Parulia, Bankura.
,, Syamapada ...	Dwijapada Bhattacharyya ...	Badoa, Burdwan.

Name of successful candidate.	Name of teacher.	Place of tól.
1	2	3
BURDWAN—*continued.*		
GRAMMAR—*continued.*		
SECOND DIVISION—*continued.*		
Chakravarti, Ramkinkar ...	Kaliprasanna Smritiratna ...	Madhutali, Manbhum.
„ Tirkari ...	Sasibhushan Smrititirtha ...	Parulia.
Chattopadhyaya, Bhushan Chandra	Sasibhushan Nyayaratna ...	Ayodhya.
Chattopadhyaya, Raghunath ...	Kesabchandra Siromani ...	Harmasra, Bankura.
„ Surendranath ...	Bhagvat Chandra Chudamani ...	Sitalpur, Birbhum.
„ Saurindra Mohan	Baidyanath Smrititirtha ...	Ausgram.
Chandra, Kiritibhushan ...	Ramtaran Smrititirtha ...	Hitampur, Birbhum
Chaudhuri, Gopal Chandra ...	Basanta Kumar Tarkanidhi ...	Gopalnagar, Bankura.
„ Jyotish Chandra ...	Rajanikanta Smritibhushan ...	Tiluri, Bankura.
„ Kalipada ...	Ramvishnu Chudamani ...	Bankulia, Bankura
„ Nagendranath ...	Basantakumar Tarkanidhi ...	Gopalnagar, Bankura.
„ Sarat Chandra ...	Rajanikanta Smritibhushan ...	Tiluri.
Ghatak, Surendra Nath ...	Ramtaran Torkalankar ...	Brahmanbera, Birbhum.
Goswami, Bijaya Gopal ...	Kisori Mohan Bhattacharyya ...	Sonamukhi.
„ Prabhas Chandra ...	Rakhaldas Smrititirtha ...	Gopaldaspur, Burdwan.
„ Satyakinkar ...	Ramdurlab Vidyaratna ...	Palasdanga, Birbhum.
Gupta, Bijayaratna Das ...	Kesab Chandra Siromani ...	Harmassa, Bankura.
„ Chandra Sekhar Das ...	Kaliprasanna Smritiratna ...	Madhutali, Manbhum.
„ Gokul Chandra ...	Basanta Kumar Tarkanidhi ...	Gopalnagar, Bankura.
„ Kiran Chandra Das ...	Sasibhushan Nyayaratna ...	Ayodhya, Bankura.
„ Pasupati Nath Das ...	Kaliprasanna Smitiratna ...	Madhutali, Manbhum.
„ Tinuram Das ...	Raghuram Siromani ...	Bishnupur, Bankura.
„ Yatendra Mohan Ray ...	Sachchidananda Kaviraj ...	Kakela, Bankura.
Mazumdar, Asutosh ...	Ramkumar Nyayaratna ...	Bamira, Bankura.
Mukhopadhyaya, Dasarath ...	Ramgati Vidyanidhi ...	Bankura.
„ Durgadas ...	Ganes Chandra Kavibhushan ...	Muradi, Manbhum.
Pathak, Sasibhushan ...	Krishna Chandra Vidyalankar ...	Garra, Bankura.
Ray, Baidyanath ...	Rajanikanta Smritibhushan ...	Tiluri.
„ Haris Chandra ...	Basanta Kumar Tarkanidhi ...	Gopalnagar, Bankura.
Sarkar, Ambarisa	Gosta Bihari Gupta Chaudhuri	Benapani Chatuspathi Moak, Manbhum.
„ Karunamaya ...	Sitanath Vedantasastri ...	Chinsura.
„ Nagendra Nath ...	Kaliprasanna Smritiratna ...	Madhutali.
„ Purushottam ...	Gosta Behari Gupta Chandhuri...	Moak.
„ Radhikapada ...	Ditto ...	Do.
„ Rakhal Chandra ...	Basanta Kumar Tarkanidhi ...	Gopalnagar.
„ Sambhunath ...	Kali Prosanna Smritiratna ...	Madhutali, Manbhum.
Sen, Raghunath ...	Jagadis Smritikantha ...	Tiluri, Bankura.
KAVYA.		
FIRST DIVISION.		
Bhattacharyya, Surendranath ...	Radharaman Vedantatirtha ...	Lobepur, Birbhum.
Chakravarti, Dasarathi ...	Brajendra Kumar Vidyaratna ...	Bijaya Chatuspathi, Burdwan.
„ Harakali ...	Bholanath Smrititirtha ...	Paratal, Burdwan.
Mukhopadhyaya, Kripamaya ...	Brajendrakumar Vidyaratna ...	Burdwan.

Name of successful candidate.	Name of teacher.	Place of tól.
1	2	3
BURDWAN—*concluded.*		
KAVYA—*concluded.*		
SECOND DIVISION.		
Bhattacharyya, Panchanan ...	Rambrahma Tarkatirtha ..	Ghurisa, Birbhum.
Chakravarti, Satis Chandra ...	Basanta Kumar Kavyatirtha ...	Indas, Bankura.
Chattopadhyaya, Sripatinath .	Ditto ...	Ditto.
Gupta, Haripada Das .,.	Sachchidananda Kaviraj ...	Kankila Bankura.
Mukhopadhyaya, Ramnath ...	Rajanikanta Smritibhushan ...	Tiluri, Bankura.
,, Charu Chandra	Haripada Smritiratna ...	Guskara.
SMRITI.		
FIRST DIVISION.		
Bhattacharyya, Haripada ...	Harinath Vedantabagisa ...	Bijaya Chatuspathi, Burdwan.
SECOND DIVISION.		
Bhattacharyya, Basantakumar ...	Sitanath Vedantasastri ...	Chinsura.
,, Ramkumar ...	Ditto ...	Ditto.
Chattopadhyaya, Basantakumar ...	Haripada Smritiratna ...	Ghuskara.
NYAYA.		
SECOND DIVISION.		
Chaudhuri, Ramananda ...	Basanta Kumar Tarkanidhi ...	Gopalnagar
Gupta, Herambanath ...	Ditto ...	Ditto.
MIMANSA.		
SECOND DIVISION.		
Bhttacharyya, Haripada ...	Sasibhushan Vedantatirtha ...	Gangatikuri, Burdwan.
Kavyatirtha, Hanseswar ...	Ditto ...	Ditto.
SAMVEDA.		
SECOND DIVISION.		
Vyakarantirtha, Gourgopal ...	Sasibhushan Vedantatirtha ...	Gangatikuri, Burdwan.
DHARMA SABHA, RANGPUR.		
GRAMMAR.		
FIRST DIVISION.		
Bhattacharyya, Kamadacharan ...	Kailas Chandar Kavyatirtha ...	Kurigram, Rangpur.
,, Lalitananda ...	Ram Sankar Tarkaratna ...	Khagrabari, Cooch Bihar.
,, Pramathanath ...	Bepin Chandra Kavyaratna ...	Raikali, Bogra.
Chakravarti, Basanta Kumar ...	Ditto ...	Ditto.
Sarkar, Bijay Kanta ...	Ditto .	Ditto.
SECOND DIVISION.		
Bhattacharyya, Bhagbat Chandra	Kalikumar Padaratna ...	Kholarpur, Rangpur.
,, Durgadas ...	Raj Chandra Nyaya Panchanan	Malatinagar, Bogra.
,, Bishnu Prasanna	Syama Prasanna Vidyavachaspati	Rajarampur, Dinajpur.
Chakravarti, Trailokyanath ...	Bepin Chandra Kavyaratna ...	Raikali, Bogra.
Haldar, Karuna Kanta ..	Krishna Kumar Smrititirtha ...	Bandaikhara, Rajshahi.
Kanjilal, Surosa Chandra ...	M. M. Yadaveswar Tarkaratna ...	Rangpur.
Lahiri, Durgapada ...	Ditto ...	Ditto.
Mandal, Bhabanath ...	Krishna Kumar Smrititirtha ...	Bhandaikhora, Rajshahi.
Samajdar, Pramathanath ...	Bepin Chandra Kavyaratna ...	Raikali.

Name of successful candidate.	Name of teacher.	Place of tôl.
1	2	3

DHARMA SABHA, RANGPUR—*continued.*

KAVYA.

SECOND DIVISION.

Har, Kisori Kanta ...	Bepin Chandra Kavyaratna ...	Raikali, Bogra.

SMRITI.

SECOND DIVISION.

Bhattacharyya, Satis Chandra ...	Ramanimohan Vidyaratna ...	Natore, Rajshahi.

VEDANTA.

SECOND DIVISION.

Goswami, Lalitmohan ...	M. M. Yadaveswar Tarkaratna ..	Rangpur.

PURAN.

SECOND DIVISION.

Pandit, Kali Kamal ...	Kailasa Chandra Kavyatirtha ...	Baraibari, Rangpur.

ARYYA SAMMILANI SABHA, BAKLA.

GRAMMAR.

FIRST DIVISION.

Bangabas, Satis Chandra ...	Lalit Mohan Das Gupta ...	Gaila, Barisal.
Chakravarti, Akshay Kumar ...	Guru Charan Vidyaratna ...	Kotwalipara, Faridpur.
„ Hem Chandra ...	Lalit Mohan Das Gupta ...	Gaila, Barisal.
„ Narayanchandra Thakur.	Madhu Sudan Smritiratna ...	Ditto.
„ Sarat Chandra ...	Guru Charan Vidyaratna ...	Kotwalipara, Faridpur.
„ Syama Kanta ...	Ditto ...	Ditto.
Sen, Satis Chandra Gupta ...	Lalit Mohan Das Gupta ...	Gaila, Barisal.
„ Surendra Nath Mazumder ...	Ditto ...	Ditto.

SECOND DIVISION.

Bangabas, Sarada Charan ...	Lalit Mohan Das Gupta ...	Gaila, Barisal.
„ Tripura Nath ...	Ditto ...	Ditto.
Bhattacharyya, Nisi Kanta ...	Ram Charan Tarkaratna ...	Soloka, Barisal.
Chakravarti, Kailasachandra Thakur.	Lalit Mohan Das Gupta ...	Gaila, Barisal.
„ Sasi Bhushan ...	Aswini Kumar Siromani ...	Birmahal, Barisal.
„ Sital Chandra ...	Guru Charan Vidyaratna ...	Kotwalipara, Faridpur.
„ Yogendra Nath ...	Ditto ...	Ditto.

Ghatak, Gopal Chandra ...	Ram Charan Tarkaratna ...	Solok, Barisal.
Kaviraj, Nisi Kanta ...	Chandidas Siddhantabhushan ...	Bajitpur.
Sen, Upendra Nath Gupta ...	Lalit Mohan Das Gupta ...	Gaila, Barisal.
Thakur, Syama Prasanna ...	Prasanna Kumar Vedantatirtha	Bhudev Chatuspathi Harinahati, Faridpur.

KAVYA.

SECOND DIVISION.

Chakravarti, Mahendra Chandra	Chadi Das Siddhantabhushan ...	Bajitpur, Faridpur.

DHARAM RAKSHINI SABHA, BARISAL.

GRAMMAR.

FIRST DIVISION.

Bhattacharyya, Anath Bandhu ...	Tarak Chandra Smritibhushan ...	Dakshin Runsi, Barisal.
„ Asutosh ..	Asutosh Kavyatirtha ...	Khalisakota, Barisal.
„ Bama Charan ...	Sasi Bhushan Smrititirtha ...	Amtali, Faridpur.
„ Harendra Nath...	Sasi Bhushan Nyayaratna ...	Suktagarh, Barisal.
Chakravarti, Sarat Kumar ...	Ram Lal Smrititirtha ...	Sripur, Bangram, Khulna.

Name of successful candidate.	Name of teacher.	Place of tôl.
1	2	3

DHARMA RAKSHINI SABHA, BARISAL—*concluded.*

GRAMMAR—*concluded.*

SECOND DIVISION.

Bandyapadhaya, Satis Chandra ...	Haran Chandra Siromani ...	Runsi, Barisal.
Bangabas, Hara Kanta ...	Syama Charan Bandyopadhyaya	Rahamatpur, Barisal.
Bhattacharyya, Asutosh ...	Sasi Bhushan Nyayaratna ...	Suktagar, Barisal.
,, Lakshmi Kanta ...	Asutosh Kavyatirtha ...	Khalisakota, Barisal.
Chakravarti, Bilas Chandra ...	Uma Charan Smritiratna ...	Gutia, Barisal.
Gupta, Rohini Kumar ...	Haran Chandra Siromani ...	Runsi, Barisal.
,, Sarat Chandra Kar ...	Uma Charan Smritiratna ..	Gutia, Barisal
,, Upendra Chandra Sen ...	Biswambhar Smritiratna ...	Narayanpur, Barisal
Sen, Yamini Kumar ...	Chandra Mohan Vidyalankar ...	Agolpasa, Barisal.

KAVYA.

FIRST DIVISION.

Bhattacharyya, Ram Charan ...	Biswambhar Smritiratna ...	Narayanpur, Barisal.
Pal, Rajani Nath ...	Asutosh Kavyatirtha ...	Khalisakota, Barisal.

SECOND DIVISION.

Gupta, Aswini Kumar Sen ...	Asutosh Kavyatirtha ...	Khalisakota.
,, Rai Charan Sen ...	Ditto ...	Ditto.
,, Yoges Chandra Das ...	Yadu Nath Kavyaratna ...	Banaripara, Barisal.

SMRITI.

SECOND DIVISION.

Chakavarti, Sarat Chandra ...	Haran Chandra Siromani ...	Runsi, Barisal.

ARYYASIKSHA SAMITI, KOTWALIPARA.

GRAMMAR.

FIRST DIVISION.

Samajdar, Nisi Kanta ...	Amrita Lal Vyakarantirtha ...	Bhudeb Chatuspathi, Madanpâr, Faridpur.
,, Ram Chandra ...	Sasi Bhushan Smrititirtha ...	Amtali, Faridpur.

SECOND DIVISION.

Bhattacharyya, Kali Kanta ...	Barada Kanta Vidyaratna ...	Unasia, Faridpur.
,, Srinath ...	Ditto ...	Ditto.
Chakravarti, Yogendra Mohan ...	Govinda Chandra Vyakarantirtha	Ditto.
Gautam, Nilratna ...	Ditto ...	Ditto.
Ray, Purna Chandra ...	Amrita Lal Vyakarantirtha ...	Bhudeb Chatuspathi, Madanapâr, Faridpur.
Thakur, Nisi Kanta ...	Govinda Chandra Vyakarantirtha	Unasia, Faridpur.
,, Rasik Chandra ...	Kali Das Tarkaratna ...	Ditto.

PURAN.

SECOND DIVISION.

Chakravarti, Aswini Kumar ...	Kali Kanta Siromani ...	Unasia, Faridpur.

IDILPUR HITAISHINI SABHA.

GRAMMAR.

SECOND DIVISION.

Acharyya, Sarat Chandra ...	Harimohan Kavyatirtha ...	Ganganagar.
Bhattacharyya, Priya Nath ...	Gopal Chandra Kavyatirtha ...	Bijnisar, Faridpur.
,, Rajkumar ...	Prasanna Kumar Vidyanidhi ...	Bijnisar.
,, Yamini Kanta ...	Sasi Bhushan Smrititirtha ...	Amtali, Faridpur.
Kaviraj, Kisori Mohan ...	Ganga Charan Vidyabhushan ...	Rudrakar.
Sil, Yadu Nath ...	Barada Kanta Smritibhushan	Tulasar.

SMRITI.

SECOND DIVISION.

Bhattacharryya, Sib Chandra ...	Nilkanta Tarkavagisa ...	Bijnisar, Faridpur.

Name of successful candidate.	Name of teacher.	Place of tôl.
1	2	3

JDILPUR HITAISHINI SABHA—*concluded.*

UPANISHAD.

SECOND DIVISION.

Bhattacharyya, Nibaran Chandra	Yadaveswar Tarkaratna ...	Ranghur.

PURAN.

Bhattacharyya, Srinath ...	Sasi Bhushan Smrititirtha ...	Amtali, Faridpur.

MYMENSINGH DHARMA SABHA CENTRE.

GRAMMAR.

FIRST DIVISION.

Bhattacharyya, Ambica Charan ...	Giris Chandra Vidyarnava ...	Masua, Mymensingh.
,, Rajendra Chandra	Govinda Chandra Kritiratna ...	Ditto.
Chakravarti, Dharani Nath ...	Tarini Charan Smrititirtha ...	Ditto.
,, Satis Chandra ...	Rames Chandra Vidyaratna ...	Gala, Mymensingh.
,, Surendra Chandra .	Sasi Kumar Vidyabhushan ...	Sheri, Mymensingh.

SECOND DIVISION.

Bhattacharyya, Harendra Chandra	Kali Kamal Smritiratna ...	Bhatra, Mymensingh.
,, Lalit Kumar ...	Krishna Kumar Smrititirtha ...	Kanihari, Mymensingh.
,, Nalini Kanta ...	Gopi Nath Tarkatirtha ...	Sherpur, Mymensingh.
,, Prakas Chandra	Guru Das Vedantabinode .	Bakaljora, Mymensingh.
,, Rajani Kanta ...	Ditto ...	Ditto.
,, Ramani Kanta ...	Sasi Kumar Vidyabhushan ...	Sheri, Mymensingh.
,, Ram Dulal ...	Giris Chandra Kavyatirtha ...	Bajitpur, Mymensingh.
,, Satis Chandra ...	Guru Das Vedantavinode ...	Bakaljora, Mymensingh.
,, Surendra Chandra	Tarini Charan Smrititirtha ...	Masua, Mymensingh.
,, Sures Chandra ...	Guru Charan Smritiratna ...	Katihali, Mymensingh.
,, Yoges Chandra ...	Bipin Chandra Smrititirtha ...	Chapuri, Mymensingh.
Chakravarti, Devendra Kishore ...	Govinda Chandra Kritiratna ...	Masua, Mymensingh.
,, Dwarka Nath ...	Hridaya Chandra Nyayaratna ...	Brahmanberia, Tipperah.
,, Kali Kumar ...	Guru Das Vedantavinode ...	Bakaljora, Mymensingh.
,, Kamini Kumar ...	Durga Sundar Vidyavinode ...	Shakhuai.
Dey, Mahendra Chandra Sarkar	Ananda Sundar Smrititirtha ...	Sheri, Mymensingh.
Goswami, Rasaraj ...	Guru Charan Smritiratna ...	Katihali, Mymensingh.
,, Yoges Chandra ...	Dinabandhu Kritiratna ...	Yasodal.
Mazumdar, Santi Bhushan ...	Krishna Chandra Smritiratna ...	Chandura, Mymensingh
Sarma, Amrita Lal ...	Ananda Sundar Smrititirtha ...	Sheri, Mymensingh.
Sen, Abinas Chandra Gupta ...	Kali Kumar Smritiratna ...	Iswargram, Mymensingh.

KAVYA.

FIRST DIVISION.

Bhattacharayya, Yoges Chandra	Krishna Chandra Smritiratna ...	Chandura, Mymensingh.
Chakravarti, Sati Nath ...	Sasi Kumar Vidyabhushan ...	Sheri, Mymensingh.
Dhar Gupta, Durga Sundar ...	Guru Charan Smritiratna ...	Katihali, Mymensingh.

Name of successful candidate.	Name of teacher.	Place of tôl.
1	2	3

MYMENSINGH DHARMA SABHA CENTRE—*concluded.*

PURANA.

FIRST DIVISION.

Bhattacharyya, Durga Sundar ...	Haris Chandra Tarkaratna ...	Mulajore, 24-Parga.

DACCA.

GRAMMAR.

FIRST DIVISION.

Chakravarti, Nibaran Chandra ...	Abhaya Charan Vidyaratna ...	Basail, Dacca.
Das, Mahananda ...	Madhab Chandra Tarkachudamani	Sutrapur, Dacca.
Dey, Nibaran Chandra ...	Mahendranath Kavyatirtha	Ichapura.

SECOND DIVISION.

Acharyya, Loknath	Bama Charan Vyakaranitirtha ...	Jantrail, Dacca.
Bhattacharyya, Adinath ...	Girija Kanta Kavyatirtha ...	Medinimandal
„ Basanta Kumar	Jagat Chandra Siroratna ...	Noadda.
„ Brajendra Das ...	Rammanikya Vidyabhushan ...	Dhalchatru.
„ Devendra Kumar	Madhusudan Kavyaratna ...	Alipur, Faridpur.
„ Gurudayal ...	Madhab Chandra Tarkachudamani	Sutrapur, Dacca.
„ Harendra Nath ...	Rammanikya Vidyabhushan ...	Dhalchatra, Dacca.
„ Jagadananda ...	Madhab Chandra Tarkachudamani	Sutrapur, Dacca.
Chakravarti, Basanta Kumar ...	Adinath Vidyalankar ...	Pukurpur.
„ Durga Kumar ...	Dinanath Vidyabagis ...	Dhalchatra, Dacca.
„ Ganga Charan ...	Madhab Chandra Tarkachudamani	Sutrapur, Dacca.
Das, Pyari Mohan ...	Kamakhya Prasad Siromani ...	Hasail.
„ Sarat Chandra ...	Kailas Chandra Vidyabhushan ...	Amtali, Dacca.
Datta, Lalit Mohan ...	Ditto ...	Ditto.
Goswami, Trailokyanath ...	Adinath Vidyalankar ...	Pukurpur.
Gupta, Asutosh ...	Kripanath Vyakarantirtha ...	Simulia
„ Jnanada Charan Das ...	Upendra Nath Siddhantabagisa	Panchasar, Faridpur.
Ray, Tarakeswar ...	Dinanath Vidyabagisa ...	Dhalchatra, Dacca.

KAVYA

SECOND DIVISION.

Bhattacharyya, Bimalacharan ...	Kali Chandra Vidyalankar ...	Subhadya.
„ Krishnanarayan	Dinabandhu Tarkalankar ...	Medinimandal, Dacca.

SMRITI.

SECOND DIVISION.

Chakravarti, Surendra Nath ...	Rasmohan Vidyaratna ...	Rajdiha, Dacca.

PURAN.

SECOND DIVISION.

Chakuti, Gouranga Chandra	Madhab Chandra Tarkachudamani	Sutrapur, Dacca.

BINNAFAIR SANSKRIT ASSOCIATION.

GRAMMAR.

FIRST DIVISION.

Adhikari, Brindavan Chandra ...	Uma Sankar Bhattacharyya ...	Kalagaria, Dacca.
Bhattacharyya, Sarat Kamal ...	Phanibhushan Tarkavagisa ...	Darsan tôl, Pabna.
Bhaumik, Satis Chandra ...	Uma Sankar Bhattacharyya ...	Kalagaria, Dacca.
Chakravarti, Banku Behari ...	Chandidas Nyayatarkatirtha ...	Binnafair, Mymensingh.
„ Ramdayal ...	Akshaya Chandra Saraswati ...	Bharenga, Pabna.
Chaudhuri, Sib Chandra ...	Janardan Smritiratna ...	Kawakola, Pabna.

Name of successful candidate.	Name of teacher.	Place of tól.
1	2	3

BINNAFAIR SANSKRIT ASSOCIATION—*concluded.*

GRAMMAR—*concluded.*

SECOND DIVISION.

Chakravarti, Rasik Kumar	...	Chandidas Nyayatarkatirtha	...	Binnafair.
Lahiri, Kshitis Chandra	...	Akshaya Chandra Saraswati	...	Bharenga, Pabna.

SANKHYA.

SECOND DIVISION.

Chakravarti, Hrishikesa	...	Kedar Nath Kavyatirtha	...	Tangail.

MIMANSA

FIRST DIVISION.

Kavyatirthia, Banamali	...	Janardan Smrititratna	...	Kawakhola, Pabna.

BIHAR SANSKRIT SANJIVANI, BANKIPUR.

GRAMMAR.

FIRST DIVISION.

Bhatta, Harinandan	...	Sarvananda Tripathi	...	Pramode Vidyalaya Chapra.
„ Vidyadatta	...	Krishna Dayal Upadhyaya	...	Sikaria, Gaya.
Bhattacharyya, Harinath	...	Raj Krishna Tarkalankar	..	Benares.
Dwivedi, Ram Chandra	...	Siva Dayal Sukul	...	Madhuvani, Darbhanga.
Misra, Bharat	...	Krishna Datta Misra	...	Shobhi, Arrah.
„ Devnarayan	...	Chandra Sekhar Prasad Sarma	...	Tikari.
„ Hara Prasad	...	Sitaram Upadhyaya	...	Vedaviyalaya Rohini, Benares.
„ Keswar	...	Devdatta Misra	...	Brij Bhushan Kharkhewka Pathsala, Gaya.
„ Ram Prasad	...	Jiva Nath Misra	...	Benares.
Ojha, Chandra Sekhar	...	Ram Bhawn Upadhyaya	...	Deviprasad Pathsala, Ballia.
Pandeya, Ram Briksh	...	Yadunandan Misra	...	Jagdispur, Sahabad.
Sukul, Ambika Prasad	...	Govinda Prasad	...	Sajivan Vidyalaya, Tikari.
Tewari, Brajalal	...	Sivdayal Sukul	...	Madhuvani.
Tripathi, Chandradip	...	Ramavatar Tripathi	...	Rajpur.
„ Hemdhari	...	Dukha Mochan Jha	...	Hatwa.
„ Kesav	...	Mahavir Misra	...	Barnadharmopa yogini Pathsala, Arrah.
„ Thakur	...	Dukha Mochan Jha	...	Hatwa.
Vaidya, Mahavir	...	Chandra Sekhar Prasad Sarma	...	Tikari.
Vajpeyee, Mulchand	...	Harihar Dwivedi	...	Mansuk Ray's Pathsala, Patna.

SECOND DIVISION.

Chaturvedi, Brindavan	...	Ram Nandan Misra	...	Buxar Jubilee Pathsala, Sahabad.
Chaube, Ramkripal	...	Satyadeva Sukul	...	Goutam Pathsala, Revilganj.
„ Ramrup	...	Sobha Nath Pathak	...	Katahigali, Gaya.
Das, Ramratna	...	Govinda Prasad	...	Sajivan Vidyalaya, Tikari.
Dwivede, Jagadananda	...	Krishna Dayalu Upadhyaya	...	Sikaria, Gaya.
„ Kedar Nath	...	Raghuvir Saran Upadhyaya	..	Madhavpur, Patna.
„ Raj Mohan	...	Devdatta Misra	...	Braj Bhushan Khar Khewka Pathsala, Gaya.

Name of successful candidate.	Name of teacher.	Place of tól.
1	2	3
BIHAR SANSKRIT SANJIVANI, BANKIPUR—*concluded.*		
GRAMMAR—*concluded.*		
SECOND DIVISION—*concluded*		
Gabga Prasad ...	Devadatta Tripathi ...	Mahendru, Patna.
Ganguli, Bhagvat Prasad ...	Saligram Tripathi ...	Charkhari, Hamirpur.
Harihar Prasad ...	Devadatta Tripathi ...	Mahendru, Patna.
Jha, Kuseswar ...	Sinheswar Jha ...	Deoghar.
Mangan Lal ...	Krishna Sastri ...	Benares.
Misra, Batuk Nath ...	Devdatta Misra ...	Brij Bhusan Khar Khewka Pathsala, Gaya.
„ Bhagwat ...	Uma Nath Misra ...	Sajivan Vidyalaya, Tikari.
„ Birbhanjan ...	Rambhawn Upadhyaya ...	Devi Prasad Pathsala, Balia.
„ Chandra Mani ...	Viswa Nath Pathak ...	Bihar, Patna.
„ Chandra Pal ...	Ramapati Misra ...	Bhaskar Pathsala, Benares.
„ Dev Saran ...	Ramnandan Sarma ...	Buxar.
„ Chitrakut ...	Chandra Mani Pandit ...	Doomaroon Raj, Sahabad.
„ Janaki ...	Ram Lal Misra ...	Hariharganj, Palamau.
„ Dasarath ...	Chandra Sekhar Prasad Misra ...	Tikari, Gaya.
„ Madan Mohan ...	Ditto ...	Ditto.
„ Madho Prasad ...	Devdatta Misra ...	Brij Bhushan Khar Khewka Pathsala, Gaya.
„ Nanda Kisoro ...	Ramananda Pandeya ...	Baremathia, Shahabad.
„ Raghu Nath ...	Devadatta Mittra ...	Gaya.
„ Ram Anugraha ...	Deoki Nandan Misra ...	Arangabad, Gaya.
„ Ram Anugraha ...	Devdatta Misra ...	Gaya.
„ Ram Chandra Prasad ...	Ditto ...	Do.
„ Ramdev ...	Nanda Lal Sarma ...	Daudhapur, Gaya.
„ Ramnagina ...	Sivadayal Sukul ...	Madhuvani.
„ Ram Nandan ...	Rama Nanda Pandeya ...	Bareinathea.
„ Siddheswar ...	Uma Nath Misra ...	Sajivan Vidyalaya, Tikari.
„ Satyavadi ...	Sukha Sastri ...	Benares.
„ Suryya Prasad ...	Ram Narayan Sukul ...	Alamgunja, Patna.
„ Nanda Kisore ...	Ramananda Pandeya ...	Baremates, Shahabad.
„ Taranath ...	Ramnandan Misra ...	Buxar Jubilee tól, Sahabad.
„ Vishnu Prasad ...	Umanath Misra ...	Tikari, Gaya.
„ Yadav ...	Devdatta Misra ...	Brij Bhushan Khar Khewka Pathsala, Gaya.
Ojha, Mukh Lal ...	Ramnandan Misra ...	Buxar Jubilee tól, Shahabad.
„ Ram Chandrika ...	Mahabir Misra ...	Barna Dharmopayogini Pathsala, Arrah.
Pandeya, Behari ...	Devdatta Misra ...	Brij Bhushan Khar Kheoka Pathsala, Gaya.
„ Deo Narayan ...	Ramnandan Sarma ...	Buxar.
„ Madhav ...	Sinheswar Jha ...	Deoghar.
„ Mahavir ...	Govinda Prasad ...	Sajivan Vidyalaya, Tikari.
„ Ramadhar ...	Ramchiz Pandeya ...	Majhaoan.
„ Ram Pratap ...	Krishnadayalu Sarma ...	Tikari, Gaya.
Pathak, Maheswar ...	Umanath Misra ...	Sajivan Vidyalaya, Tikari.
„ Muralidhar ...	Nanda Lal Sarma ...	Dandhapur, Gaya.
„ Ram Garib ...	Ramchiz Pandeya ...	Majhoan, Arrah.

Name of successful candidate.	Name of teacher.	Place of tôl.
1	2	3

BIHAR SANSKRIT SANJIVAN, BANKIPUR—*continued.*

GRAMMAR—*concluded.*

SECOND DIVISION—*concluded.*

Pathak, Prabhu Datta ...	Krishnadayalu Upadhyaya ...	Sikaria Tikari, Gaya.
„ Rudra Datta ...	Mahabir Misra ...	Barnadharmopayogini Pathsala, Arrah.
„ Sukh Dev ...	Ramananda Pandeya ...	Bari Mathea.
Sarma, Ganesa ...	Dovakinandan Misra ...	Aurangabad, Gaya.
„ Jharkhandeswar ...	Sivapujak Sarma ...	Tewari Pathsala, Benares.
„ Kalidatta ...	Devdatta Misra ...	Brij Bhushan Kharkhewka Pathsala, Gaya.
„ Lakshmi Narayan ...	Yadunandan Misra ...	Jagdispur, Shahabad.
„ Ram Nandan ...	Ramprahlad Sarma ...	Khudwa, Gaya.
„ Siva Pujak ..	Nanda Kisore Misra ...	Kharouni, Arrah.
Saran, Ramvehari ...	Ramchiz Pandeya ..	Majhwa, Arrah.
Sinha, Ram Nandan ...	Lakshminarayan Misra ...	Chainpur.
Sukul, Bageswari ...	Ramavatar Tripathi ...	Rajpur, Mirzapur.
„ Rampratipal ...	Mahabir Misra ...	Barnadharmopayogini Pathsala, Arrah.
Tewari, Kisarinandan ...	Sakalnarayan Pandeya ...	Narayan Vidyalaya, Shahabad.
„ Ram Bhajan ...	Krishna Dayalu Upadhyaya ...	Gaya.
„ Siva Sankar ...	Sivdayal Sukul ...	Madhuvani.
Tripathi, Harivansa ...	Ramchiz Pandeya ...	Manjhowli, Arrah.
„ Mahesa ...	Yadunandan Misra ...	Jagadispur, Shahabad.
„ Ramlakshan ...	Krishna Dayalu Upadhyaya ...	Sikariya.
„ Ramrekha ...	Baldeo Sarma ...	Sanskrit Sanjivani, Arrah.
„ Ramyas ...	Satyadeva Sukul ...	Goutam Pathsala, Revilganj.
„ Sankar Lal ...	Saligram Tripathi ...	Charkhari.
„ Tuka Nath ...	Ramakshaya Trivedi ...	Amnour, Saran.
„ Vasisa ...	Ramchiz Pandeya ...	Majhoan.
Upadhyaya, Purna Datta ...	Ramavatar Pandeya ...	Benares.
Vaidya, Dharmadatta ...	Devdatta Misra ...	Brij Bhushan Kharkhewka Pathsala Gaya.
„ Nanda Kisore ...	Chandra Sekhar Prasad Misra ...	Tikari.

KAVYA.

FIRST DIVISION.

Misra, Basudeva ..	Umanath Misra ...	Sajivan Vidyalya, Tikari.

SECOND DIVISION.

Jha, Dukkha Mochan ...	Harihar Nyayacharyya ...	Manauk Ray's Pathsala, Patna.
„ Sriram ...	Ditto ...	Ditto.
Misra, Beni Prasad ...	Govinda Prasad ...	Sajivan Vidyalaya, Tikari, Gaya.
„ Devdatta ...	Sivanandan Tripathi ...	Pramode Vidyalaya, Chapra.
„ Hari Narayan ...	Sivanandan Misra ...	Bankipur.

Name of successful candidate.	Name of teacher.	Place of tôl.
1	2	3

BIHAR SANSKRIT SANJIVAN, BANKIPUR—*concluded.*

NYAYA.

SECOND DIVISION.

Acharyya, Bhatta Nath Swami ...	Sankar Bhattacharyya ...	Bhaskar Pathsala Benares.
Gadudadhvaja ...	Molakram Sarma ...	Brindaban.

UPANISHAD.

SECOND DIVISION.

Chaturvedi, Nanda Prasad ...	Harihar Nyayacharyya ...	Mansuk Ray's Pathsala, Jhawganj, Patna.

JYOTISH.

Pandeya, Sitaram ...	Mahesadatta Pandeya ...	Arakhpur, Saran.
Tripathi, Durikshan ...	Bikramaditya Misra ...	Bharateswari Pathsala, Chapra, Saran.

MIMANSA.

Chaturvedi, Ramyatna ...	Harihar Nyayacharyya ...	Mansuk Roy's Pathsala, Jhawganj, Patna.

BIHAR SANSKRIT SANJIVAN, DARBHANGA CENTRE.

GRAMMAR.

FIRST DIVISION.

Jha, Baldeo	Ratneswar Jha	Manmubihotpahi tôl Darbhanga.
„ Sitaram	Musli Jha	Harinagar, Darbhanga.

SECOND DIVISION.

Chawdhuri, Biswambhar ...	Raghunandan Misra ...	Madhuvani.
„ Munindra ...	Yadunath Misra	Ballipur, Darbhanga.
Jha, Dasarath ...	Ramlal ...	Aktearpur.
„ Dinanath	Dhanurdhar Jha	Devipur, Darbhanga.
„ Kuseswar	Yadunath Misra	Ballipur.
„ Madhusudan	Musli Jha	Harinagar, Darbhanga.
„ Mawjilal	Ramlal Jha	Akhtearpur, Darbhanga.
„ Nityananda	Ditto	Ditto.
„ Prabhunath	Dhanurdhar Jha	Devipur, Darbhanga.
„ Radhakanta	Loknath Jha	Gangawli, Darbhanga.
„ Rajkumar	Ratneswar Jha	Darbhanga.
„ Satyadeva	Raghunandun Misra ...	Madhubani.
„ Sitaram	Mukunda Jha	Haripur, Madbubani.
„ Srinandan	Ramlal Jha	Akhtearpur.
„ Srinath	Kapileswar Sarma	Sukhwar. Darbhanga.
„ Trailokya Nath ...	Harisankar Jha	Tharhi, Darbhanga.
„ Umakanta	Ugri Jha	Kailakh.
„ Upendra	Dukhamochan Jha	Ditto.
Misra, Biswesswar	Yasodanandan Bhatta ...	Akhtearpur.
„ Dasarath	Ramlal Jha	Ditto.
„ Divakanta	Harisankar Jha	Tharhi, Darbhanga.
„ Madhav	M. M. U. Chitradhar Misra ...	Darbhanga.
„ Nageswar	Ratneswar Jha	Ditto.
„ Srinath ...	Kapileswar Sarma ...	Sukhawar.
„ Srinandan ...	Ramlal Jha	Akhtearpur.
„ Sukhdeva	Ditto	Ditto.
„ Sundar	Ditto	Ditto.
„ Srinandan ...	Ratneswar Jha	Darbhanga.
„ Surendra Mohan ...	Lokenath Jha	Gangowli.
„ Triveni	Yasodanandan Bhatta ...	Akhtearpur.
Pathak, Lakshmikanta ...	Srinandan Jha	Tharhi, Darbhanga.

Name of successful candidate.	Name of teacher.	Place of tól.
1	2	3

BIHAR SANSKRIT SANJIVAN, DARBHANGA CENTRE—*concluded.*

GRAMMAR—*concluded.*

SECOND DIVISION—*concluded.*

Sinha, Kameswar Narayan ...	M. M. U. Chitradhar Misra ...	Darbhanga.
Thakur, Damodar	Ramlal Jha	Akhtearpur.
,, Govinda	Ditto	Ditto.
,, Harivansa	Ditto	Ditto.

KAVYA.

SECOND DIVISION.

Chaudhuri, Damodar ...	Raghunandan Misra ...	Madhubani.
Jha, Chandeswar	Musli Jha	Harinagar, Darbhanga.

JYOTISH.

SECOND DIVISION.

Jha, Ananta	Gangadhar Jha	Janki, Darbhanga.
,, Kamalakanta	Genalal Chaudhuri	Akhtearpur.
,, Lilakanta	Yadunandan Misra	Udayi, Bahera.
,, Markanda	Genalal Chaudhuri	Akhtearpur.
,, Muktinath	Ditto	Ditto.
,, Pitambar	Kesav Misra	Gajahra, Darbhanga.
,, Ramji	Genalal Chaudhuri ...	Akhtearpur, Darbhanga.
,, Sukadev	Yadunandan Misra ...	Udayi, Bahera.
Misra, Balgovinda	Ditto ...	Ditto.
Thakur, Kuseswar	Kesab Misra	Gajahra, Darbhanga.
,, Sibanandan... ...	Genalal Chaudhuri	Akhtearpur, Darbhanga.

MIMANSA.

Misra, Sivnandan	M. M. U. Chitradhar Misra ...	Darbhanga.

BIHAR SANSKRIT SANJIVAN, BHAGALPUR CENTRE.

GRAMMAR.

SECOND DIVISION.

Pathak, Parameswar Datt ...	Iswar Datta Pathak ...	Karnagarh, Monghyr.
Thakur, Kanaklal	Mukundaram Pandeya ...	Karnagarh, Bhagalpur.

JYOTISH.

SECOND DIVISION.

Khan, Parameswar	Bathan Jha	Karnagar, Bhagalpur.
Misra, Srishtidhar	Ditto	Ditto.
,, Uchitlal	Ditto	Ditto.

BIHAR SANSKRIT SANJIVAN, MUZAFFARPUR CENTRE.

GRAMMAR.

FIRST DIVISION.

Misra, Ramnath	Gopi Krishna Chaube ...	Dharma Samaj School, Muzaffarpur.
,, Siba Prasad	Ditto ...	Ditto.
Tripathi, Bidyadhari ...	Mahabir Pandeya	Dharma Samaj School, Matihari.

Name of successful candidate.	Name of teacher.	Place of tol.
1	2	3

BIHAR SANSKRIT SANJIVAN, MUZAFFARPUR CENTRE—*concluded.*

GRAMMAR—*concluded.*

SECOND DIVISION.

Dube, Dharanidhar	Mahabir Pandeya	Dharma Samaj School, Matihari.
„ Jaydev ...	Ditto	Ditto.
„ Kameswar Datta ...	Gopi Krishna Chaube ...	Dharma Samaj School, Muzaffarpur.
Misra, Chaturanan	Mohabir Pandeya	Dharma Samaj School, Matihari.
„ Jaleswar	Ditto	Ditto.
„ Ramdev	Ditto	Ditto.
Mukhopadhyaya, Manmathanath	Ramdhin Jha	Mukerji's Seminary, Muzaffarpur.
Pandeya, Rambanes	Bhagwan Datta Pandeya ...	Kisaniagar, Matihari.
„ Yogeswar	Gopikrishna Chaube ...	Dharma Samaj School, Muzaffarpur.
Tripathi, Mahabir	Mahabir Pandeya	Dharma Samaj School, Matihari.
„ Rambilas	Ditto	Ditto.
Vajpaye, Brahmadev ..	Ditto	Ditto.

KAVYA.

SECOND DIVISION.

Dube, Sitasaran	Gopikrishna Chaube ...	Dharma Samaj School, Muzaffarpur.

JYOTISH.

SECOND DIVISION.

Misra, Sukadev	Nityananda Jha	Dharma Samaj School, Muzaffarpur.
Tripathi, Bhagbat	Bishnudatta Jha	Dharma Samaj School, Matihari.
„ Bhekdhari	Ditto	Ditto.

VIDYOT SAHINI SABHA, NARAIL.

GRAMMAR.

FIRST DIVISION.

Bandyopadhyaya, Surendra Nath	Prankrishna Smrititirtha ...	Korakdi.
Bhattacharyya, Tara Prasanna ...	Priya Nath Sankhyatirtha ...	Baruikhali, Jessore.
Chakravarti, Nagendra Mohan ...	Prankrishna Smrititirtha ...	Korakdi.
Mitra, Bhuban Mohan ...	Annadacharan Kavyatirtha ...	Auria.
Mukhopadhyaya, Bhupati Nath ...	Umanath Smriti Siromani ...	Brahman Rangdia, Khulna.

SECOND DIVISION.

Bandyopadhyaya, Nilratna ...	Prankrishna Smritiratna ...	Korkdi.
„ Sibnath ...	Sasadhar Smrititirtha ...	Deopara, Jessore.
Bhattacharyya, Abinas Chandra ...	Durgadas Kavyatirtha ...	Kurigram, Jessore.
„ Girija Sankar ...	Prankrishna Smrititirtha ...	Korkdi.
„ Satis Chandra ...	Durgadas Kavyatirtha ...	Kurigram, Jessore.
Chakravarti, Beni Gopal ...	Sasadhar Smrititirtha ...	Deopara, Jessore.
„ Bepin Bihari ...	Asutosh Smritiratna ...	Piljang, Khulna.
„ Krishna Chandra ...	Durgadas Kavyatirtha ...	Kurigram, Jessore.
„ Lalit Kumar ...	Sachindra Nath Sankhyatirtha ...	Fookura, Faridpur.

Name of successful candidate.	Name of teacher.	Place of tôl.
1	2	3

VIDYOT SAHINI SABHA, NARAIL—*concluded.*

GRAMMAR—*concluded.*

SECOND DIVISION—*concluded.*

Chakravarti, Nagendra Nath ...	Annadacharan Kavyatirtha ...	Auria.
„ Yatindra Nath ...	Asutosh Smritiratna ...	Piljang, Khulna.
Ghosh, Nalini Ranjan ...	Annadacharan Kavyatirtha ...	Auria.
Gupta, Upendra Nath ...	Sachindra Nath Sankhyatirtha ...	Fookura, Faridpur.
„ Amarnath ...	Sasadhar Smrititirtha ...	Bhugilhat.
Mukhopadhyaya, Anadi Nath ...	Annadacharan Kavyatirtha ...	Auria.
„ Kesab Lal ...	Umanath Smritisiromani ...	Brahmanrangdia, Khulna.
Nath, Jagadis Chandra ...	Asutosh Smritiratna ...	Piljang, Khulna.
Somaddar, Jagadis Chandra ...	Ditto ...	Ditto.

SMRITI.

SECOND DIVISION.

Bhattacharyya, Biswesswar ...	Sasadhar Smrititirtha ...	Diapara, Jessore.
Chakravarti, Panchanan ...	Asutosh Smritiratna ...	Piljang, Khulna.

SANKHYA.

FIRST DIVISION.

Chakravarti, Suresa Chandra ...	Priya Nath Sankhyatirtha ...	Baruikhali, Jessore.

PURAN.

SECOND DIVISION.

Mukhopadhyaya, Hari Charan ...	Sasadar Smrititirtha ...	Dewapara, Jessore.
Bhattacharyya, Sasadar ...	Asutosh Smritiratna ...	Piljang, Khulna.

PURI JAGANNATH SAMITI.

GRAMMAR.

FIRST DIVISION.

Misra, Balabhadra ...	Baidyanath Misra ...	Sanskrit School, Puri.
Sarangee, Jagannath ...	Bhubaneswar Kavyatirtha ...	Pratap Purushothampur, Puri.

SECOND DIVISION.

Das, Krishna Chandra ...	Joy Krishna Misra ...	Puri.
Mahapatra, Damodar ...	Ramkrishna Misra ...	Sanskrit School, Puri.
„ Lingaraj ...	Baidyanath Misra ...	Ditto.
Misra, Jagannath ...	Bhubaneswar Kavyatirtha ...	Pratap Purushothampur, Puri.
„ Lakshman ...	Baidyanath Misra	Sanskrit School, Puri.
„ Madhav ...	Bhubaneswar Kavyatirtha ...	Pratap Purushothampur, Puri.
„ Madhusudan ...	Gadadhar Tripathi ...	Raghunandan tôl, Puri.
„ Yameswar ...	Gopinath Saranghee ...	Ramchandra tôl, Puri.
Raj, Guru Biswanath ...	Yogendra Kavyavisarad ...	Sanskrit School, Puri.
Rath, Damodar ...	Gadadhar Tripathi ...	Raghunandan tôl, Puri.
„ Gopal	Kulamani Misra	Gopiballabh tôl, Satyavadi, Puri.

Name of successful candidate.	Name of teacher.	Place of tôl.
1	2	3

PURI JAGANNATH SAMITI—*concluded.*

GRAMMAR—*concluded.*

SECOND DIVISION—*concluded.*

Ray, Balkrishna Samanta ...	Baidyanath Misra	Sanskrit School, Puri.
Saranghee, Gangadhar ...	Bhubaneswar Kavyatirtha ...	Pratap Purushottampur tôl, Puri.
„ Harekrishna ...	Gadadhar Tripathi	Raghunandan tôl, Puri.
„ Ramkrishna ...	Bhuvaneswar Saranghee ...	Pratap Purushottampur tôl, Puri.
Tripathi, Lokenath ...	Damodar Misra	Puri.

KAVYA.

FIRST DIVISION.

Das, Udayanath	Gadadhar Tripathi	Raghunandan tôl, Puri.
Misra, Narayan	Nagendra Kavyatirtha ...	Sanskrit School, Puri.

SECOND DIVISION.

Acharyya, Bhagwan ...	Gadadhar Tripathi ...	Raghunandan tôl, Puri.
Mahapatra, Dinabandhu ...	Gopinath Saranghee ...	Balabhadrapur, Puri.
„ Gadadhar ...	Yogendra Kavyatirtha ...	Sanskrit School, Puri.

SMRITI.

FIRST DIVISION.

Misra, Sadasib	Biswanath Mahapatra ...	Biswanath tôl, Puri.

SANKHA.

FIRST DIVISION.

Misra, Basudeva	Jagannath Misra	Sanskrit School, Puri.
„ Ananda	Jagannath Misra	Sanskrit School, Puri.

ORISSA SANSKRIT SAMITI, CUTTACK.

GRAMMAR.

FIRST DIVISION.

Das, Parikshit ...	Ghanasyam Saranghee ...	Gopinathpur, Cuttack.
Misra, Dinabandhu ...	Umanath Misra ...	Sridhar.
„ Gopinath ...	Ganeswar Misra ...	Dhenkanal.
„ Kasinath ...	Ditto ...	Ditto.
„ Kumar Charan ...	Vidyadhar Vedantavagisa ...	Baldevji, P. O. Kendrapara.
„ Srinath ...	Gangadhar Kavyatirtha ...	Padmanath Ganja.
Saranghee, Balaram ...	Bholanath Acharyya ...	Madan Mohan, Kendrapara, Cuttack.
Satpati Bholanath ...	Ghanasyam Sarangee ...	Gopinathpur.
„ Dayanidhi ...	Vidyadhar Vedantavagisa ...	Baldevji, Cuttack.
Tripathi, Adikanda ...	Ditto ...	Ditto.
„ Nandakisore ...	Srinath Bhattacharyya ...	Punang.

SECOND DIVISION.

Acharyya, Achyutananda ...	Bholanath Acharyya ...	Madan Mohan, Kendrapara.
„ Brindaban ...	Ram Chandra Sarangi ...	Nimaisarpur, Cuttack.
Adhikari, Bhaktajivan ...	Umanath Misra ...	Sridhar, Cuttack.
Das, Balaram ..	Bidyadhar Banibhushan ...	Khandapara.

Name of successful candidate.	Name of teacher.	Place of tól.
1	2	3

ORISSA SANSKRIT SAMITI, CUTTACK—*concluded.*

GRAMMAR—*concluded.*

SECOND DIVISION.

Das, Chakradhar	...	Ghanesyam Misra	...	Manik Ghoshe's Bazar, Cuttack.
„ Damodar	...	Gangadhar Kavyatirtha	...	Padmanabha, Ganja.
Devata, Padmanabha	...	Lambodara Misra	...	Rajnagar, Cuttack.
Mahanti, Narasinha Charan	...	Narayan Das	...	Kanika Rajbati, Kendrapara.
Mahapatra, Mukunda	...	Sidheswar Tarkasidhanta	...	Yubraj.
Misra, Banambar	...	Trilochan Kavyatirtha	...	Dhenkanal, Gurjat.
„ Brajabandhu	...	Narayan Das	...	Kanika Rajbati.
„ Daityari	...	Gangadhar Misra	...	Boad, Gurzat.
„ Gopinath	...	Vidyadhar Banibhushan	...	Khandpara, Cuttack.
„ Harikrishna	...	Vidyadhar Vedantavagisa	...	Baldeogi, Cuttack.
„ Padmanabha	...	Umanath Misra	...	Sridhar, Cuttack.
„ Vidyadhar	...	Gangadhar Kavyatirtha	...	Padmanabh.
„ Yameswar	...	Kirtivas Misra	...	Angul.
Pati, Chintamani	...	Gangadhar Kavyatirtha	...	Padmanabha, Ganja, Cuttack.
Rath, Baidyanath	...	Lambodar Misra	...	Rajnagar, Cuttack.
„ Somenath	...	Ditto	...	Ditto
Saranghee, Narayan	...	Vidyadhar Vedantavagisa	...	Baldevji, Cuttack.
Satpati, Maguni	...	Ramchandra Saranghee	...	Nimaisarpur, Katsahi, Cuttack.

KAVYA.

FIRST DIVISION.

Misra, Chandra Sekhar	...	Bidyadhar Banibhushan	...	Khandapara.

SECOND DIVISION.

Misra, Somenath	...	Umanath Misra	...	Sridhar, Cuttack.
Nanda, Banchhanidhi	...	Yameswar Kavyatirtha	...	Baldeoji, Cuttack.
Panda, Baidyanath	...	Purushottom Tarkalankar	...	Haribasar, Cuttack.

SMRITI.

FIRST DIVISION.

Misra, Gananath	...	Ananta Vidyabhushan	...	Dhenkanal.
Nanda, Balkrishna	...	Ditto	...	Ditto.

SECOND DIVISION.

Das, Balkrishna	...	Fakirdas	...	Sundargram, Cuttack.
„ Kulamani	...	Ditto	...	Ditto.
Rath, Dayanidhi	...	Mukunda Kavyatirtha	...	Padmanabha, Ganja.

YAJURVEDA.

SECOND DIVISION.

Das, Raghunath	...	Makunda Kavyatirtha	...	Padmanabh, Ganja.
Misra, Aparti	...	Ditto	...	Ditto.
„ Lakshmidhar	...	Ditto	...	Ditto.
Pani, Gopinath	...	Ditto	..	Ditto.
Rath, Damodar	...	Ditto	...	Ditto.

BALASORE SANSKRIT SAMITI.

GRAMMAR.

FIRST DIVISION.

Chakravarti, Upendranath	...	Mahendra Nath Smritiratna	...	Dehurda tól, Balasore.
Gupta, Dwarkanath	...	Artatran Kaviratna	...	Sri Ramchandra tól, Balasore.

Name of successful candidate.	Name of teacher.	Place of tôl.
1	2	3

BALASORE SANSKRIT SAMITI—*concluded.*

GRAMMAR—*concluded.*

FIRST DIVISION—*concluded.*

Misra, Bhagwan	...	Amarnath Kavyatirtha	...	Ganeswarpur, Balasore
„ Lakshmikanta	...	Kirtivas Nyayaratna	...	Amarda tôl, Balasore.
Pani, Birbhadra	...	Buddhinath Kavyatirtha	...	Mayurbhaya.
Rath, Gokhu	...	Mayadhar Tarkapanchanan	...	Bharati tôl, Irda.
Saranghee, Satrughna	...	Artatran Kaviratna	...	Sri Ramchandra tôl, Balasore.
„ Sarveswar	...	Mayadhar Tarkapanchanan	...	Bharati tôl, Irda.
Satpati, Baidyanath	...	Buddhinath Kavyaratna	...	Mayurbhanja.

SECOND DIVISION.

Kar, Bombadhar	...	Mayadhar Tarkapanchanan	...	Bharati tôl, Irda.
Mahapatra, Kasinath	...	Aniruddha Saranghee	...	Ganeswarpur tôl. Balasore
Misra, Anantaprasad	...	Buddhinath Kavyatirtha	...	Mayurbhanja.
„ Ghanesyam	...	Artatran Kaviratna	...	Sri Ramchandra tôl.
Sirapani	...	Haladhar Misra	...	Hirak Jubilee tol, Keyunjhar.
Pani, Padmalochan	...	Amarnath Kavyatirtha	...	Padambedha tôl, Ganeswarpur, Balasore.
Satpati, Gajendra	...	Artatran Kaviratna	...	Sri Ramchandra tôl, Balasore.
„ Jay Krishna	...	Buddhinath Kavyatirtha	...	Mayurbhanja.
„ Ramchandra	...	Artatran Kaviratna	...	Sri Ramchandra tôl, Balasore,
„ Sri Kanta	...	Mayadhar Tarkapanchanan	...	Bharati tôl, Irda.
Udgata, Brindavan	...	Haladhar Misra	...	Keyunjhar.

KAVYA.

FIRST DIVISION.

Misra, Jagannath	...	Bhubaneswar Mahapatra	...	Hirak Jubilee tôl Balasore.
„ Karunakar	...	Ditto	...	Ditto.
Saranghee, Iswarchandra	...	Mayadhar Tarkapanchanan	...	Bharati tôl, Irda.

SECOND DIVISION.

Chakravarti, Chaturbhuj	...	Badhinath Kavytirtha	...	Mayurbhanja.
Kar, Krishnaprasad	...	Ditto	...	Ditto.
Misra, Kalicharan	...	Bhubaneswar Mahapatra	...	Hirak Jubilee tôl, Balasore.
„ Narasinha	...	Mayadhar Tarkapanchanan	...	Bharati tôl, Irda.

SMRITI.

FIRST DIVISION.

Kavyatirtha, Purushottam	...	Mayadhar Tarkapanchanan	...	Bharati tôl, Irda.

SECOND DIVISION.

Chakravarti, Troilokyanath	...	Biswanath Kavyatirtha	...	Kuarpur tôl, Balasore.

SANKHYA.

SECOND DIVISION.

Misra, Upendra	...	Vaishanv Charan Vidyasagar	...	Mayurbhaya, Balasore.

Name of successful candidate.	Nname of teacher.	Place of tôl.
1	2	3
CHITTAGONG VIDYABINODINI SABHA.		
GRAMMAR.		
FIRST DIVISION.		
Bhattacharyya, Ramani Mohan ...	Kali Kanta Smritibhushan ...	Bhatikhain, Chittagong.
„ Surendra Nath ...	Ditto ...	Ditto.
Bhanja, Kshirode Chandra ...	Kali Kinkar Smritibhushan ...	Khiptapohar, Chittagong.
Chakravarti, Harendra Nath ...	Kali Kanta Smritibhushan ...	Bhatikhain, Chittagong.
Dastidar, Bijay Krishna ...	Jainta Kumar Das Gupta ...	Rahmatganj, Chittagong.
Guha, Birendra Lal ...	Syama Charan Smritiratna ...	Patya, Chittagong.
Purohita, Rajani Kanta ...	Sasi Bhushan Smrititirtha ...	Barama, Chittagong.
Rakshit, Surendra Chandra ...	Kamala Krishna Smrititirtha ...	Dharala, Chittagong.
SECOND DIVISION.		
Acharyya, Aparna Charan ...	Nil Kamal Tarkaratna ...	Chandanaish, Chittagong.
Bhattacharyya, Bharati Mohan ...	Nanda Kumar Smritiratna ...	Kathgarh, Chittagong.
„ Niranjan ...	Syama Charan Smritiratna ...	Patya, Chittagong.
„ Pratap Chandra ...	Ram Kanai Vidyabhushan ...	Kathgarh, Chittagong.
„ Ram Kisore ...	Kali Kanta Siromani ...	Municipal Sanskrit tôl, Chittagong.
„ Siva Charan ...	Nanda Kumar Smritiratna ...	Kathgarh, Chittagong.
Biswas, Surendra Lal ...	Ditto ...	Ditto.
Chakravarti, Aparna Charan ...	Syama Charan Smritiratna ...	Patya, Chittagong.
„ Jnanada Charan ...	Kamala Krishna Smrititirtha ...	Dharala, Chittagong
„ Kamini Kumar ...	Ditto ...	Ditto.
„ Mahendra Lal ...	Syama Charan Smritiratna ...	Patya, Chittagong.
„ Ram Chandra ...	Sasi Bhushan Smrititirtha ...	Barama, Chittagong.
„ Ram Sankar ...	Prannath Tarkavinode ...	Mathberia, Chittagong.
„ Satis Chandra ...	Kamala Krishna Smrititirtha ...	Dharala, Chittagong.
„ Yogendra Chandra	Kali Kanta Smritibhushan ...	Bhatikain, Chittagong.
Chaudhuri, Bagala Charan ...	Prannath Tarkavinode ...	Mathberia, Chittagong.
Das, Binode Chandra ...	Ramnath Tarkavinode ...	Ditto.
„ Chandra Kumar ...	Sitanath Siddhantabagisa ...	Jagatpur Asram, Chittagong.
Mazumdar, Prabhat Chandra ...	Ramnath Tarkavinode ...	Mathberia.
Purohit, Upendra Chandra ...	Kamala Krishna Smrititirtha ...	Dharala, Chittagong.
Rakshit, Satis Chandra ...	Kamala Krishna Smrititirtha ...	Dharala.
Sarma, Surendra Lal ...	Kali Kanta Smritibhushan ...	Bhatikhain, Chittagong.
Sarvavidya, Nagendra Chandra ...	Kamala Krishna Smrititirtha ...	Dharala, Chittagong.
„ Purna Chandra ...	Kali Kanta Smritibhushan ...	Bhatikhain, Chittagong.
Sen, Mahendra Lal ...	Kali Kanta Siromoni ...	Municipal Sanskrit tôl, Chittagong.
„ Surendra Kumar ...	Akhil Chandra Vidyaratna ...	Kuapara.
„ Surendra Mohan ...	Prasanna Kumar Chaudhuri ...	Dhalghat, Chittagong.
„ Satis Chandra Gupta ...	Kali Kinkar Smritibhushan ...	Khitapohar, Chittagong.

Name of successful candidate.	Name of teacher.	Place of tôl.
1	2	3

CHITTAGONG VIDYABINODINI SABHA—*concluded.*

KAVYA.

SECOND DIVISION.

Sen, Nalini Ranjan ...	Udaya Chandra Siromoni ...	M. E. School, Chittagong.
„ Prasanna Kumar ...	Nil Kamal Tarkaratna ...	Chandania tôl, Chittagong.

NYAYA.

SECOND DIVISION.

Vyakarantirtha, Bagala Charan ...	Sitanath Siddhantabagisa ...	Jagatpur Asram, Chittagong.

SANKHYA.

SECOND DIVISION.

Basu, Srimati Hemangini ...	Sitanath Siddhantabagisa ...	Jagatpur Asram, Chittagong.

BERHAMPUR PANDIT SABHA.

GRAMMAR.

FIRST DIVISION.

Kaviraj Dwarka Nath Sen ...	Gour Gopal Vidyaratna ...	Gayanath Chatuspathi, Murshidabad.
Ray, Tryambakeswar ..	Ditto ...	Ditto.

SECOND DIVISION.

Bhattacharyya, Kshitis Chandra	Ram Saran Vidyavagisa ..	Jubilee tôl, Berhampur.
„ Nagendra Kumar	Sitaram Nyayacharyya ...	Murshidabad.
„ Surendra Nath ...	Bhuban Mohan Vidyaratna ...	Saidabad, Murshidabad.
Chakravarti, Thakur Das ...	Sitaram Nyaya Charyya ...	Murshidabad.
Chaudhuri, Mrigendra Narayan Ray.	Gour Gopal Vidyaratna ...	Gayanath Chatuspathi, Murshidabad.
Chattopadhyaya, Basanta Kumar	Prabhat Chandra Kavyatirtha ...	Rampur Hât.
Das, Khudiram ...	Abinasa Chandra Vedantabhushan	Lalbagh.
Gupta Sen, Yoges Chandra ...	Ram Saran Vidyavagisa ...	Jubilee tôl, Berhampur.
Pati, Sri Krishna ...	Rasvehari Sankhyatirtha ...	Sadipur, Murshidabad.
Ray, Nani Gopal ...	Ditto ...	Ditto.

KAVYA.

FIRST DIVISION.

Chaudhuri, Narendra Narayan Ray.	Gour Gopal Vidyaratna ...	Gayanath Chatuspathi, Purulia.
Chakravarti, Thakur Das ...	Sitaram Nyayacharyya ...	Murshidabad.

MIMANSA.

SECOND DIVISION.

Bhattacharyya, Digindra Chandra	Durga Sundar Kaviratna ...	Berhampur Jubilee tôl.

Name of successful candidate.	Name of teacher.	Place of tôl.
1	2	3

COMILLA DHARMA SAMITI.

GRAMMAR.

First Division.

Bhattacharyya, Banga Chandra ...	Madhab Chandra Siddhantavagisa	Fultala.
,, Bijaya Kumar ...	Ratnagati Vidyavinode ...	Noadil.
,, Bisweswar ...	Kailas Chandra Vidyaratna ...	Nankora.
,, Harendra Chandra	Kula Chandra Siddhantabhushan	Machuakhal.
,, Madhusudan ...	Chandra Mohan Kavyavinode ...	Comilla.
,, Pratap Chandra	Kali Krishna Vidyabhushan ...	Chamita.
,, Sanatan ...	Madhab Chandra Siddhantavagisa	Fultala.
,, Sarada Kanta ...	Ratnagati Vidyavinode ...	Noadil.
,, Yogendra Kumar	Chandra Kanta Takaratna ...	Machuakhal.
Chakravarti, Bepin Chandra Thakur.	Chandra Kanta Tarkaratna ...	Ditto.
,, Purna Chandra ...	Kula Chandra Siddhantabhushan	Ditto.

Second Division.

Acharyya, Guru Charan ...	Chandra Kisore Nyayaratna ...	Sahapur, Tippera.
Bhattacharyya, Hari Mohan ...	Mahim Chandra Kavyanidhi ...	Jagatpur.
,, Kamini Kisore ..	Kali Krishna Vidyabhushan ...	Chamta.
,, Kumar Chandra ...	Ditto ...	Do.
Chakravarti, Aswini Kumar ...	Ambica Nath Kritiratna ...	Dadura.
,, Beni Madhav ...	Ditto ...	.....
,, Dwarka Nath ...	Ram Chandra Tarkasiddhanta ...	Balhara.
Chaudhuri, Yogesa Chandra ...	Kali Krishna Vidyabhushan ...	Chamta.
Ray, Surendra Chandra ...	Baikuntha Nath Tarkabhushan ...	Bangarah, Tippera.

NYAYA.

Second Division.

Bhattacharyya, Mahendra Kumar	Jagatbandhu Tarkatirtha ...	Aparanda.

NOAKHALI SUHRID SAMMILANI SABHA.

GRAMMAR.

First Division.

Chakravarti, Baikuntha Nath ...	Sarada Charan Vidyaratna ...	Sanachaka, Noakhali.
Mukhopadhyaya, Sanjiva Chandra	Ditto ...	Ditto.

Second Division.

Bhattacharyya, Ganesa Chandra	Sarada Charan Vidyaratna ...	Sonachaka.
,, Prasanna Kumar	Dina Bandhu Viyalankar ...	Babupur, Noakhali.
,, Tara Charan ...	Durga Charan Siddhantaratna ...	Debpara.
Biswas, Kailas Chandra ...	Ram Ram Nyayaratna ...	R. M. Chatuspathi, Dubalchand.
,, Tarak Chandra ...	Ditto ...	Ditto.
Chakravarti, Indra Kumar ...	Isan Chandra Tarkavagisa ...	Noakhali.
,, Udaya Chandra ...	Sarada Charan Vidyaratna ...	Sonachaka, Noakhali.
Sen, Annada Kumar ...	Bhairab Chandra Tarkabhushan	Chandirkara, Tippera.

SANKHYA.

First Division.

Gupta, Priya Nath Sen ...	Annada Charan Tarkachudamani	Noakhali.

Name of successful candidate.	Name of teacher	Place of tól.
1	2	3

RANI HEMANTA KUMARI SANSKRIT COLLEGE, RAJSHAHI, BOALIA.

GRAMMAR.

First Division.

Bandyopadhyaya, Ramnrisinha ...	Giris Chandra Vedantatirtha ...	Rani Hemanta Kumari Sanskrit College, Boalia.
Bhattacharyya, Ram Raman ...	Ditto ...	Ditto.
„ Surendra Nath ...	Ditto ...	Ditto.
Chakravarti, Pramatha Nath ...	Kasi Chandra Siromani ...	Puttia, Rajshahi.
Gantam, Ram Chandra ...	Giris Chandra Vedantatirtha ...	Rani Hementa Kumari Sanskrit College, Boalia.

Second Division.

Goswami, Gokul Bihari ...	Giris Chandra Vedantatirtha ...	Rani Hemanta Kumari Sanskrit College, Boalia.
Sen, Siddhartha ...	Abhilash Chandra Kavyatirtha ...	Boalia, Rajshahi.

KAVYA.

Second Division.

Talapatra, Haris Chandra ...	Abhilash Chandra Kavyatirtha	Rampur Boalia. Rajshahi.

SMRITI.

Second Division.

Bhattacharyya, Ramani Kanta ...	Bamandas Vidyaratna ...	Rani Hemanta Kumari Sanskrit College, Rajshahi.

CALCUTTA, SANSKRIT COLLEGE,
The 5th June 1905.

HARAPRASAD SHASTRI, M.A.,
Principal, Sanskrit College and Registrar, Sanskrit Examination.

RESULT OF THE SANSKRIT SECOND EXAMINATION, 1905.

Name of successful candidate.	Name of teacher.	Place of tól.
1	2	3
CALCUTTA PANDIT SABHA.		
(In alphabetical order.)		
FIRST DIVISION.		
GRAMMAR.		
Bandyapadhyaya, Kshetra Charan	Sarada Charan Smritibhushan ...	Tagore Sanskrit College, Mulajore.
Bhattacharyya, Barada Charan ...	Kali Krishna Smritiratna ...	Dhanyakuria.
,, Rakhaldas ...	Pelaram Vidyaratna ...	Karkai.
Gupta, Divakar ...	Asutosh Siroratna ...	Madhu Roy's Lane, Calcutta.
SECOND DIVISION.		
Bandyapadhyaya, Narendra Nath	Paresa Nath Kavyanidhi ...	Keotara, Burdwan.
Bhattacharyya, Asutosh ...	Pelaram Vidyaratna ...	Karkai.
,, Bhababibhuti ...	Sanskrit College ...	Calcutta.
,, Jagannath ...	Ditto ...	Do.
,, Kali Charan ...	Ramdas Siromani ...	Dasghara, Hooghly.
,, Lalit Mohan ...	Chandi Charan Kavyatirtha ...	11, Bosepara, Calcutta.
,, Nisi Kanta ...	Gopal Das Sastri ...	Nagerbazar, Dum-Dum.
,, Rangalal ...	Sanskrit College Title Class ...	Calcutta.
,, Yogendra Nath ...	Sita Nath Kaviratna ...	Kumarkhali, Nadia.
Chakravarti, Sarat Kumar ...	Bhuvaneswar Vidyalankar ...	23, Ram Kanta Basu's Lane, Calcutta.
Chattopadhyaya, Amrita Lal ...	Sarada Charan Smritibhushan ...	Tagore Sanskrit College, Mulajore.
,, Mohit Mohan ...	Yajneswar Vedantabhushan ...	Konnagor.
,, Prafulla Kumar	Kailas Chandra Smritiratna ...	16, Sibnarayan Das's Lane.
Chongdar, Bijaya Krishna ...	Kedar Nath Smritiratna ...	Kaligari, Hooghly.
Das, Sudhakar ...	Raghu Nath Misra ...	Narsinggar, Singhbhum.
Misra, Mohanlal ...	Yogi Jha ...	Bisuddhan Nanda Vidyalaya, Harrison Road.
Sarma, Dwarka Nath ...	Ditto ...	Ditto.
,, Rambadan ...	Ditto ...	Ditto.
,, Sitala Datta ..	Ditto ...	Ditto.
KAVYA.		
FIRST DIVISION.		
Acharyya, Dhiresa Chandra ...	Sanskrit Collegiate School ...	Calcutta.
Bhattacharyya, Batuk Nath ...	Ditto ...	Ditto.
,, Haripada ...	Sanskrit College, Title Class ...	Ditto.
,, Satis Chandra ...	Hara Chandra Tarkapanchanan	26, Prasanna Kumar Tagore Street, Calcutta.
Goswami, Kanailal ...	Surendra Nath Kavyatirtha ...	12, Lakshmi Narayan's Street, Calcutta.
Mukhopadhyaya, Bidhu Bhushan	Sanskrit College, Title Class ...	Calcutta.
SECOND DIVISION.		
Bandyopadhyaya, Dasarathi ...	Sanskrit Collegiate School ...	Calcutta.
,, Panchanan ...	Tarak Nath Smritiranjan ...	Hatibagan, Calcutta.
,, Sarada Prasanna	Private ...	.....
,, Satya Kinkar	Suryya Kumar Tarkabhushan ...	Mulajore, 24-Parganas.
Bhattacharyya, Dwarka Nath ...	Ditto ...	Ditto.
,, Gobind Chandra	Hera Nath Sastri ...	25, Nava Krishna's Street, Calcutta.

Name of successful candidate.	Name of teacher.	Place of tôl.
1	2	3
CALCUTTA PANDIT SABHA—*continued.*		
KAVYA—*concluded.*		
SECOND DIVISION—*concluded.*		
Bhattacharyya, Jagatbandhu ...	Durga Charan Vedantatirtha ...	Bhagvat Chatuspathi, Bhowanipur.
„ Krishna Chandra	Ditto ...	Ditto.
„ Kalipada ...	Bhubaneswar Vidyalanker ...	23, Ram Kanta Bose's Lane, Calcutta.
„ Rakhal Chandra	Janaki Nath Tarkaratna ...	Karkai, Midnapore.
„ Sitanath ...	Ananda Charan Tarkavagisa ...	Uttarpara.
„ Yogendra Mohan	Sanskrit College, Title Class ...	Calcutta.
„ Yogendra Nath	Hara Nath Sastri ...	25, Nava Krishna's Street, Calcutta.
Chakravarti, Kalipada ...	Bhubaneswar Vidyalanker ...	23, Ram Kanta Bose's Lane, Calcutta.
„ Manik Chandra ...	Sanskrit College, Title Class ...	Calcutta.
Chattopadhyaya, Surendra Nath	Asutosh Smrititirtha ...	Sangdia, Khulna.
Chaudhuri, Jitindra Nath Ray ...	Sanskrit Collegiate School ...	Calcutta.
Ghoshal, Durga Charan ...	Sanskrit Collegiate School ...	Ditto.
Gupta, Amritalal Das ...	Durga Charan Vedantatirtha ...	Bhagbat Chatuspathi, Bhawanipur, Calcutta.
„ Govinda Chandra Das ...	Suryya Kumar Tarkabhushan ...	Mulajore, 24-Parganas.
„ Surendra Mohan Das ...	Gopal Das Sastri ...	Nagerbazar, 24-Parganas.
„ Syama Charan ...	Bhubaneswar Vidyalanker ...	23, Ram Kanta Bose's Lane, Calcutta.
Misra, Devendra Nath ...	Surendra Nath Kavyatirtha ...	40, Phear's Lane, Calcutta.
„ Yugole Kisore ...	Sanskrit College, Title Class ...	Calcutta.
Mukhopadhyaya, Abhyapada ...	Tarak Nath Smritiranjan ...	Hatibagan, Calcutta.
Sarma, Dharma Kanta ...	Sanskrit College, Title Class ...	Calcutta.
SMRITI.		
SECOND DIVISION.		
Bhattacharyya, Barada Charan ...	.....	.....
„ Krishna Chandra	.....	.....
„ Ratindra Nath ...	Yogindra Smritibhushan ...	Halsibagan, Calcutta.
„ Suresa Chandra ...	Haris Chandra Tarkaratna ...	Mulajore, 24-Parganas.
Chakravarti, Chintaharan ...	Asutosh Smrititirtha ...	Sangdia, Khulna.
Gangopadhyaya, Kali Kanta ...	Haridas Vidyaratna ...	Uttarpara.
NYAYA.		
FIRST DIVISION.		
Mukhopadhyaya, Sadhu Charan...	Sanskrit College, Title Class ...	Calcutta.
SECOND DIVISION.		
Bhattacharyya, Navadas ...	Phanibhushan Tarkavagisa ...	Darsan tôl, Pabna.
„ Yadunath ...	Sanskrit College, Title Class ...	Calcutta.
Chakravarti, Surendra Nath ...	Ditto ...	Ditto.
Ojha, Navaratna ...	Ditto ...	Ditto.
SANKHYA.		
FIRST DIVISION.		
Sarma, Anandilal ...	Sanskrit College, Title Class ...	Calcutta.
PURAN.		
FIRST DIVISION.		
Chakravarti, Nirodvaran ...	Asutosh Vidyabhushan ...	Doctor's Lane, Calcutta.

Name of successful candidate.	Name teacher.	Place of tôl.
1	2	3

CALCUTTA PANDIT SABHA—*concluded.*

PURAN—*concluded.*

SECOND DIVISION.

Kavyatirtha, Tara Prasanna ...	Hara Chandra Tarkapanchanan	26, Prasanna Kumar Tagore's Street, Calcutta.

PARIKSHA SABHA, BHATPARA.

GRAMMAR.

FIRST DIVISION.

Goswami, Girija Kanta ...	Sarada Charan Smritibhushan ...	Mulajore, 24-Parganas.

SECOND DIVISION.

Bhattacharyya, Niranjan ...	Kasi Nath Vachaspati ...	Bhatpara.
„ Ramapati ...	Ditto ...	Ditto.
„ Sridhar ...	Kamal Krishna Smritibhushan ...	Ditto.
Chaudhuri, Kedar Nath ...	Gopal Chandra Kabyatirtha ...	Sahitya Chatuspathi, Pabna.

KAVYA.

SECOND DIVISION.

Bhaumic, Banamali ...	Gopal Chandra Kavyatirtha ...	Pabna.
Bhattacharyya, Dhurjati Prasad ...	Kasi Nath Vachaspati ...	Bhatpara.
„ Haran Chandra ...	Hara Nath Sastri	25, Nava Krishna Street, Calcutta.
„ Rajani Nath ...	Surya Kumar Tarkabhushan ...	Mulajore, 24-Parganas.
„ Ramsahay ...	Kasi Nath Vachaspati ...	Bhatpara.

SMRITI.

FIRST DIVISION.

Kavyatirtha, Ramranjan ...	Kamal Krishna Smritibhusan ...	Bhatpara.

SECOND DIVISION.

Bhattacharyya, Narayan Chandra	Bireswar Smrititirtha ...	Bhatpara.

NYAYA.

SECOND DIVISION.

Bhattacharyya, Annada Charan	Ram Krishna Nyayatarkatirtha...	Bhatpara.
„ Ram Krishna ...	Ditto	Ditto.

NAVADWIP BIBUDHA JANANI SABHA.,

GRAMMAR.

FIRST DIVISION.

Goswami, Nandagopal ...	Tara Prasanna Chudamani ...	Chaitanya Chatuspathi, Navadwip.

SECOND DIVISION.

Bhattacharyya, Amulyaratna ...	Mrityunjoy Smrititirtha ...	Goari, Nadia.
Sanyal, Nagendra Nath ...	Siti Kanta Vachaspati ...	Navadwip, Nadia.
Sen, Upananda	Tapaswi Vidyasagar ...	Dubalhati, Rajshahi.

KAVYA.

FIRST DIVISION.

Bandyopadhyaya, Haripada ...	Devendra Nath Smitiratna ...	Samudragarh, Burdwan.
Bhattacharyya, Rudra Nath ...	Siti Kanta Vachaspati ...	Navadwip.
„ Yatindra Narayan	Satis Chandra Smritibhusan ...	Musthali, Burdwan.

SECOND DIVISION.

Chakravarti, Akshay Kumar ...	Mritunjoy Smrititirtha ...	Goari, Nadia.
„ Bibhutis Chandra ...	Nitya Nanda Das	Srikhanda, Burdwan.
„ Bhuban Mohan ...	Tapaswi Vidyasagar... ...	Dubalhati, Rajshahi.

Name of successful candidate.	Name of teacher.	Place of tól.
1	2	3

NAVADWIP BEBUDHA JANANI SABHA—*concluded.*

SMRITI.

SECOND DIVISION.

Bandyapadhyaya, Yoges Chandra	Mrityunjay Smrititirtha ...	Goari, Nadia.
Bhattacharyya, Banamali ...	Siti Kanta Vachaspati ...	Navadwip.
„ Ram Charan ...	Devi Prasanna Smitibhushan ...	Belpukura, Nadia.
Kavyatirtha, Rohini Kanta	Siti Kantha Vachaspati ...	Navadwip.
Chakravarti, Narayan Chandra ...	Mrityunjay Smrititirtha ...	Goari, Nadia.
Mukhopadhyaya, Nivaran Chandra	Devi Prasanna Smritibhushan ...	Belpukuria, Nadia.
„ Syama Charan ...	Nrisinha Prasad Smritibhushan	Navadwip.
Putatunda, Gopal Chandra ...	Siti Kantha Vachaspati ...	Ditto.

NYAYA.

FIRST DIVISION.

Bhattacharyya, Rai Charan ...	Bisseswar Tarkaratna ...	Chaitnya Chatuspathi, Navadwip.
Kavyatirtha, Yadu Nath ...	Ram Krishna Tarkasastri ...	Navadwip.

SECOND DIVISION.

Adhikari, Binodbihari ...	Swami Sibgovinda Bharati ...	Navadwip.
Misra, Madhusudan ...	Yadu Nath Sarbabhauma ...	Ditto.

PURAN.

FIRST DIVISION.

Chakravarti, Kirti Chandra ...	Yogendra Nath Smrititirtha ...	Chaitnya Chatuspathi, Navadwip.
Goswami, Sukhamohan ...	Biseswar Tarkaratna ...	Navadwip.

SECOND DIVISION.

Goswami, Narottam	Swami Sibagovinda Bharati ...	Navadwip.
„ Rajendra Nath ...	Pyari Lal Bhagatbhusan ...	Ditto.
Thakur, Nrisinhabilas ...	Nityananda Das	Srikhanda, Burdwan.

SANSKRIT SAMITI, GHATAL.

GRAMMAR.

FIRST DIVISION.

Bhattacharyya, Ambica Charan ...	Amarendranath Bhattacharyya ...	Nahanda.
Chakravarti, Tarini Charan ...	Murari Mohan Kaviratna ...	Kisorepur.
Misra, Bhairabnath ...	Satrughna Vidyaratna ...	Mahajan.
Panigrahi, Bhubanchandra ...	Ditto ...	Ditto.
Pati, Baidyanath ...	Ambika Charan Nayayavagisa ...	Ramnarayan Chatuspathi, Midnapore.
„ Bansidhar ...	Ditto ...	Ditto.
Siddhanta, Bhimacharan ...	Amarendranath Bhattacharyya ...	Nahanda

SECOND DIVISION.

Acharyya, Bhushan Chandra	Aghorenath Kavyabhushan ...	Kalagacha.
Bhattacharyya, Dakshina Charan	Dwarkanath Nyayabhushan ...	Mugberia.
„ Dharanidhar ...	Ditto ...	Ditto.
„ Prafulla Chandra	Mahesa Chandra Basu ...	Pingla.
„ Ramendranath ...	Kusadhwaja Smritiratna ...	Tilda.
Chakravarti, Haripada ...	Bireswar Tarkatirtha	Baidyapur.
„ Nityagopal ...	Ambika Charan Nyayaratna ...	Ghoradaha, Bajhati, Hooghly.
Das, Sanyasi Charan ...	Avinas Chandra Kavyatirtha ...	Manikyaram Chatuspathi, Midnapore.

Name of successful candidate.	Name of teacher.	Place of tôl.
1	2	3

SANSKRIT SAMITI, GHATAL—*concluded.*

GRAMMAR—*concluded.*

SECOND DIVISION—*concluded.*

Ghatak, Ramanuja ...	Kirtichandra Vedantavagisa ...	Jaypur, Bankura.
Goswami, Benodevehari ...	Ramkamal Smritibhushan ...	Manikpur, Midnapore.
Misra, Bhutnath ...	Barada Kanta Nanda ...	Kesaidighi.
„ Sasibhushan ...	Sripati Charan Kavyatirtha ...	Panchisbatya, Midnapore.
„ Siva Prasad ...	Purushottom Vidyanidhi ...	Belyabera.
Nanda, Rajivlochan ...	Baradakanta Nanda ...	Kesaidighi.
„ Yajneswar ...	Murari Mohan Kaviratna. ...	Kisorepur, Midnapore.
Panchadyayi, Sridhar ...	Satrughna Vidyaratna ...	Mahajan.
Panda, Kali Kumar ...	Ditto ...	Ditto.
„ Kumud Bandhav ...	Dwarkanath Nyayabhushan ...	Mugberia.
„ Lakshman Chandra ...	Sridhar Chandra Siromani ...	Purushottampur.
„ Mahesa Chandra ...	Sripati Charan Kavyatirtha ...	Panchisbetya.
„ Sarada Charan ...	Sridhar Chandra Siromani ...	Purushottampur, Midnapore.
„ Surendra Nath ...	Lambodar Kavyathirtha ...	Basantia, Midnapore.
Panigrahi, Srivatsya Bhushan ...	Panchanan Nyayaratna ...	Paikbar.
Pati, Viswanath ...	Dhruvananda Nyayaratna ...	Depal, Midnapore.
Saranghee, Udayanath ...	Purushottam Vidyanidhi ...	Belyabera.
Tripathi, Kherode Nath ...	Brajamohan Vidyaratna ...	Dadpur, Midnapore.
„ Mrityunjaya ...	Abinas Chandra Kavyatirtha ...	Manikyaram, Chatuspathi, Midnapore.
„ Rakhal Chandra ...	Murari Mohan Kaviratna ...	Kisorepur, Midnapore.
Uthasin, Nilkantha ...	Gopal Chandra Kavyaratna ...	Rataneswarpur, 24-Parganas.

KAVYA.

FIRST DIVISION.

Das, Mayadhar ...	Purushottam Vidyanidhi ...	Belyabera.
Mukhopadhyay, Harendra Mohan	Private ...	Ditto.
Satpati, Ananda ...	Purushottam Vidyanidhi ...	Ditto.

SECOND DIVISION.

Acharyya, Harilal ...	Umes Chandra Vidyabhushan ...	Sunyakore.
Bandyopadhyaya, Mahitosh ...	Abinas Chandra Kavyatirtha ...	Manikyaram Chatuspathi, Midnapore.
Chakravarti, Narayan Chandra ...	Bamandas Kavyatirtha ...	Bara, Hooghly.
Goswami, Dev Krishna ...	Abinas Chandra Kavyatirtha ...	Manikyaram Chatuspathi, Midnapore.
Nanda, Bhuban Mohan ...	Abinas Chandra Kavyatirtha ...	Ditto.
„ Surendra Nath ...	Barada Kanta Nanda ...	Kesaidighi.
Satpati, Paramananda ...	Purushottam Vidyanidhi ...	Belyabera.
Tripathi, Beni Madhub ...	Ditto ...	Ditto.

SMRITI.

SECOND DIVISION.

Bhattacharyya, Asutosh ...	Ramkamal Smritibhushan ...	Manikpur, Midnapore.

SANKHYA.

SECOND DIVISION.

Tripathi, Digambar ...	Krishna Prasad Sankhyatirtha ...	Bhupatinagar.
Vyakarantirtha, Ramamrita ...	Srisa Chandra Tarkatirtha ...	Narajole.

Name of successful candidate.	Name of teacher.	Place of tôl.
1	2	3

BIJAY CENTRE, BURDWAN.

GRAMMAR.

First Division.

Bairagi, Dhirlalitdas ...	Jaynarayan Vidyanidhi ...	Balsi, Bankura.
Bhattacharyya, Banikanta ...	Rakhal Chandra Tarkatirtha ...	Searsole, Burdwan.
„ Mahadev ...	Sitanath Vedantasastri ...	Chinsura, Hooghly.
Chakravarti, Ramdurlabh ...	Sasibhushan Nayaratna ...	Ayodhya, Bankura.
Gupta, Rampada Das ...	Jaynarayan Vidyanidhi ...	Balsi, Bankura.
Mukhopadhyaya, Mohiniranjan ...	Ramtaran Smrititirtha ...	Hetampur, Birbhum.
„ Priyanath ...	Adyacharan Nyayaratna ...	Bijay Chatuspathi, Burdwan.

Second Division.

Bandyapadhyaya, Yatindramohan	Bholanath Smrititirtha ...	Paratal, Burdwan.
Bhattacharyya, Anukulchandra ...	Jaynarayan Vidyanidhi ...	Balsi, Bankura.
„ Rakhaldas ...	Satyanath Smrititirtha ...	Sridharpur, Burdwan.
„ Surendranath ...	Bholanath Smrititirtha ...	Paratal, Burdwan.
Chakravarti, Khudiram ...	Kesab Chandra Siromani ...	Harmasra, Bankura.
Chaudhuri, Kesabchandra ...	Jagadis Smritikantha ...	Tiluri, Bankura.
Kaviraj, Gurudas ...	Rambishnu Chudamoni ...	Bankulia, Bankura.
Gupta, Abhayacharan ...	Sachchitananda Kaviraj ...	Kakila, Bankura.
„ Anathbandhu Das ...	Jaynarayan Vidyanidhi ...	Balsi, Bankura.
„ Aswini Kumar ...	Harinath Vidantavagisa ...	Bijay Chatuspathi, Burdwan.
„ Karunamaya ...	Jaynarayan Vidyanidhi ...	Balsi, Bankura.
„ Ram Kinkar Sen ...	Ganes Chandra Kaviraj ...	Muraddi, Manbhum.
Mukhopadhyaya, Gopeswar ...	Harinath Vidantavagisa ...	Bijay Chatuspathi, Burdwan.
Pujari, Harinarayan ...	Jaynarayan Vidyanidhi ...	Balsi, Bankura.
Sen, Bankim Chandra ...	Ramvishnu Chudamani ...	Bankulia, Bankura.
„ Nalinaksha ...	Ditto ...	Ditto.
Thakur, Dinakar Mallik ...	Raghuram Siromani ...	Bishnupur, Bankura.
„ Satya Kinkar ...	Sitaram Tarkavagisa ...	Dirghanagar, Burdwan.

KAVYA.

First Division.

Bhattacharyya, Rampada ...	Rambrahma Tarkatirtha ...	Ghurisa, Birbhum.

Second Division.

Bhattacharyya, Purna Chandra ...	Rambrahma Tarkatirtha ...	Ghurisa, Birbhum.
„ Yogendra Nath ...	Jaynarayan Vidyanidhi ...	Balsi, Bankura.
Chakravarti, Lalmohan ...	Harinath Vidantavagisa ...	Bijay Chatuspathi, Burdwan.
Chattopadhyaya, Kalipada ...	Basanta Kumar Kavyatirtha ...	Indas, Bankura.
Mukhopadhyaya, Abhayacharan ...	Brajendra Kumar Vidyaratna ...	Bijay Chatuspathi, Burdwan.
„ Khudiram ...	Sasibhushan Siromoni ...	Abhaya Chatuspathi Gangatikuri, Burdwan.
Vyakarantirtha, Jaygovinda ...	Rajani Kanta Smritibhushan ...	Tilhuri, Bankura.

NYAYA.

First Division.

Mukhopadhyaya, Chandra Kanta	Adya Charan Tarkabhushan ...	Bijay Chatuspathi, Burdwan.

Second Division.

Bhattacharyya, Harsagopal ...	Adya Charan Tarkabushan ...	Bijay Chatuspathi, Burdwan.
Chattopadhyaya, Tarini Charan ...	Ditto ...	Ditto.

Name of successful candidate.	Name of teacher.	Place of tól.
1	2	3

BIJAY CENTRE, BURDWAN—*concluded.*

VEDANTA.

SECOND DIVISION.

Kavyatirtha, Ramsatya ...	Hari Nath Vidantavagisa ...	Bijay Chatuspathi, Burdwan.

UPANISHAD.

SECOND DIVISION.

Bhattacharyya, Rajani Kanta ...	Sitanath Vidantasastri ...	Biswanath Chatuspathi, Chinsura.
Kavyatirtha, Rames Chandra ...	Harinath Vidantavagisa ...	Bijay Chatuspathi, Burdwan.

SANKHYA.

SECOND DIVISION.

Nanda Sankara ...	Harinath Vidantavagisa ...	Bijay Chatuspathi, Burdwan.

PURAN.

SECOND DIVISION.

Smritikantha, Akshay Kumar ...	Surya Kumar Tarkasiddhanta ...	Barawa, Burdwan.

DHARMA SABHA, RANGPUR.

GRAMMAR.

SECOND DIVISION.

Bhattacharyya, Aswini Kumar ...	Krishnaratan Nyayaratna ...	Kaligram, Maldha.
„ Bisweswar ...	Harinarayan Smrititirtha ...	Bhabani Chatuspathi, Serpur, Bogra.
„ Rasadhar ...	Kailas Chandra Kavyatirtha ...	Kurigram, Rangpur.

KAVYA.

SECOND DIVISION.

Bhattacharyya, Yogendra Nath ...	Kailas Chandra Kavyatirtha ...	Kurigram, Rangpur.
Chaudhuri, Sures Chandra ...	Abhilas Chandra Sarvabhauma ...	Rampur Boalia.
Siddhanta, Sures Chandra ...	Krishna Chandra Ray ...	Tebai, Dinajpur.

SMRITI.

FIRST DIVISION.

Bhattacharyya, Sarat Kumar ...	Krishnaratna, Nyayaratna ...	Kaligram, Maldah.

PURAN.

FIRST DIVISION.

Ray, Gopimohan ...	Krishnaratna Nyayaratna ...	Kaligram, Maldah.

ARYA SAMMILANI SABHA, BAKLA.

GRAMMAR.

SECOND DIVISION.

Chakravarti, Baman Chandra ...	Lalitmohan Das Gupta ...	Goila, Barisal.

KAVYA.

FIRST DIVISION.

Naha, Bharat Chandra ...	Lalitmohan Das Gupta ...	Kavindra College, Goila.

Name of successful candidate.	Name of teacher.	Place of tól.
1	2	3

ARYA SAMMILANI SABHA, BAKLA—*concluded.*

KAVYA—*concluded.*

SECOND DIVISION.

Bhattacharyya, Krishna Kumar ...	Lalitmohan Das Gupta ...	Goila, Barisal.
Chakravarti, Sasi Kumar ...	Ditto ...	Ditto.
Gupta, Sasi Kanta ...	Ditto ..	Ditto.

SANKHYA.

SECOND DIVISION.

Chakravarti, Sriprasanna Thakur	Lalitmohan Das Gupta ...	Goila, Barisal.

DHARMARAKSHINI SABHA, BARISAL.

GRAMMAR.

SECOND DIVISION.

Gupta, Asutosh Das ...	Asutosh Kavyatirtha ...	Khalisakota, Barisal.
Ray, Basanta Kumar. ...	Ram Lal Smrititirtha ...	Sripur, Bangram, Khulna.

KAVYA.

SECOND DIVISION.

Gupta, Akshay Kumar ...	Biswambhar Smritiratna ...	Gurudas Chatuspathi, Narayanpur, Barisal.
„ Satindra Nath Das ...	Ditto ...	Ditto.

ARYA SIKSHA SAMITI, KOTWALIPARA.

GRAMMAR.

SECOND DIVISION.

Bhattacharyya, Hara Nath ...	Sasi Bhushan Smrititirtha ...	Amtali, Faridpur.
Chaudhuri, Annada Charan ...	Kali Kanta Siromani ...	Unasia, Faridpur.

KAVYA.

SECOND DIVISION.

Bhattacharyya, Kripa Nath ...	Aswini Kumar Smrititirtha ...	Lakharan, Dacca.
Chaudhuri, Taraprasanna	Kali Kanta Siromani ...	Unasia, Faridpur.
Gupta, Asutosh Das ...	Ditto ...	Ditto.
Thakur, Govinda Chandra ...	Ditto ...	Ditto.

HITAISHINI SABHA, IDILPUR.

GRAMMAR

SECOND DIVISION.

Bhattacharyya, Bhagabati Charan	Sib Charan Siddhantavagisa ...	Bajapti, Tippera.
„ Tripura Charan ...	Ditto ...	Ditto.
Chakravarti, Anangamohan ...	Annada Charan Vidyalankar ...	Mahabatpur, Tippera.
„ Durgamohan ..	Prasanna Kumar Vidynidhi ...	Bejnisar, Faridpur.
„ Sarat Chandra ...	Harimohan Kavyatirtha ...	Ganganagar, Faridpur.

Name of successful candidate.	Name of teacher.	Place of tôl.
1	2	3

HITAISHINI SABHA, IDILPUR—*concluded.*

SMRITI.

SECOND DIVISION.

Bhattacharyya, Krishna Chandra	Hara Chandra Tarkapanchanan...	Prasanna Kumar Tagore Street, Calcutta.

DHARMA SABHA, MYMENSINGH.

GRAMMAR.

FIRST DIVISION.

Bhattacharyya, Durgasundar ...	Guru Charan Smritiratna ...	Katebali, Mymensingh.

SECOND DIVISION.

Bhattacharyya, Krishnanath ...	Sib Chandra Kavyatirtha ...	Mymensingh.
Chakravarti, Jyotis Chandra ...	Sasi Kumar Vidyabhushan ..	Sheri, Mymensingh.

KAVYA.

SECOND DIVISION.

Bhattacharyya, Upendra Chandra	Sasi Kumar Vidyabhushan ...	Sheri, Mymensingh.
Gupta, Sudhansubhushan ...	Ganga Charan Vidyanidhi ...	Mymensingh.

SMRITI.

SECOND DIVISION.

Chakravarti, Iswar Chandra ...	Hara Sundar Tarkaratna ...	Sheri, Mymensingh.

NYAYA.

SECOND DIVISION.

Bagchi, Yogendra Nath ...	Gopal Nath Tarkatirtha ...	Sherpur, Mymensingh.

DACCA.

GRAMMAR.

SECOND DIVISION.

Bhattacharyya, Devendra Nath ...	Sasi Bhushan Smrititirtha ...	Amtali, Faridpur.
,, Jagadis Nath ...	Kali Chandra Vidyabhushan ...	Murapara, Dacca.
,, Purna Chandra ...	Ditto ...	Ditto.
,, Upendra Nath ...	Dina Nath Vidyavagisa ...	Dhalchattra, Dacca.
,, Satis Chandra ...	Kali Chandra Vidyabhushan ...	Murapara, Dacca.
Das, Radhagovinda ...	Kailas Chandra Vidyabhushan	Amtali, Dacca.
Gupta, Rakhal Bihari Sen ...	Upendra Nath Siddhantavagisa	Pachchar, Faridpur.
Goswami, Bridaban Chandra ...	Satis Chandra Kavyatirtha ...	Jindabad, Dacca.

KAVYA.

SECOND DIVISION.

Bhattacharyya, Durga Nath ...	Nil Kamal Vidyanidhi ...	Medinimandal, Dacca.
,, Radharaman ...	Tara Nath Tarkavachaspati ...	Kusiara, Tippera.
Chakravarti, Nilambar ...	Ditto ...	Ditto.
Ghosh, Kamini Kumar ...	Krishna Kumar Vidyaratna ...	Rawili, Dacca.

SMRITI.

SECOND DIVISION.

Bhattacharyya, Satis Chandra ...	Sasi Bhushan Smritibhushan ...	Ichapura, Dacca.

Name of successful candidate.	Name of teacher.	Place of tól.
1	2	3

DACCA—*concluded.*

PURAN.

SECOND DIVISION.

Mukhati, Harendra Chandra	...	Mahendra Chandra Kavyatirtha	Panchasar, Dacca.

SANSKRIT ASSOCIATION, BINNAFAIR.

GRAMMAR.

SECOND DIVISION.

Bhattacharyya, Surendra Nath	...	Kedar Nath Kavyatirtha	... Tangail, Mymensingh.
Chakravarti, Isan Chandra	...	Janardan Smrititirtha	... Kowakhola, Pabna.

KAVYA.

SECOND DIVISION.

Adhikari, Nikunja Bihari	...	Janardan Smritiratna	... Kowakhola, Pabna.

BEHAR SANSKRIT SANJIVAN, BANKIPUR CENTRE.

GRAMMAR.

FIRST DIVISION.

Mahapatra, Ramchandra	...	Basdeo Tripathi	... Ahiyabat, Benares.

SECOND DIVISION.

Avasti, Ramdatta	...	Ramchiz Pandeya	... Majhaoan.
Dwivedi, Chandrahas	...	Sarvananda Tripathi	... Pramode Vidyalaya, Chapra.
„ Krishnanath	...	Gayadatta Tripathi	... Bhagvat Vidyalaya, Ayodhya.

SECOND DIVISION.

Misra, Brajanath	...	Jayadeva Misra	... Benares.
„ Lokenath	...	Ramnandan Misra	... Buxar.
„ Ramdahin	...	Chandra Sekharprasad Sarma	... Tikari.
Ojha, Dharmadatta	...	Ram Sastri	... Benares.
Pathak, Pitambar	...	Krishnasastri (Bharadwaj)	... Golagali, Benares.
Vyas, Purushottam	...	Mahadev Sastri	... Benares.
Sarma, Badrinath	...	Kharagnath Misra	... Parmangor, Purnea.
Sastri, Subrahmanya	...	Ramavatar Tripathi	... Rajpur, Mirzapur.
Tripathi, Lakshman	...	Basudev Tripathi	... Ahiyabat, Benares.
„ Rajaram	...	Ramapati Misra	... Benares.
„ Ramratna	...	Krishna Sastri, Bharadwaj	... Golagali, Benares.

KAVYA.

SECOND DIVISION.

Bhatta, Govardhan	...	Sarvananda Tripathi	... Pramode Vedyalaya, Chapra.
Bhattacharyya, Chintamani	...	Yadaveswar Tarkaratna	... Rangpur.
„ Kamininath	...	Ditto	... Ditto.
Dikshit, Gopal	...	Mahadevdatta Tripathi	... Hatwa, Saran.
Dwivedi, Sivaprasad	...	Bhagvat Acharyya	... Government Sanskrit College, Benares.
Misra, Bankevihari	...	Ganapate Misra	... Arrah.
„ Bhagbati Prasad	...	Sarvananda Tripathi	... Promode Vedyalaya, Chapra.
„ Bhaktinath	...	Ramlochan Pandit	... Raghupur Bihta, Patna.

Name of successful candidate.	Name of teacher.	Place of tôl.
1	2	3

BEHAR SANSKRIT SANJIVAN, BANKIPUR CENTRE—*concluded.*

KAVYA—*concluded.*

SECOND DIVISION—*concluded.*

Misra, Chandrikadatta ...	Ram Sastri ...	Benares.
„ Madanmohan ...	Ramlal Misra ...	Hariharpur, Palamau.
„ Ramprasad ...	Sobhanath Pathak ...	Gaya.
Pandeya, Abadhvehari ...	Ramasraya Trivedi ...	Amnour, Saran.
Pathak, Raghunandan ...	Devdatta Misra ...	Brajabhushan Kharkhewaka Pathsala, Gaya.
Tripathi, Saligram ...	Jagannathprasad Sarma ...	Charkhari.
Upadhyaya, Bindeswariprasad ...	Ganapati Misra ...	Arrah.

SMRITI.

SECOND DIVISION.

Tripathi, Basantaram ...	Ramchik Pandeya ...	Majhiwan.

NYAYA.

SECOND DIVISION.

Misra, Govindaprasad ...	Umanath Misra ...	Sajivan Vidyalaya, Tikari.

SANKHYA.

SECOND DIVISION.

Jha, Tejnarayan ...	Harihar Nayacharyya ...	Mansuk Ray's Ptahsala, Patna.

UPANISHAD.

SECOND DIVISION.

Misra, Ramnarayan ...	Sarvananda Tripathi ...	Chapra.

PURAN.

SECOND DIVISION.

Sarma, Gangadhar ...	Sobhanath Pathak ...	Gaya.

JYOTISH.

SECOND DIVISION.

Misra, Balbuaji ...	Dinanath Misra ...	Benares College.

BIHAR SANSKRIT SANJIVAN, DARBHANGA.

GRAMMAR.

SECOND DIVISION.

Chaudhuri, Kesab	Hari Sankar Jha	Tharhi, Darbhanga.
Jha, Gouri Nath	Jaynath Singh	Bhour, Darbhanga.
„ Mahavir	Ratneswar Jha	Manus Bipatpahi tôl-Manigachi, Darbhanga.
„ Mani	Nirsan Misra	Rajnagar, Darbhanga.
„ Vishnu Lal	Hari Sankar Jha	Tharhi, Darbhanga.
Kumur, Nandipati	Ram Lal Jha	Aktearpur.
Misra, Mahavir	Nirsan Misra	Rajnagar, Darbhanga.
„ Yadunath	Lokenath Jha	Ganganli, Darbhanga.
Sarma, Biswambhardatta ...	Mukunda Jha	Haripur, Darbhanga.
„ Vishnu Lal	Hari Sankar Jha	Tharhi, Darbhanga.

Name of successful candidate.	Name of teacher.	Place of tól.
1	2	3

BIHAR SANSKRIT SANJIVAN, DARBHANGA—*concluded.*

KAVYA.

SECOND DIVISION.

Jha, Gadadhar	Hari Sankar Jha	Tharhi, Jhanjharpur, Darbhanga.
Thakur, Mahabir	Nirsan Misra	Rajnagar, Darbhanga.

NYAYA.

SECOND DIVISION.

Misra, Balkrishna	Loke Nath Jha	Gangauli, Darbhanga.

MIMANSA.

SECOND DIVISION.

Goswami, Sachhidananda ...	M. M. U. Chitradhar Misra ...	Darbhanga.
Jha, Jateswar	Ditto ...	Ditto.

JYOTISH.

SECOND DIVISION.

Jha, Dayananda	Genalal Chaudhuri	Akhtearpur, Darbhanga.
Misra, Arjjun	Ditto	Ditto.
„ Srikrishna	Ditto	Ditto.

BIHAR SANSKRIT SANJIVAN, BHAGALPUR.

JYOTISH.

SECOND DIVISION.

Jha, Garibnath	Bathan Jha	Kharnagarh, Bhagalpur.

PURAN.

SECOND DIVISION.

Misra, Muktamani	.....	.....

BIHAR SANSKRIT SANJIVAN, MUZAFFARPUR CENTRE.

GRAMMAR.

FIRST DIVISION.

Misra, Trilokenath	Biswesswar Prasad Avasti ...	Matihari.
„ Vindeswari Prasad ...	Ditto. ...	Ditto.

VIDYOTSHAHINI SABHA, NARAIL.

GRAMMAR.

FIRST DIVISION.

Bhattacharyya, Surendranath ...	Dev Nath Smritititirtha ...	Daulatpur, Khulna.
Upadhyaya, Abani Kanta ...	Gopal Chandra Smritititirtha ...	Baruikhali, Jessore.

SECOND DIVISION.

Bhattacharyya, Satis Chandra ...	Gopal Chandra Smritititirtha ...	Baruikhali, Jessore.
Mukhopadhyaya, Haripada ...	Umanath Smritisiromani ...	Brahmanrangdia, Khulna.
Ray, Yogendra Nath ...	Pran Krishna, Smritititirtha ...	Korakdi, Faridpur.

Name of successful candidate.	Name of teacher.	Place of tôl.
1	2	3

VIDYOTSAHINI SABHA, NARAIL—*concluded.*

KAVYA.

SECOND DIVISION.

Baumic, Ambica Charan ...	Yadunath Kavyatirtha ...	Senhati, Khulna.
Bhattacharyya, Amritalal ...	Asutosh Smritiratna ...	Piljang, Khulna.
„ Hem Chandra ...	Gopal Chandra Smrititirtha ...	Baruikhali, Jessore.
„ Ram Charan ...	Ditto ...	Ditto
„ Surendra Nath ...	Brajendra Nath Smrititirtha ...	Mahespur, Jessore.
Chakravarti, Ganga Charan ...	Sachindra Nath Sankhyatirtha ...	Fukura, Faridpur.
„ Satis Chandra ...	Gopal Chandra Smrititirtha ...	Baruikhali, Jessore.

SMRITI.

FIRST DIVISION.

Bhattacharyya, Annada Charan...	Asutosh Smrititirtha ...	Piljang, Khulna.
Ghoshal, Panchanan, M.A. ...	Deb Nath Smrititirtha ...	Daulatpur, Khulna.

SECOND DIVISION.

Chakravarti, Kedareswar ...	Asutosh Smritiratna ...	Piljang, Khulna.
„ Tarakeswar ...	Prankrisna Smrititirtha ...	Korakdi, Faridpur.

MIMANSA.

SECOND DIVISION.

Bhattacharyya, Nepal Chandra ...	Debnath Smritiratna ...	Daulatpur, Khulna.

UPANISHAD.

SECOND DIVISION.

Chakravarti, Nakuleswar ...	Umanath Smritisiromani ...	Brahman rangdia, Khulna.

JAGANNATH SAMITI, PURI.

GRAMMAR.

SECOND DIVISION.

Acharyya, Raghu Nath ...	Gadadhar Tripathi	Raghunandan tôl, Puri.
Hota, Jagan Nath	Baidya Nath Misra... ...	Sanskrit School, Puri.
Misra, Narayan	Gadadhar Tripathi	Raghunandan tôl, Puri.
„ Ram Chandra ...	Baidya Nath Misra... ...	Sanskrit School, Puri.
„ Upendra	Biswa Nath Mahapatra ...	Biswanath tôl, Puri
Mahapatra, Jagannath ...	Kulamani Misra	Sriramchandrapur, Puri.

KAVYA.

FIRST DIVISION.

Mahapatra, Some Nath ...	Gopi Nath Sarangi	Ramchandra tôl, Puri.

SECOND DIVISION.

Acharyya, Kanhu Charan ...	Yogendra Kavyavisharad ...	Sanskrit School, Puri.
Misra, Banamali	Ditto ...	Ditto.
Rath, Jagannath	Ditto ...	Ditto.
Satpati, Govinda	Gadadhar Tripathi ...	Raghunandan tôl, Puri.

NYAYA.

SECOND DIVISION.

Mahapatra, Ram Chandra ...	Jagan Nath Misra	Sanskrit School, Puri.

Name of successful candidate.	Name of teacher.	Place of tôl.
1	2	3

ORISSA SANSKRIT SAMITI, CUTTACK.

GRAMMAR.

First Division.

Rath, Gopi Nath	Yameswar Kavyatirtha ...	Baldevji, Cuttack.

Second Division.

Das, Uday Nath	Srinath Bhattacharyya ...	Punang, Cuttack.
Misra, Bhikhari	Yameswar Kavyatirtha ...	Baldevji, Cuttack.
,, Kalpataru	Trilochan Kavyatirtha ...	Dhenkanal, Gurjat.
Mahapatra, Baidhar	Yameswar Misra	Baldevji, Cuttack.

KAVYA.

Second Division.

Acharyya, Bauribandhu ...	Yameswar Kavyatirtha ...	Baldevji, Cuttack.
,, Pran Krishna ...	Ditto ...	Ditto.
Kar, Mayadhar	Some Nath Kavyatirtha ...	Saraswat, Cuttack.
Misra, Balaram	Uma Nath Misra	Sridhar, Cuttack.
,, Bhagirathi	Siddheswar Tarkasiddhanta ...	Jubraj, Cuttack.
,, Hari Krishna ...	Yameswar Kavyatirtha ...	Baldevji, Cuttack.
Rath, Srinath	Ditto ...	Ditto.

SMRITI.

First Division.

Mahapatra, Ram Chandra ...	Mukunda Kavyatirtha ...	Padmanabha, Cuttack.

Second Division.

Pani, Gangadhar	Ananta Vidyabhushan ...	Padmanabha, Cuttack.

YAJURVEDA.

Second Division.

Misra, Damodar	Mukunda Kavyatirtha ...	Padmanabha, Cuttack.

BALASORE SANSKRIT SAMITI.

GRAMMAR.

First Division.

Dwivedi, Kasi Nath ...	Kirtivas Nyaratna ...	Amarda tôl, Balasore.
Misra, Radhakrishna ...	Mayadhar Tarkapanchanan ...	Bharate tôl, Irda Balasore.

Second Division.

Acharyya, Basudev ...	Yajneswar Kavyatirtha ...	Kundai tôl, Balasore.
,, Jagan Nath ...	Loknath Kavyatirtha ...	Baikuntha Nath tôl, Kaligram, Balasore.
Das, Sridhar ...	Mahendranath Smritiratna ...	Dehurda tôl.
Dwivedi, Bhagvat ...	Haladhar Misra ...	Hirak Jubilee tôl, Anandapur, Cuttack.
Kar, Jagannath ...	Artatram Kaviratna ...	Sri Ram Chandra tôl, Balasore.
Mahapatra, Gangadhar ...	Kirtivas Nyayaratna ...	Amarda tôl, Balasore.
Misra, Damodar ...	Artatram Kaviratna ...	Sri Ram Chandra tôl, Balasore.
,, Nilambar ...	Haladhar Misra ...	Hirak Jubilee tôl, Anandapur, Cuttack.

Name of successful candidate.	Name of teacher.	Place of tôl.
1	2	3

BALASORE SANSKRIT SAMITI—*concluded.*

GRAMMAR—*concluded.*

SECOND DIVISION—*concluded.*

Misra, Pitambar ...	Kirtivas Nyayaratna ...	Amarda tôl, Balasore.
Panda, Gangadhar ...	Mahendra Nath Smritiratna ...	Dehurda tôl, Balasore.
„ Lakshminarayan ...	Artatran Kaviratna ...	Sri Ram Chandra tôl, Balasore.
„ Narasinha ..	Aniruddha Kavyatirtha ...	Ganapati tôl.
Satpati, Ghanesyam ...	Kirtivas Nyaratna ...	Amarda tôl, Balasore.
Udgata, Muralidhar ...	Aniruddha Saranghi ...	Ganeswarpur tôl, Balasore.

KAVYA.

SECOND DIVISION.

Praharaj Chaudhuri Ramnarayan Mandhata.	Mayadhar Tarkapanchanan ...	Bharati tôl, Irda.
Rath Jagan Nath ...	Kalicharan Kavyatirtha ...	Sri Ram Chandra tôl, Balasore.
Satpati, Govinda ...	Mayadhar Tarkapanchanan ...	Bharati tôl, Irda.

VIDYANINODINI SABHA, CHITTAGONG.

GRAMMAR.

SECOND DIVISION.

Chakravarti, Gangadhar ...	Prasanna Kumar Chaudhuri ...	Dhalghat, Chittagong.
Chaudhuri, Surendra Kumar ...	Sitanath Siddhantavagisa ...	Jagatpur Asram, Chittagong.

KAVYA.

SECOND DIVISION.

Bhattacharyya, Kasiswar ...	Syama Charan Smritiratna ...	Patya, Chittagong.
Chaudhuri, Purna Chandra ...	Purna Chandra Chaudhuri ...	Kharandwip, Chittagong.
„ Revatiraman ...	Uday Chandra Siromani ...	High School, Chittagong.

SMRITI.

SECOND DIVISION.

Bhattacharyya, Nanda Kumar ...	Kali Kanta Smritibhushan ...	Bhatikhain, Chittagong.

SANKHYA.

FIRST DIVISION.

Vyakarantirtha, Srimati Basanti...	Sitanath Vedantavagisa ...	Jagatpur Asram, Chittagong.

PANDIT SABHA, BERHAMPUR.

GRAMMAR.

SECOND DIVISION.

Bhattacharyya, Sarat Chandra ...	Panchanan Smritiratna ...	Jamna, Murshidabad.
Gupta, Krishna Kumar Sen ..	Gaurgopal Vidyaratna ...	Gayanath Chatuspathi, Purulia.

Name of successful candidate.	Name of teacher.	Place of tôl.
1	2	3

PANDIT SABHA, BERHAMPUR—*concluded.*

GRAMMAR—*concluded.*

SECOND DIVISION—*concluded.*

Mukhopadhyaya, Kumaris Chandra.	Panchanan Smritiratna ...	Jamua, Murshidabad.

KAVYA.

SECOND DIVISION.

Bhattacharyya, Ram Das ...	Pasupati Nath Sastri ...	Kasimbazar, Murshidabad.
Chakravarti, Hara Kumar ...	Ram Saran Vidyavagisa ...	Jubilee tôl, Berhampur.
Sen, Janaki Nath	Gaurgopal Vidyaratna ...	Gayanath Chatuspathi, Parulia.

SMRITI.

FIRST DIVISION.

Mukhopadhyaya, Rammaya ...	Durga Sundar Kritiratna ...	Jubilee tôl, Berhampur.

SECOND DIVISION.

Bhattacharyya, Surendra Nath ...	Durga Sundar Kritiratna ...	Jubilee tôl, Berhampur.

SANKHYA.

FIRST DIVISION.

Bandyopadhyaya, Nitya Gopal ...	Annada Charan Vedantaratna ..	Jubilee tôl, Berhampur.

DHARMA SAMITI, COMILLA.

GRAMMAR.

SECOND DIVISION.

Adhikari, Rajani Kanta ...	Chandra Kanta Tarkaratna ...	Masuakhal, Tippera.
Bhattacharyya, Annada Charan...	Chandra Kisore Nyayaratna ...	Sahapur, Tippera.
„ Harimohan ...	Ditto ...	Ditto
„ Satis Chandra ...	Nabin Chandra Dharma Sastri ...	Khoria, Sylhet.
Chakravarti, Syama Charan ...	Kali Kinkar Vidyabhushan.	Chimta, Tippera.

KAVYA.

SECOND DIVISION.

Chaudhuri, Kaminiranjan ...	Chandra Mohan Kavyavinode ...	Comilla.

SUHRID SAMMILANI SABHA, NOAKHALI.

GRAMMAR.

SECOND DIVISION.

Bhattacharyya, Guru Prasanna ...	Dinabandhu Vidyalankar ...	Babupur, Noakhali.
„ Sarada Kumar ...	Krishna Kamal Tarkaratna ...	Purvasomeparra, Noakhali.
„ Sarvananda ...	Sarada Charan Vidyaratna ...	Sonachaka, Noakhali.
Biswas, Bipin Chandra ...	Ditto ...	Ditto.
Chakravarti, Surendra Chandra ..	Ditto ...	Ditto.

KAVYA.

SECOND DIVISION.

Bhattacharyya, Guru Charan ...	Annada Charan Tarkachudamani	Noakhali.
Datta, Kali Prasanna ...	Ditto ...	Ditto

Name of successful candidate.	Name of teacher.	Place of tôl.
1	2	3
RANI HEMANTA KUMARI SANSKRIT COLLEGE, RAJSHAHI.		
KAVYA.		
SECOND DIVISION.		
Bhattacharyya, Dinabandhu ...	Giris Chandra Vedantatirtha ...	Rani Hemanta Kumari Sanskrit College, Rajshahi.
,, Jagadis ...	Ditto ..	Ditto.
Gupta, Charu Chandra Sen ...	Ditto ...	Ditto.
SANKHYA.		
SECOND DIVISION.		
Bhattacharyya, Bipin Chandra ...	Guru Charan Tarkadarsantirtha	Rani Hemanta Kumari Sanskrit College, Rajshahi.

One stipend of Rs. 6 and two of Rs. 4 each are to be awarded to students who wish to prosecute their studies in the Vedas in the Government Sanskrit College, Calcutta.

The candidates who passed the First or Second examination may apply for these stipends on or before the 1st July 1905.

SANSKRIT COLLEGE,

The 6th May 1905.

HARAPRASAD SHASTRI, M.A.,

Principal, Sanskrit College, and Registrar, Sanskrit Examinations.

NOTICE.

COMMERCIAL CLASSES IN THE PRESIDENCY COLLEGE.

DAY classes in the following subjects will be opened in the College on the 27th June 1905:—

1. English (modern), especially English correspondence, including Commercial correspondence, letter-drafting and précis-writing.
2. Arithmetic, including Commercial and Mental Arithmetic.
3. Book-keeping, Short-hand and Type-writing.
4. Commercial History and Geography.
5. Bengali, especially Commercial correspondence, letter-writing, précis-writing and translation.

All will be admitted to the Day classes who have passed the School Final or the Entrance Examination or who are able to satisfy the Education Department by passing a simple preliminary test examination.

There is no age limit.

The fee for the Day classes is Rs. 3 a month.

P. K. RAY,

Offg. Principal, Presidency College.

PRESIDENCY COLLEGE, CALCUTTA, *the 8th March 1905.*

NOTICE.

EVENING classes in the following subjects will be opened in the College on the 27th June next:—

1. Banking and Currency.
2. Commercial and Industrial Law.
3. Book-keeping.
4. Short-hand.
5. Type-writing.

Candidates who have attended the lectures in the day course will be eligible for admission to the Evening course, but others will be admitted if they satisfy the Education Department by passing a simple preliminary test examination.

There is no age limit.

The fee is Rs. 3 for each series of fifteen lectures in the evening course on—

1. Banking and Currency; and
2. Commercial and Industrial Law;

and Rs. 10 for each course of lectures on—

1. Book-keeping.
2. Short-hand; and
3. Type-writing.

P. K. RAY,
Offg. Principal, Presy. College.

PRESY. COLLEGE, CALCUTTA, *the 15th May 1905.*

NOTIFICATIONS OF THE BOARD OF REVENUE.

No. 3593½B.

NOTICE is hereby given that the Seventh Sale of Opium, the Provision of 1902-1903, will be held at the Government Opium Sale-room, No. 2 Bankshall Street, on Tuesday, the 4th July 1905, at 11 A.M., and will comprise 4,000 chests, viz.—

	Chests.
Opium manufactured at the Patna Factory, consisting of ...	2,000
Ditto at the Ghazipur Factory, consisting of ...	2,000
Total ...	4,000

2nd.—The general conditions of the sale now advertised will be the same as usual. They may be ascertained by reference to the notification issued on the 22nd November 1904 and published in the *Government* and *Exchange Gazettes*, or on personal application at the office of the Board of Revenue.

3rd.—The latest dates for deposit and clearance will be the 10th and 19th July 1905, respectively, that is to say, no Bank of Bengal Receipts, Government Promissory Notes or other Public Securities that may be tendered for deposit in redemption of Promissory Notes given by purchasers in the sale-room will be received after 3-30 P.M. of Monday, the 10th July 1905, and no Bank of Bengal Receipts in full payment of lots will be accepted after 3-30 P.M. of Wednesday, the 19th July 1905.

4th.—In addition to the quantity above advertised for sale, the following quantities, more or less, of the opium manufactured at the Patna and Ghazipur Factories will be brought to sale between the sale now advertised and December next on or about the dates specified below. The Board of Revenue, however, reserve to themselves the right of altering these dates, should circumstances render it expedient to do so:—

DATES.	Manufactured at the Patna Factory; about chests.	Manufactured at the Ghazipur Factory; about chests.	Total; about chests.
On or about Tuesday, 1st August 1905 ...	2,000	2,000	4,000
On or about Tuesday, 5th September ,, ...	2,000	2,000	4,000
On or about Tuesday, 26th September ,, ...	2,000	2,000	4,000
On or about Wednesday, 1st November ,, ...	2,000	2,000	4,000
On or about Tuesday, 5th December ,, ...	2,000	2,000	4,000
Total ...	10,000	10,000	20,000

By order of the Board of Revenue, L. P.,

H. F. SAMMAN, *Offg. Secretary.*

BOARD OF REVENUE, L. P., CALCUTTA, *the 27th May 1905.*

ELECTION OF MUNICIPAL COMMISSIONERS.

NOTIFICATION.

IT is hereby notified for general information that at the bye-election held under section 27 of Act III (B.C.) of 1884, on Monday, the 15th May 1905, Babu Binoy Kumar Ray has been elected a Commissioner for Ward No. I of the Pabna Municipality, in the district of Pabna, *vice* Revd. Panchanan Biswas, who has resigned.

C. R. MARINDIN, *Commissioner.*

COMMR.'S OFFICE, RAJSHAHI DIVN., DARJEELING, *the 1st June 1905.*

NOTIFICATION.

IT is hereby notified for general information that a bye-election will be held on Friday, the 30th June 1905, under section 27 of the Bengal Municipal Act III (B C.) of 1884 as amended by Act IV (B.C.) of 1894 in Ward No. IV of the Dinapur Municipality, in the district of Patna, for the election of a Commissioner for that Ward in the place of Babu Rameshur Dayal.

C. R. MARRIOTT, *Addl. Commissioner.*

PATNA COMMR.'S OFFICE, *Bankipore, the 5th June 1905.*

NOTIFICATION.

IT is hereby notified for general information that under section 6 (*c*) of the Bengal Ferries Act, I of 1885, a new public ferry, to be called the Patkapara Ferry, over the river Kaljani within the Alipur subdivision of the district of Jalpaiguri, is established.

It is also directed that the said ferry shall be managed by the District Board of Jalpaiguri, and that all the proceeds of the ferry and all the fines levied and compensation received under the aforesaid Act in respect thereof shall be paid into the District Fund.

C. R. MARINDIN, *Commissioner.*

COMMR.'S OFFICE, RAJSHAHI DIVN., DARJEELING, *the 1st June 1905.*

NOTIFICATION.

IT is hereby notified for general information that, under Rule 21 (*b*) of the Manual of Rules for the management of Charitable Hospitals and Dispensaries in Bengal, the following gentlemen are appointed to be members of the Committee for the management of the Charitable Dispensary at Sadar, in the district of Bogra:—

1. J. N. Gupta, Esq., I.C.S. | 2. Babu Jatindra Nath Palit.

C. R. MARINDIN, *Commissioner.*

COMMR.'S OFFICE, RAJSHAHI DIVN., DARJEELING, *the 1st June 1905.*

NOTIFICATION.

IT is hereby notified for general information that, under rule 21 (*b*) of the Manual of Rules for the management of Charitable Hospitals and Dispensaries in Bengal, the following gentlemen are appointed to be additional members of the Committee for the management of the Charitable Dispensary at Sadar (Nawabgunge) in the district of Rangpur :—

(1) The District Engineer, Rangpur ... ... } *Ex-officio.*
(2) Sub-Judge of Rangpur ... ... } *Ex-officio.*
(3) Maulvi Asaf Khan, Rangpur.

C. R. MARINDIN, *Commissioner.*

COMMR.'S OFFICE, RAJSHAHI DIVN., *dated Darjeeling, the 24th May 1905.*

NOTIFICATION.

IT is hereby notified for general information that, under rule 21 (*b*) of the revised Dispensary Manual, Babu Sharada Prosad is appointed to be a member of the Committee for the management of the Colgong Charitable Dispensary in the district of Bhagalpur, *vice* Babu Onukul Ganguli, resigned.

BASANTA K. BOSE, for *Commissioner.*

COMMR.'S OFFICE, BHAGALPUR, *the 30th May 1905.*

NOTIFICATION.

IT is hereby notified for general information that Babu Atul Chandra Batabaya Munsif of the 2nd Court, Lakhipore, has been appointed, under rule 21 (*b*) of the Rules for the management of Hospitals and Charitable Dispensaries, to be a member of the Managing Committee for the Lakhipore Dispensary under the District Board of Noakhali, *vice* Babu Girish Chandra Sen, deceased.

W. MAUDF, *Offg. Commissioner.*

Chittagong, the 30th May 1905.

The Calcutta Gazette.

WEDNESDAY, JUNE 7, 1905.

PART I A.

Orders and Notifications by the Government of India, &c

[*Reprinted from the "Gazette of India."*]

The following orders, issued by the Government of India in the Finance Department, are republished for general information.

R. W. CARLYLE,
Offg. Chief Secy. to the Govt. of Bengal.

NOTIFICATIONS.

LEAVE AND APPOINTMENTS.

The 31st May 1905.

No. 3137P.—Mr. G. C. Ray, Deputy Accountant-General, Bengal, is granted privilege leave for two months and fifteen days, with effect from the 22nd of May 1905.

Mr. U. L. Majumdar is posted as Deputy Accountant-General, Bengal, during the absence, on privilege leave, of Mr. G. C. Ray, or until further orders.

SEPARATE REVENUE.
SALT.

The 1st June 1905.

No. 3164Exc.—In exercise of the powers conferred by section 7, clause (*b*) of the Indian Salt Act, 1882 (XII of 1882), the Governor-General in Council is pleased to remit, subject to any rules which the Governor of Bombay in Council may make in this behalf, the duty in respect of the actual amount of salt wasted, up to a maximum of 5 *per cent.*, which is imposed under clause (*a*) of the said section on salt manufactured in the Presidency of Bombay when such salt is exported by sea in square-rigged sailing vessels or steamers to the ports of Calcutta, Madras, Mangalore, Cochin, Ponani, Beypur, Calicut, Badajara, Tellicherry and Cannanore in British India.

SEPARATE REVENUE.
STAMPS.

The 2nd June 1905.

No. 3191Exc.—In exercise of the power conferred by sections 10 and 75 of the Indian Stamp Act, 1899 (II of 1899), the Governor-General in Council directs that the following amendment shall be made in the rules published in the Notification by the Government of India in the Finance and Commerce Department, No. 7868.R., dated the 17th February 1899:—

In Appendix A (*i*) for the words "instruments evidencing an agreement to secure the repayment of a loan made upon the deposit of title-deeds or other valuable security, or upon the hypothecation of moveable property" the following shall be substituted, namely:

"instruments evidencing an agreement relating to (1) the deposit of title-deeds or instruments constituting or being evidence of the title to any property whatever (other than a marketable security), or (2) the pawn or pledge of moveable property."

W. S. MEYER,
Secy. to the Govt. of India.

The following orders, issued by the Government of India in the Military Department, are republished for general information.

R. W. CARLYLE,
Offg. Chief Secy. to the Govt. of Bengal.

Simla, the 2nd June 1905.

VOLUNTEER CORPS.

APPOINTMENTS, PROMOTIONS AND RESIGNATIONS.

Northern Bengal Mounted Rifles.

No. 483.—Oliver Edward McCutcheon, M.B., Gentlemen, to be Surgeon-Lieutenant, to complete the establishment, with effect from the 1st April 1905.

3rd (Cadet) Battalion, Calcutta Volunteer Rifles.

No. 484.—Second-Lieutenant Stanley Smith to be Captain, *vice* Marklew, deceased, with effect from the 12th May 1904.

H. B. B. WATKIS, *Colonel*,
Offg. Secy. to the Govt. of India.

The Calcutta Gazette.

WEDNESDAY, JUNE 7, 1905.

PART I.B.

ORDERS BY THE LIEUT.-GOVERNOR OF BENGAL.

MUNICIPAL AND LOCAL.

NOTIFICATIONS.

No. 777T.M.—The 27th May 1905.—It is hereby notified that the Commissioners of the Buxar Municipality, in the district of Shahabad, having at a meeting requested the Local Government, under section 23 of the Bengal Municipal Act, III of 1884, to appoint a Chairman, the Lieutenant-Governor is pleased to appoint Mr. C. T. Williams to be their Chairman, *vice* Mr. F. M. Luce, resigned.

Shahabad.

No. 781T.M.—The 27th May 1905.—It is hereby notified that, under section 17 of the Bengal Municipal Act, III of 1884, the Lieutenant-Governor is pleased to appoint the following gentlemen to be Commissioners of the Daudnagar Municipality, in the district of Gaya:—

Gaya.

Maulvi Syed Mohamad Ekbal Hosain.	Babu Biseshwar Puri.
„ „ „ Kazim Hosain.	„ Mohadeo Lal.
„ „ „ Zahurul Hosain.	„ Kanhya Lal.
„ „ „ Leakat Hosain.	Munshi Devi Dayal.
„ „ „ Qayam Hosain.	Babu Rameshwar Pandey.
Babu Pryag Lal.	Munshi Lachhmi Narain.

2. The Lieutenant-Governor is also pleased to appoint, under section 23 of the Act, the Subdivisional Canal Officer of Daudnagar to be the Chairman *ex-officio* of the above Municipality.

No. 835T.M.—The 30th May 1905.—It is hereby notified for general information that the Lieutenant-Governor intends, in the exercise of the power vested in the Local Government by section 221 of the Bengal Municipal Act, III of 1884, and in accordance with the recommendation of the Commissioners of the Cox's Bazar Municipality, in the district of Chittagong, made at a meeting, to extend the provisions of sections 224 to 232, 233 to 244, 249 to 253, 261 to 265, 266 to 273 and 275 to 278 of the said Act to the above Municipality, unless good reasons are shown to the contrary within one month from the date of the publication of this notification within the Municipality.

Chittagong.

No. 894T.M.—The 31st May 1905.—It is hereby notified that, under section 19 of the Bengal Local Self-Government Act, III of 1885, the Lieutenant-Governor is pleased to appoint Babu Joyhari Lal Bose to be a member of the Sitamarhi Local Board in the district of Muzaffarpur, *vice* Babu Mangal Prosad, resigned.

Muzaffarpur.

No. 871T.M.—The 29th May 1905.—It is hereby notified for general information that, in exercise of the powers conferred on him by section 138 of the Bengal Local Self-Government Act, III of 1885, the Lieutenant-Governor is pleased to make the following rule in modification of rule 57 of the rules made under clauses (*g*), (*l*) and (*m*) of that section and published with Notification No. 3334L.S.-G, dated the 20th December 1901, at pages 293—305 of Part IB of the *Calcutta Gazette* of the 25th idem:—

"57. In the case of the following classes of estimates or projects, the sanction of the District or Local Boards shall be subject to the confirmation and approval of the authority indicated:—

(*a*) All projects for new works the estimated cost of which amounts to Rs. 25,000 or more.	Approval of the Local Government in the Public Works Department to be obtained through the Inspector of Local Works and Commissioner of the Division.
(*b*) All projects for works which may affect or alter the course of any river which is navigable at any time of the year or on either bank of which there is any public embankment.	
(*c*) All projects for embanked roads passing through country subject to floods or irrigated from canals.	
(*d*) Plans and estimates for new works for providing or improving drainage.	
(*e*) Plans and estimates for new works or for repairs of existing works for the improvement of the supply of drinking-water, the cost of which exceeds Rs. 1,200.	
(*f*) Plans and estimates for new works and tools and plant, including live-stock and office furniture—	
In the case of a district in class III if the cost exceeds Rs. 500.	Approval of the Commissioner of the Division to be obtained through the Inspector of Local Works.
In the case of a district in class II if the cost exceeds Rs. 1,000.	
In the case of a district in class I if the cost exceeds Rs. 2,500.	
(*g*) Plans and estimates for repairs—	
In the case of a district in class III if the cost exceeds Rs. 1,000.	
In the case of a district in class II if the cost exceeds Rs. 2,000.	
In the case of a district in class I if the cost exceeds Rs. 5,000.	

The sanction of the District or Local Board to an estimate for an original work which forms part of a contemplated scheme, although such estimate may in itself be within the limit up to which the Board can sanction, shall be subject to the confirmation and approval of the same authority as the estimate for the whole scheme would be, and no such estimate for a part of a scheme shall be sanctioned unless the nature and approximate cost of the entire scheme is fully set forth in the report of the estimate.

When the approval of the authority indicated is received, the execution of the work may be proceeded with in accordance with any provision that may be made for it in the budget of the year. If the plans have been materially altered or if the estimate has been raised by the controlling authority, they must be resubmitted to and approved by a formal resolution of the District or Local Board before the work is begun.

No. 413T.M.—The 4th May 1905.—It is hereby notified that, under section 19 of the Bengal Local Self-Government Act, III of 1885, the Lieutenant-Governor is pleased to appoint Mr. W. Milne to be a member of the District Board of Jalpaiguri, *vice* Mr. W. A. J. Thomson, resigned.

Jalpaiguri.

No. 902T.M.—The 2nd June 1905.—It is hereby notified that, under section 27 of the Bengal Municipal Act, III of 1884, the Lieutenant-Governor is pleased to appoint Sayed Mahammad Nurul Haque to be a Commissioner of the Kalna Municipality, in the district of Burdwan, *vice* Sheikh Yakub, deceased.

Burdwan.

No. 920T.M.—The 3rd June 1905.—Whereas a Notification No. 1286M., dated the 10th March 1905, was published at page 48, Part IB of the *Calcutta Gazette* of the 15th idem, declaring the intention of the Lieutenant-Governor to extend the provisions of sections 254 to 260A and 274 of the Bengal Municipal Act, III of 1884, to the Tollygunge Municipality, in the district of the 24-Parganas, and whereas no objection has been raised to the proposal within one month from the date of the publication of the above notification within the Municipality, it is hereby notified for general information that, in the exercise of the power vested in the Local Government by section 221 of the Act, and in accordance with the recommendation of the Commissioners of the Tollygunge Municipality, made at a meeting, the Lieutenant-Governor sanctions the extension of the above provisions of the Municipal Act to the said Municipality.

24-Parganas.

No. 923T.M.—The 3rd June 1905.—It is hereby notified that, under section 27 of the Bengal Municipal Act, III of 1884, the Lieutenant-Governor is pleased to appoint Babu Kishori Lal Mittra to be a Commissioner of the Nalchiti Municipality, in the district of Backergunge, *vice* Babu Srish Chandra Mukherjee, resigned.

Backergunge.

No. 944T.M.—The 5th June 1905.—It is hereby notified that, under section 15 of the Bengal Local Self-Government Act, III of 1885, the Lieutenant-Governor is pleased to appoint the following gentlemen to be members of the several Local Boards in the district of Monghyr:—

Monghyr.

Local Boards.	Names of members.
Sadar ...	Babu Chandi Prosad Misra.
	„ Tarabhusan Banerji.
	„ Shiva Nandan Prosad Sinha.
	„ Dulip Narayan Singh.
	„ Baijunta Ram Goinka.
	Mr. C. T. Ambler (Junior).
	Maulvi Ajirul Huq.
	Babu Priya Nath Banerji.
	Maulvi Hidayat Hossain.
	Shah Mahammad Qasim.
	Babu Debi Prasad.
	Maulvi Nisar Ali Khan.
Begusarai ...	Babu Kali Prasad Jha.
	The Rural Sub-Registrar, Begusarai—*Ex-officio*.
	Babu Rasdhari Singh.
	„ Krishna Ballabh Das.
	Munshi Mosaheb Lal.
	Mr. W. Barrow.
	Maulvi Mohammad Najmuddin.
	„ Ataul Huq.
	Babu Achyutanand.
	Mr. C. T. Danley.
	„ L. J. Harrington.
	Maulvi Amiruddin Ashraff.
Jamui ...	Rao Maheswari Prosad Singh.
	Babu Asutosh Bhattacharjya.
	„ Mathura Prosad Singh.
	Maulvi Amir Safdar.
	„ Mohammad Azim.
	„ Abdur Rahman Khan.
	„ Syed Reza Kuli Khan.
	Babu Ram Prosad Singh.
	Qazi Mazaffar Ahmed.
	Babu Bageswari Prosad Singh.
	„ Sheo Narain Singh.
	„ Gyan Chand.

No. 946T.M.—The 5th June 1905.—It is hereby notified that, under section 19 of the Bengal Local Self-Government Act, III of 1885, Maulvi Mahammad Rezaul Haq has been elected by the members of the Banka Local Board, in the district of Bhagalpur, to be a member of the Bhagalpur District Board, *vice* Thakur Jagadamba Prasad Singh, deceased.

Bhagalpur.

No. 948T.M.—The 5th June 1905.—It is hereby notified that, under section 27 of the Bengal Municipal Act, III of 1884, the Lieutenant-Governor is pleased to appoint Babu Chedi Gain to be a Commissioner of the Lalganj Municipality, in the district of Muzaffarpur, *vice* Babu Rameshwar Lal, deceased.

Muzaffarpur.

No. 950T.M.—The 5th June 1905.—Whereas a Notification No. 1579M., dated the 24th March 1905, was published at page 59, Part IB of the *Calcutta Gazette* of the 29th idem, declaring the intention of the Lieutenant-Governor to sanction the imposition by the Commissioners of the Nadia Municipality, in the district of Nadia, of a rate on the annual value of holdings within the Municipality in lieu of the tax on persons occupying holdings within the Municipality, and whereas no valid objection has been raised to the proposal within one month from the date of the publication of the above notification within the Municipality, it is hereby notified for general information that, in the exercise of the power vested in the Local Government by section 85 of the Act, and in accordance with the recommendation of the Commissioners

Nadia.

of the Nadia Municipality, made at a meeting, the Lieutenant-Governor sanctions the imposition of the said rate within the above Municipality in lieu of the tax upon persons occupying holdings within the Municipality at present in force in that Municipality.

No. 952T.M.—The 5th June 1905.—It is hereby notified that, under section 19 of the Bengal Local Self-Government Act, III of 1885, the Lieutenant-Governor is pleased to appoint Babu Kamlanand Singh to be a member of the Sadar Local Board, in the district of Purnea, *vice* Babu Raghubans Sahai, resigned.

Purnea.

E. A. GAIT,
Offg. Secy. to the Govt. of Bengal.

The Calcutta Gazette.

WEDNESDAY, JUNE 7, 1905.

PART II.

Advertisements.

[N. B.—Advertisements, Notices, &c., intended for insertion in this part of the Gazette cannot be received after Noon on Monday.]

LAND SALE NOTICES.

Notification A.

NOTICE is hereby given under sections 6 and 13, Act XI of 1859, that the undermentioned estates and shares of estates in the district of Noakhali will be put up for sale at the office of the Collector of that district on the 14th June 1905 at P.M. for arrears of revenue and other demands, which by law are realisable as arrears of land revenue.

When in columns 6, 7 and 9 of the appended statement it is stated that only a share is to be sold, it is to be understood that a separate account is kept for that share.

Touzi No.	Name of mahal and pargana.	Sadar jama of the whole estate.	Whether the whole estate is to be sold.	If only a share is to be sold, specification of such share or shares.	Names of proprietors of property to be sold.	If only a share is to be sold, the sadar jama of such share.	If the whole estate is to be sold, the arrears due from it.	If only a share is to be sold, the arrears due from it.
1	2	3	4	5	6	7	8	9
1	Elahabad, pargana Elahabad.	....	Share ...	Residuary share 6 annas ...		Rs. A. P. 852 3 4	..	Rs. A. P. Land Revenue— 309 11 5 Road Cess— 429 8 6 739 3 1

Noakhali, the 3rd May 1905.

B. C. Sen, Collector.

Notification A.

NOTICE is hereby given, under sections 6 and 13, Act XI of 1859, that the undermentioned estates and shares of estates in the district of Tippera will be put up for sale at the office of the Collector of that district on the 27th June 1905 at 12 o'clock for arrears of revenue and other demands which by law are realisable as arrears of land revenue.

When in columns 5, 7 and 9 of the appended statement it is stated that only a share is to be sold, it is to be understood that a separate account is kept for that share.

Tauzi No.	Name of mahal and pargana.	Sadar jama of whole estate.	Whether the whole estate is to be sold.	If only a share is to be sold, specification of such share or shares.	Names of proprietors of property to be sold.	If only a share is to be sold, the sadar jama of such share.	If the whole estate is to be sold, the arrears due from it.	If only a share is to be sold, the arrears due from it.
1	2	3	4	5	6	7	8	9
		Rs. A. P.					Rs. A. P.	
1933/3	Pargana Bardakhat Baluakandi Joar.	2,565 13 3	Whole ...	.....	Dwaraka Nath Barman and others.	.....	638 15 3	.....
1933/50	Pargana Bardakhat Joar Shingula.	1,380 3 1	Do. ...	..	Purna Chandra Chakraberty and others.	.....	373 11 1	.....
1933/51	Pargana Bardakhat Tinchitta Joar.	940 3 9	Do. ...		Tarini Charan Bordhon and others.	.....	193 14 2	.....

Comilla, the 15th May 1905. H. W. SCROOPE, Collector.

Notification A.

NOTICE is hereby given, under sections 6 and 13, Act XI of 1859, that the undermentioned estates and shares of estates in the district of Mymensingh will be put up for sale at the office of the Collector of that district on the 23rd June 1905 at 12 o'clock noon for arrears of revenue and other demands, which by law are realizable as arrears of land revenue.

When in columns 5, 7 and 9 of the appended statement it is stated that only a share is to be sold, it is to be understood that a separate account is kept for that share.

Tauzi No.	Name of mahal and pargana.	Sadar jama of whole estate.	Whether the whole estate is to be sold.	If only a share is to be sold, specification of such share or shares.	Names of proprietors of property to be sold.	If only a share is to be sold, the sadar jama of such share.	If the whole estate is to be sold, the arrears due from it.	If only a share is to be sold, the arrears due from it.
1	2	3	4	5	6	7	8	9
		Rs.		*Second-class estates.*			Rs. A. P.	
6178	Joyarchatal, pargana Baradakhat.	586	Whole ...	.....	Kali Sundari Dassya and others.	.....	9 9 3	.....
8589	Char Iswordia, pargana Mymensingh.	522	Do. ...	.....	Brojendra Kishore Roy Chaudhury and others.	.....	64 14 9	.....

Mymensingh Collectorate, the 13th May 1905. W. B. THOMSON, Collector.

Notification A.

NOTICE is hereby given, under sections 6 and 13, Act XI of 1859, that the undermentioned estates and shares of estates in the district of Burdwan will be put up for sale at the office of the Collector of that district on the 21st June 1905 at 12 o'clock noon for arrears of revenue for March 1905 kist and other demands, which by law are realizable as arrears of land levenue.

When in columns 5, 7 and 9 of the appended statement it is stated that only a share is to be sold, it is to be understood that a separate account is kept for that share.

Tauzi No.	Name of mahal and pargana.	Sadar jama of whole estate.	Whether the whole estate is to be sold.	If only a share is to be sold, specification of such share or shares.	Names of proprietors of property to be sold.	If only a share is to be sold, the sadar jama of such share.	If the whole estate is to be sold, the arrears due from it.	If only a share is to be sold, the arrears due from it.
1	2	3	4	5	6	7	8	9
		Rs. A. P.					Rs. A. P.	
17	Chak Durga, pargana Ranihati.	9,939 2 11	Whole estate is to be sold.	.....	Seyadani Aymana Bibi ...	.....	3,424 0 1	..

Burdwan Collectorate, the 16th May 1905. P. H. O'BRIEN, Collector.

Notification A.

NOTICE is hereby given, under sections 6 and 13, Act XI of 1859, that the undermentioned estates and shares of estates in the district of Nadia will be put up for sale at the office of the Collector of that district on the 23rd June at 12 noon, for arrears of revenue and other demands, which by law are realisable as arrears of land revenue.

When in columns 5, 7 and 9 of the appended statement it is stated that only a share is to be sold, it is to be understood that a separate account is kept for that share, and that the other share or shares in the estate are excluded from the sale.

Tauzi No.	Name of mahal and pargana.	Sadar jama of whole estate.	Whether the whole estate is to be sold.	If only a share is to be sold, specification of such share or shares.	Names of proprietors of property to be sold.	If only a share is to be sold, the sadar jama of such share.	If the whole estate is to be sold, the arrears due from it.	If only a share is to be sold, the arrears due from it.
1	2	3	4	5	6	7	8	9
		Rs. A. P.				Rs. A. P.	Rs. A. P.	Rs. A. P.
266	Jagadanandpur, pargana Bagowan.	955 14 11	Whole ...	.....	Jotindra Nath Ray ...	.....	2 10 2	.....
61	Balia, pargana Plassy ...	5,631 0 9	.....	1a. 13g. 1c. 3d. (separate account No. 61-1).	Dub Mohini Dasi and others.	586 9 1	.....	49 10 3
61	Ditto, ditto	5,631 0 9	...	16g. 2c. 6d. (separate account No. 61-4).	Ditto ditto ...	298 4 7	.....	3 7 5
			Total ...	2a. 10g.				
				The other shares, viz., 13a. 10g., will be excluded from the sale.				
213	Gopalpur, pargana Shahanjial.	2,176 0 5	.....	11a. 15g. 2c. 2kg. (separate account No. 213-0).	Panchanan Mazumdar, self and guardian on behalf of Lalit Mohan Mazumdar.	1,603 4 3	... ..	1 10 2
				The other share, viz., 4a. 4g. 1c. 2kg., will be excluded from the sale..				
3937	Pakuria, pargana Taragonia.	777 6 0	...	5a. 13g. 3c. 1d. (residue) ...	Hama Charan Choudhury.	726 6 4	... ..	3 6 2
				The other shares, viz., 10a. 6g. 2kg. 2d., will be excluded from the sale.				
640	Chur Kaipal, pargana Shahanjial.	1,390 0 0	Whole ...	...	Monmohan Ray, self and guardian for Kedar Nath Ray.	.....	1 5 5	.....

Nadia Collectorate, the 20th May 1905. R. S. GREENSHIELDS, Collector.

Notification B.

NOTICE is hereby given, under sections 5 and 13, Act XI of 1859, that unless the arrears mentioned below are paid on or before the next latest date of payment, viz., the 28th April 1905, the undermentioned estates or shares of estates in the district of Puri will be put up for sale at the office of the Collector of that district on the 10th July 1905 at 12 o'clock noon for the said arrears.

When in columns 5, 7 and 9 of the appended statement it is stated that only a share is to be sold, it is to be understood that a separate account is kept for that share, and that the other share or shares in the estate not specifically mentioned in column 5 are excluded from the sale.

Tauzi No.	Name of mahal and pargana.	Sadar jama of whole estate.	Whether the whole estate is to be sold.	If only a share is to be sold, specification of such share or shares.	Names of proprietors of property to be sold.	If only a share is to be sold, the sadar jama of such share.	If the whole estate is to be sold, the arrears due from it.	If only a share is to be sold, the arrears due from it.	Nature and amount of demand for which to be sold.
1	2	3	4	5	6	7	8	9	10
		Rs. A. P.		A. P.		Rs. A. P.	Rs. A. P.	Rs. A. P.	
185 1	Killah Rupsa, pargana Athais	1,589 0 0	.....	Kismat ... 9 4	Trilochan Chaudhuri and others.	985 5 0	..	491 11 6	Due for kist April 1905.
186 1	Ta. Gangeswarpur, pargana Sanchas.	1,619 0 0	.....	,, ... 9 0	Baladev Prakas Brahmachari.	910 11 0	.....	455 0 0	Ditto.
186 2	Ditto	1,619 0 0	.....	,, ... 7 0	Chandra Moni Debya, mother and guardian of Hanuman Khuntia.	708 5 0	.....	354 0 0	Ditto.
68	Ma. Durgadaspur, pargana Kotrahang.	879 0 0	Whole ...	... ...	Raja Mukund Dev		438 0 0	... ..	Ditto.
79 6	Ma. Thanthania, pargana Kotrahang.	655 0 0	.....	Kismat ... 13 0	Dinanandhu Pain, brother and guardian of Gopi Nath Pain and others.	530 0 0	....	264 14 0	Ditto.
347	Ta Amuri pargana Purbadusi.	1,216 0 0	.....	,, ... 8 0	Nayanmali Jenadie, mother and guardian of Durga Charan Jagadeb Rai.	608 0 0	.....	304 0 0	Ditto.
347 2	Ditto ...	1,216 0 0	.....	,, ... 8 0	Radha Mohan Rai ...	608 0 0	... .	304 0 0	Ditto.

Puri Collectorate, the 7th April 1905. J. E. BLACKWOOD, Collector.

Notification A.

NOTICE is hereby given, under sections 6 and 13, Act XI of 1859, that the undermentioned estates and shares of estates in the district of Purnea will be put up for sale at the office of the Collector of that district on the 29th of June 1905 at 12 o'clock noon for arrears of revenue and other demands, which by law are realisable as arrears of land revenue.

When in columns 5, 7 and 9 of the appended statement it is stated that only a share is to be sold, it is to be understood that a separate account is kept for that share and that the other share or shares in the estate are excluded from the sale.

Tauzi No.	Name of mahal and pargana.	Sadar jama of the whole estate.	Whether the whole estate is to be sold.	If only a share is to be sold, specification of such share or shares.	Names of proprietors of property to be sold.	If only a share is to be sold, the sadar jama of such share.	If the whole estate is to be sold, the arrears due from it.	If only a share is to be sold, the arrears due from it.
1	2	3	4	5	6	7	8	9
		Rs. A. P.				Rs. A. P.		Rs. A. P.
7 2	Surjapur, pargana Surjapur.	2,36,662 13 2	No ...	4 gandas 2 cowris 1 kaant ½ dant. All other shares than that specified will be excluded from the sale.	Syed Asghar Reza Khan Bahadur of Kishanganj.	2,392 1 11½	.....	Land Revenue. 2,498 4 11½ Road Cess... 219 8 3 Total ... 2,717 13 2½

Purnea, the 17th May 1905. J. H. LEA, Collector.

Notification A.

NOTICE is hereby given, under sections 6 and 13, Act XI of 1859, that the undermentioned estates and shares of estates in the district of Backergunge will be put up for sale at the office of the Collector of that district on the 23rd June 1905 corresponding to 9th Ashar 1312 B.S., at 12 noon for arrears of revenue and other demands, which by law are realisable as arrears of land revenue.

When in columns 5, 7 and 9 of the appended statement it is stated that only a share is to be sold, it is to be understood that a separate account is kept for that share.

Tauzi No.	Name of mahal and pargana.	Sadar jama of whole estate.	Whether the whole estate is be sold.	If only a share is to be sold, specification of such share or shares.	Names of proprietors of property to be sold.	If only a share is to be sold, the sadar jama of such share.	If the whole estate is to be sold, the arrears due from it.	If only a share is to be sold, the arrears due from it.
1	2	3	4	5	6	7	8	9
		Rs. A. P.				Rs. A. P.	Rs. A. P.	Rs. A. P.
1645	Joar Durgapur, pargana Boisrgomedpur.	824 4 10½	....	Residuary share 10a. will be sold and share 6a. will be excluded from the sale.	Pyari Mohon Pal and others.	512 10 10½	... ..	161 5 3½
1646	Mahal Darihat, Rajabariguni, pargana ditto.	944 9 7	.....	Residuary share 14a. 15g. will be sold and share 1a. 5g. will be excluded from the sale.	Raja Sree Nath Roy Choudhury and others.	870 12 7	.....	87 1 5½
1479	Taluk Ganga Gobindo Nag and others, pargana ditto.	806 9 8½	Whole ...	.....	Chandra Bin de Pal Choudhury and others.	.....	915 7 8	.....
1653	Taluk Krishna Prosad Guha, pargana ditto.	3,866 15 8	Do. ...	.....	Brojo Lal Roy Chaudhury and others.	.....	196 4 10½	.....
1626	Joar Ramna Bamna, taluk Mohammad Safi, pargana ditto.	19,467 10 8	.....	Separate account No. 2 share— 6a. 1g. 2kr. 2kt. 1gd. 3kr. 1kt. 3til will be sold, and share 9a. 18g. 1kr, 19til 3kt. 3kg. 18gd. 1kt. 12½l will be excluded from the sale.	Mr. G. L. Garth and Mr. H. L. Weatherall, trustees to the estate of Golam Abad Choudhury and others.	7,406 13 0	.....	36 14 5
1672	Taluk Said Miron, pargana ditto.	1,183 14 9½	Whole ...	....	Iochamoyee Gupta and others.	.	444 12 0½	.....
3845	Silimabad zamindari 18g., pargana Silimabad.	3,599 8 0½	.....	Residuary share 7a. 10g. will be sold, share 2a. 1g. 2½kr. will be sold separately and the rest 8a. 18g. 1½kr. will be excluded from the sale.	Kasiswari Choudhurani, executrix to the estate of her husband Durga Narayan Roy Choudhury.	1,687 4 2½	.....	748 2 8½
3846	Ditto ..	3,599 8 0½	.....	Separate account No. 1 share—. 2a. 16g. 3½kr. will be sold, share 7a. 10g. will be sold separately and share 8a. 18g. 1½kr. will be excluded from the sale.	Ditto ...	637 6 7	.....	281 3 9½
4452	Abad Debpur, pargana Ratnadi Kalikapur.	2,333 8 0	Whole ...	.....	Satis Chandra Chakravarti and others.	.....	1,749 12 0	.....
4546	Padma *alias* Ramjanpur, pargana Kasimpur, Sehalapatti.	5,382 0 0	Do. ...	.....	Ambica Charan Chakravarty and others.	.....	2,691 0 0	.....
4767	Char Udaypur, pargana Chandradvip.	566 0 0	Do. ...	.....	Babu Chandi Charan Chatterjee, Manager, Court of Wards, to the estate of Sir Raja Sourindra Mohan Tagore, Kt., C.I.E., etc., and another.	... ..	566 0 0	.....
5968	Char Kakra, together with Rampur, pargana Jasira.	7,989 0 0	Do. ...	.....	Abdul Goni and others.	.....	1,365 15 0	.....
6008	Char Menpura, pargana Jasira.	1,016 2 0	Do. ...	.....	Apseroddin and others	.....	516 0 6	.....
6354	Surplus land of thak Koyaria, pargana Kasimpur Sehalapatti.	998 0 0	Do. ...	.....	Syed Mohammad Mozaffar Hosben Choudhury and others.	... ...	708 10 0	... ...

Backergunge Collectorate, the 11th May 1905. H. C. STREATFEILD, Collector.

Notification A.

NOTICE is hereby given, under sections 6 and 13, Act XI of 1859, that the undermentioned estates and shares of estates in the district of Midnapore will be put up for sale at the office of the Collector of that district on the 27th June 1905 at 12 o'clock for arrears of revenue and other demands which by law are realizable as arrears of land revenue.

When in columns 5, 7 and 9 of the appended statement it is stated that only a share is to be sold, it is to be understood that a separate account is kept for that share.

Tauzi No.	Name of mahal and pargana.	Sadar jama of whole estate.	Whether the whole estate is to be sold.	If only a share is to be sold, specification of such share or shares.	Names of proprietors of property to be sold.	If only a share is to be sold, the sadar jama of such share.	If the whole estate is to be sold, the arrears due from it.	If only a share is to be sold, the arrears due from it.
1	2	3	4	5	6	7	8	9
		Rs. A. P.				Rs. A. P.	Rs. A. P.	Rs. A. P.
278	Pargana tappa Salisita, mahal Baitorebinode, 4 annas' share.	1,658 14 9	...	Residuary share, excluding separate account No. I—10a. 13g. 1k. 1kt. share of the mahal. All other shares than that specified will be excluded from sale.	Chowdry Gopendra Nundan Das Mahapatra.	1,105 15 3	.....	518 3 0
312	Pargana Batitaki, mahal Palgeria.	630 1 7	Entire ...	.....	Mohendra Nath Pal, sebait of Lukshmi Janardan Jew.	...	290 7 0	.....
380	Pargana Bhuniamutta, mahal Haripore alias Hanamalipore.	920 13 8	.....	Residuary share, excluding separate account No. I—15a. 4g. share of the mahal. All other shares than that specified above will be excluded from sale.	Kripasindoo Masanta and others.	874 12 9	.....	372 0 0
535	Pargana Chetua, mahal Dubrajpore.	3,408 10 1	.....	Separate account No. I—8a. share of the mahal. All other shares than that specified above will be excluded from sale.	Sreemati Mangala Dasi and others.	1,704 4 11	.....	256 13 6
535	Ditto ...	3,408 10 1	.....	Separate account No. III—3a. share of the mahal. All other shares than that specified above will be excluded from sale.	Jotindra Nath Sing and others.	639 1 11	.....	219 11 10
548	Pargana Dakhinmal, mahal Haripore.	6,769 1 5	.....	Separate account No. II—8a. share of the mahal. All other shares than that specified will be excluded from sale.	Haripriya Debi	3,384 5 9	.....	1,400 5 3
730	Pargana Enrachore, mahal Bhatda.	3,613 6 4	.....	Residuary share, excluding separate accounts Nos. 3, 4, and 10 to 24— As. G. K. KT. Mauza Baria alias Jharifi ... 16 0 0 0 M. Gopinathpore ... ... 16 0 0 0 M. Karakpara ... 16 0 0 0 M. Miregapore ... 16 0 0 0 M. Naraharipore 16 0 0 0 M. Sundarpore 16 0 0 0 M. Malikpore ... 0 3½ 0 0 M. Mahanagore 0 3½ 0 0 M. Jagannathpore ... ... 5 6 2 2 As. G. KG. TIL. M. Kamardiha... 3 9 9 15 K. M. Dabeta alias kist Dambeta 1 15 2 13 KG. M. Nobipore ... 9 11 6 14 M. Tetulmari ... 12 0 0 0 M. Bhatda ... 8 11 6 3 1K. M. Gonipore ... 3 0 0 0 M. Narainbar ... 16 0 0 0 All other shares than that specified above will be excluded from sale.	Chowdry Gopendra Nundan Das Mahapatra.	1,311 8 0	.....	203 8 0
806	Pargana Kalindibalsai, mahal Chaddahazari.	3,978 11 0	.....	Separate account No. III—8a. share of the mahal. All other shares than that specified above will be excluded from sale.	Haripriya Debi	1,139 5 6	.....	407 3 0
907	Pargana Kasijora, mahal Basilola alias Deulbar.	1,580 4 0	.....	Residuary share, excluding separate account No. I—14a. 16g. share of the mahal. All other shares than that specified will be excluded from sale.	Syed Aftauddin Ahmed	1,366 13 7	.....	656 7 0, January and March 1905.
921	Pargana Kasijora, mahal Chakdaha alias Radaballuvchak.	9,185 8 0, including police.	.....	Separate account No. 4—4a. 5g. share of the mahal. All other shares than that specified will be excluded from sale.	Ashutosh Chatterjee and others	2,439 14 3, including police.	.....	1,141 12 16, including police.
921	Ditto ...	9,185 8 0, including police.	.....	Separate account No. 6—1a. 15g. share of the mahal. All other shares than that specified will be excluded from sale.	Ditto	1,904 10 7, including police.	.....	469 5 16, including police.

Tauzi No.	Name of mahal and pargana.	Sadar jama of whole estate.	Whether the whole estate is to be sold.	If only a share is to be sold, specification of such share or shares.	Names of proprietors of property to be sold.	If only a share is to be sold, the sadar jama of such share.	If the whole estate is to be sold, the arrears due from it.	If only a share is to be sold, the arrears due from it.
1	2	3	4	5	6	7	8	9
		Rs. A. P.				Rs. A. P.	Rs. A. P.	Rs. A. P.
932	Pargana Kasijora, mahal Gurparusattampore *alias* Chaitanyapore.	728 10 8	.....	Residuary share, excluding separate accounts Nos. 1 and 2—12a. 16g. share of the mahal. All other shares than that specified will be excluded from sale.	Ganganarain Maity and others.	590 14 8	.....	259 8 11, January and March 1905.
972	Pargana Kasijora, mahal Kedalia.	1,450 14 1	Entire ...	.....	Debendra Nundan Das Mahapatra.	.....	8 13 10	.....
1047	Pargana Kasijora kut, mahal Manur	2,290 6 10	Do. ...	.....	Damudar Das Barman, sabait of Ramaljew Tagore.	.....	1,046 13 6	.....
1060	Pargana Khandar, mahal Panchpara.	4,058 11 5	.. ..	Separate account No. I— Mauza Abdulla— M. Aroon. M. Aroon chak. M. Fatch chak. M. Gokulpore. M. Jamunda. M. Kanal chak. M. Monohar chak. M. Pal Gokul. M. Rasik chak. M. Ranihati. M. Rai chak. M. Rinode chak. M. Madhu Sudan chak. M. Pithai chak. Eight annas' share of all the above mauzas. All other shares than that specified will be excluded from sale.	Krishna Chandra Kar and others.	633 5 6	[illegible]	293 7 8
1731	Pargana Jynagore, mahal Ankapurba.	1,001 7 2	.....	Residuary share, excluding separate account No. I—8a. share of the mahal. All other shares than that specified will be excluded from sale.	Ganganarain Maity ...	800 11 7	.....	235 15 0
1996	Pargana Narainguriat, mahal Khelar *alias* Benpatua.	3,415 1 7	.....	Residuary share, excluding separate accounts Nos. 1 to 4—	Chowdry Krishna Chandra Das Mahapatra and others.	2,441 1 2	.....	338 13 5, January and March 1905.
				A. G. K. KT.				
				Mauza Allchak 5 6 2 2				
				M. Bakaubeg 10 13 1 1				
				M. Balaram Chaita. 16 0 0 0				
				M. Banpatna ... 16 0 0 0				
				M. Bagheria ... 16 0 0 0				
				M. Baligeria 16 0 0 0				
				M. Benaparadihi 16 0 0 0				
				M. Brambanibhera. 10 13 1 1				
				M. Kalikachuk ... 5 6 2 2				
				M. Kachaibhatiuk 16 0 0 0				
				M. Khatariditi ... 16 0 0 0				
				M. Khatrageria chak. 10 13 1 1				
				M. Lahabarantchak. 10 13 1 1				
				M. Madhuchak ... 5 6 2 2				
				M. Mandalageria 5 6 2 2				
				M. Madhaichak 5 6 2 2				
				M. Nischindipur 16 0 0 0				
				M. Lakrageria ... 5 6 2 2				
				M. Parijatnagar 16 0 0 0				
				M. Punjachotta 5 6 2 2				
				M. Purusattamchak. 16 0 0 0				
				M. Prempura ... 16 0 0 0				
				M. Raghunathpore. 16 0 0 0				
				M. Rajpore ... 16 0 0 0				
				M. Satrughanbar 5 6 2 2				
				M. Sawtalchak ... 5 6 2 2				
				M. Sekharpari .. 16 0 0 0				
				M. Tatra ... 10 13 1 1				
				M. Uochabanudabar. 5 6 2 2				
				M. Bhagabanpore 16 0 0 0				
				M. Chaita .. 16 0 0 0				
				M. Doulbar ... 5 6 2 2				
				M. Harachak ... 5 6 2 2				
				M. Hiraparee .. 10 13 1 1				
				M. Hirapareechak. 10 13 1 1				
				M. Koltpore .. 5 6 2 2				
				M. Kaimkhan .. 10 13 1 1				
				M. Kaimkhanchak. 10 13 1 1				
				M. Kalidasbhera 10 13 1 1				
				All other shares than that specified will be excluded from sale.				
2247	Pargana Sabong, mahal Mohar.	1,445 9 0	Entire ...	.....	Narat Chandra Jana and others.	.....	679 8 0	.....
1487	Pargana Shahapore, mahal Hasimpore.	1,014 2 10, including police.	Do. ...	.....	Sarat Chandra Singha-Chowdery.	.....	190 11 4 Land revenue.	.....
2577	Parrana Shipore, mahal Legua.	2,619 5 3	.....	Separate account No. 22—	Srimati Tilottoma Debi, mother and guardian of Chow. Narendra Nath Pahari, minor.	1,376 15	.....	639 7 1
				A. G. K.				
				Mauza Akbar- 10 0 3				
				M. Aulda 7 0 3				
				M. Barastia 10 0 3				
				M. Bohalia 10 0 3				
				M. Khagda 10 0 3				
				M. Khurutia ... 10 0 3				
				M. Modekool ... 10 0 3				

Tauzi No.	Name of mahal and pargana.	Sadar jama of whole estate.	Whether the whole estate is to be sold.	If only a share is to be sold, specification of such share or shares.	Names of proprietors of property to be sold.	If only a share is to be sold, the sadar jama of such share.	If the whole estate is to be sold, the arrears due from it.	If only a share is to be sold, the arrears due from it.
1	2	3	4	5	6	7	8	9
		Rs. A. P.		A. G. K. KG. M. Madhab Chandra Chak ... 10 0 3 0 M. Logura ... 6 1 3 0 M. Panarul ... 3 10 0 6 M. Nagat Khanda 10 0 3 0 M. Shiporebar .. 10 0 3 0 M. Takapara ... 10 0 3 0 M. Gopalpore .. 6 1 3 0 M. Jagunia ... 10 0 3 0 M. Kanongobar .. 3 10 0 6 M. Kanooprojapati kist .. 3 10 0 6 M. Knarpore .. 10 0 3 0 M. Krishnapore .. 10 0 3 0 M. Brindabanpore 7 0 3 0 M. Chaulda ... 6 1 3 0 M. Dubda .. 10 0 3 0 M. Duhdabati taki 10 0 3 0 M. Dhusurda 7 0 3 0 M. Gobrachak .. 10 0 3 0 M. Godaychak ... 7 0 3 0 All other shares than that specified will be excluded from sale.			Rs. A. P.	
2717	Pargana Jalamutta, mahal Keoramal Erinch Bisuan, Baindabasar Jalpai.	3,360 14 2	Entire	*Part II.*	Sreemati Haripriya Debi	.....	1,575 5 8	.....
2676	Pargana Potaspore, mahal Dehatgokulpore.	28,049 0 0	Do. ...	.. .	Chowdry Gopendra Nundan Das Mahapatra.		22,789 13 0, January and March 1905.	....
2004	Pargana taraf Bisuan, mahal Garahar, &c., bajapti No. 147.	814 0 0	Entire ...	*Part III.* . ..	Panchanon Mirdhya .	.	262 6 0	.... Malguzari right will be sold.

Midnapore, the May 1905. J. N. Roy, Covd. Deputy Collector in charge.

Notification B.

NOTICE is hereby given under section 5, Act XI of 1859, that unless the arrears mentioned below are paid on or before the next latest date of payment, viz., the 28th June 1905, the undermentioned estates or shares of estates in the district of Midnapore will be put up for sale at the office of the Collector of that district on the 30th June 1905, at 12 o'clock noon for the said arrears.

When in columns 5, 7 and 9 of the appended statement it is stated that only a share is to be sold, it is to be understood that a separate account is kept for that share, and that the other share or shares in the estate are excluded from the sale.

Tauzi No.	Name of mahal and pargana.	Sadar jama of the whole estate.	Whether the whole estate is to be sold.	If only a share is to be sold, specification of such share or shares.	Names of proprietors of property to be sold.	If only a share is to be sold, the sadar jama of such share.	If the whole estate is to be sold, the arrears due from it.	If only a share is to be sold, the arrears due from it.	Nature and amount of demand for which to be sold.
1	2	3	4	5	6	7	8	9	10
478	Pargana Chandrakona, mahal Kuldaha.	Rs. A. P. 10,784 7 2	.....	Separate account No. 1, 4a. 5g. 1ch. 1k. share of the mahal. All other shares than that specified will be excluded from sale.	Paran Ch. Ray and others.	Rs. A. P. 2,875 13 8	Rs. A. P.	Rs. A. P. 144 9 0	Rs. A. P. Revenue— 144 9 0
944	Pargana Kasijora, mahal Gumukpota.	3,185 0 0 including police.	.	Separate account No 1, 8 annas share of the mahal. All other shares than that specified will be excluded from sale.	Munimuhun Ray ..	1,593 8 0 including police.	.. .	748 2 0 including police.	Revenue— 743 8 0 Police— 5 10 Cess— 46 15 0 Embankment— 54 0 0
2363	Pargana Sabong, mahal Palpara.	733 3 6	Entire ...	.....	Stya. Tarangini Dasi and others.	.. .	171 13 6 January and March 1905.	... ..	Revenue— 171 13 6 Cess— 18 14 6

Midnapore Collectorate, the May 1905. J. N. Roy, Covtd. Deputy Collector in charge.

Notice of Sale.

NOTICE is hereby given, under sections 6 and 13 of Act XI of 1859, that the undermentioned estates and shares of estates in district of 24-Parganas will be put up for sale at the office of the Collector of that district on the 27th June 1905 at 12 o'clo noon for arrears of revenue and other demands which by law are realizable as arrears of land revenue.

When in columns 6, 7 and 9 of the appended statement it is stated that only a share is to be sold, it is to be understood that separate account is kept for that share and that other share or shares are excluded from sale.

Consecutive No.	Tauzi No.	Name of pargana and mahal.	Sadar jama of the whole estate.	Whether the whole estate is to be sold.	If only a share is to be sold, the specification of such share.	Names of proprietors of the properties to be sold.	If only a share is to be sold, the sadar jama of such share.	If the whole estate is to be sold, the arrears due from it.	If only a share is to be sold, the arrears due from it.
1	2	3	4	5	6	7	8	9	10
1	1	Magura, Chetla and others.	Rs. A. P. 5,022 9 3	.....	12a. 15g. 3k. 1kr. 8t. of the entire estate minus 8a. in each of the mauzas as Sriramporo, Baghirghole and Rajeb Molla's Chak.	Kali Chandra Roy Choudhury and others.	Rs. A. P. 1,161 9 10½	Rs. A. P.	Rs. A. P. 537 15
2	2	Magura, kismat Kangonberia and others.	2,828 15 2½	.....	4a. 5g. 2k. 5½d. of the entire estate minus 4a. 5g. 2k. 5½d. of mauzas Chetla and Alipore.	Kali Nibaran Roy Choudhury.	738 11 11½	.....	263 14
3	3-1	Magura, Laskarpore and others.	2,289 12 6½	.	6a. share, excluding 10a. of the entire estate.	Bindoobashini and Gonesh Jononi Debi guardian of Rajendro Kumar Roy Choudhury.	3,106 10 7½	.....	1,312 6
4	8-1	Magura, kismat Joolpia and others.	3,483 1 3	. .	Excluding 10a., remaining 6a. share.	Ditto ...	1,367 7 9½	.....	471 1
5	9	Magura, kismat Chetla and others.	810 0 6½	Whole ..	.....	Surendro Nath Roy and others.	.	156 11 1½	.....
6	10	Ditto ...	809 10 1½	Do. ...	.....	Ram Kali Roy Choudhury and others.	.....	98 4 0	...
7	13	Ditto ...	810 11 3½	Do. ..	.....	Mohit Kali Debi and others.	.... .	195 5 11½	. .
8	15	Magura, kismat Kheriberia and others.	4,078 14 11½	..	Excluding 3a., remaining 13a. share.	Kali Shobai Roy Choudhury and others.	3,312 13 8½	.....	976
9	15-1	Ditto ...	4,078 14 11½	.....	Excluding 13a., remaining 3a. share.	Kali Podo Roy Choudhury.	766 1 3	.....	205
10	53	Magura, kismat Rameswarpur and others.	3,125 1 2		Residuary share, i.e., entire estate minus shares composed in the separate account Nos. 1 to 9.	Dwija Das Bhaduri, Manager, Court of Wards, and another.	2,102 1 0½	.....	551
11	56	Magura, kismat Sriramporo.	3,126 5 7½	.....	Excluding 1a. 15g. 2k. 2d., remaining 14a. 4g. 1k. 2kr. 1d.	Kristo Prosonno Mondal and others.	2,778 15 8½	.....	999
12	85	Magura, kismat Abgachia and others.	984 14 7	.....	The whole estate minus 7a. share in mauza Chak Kantalia, and 2a. 1g. 2k. share in each of the mauzas kismat Babanpur and Nona.	Troilokhinath Barua ...	861 11 10	.....	309
13	120	Baridhati, kismat Kadalia and others.	5,093 5 3½	Whole ...	... .	Harihar Chatterjee ...	... ..	1,846 13 1½	..
14	152	Khaspore, Srirampore and others.	703 8 8	. .....	14a. 4g. 1k. 2kt. 7d. share, excluding 1a. 15g. 1k 1kr. 2d.	Kristo Prosonno Mondle and others.	625 5 11	. ...	196
15	230	Khaspore, Dhakuria and others.	1,064 11 10	.. .	16a. share minus 1a. 15g. 2k. 2d. share in each of the mauzas Garia and Berju.	Sarat Kumari Dassi and others.	1,046 10 9	.....	69
16	250-9	Midnamolla, Barulpore and others.	2,630 7	.....	1a. 11g. 4d. share, excluding 14a. 8g. 3k. 5d. share.	Jitendro Kumar Roy Chowdhri.	3,115 13 7	.....	129
17	251	Medan Molla, Rajpur and others	1,073 2 2½	. .	11a. 11g. 1kr. 1d. share, excluding 4a. 8g. 3k. 1kr. 2d. share.	Kedar Nath Roy Choudhury and others.	776 7 10	..	58
18	253 314	Pargana Mudas Molla, Kharampara and others.	1,079 3 6	.....	11a. 11g. 1kr. 1d. share, excluding 4a. 8g. 3k. 1kr. 2d.	Kedarnath Roy Choudhury and others.	779 7 0	. . .	46
19	315-1	Muragacha, Harinarainpore and others	12,200 12 6½	.....	7a. 11g. 2k. 2kg. 13t. 1k. share of the entire estate.	Banki Behari Mandal and others.	5,747 4 5	.. ..	586
20	315-3	Muragacha, Raghunathpore and others.	10,220 15 6	.....	18g. 3k. share, excluding 16a. 1g. 1k. share.	Kristo Prasanna Mandal and others.	849 6 7½	.....	186
21	315-11	Ditto ...	10,229 15 6		Excluding 13a. 19g. 2k 2kr. 2d. share, remaining 2a. 1k. 1d. share.	Gopi Kisore Mandal and others.	1,287 9 11½	.....	676
22	336	Ditto ...	10,229 15 6	.....	Excluding 14a. 17g. 2k. share, remaining 1a. 2g. 2k. share.	Apurba Kumari Dasi ...	719 4 9	.....	378
23	327-1	Muragacha, Bistoopore and others.	2,443 3 0	.....	Excluding 18a. 12g. share, remaining 6g. share.	Jotindra Nath Roy Choudhury and others.	1,312 23½	.....	694
24	346	Muragacha, Dharapare and others.	1,064 7 4	.....	Ditto	Uma Prosad Ghose ...	582 3 8	.....	281
25	385	Balia Santoshbati and others.	5,651 0 9	..	Excluding 2a. 13g. 3k. 2kr. 2d., remaining 13a. 6g. 1kr. 1d. share.	Brojendranath Mandal and others.	4,596 15 4	.....	336
26	385-1	Azimabad Hudarash khali and others.	19,434 8 1½	.....	In each of the mauzas except Khakramuri 15g. share.	Gopikisore Mandal and others.	906 2 7½	.....	614
27		Ditto ...	19,434 8 1½	.....	Ditto 1a. 2g. 2k. share ...	Nobokisore Mandal and others.	1,366 13 7	.	388
28	385-4	Ditto ...	19,434 8 1½	.....	Excluding 15a. 4g. 2k. 2kr. remaining 15g. 1k. 1kr. share.	Brojendra Nath Mandal	926 8 7½	.....	511
29	385-5	Ditto ...	19 24 8 1½	.....	1a. 1g. 2k. 1d. share of the entire estate.	Gopi Kisore Mandal and others.	1,303 10 7½	.....	728
30	385-6	Ditto ...	19,434 8 1½	.....	Excluding 15a. 4g. 2k 2kr., remaining 15g. 1k. 1kr. share.	Kristo Prosanna Mandal	926 8 7½	.....	511
31	385-9	Ditto ...	19,434 8 1½	.....	Excluding 14a. 17g. 2k., remaining 1a. 2g. 2k. share.	Apurba Kumari Dasi ...	1,362 8 7½	.....	761
32	385-10	Ditto ...	19,434 8 1½	.....	Excluding 15a. 4g. 2k. 2kr., remaining 15g. 1k. 1kr. share.	Sarat Kumari Dasi ...	926 8 7½	. ..	259
33	385-11	Ditto ...	19,434 8 1½	.....	In all the mauzas except mauza Khagramori 13g. 1k. 1kr. share.	Kalidas Adak and others.	807 6 10	.....	234
34	385-12	Ditto ...	19,434 8 1½	.....	Excluding 15a. 1½g. share remaining 10g. share.	Nobokisore Mandal and others.	605 9 5	.....	338
35	385-14	Ditto ...	19,434 8 1½	.....	Excluding 15a. 5g., remaining 15g. share.	Chandi Charan Mandal and others.	906 6 1	.....	507
36	388-1	Ra'ia Moloyapore and others.	8,326 9 0	.. ...	Excluding 14a. 17g. 2k., remaining 1a. 2g. 2k. share.	Nobokisore Mandal and others.	585 3 2½	.....	160
37	388-3	Ditto ..	8,326 9 0	. . .	Excluding 14a. 18g. 1k. 2kr. 2d., remaining 1a. 1g. 2k. 1d. share.	Gopi Kisore Mandal and others.	560 3 4½	.....	153
38	389-1	Balia Santoshpore and others.	9,401 5 10	.....	Excluding 14a. 17g 2k., remaining 1a. 2g. 2k. share.	Radha Binod Mandal and others.	663 5 10½	.....	171
39	389-4	Ditto;	9,401 5 10	.	Excluding 14a 18g. 1k. 2kr. 2d., remaining 1a. 1g. 2k. 1d. share.	Gopi Kisore Mandal and others.	614 11 3½	.....	170

Consecutive No.	Tauzi No.	Name of pargana and mahal.	Sadar jama of the whole estate.	Whether the whole estate is to be sold.	If only a share is to be sold, the specification of such share.	Names of proprietors of the properties to be sold.	If only a share is to be sold, the sadar jama of such share.	If the whole estate is to be sold, the arrears due from it.	If only a share is to be sold, the arrears due from it.
1	2	3	4	5	6	7	8	9	10
			Rs. A. P.				Rs. A. P.	Rs. A. P.	Rs. A. P.
40	388-12	Balia, Santoshpur and others.	9,401 5 10	...	Excluding 14a. 17g. 2k., remaining 1a. 2g. 2k. share,	Apurba Kumari Dasai	963 5 11	.....	343 14 4
41	391-5	Muragacha, Gomukhi, and others.	5,638 8 6	...	Excluding 13a. 19g. 2k. 2kr., 2d., remaining 2a. 1k. 1d. share.	Gopikisor Mandal and others.	697 2 0	.....	229 0 11
42	391-6	Ditto	5,138 8 6	.....	Excluding 14a. 0g. 2k. 2kr. remaining 1a. 13g. 1k. 1kr. share.	Kshirodamayee Dasai, widow of late Sashi Bhusan Biswas.	576 14 11	.....	187 15 2
43	392	Azimabad, Huda Joychandipur.	8,313 7 8	... ..	Excluding 13a. 6g. 2k. 2kr., remaining 2a. 13g. 1k. kr. share.	Nabakisor Mandal and others.	1,385 9 2	.....	558 7 8½
44	392-1	Ditto	8,313 7 8	.....	Excluding 12a. share, remaining 4a. share.	Radhabinod Mandal and others.	2,078 5 11	.....	1,546 15 1
45	392-3	Ditto	8,313 7 8	.....	Excluding 13a. 6g. 2k. 2kr., remaining 2a. 13g. 1k. 1kr. share.	Chandi Charan Mandal and others.	1,385 9 4	.....	558 10 0
46	392-4	Ditto	8,313 7 8	.....	Ditto ditto ...	Nabakisor Mandal and others.	1,385 9 4	.....	558 9 11
47	394-6	Azimabad, taraf Kisorepore.	7,106 12 11	... ..	Excluding 14a. 6g. 2k. 2kr., remaining 1a. 13g. 1k. 1kr. share.	Srimaty Kshirodamoyi Dasai.	740 8 1	.....	154 7 8
48	395	Azimabad, taraf Madhabpore.	14,657 13 11	.....	Excluding 6a., remaining 10a. share.	Baikuntha Nath Dey, and others.	9,161 2 8	.....	2,433 9 4
49	395-1	Ditto ...	14,657 13 11	..	Excluding 10a., remaining 6a. share.	Srimati Kiran Sashi Dasi, guardian of Kamal Kristo and Bata Kristo Mandal.	5,496 11 3	.....	2,433 8 8
50	400	Balia Ramchandrapur and others.	747 11 1	Whole ...	..	Radha Mohan Mandal..	.....	235 7 3	.....
51	401-4	Azimabad Huda Ramkristapur and others.	8,941 9 7	.....	Excluding 14a. 14g. 2kr., remaining 1a. 5g. 3k. 1kr. share.	Gopi Kissore Mandal and others.	721 13 6½	.....	130 0 10½
52	401-7	Ditto ...	8,941 9 7	.....	Excluding 14a. 17g. 2k., remaining 1a. 2g. 2k. share.	Krista Lal Mandal and others.	628 11 3½	.....	33 4 4
53	401-11	Ditto ...	8,941 9 7	... ..	Ditto ditto ...	Apurba Kumari Dasai...	628 11 3½	. .	224 15 10½
54	403	Azimabad, taraf Patharbaria, and others.	5,143 3 3	.....	Excluding 9a. 14g. 2k. 2kr., remaining 6a. 5g. 1k. 1kr. share..	Ranka Behari Mandal and others.	2,014 6 6½	.....	351 11 8½
55	403-2	Ditto ..	5,143 3 3	. . .	Excluding 9a. 6g. 2k. 2kr., remaining 6a. 13g. 1k. 1kr. share.	Kshiroda Mayee Dasi, widow of Sashi Bhusan Biswas.	2,143 15 11	.....	415 4 8
56	411	Magura, kismut Dhanuyakhola and others.	2,518 8 7	Whole	.....	Manilal Banerjea ...	..	782 8 5	.....
57	1147	Modanmolla Komalpore and others.	1,082 10 3	.....	Excluding 4a. 8g. 3k. 1kr. 2d., remaining 11a. 11g. 1kr. 1d. share.	Durgadas Roy Chowdhury and others.	761 13 7	.....	33 13 1

24-Parganas Collectorate, Alipore, the 22nd May 1905. J. H. BERNARD, Collector.

Notification A.

NOTICE is hereby given, under sections 6 and 13, Act XI of 1859, that the undermentioned estates and shares of estates in the district of Birbhum will be put up for sale at the office of the Collector of that district on the 24th June 1905 at 11 A.M. for arrears of revenue and other demands, which by law are realisable as arrears of land revenue.

When in columns 5, 7 and 9 of the appended statement it is stated that only a share is to be sold, it is to be understood that a separate account is kept for that share, and that the other share or shares in the estate are excluded from the sale.

Tauzi No.	Name of mahal and pargana.	Sadar jama of whole estate.	Whether the whole estate is to be sold.	If only a share is to be sold, specification of such share or shares.	Names of proprietors of property to be sold.	If only a share is to be sold, the sadar jama of such share.	If the whole estate is to be sold, the arrears due from it.	If only a share is to be sold, the arrears due from it.
1	2	3	4	5	6	7	8	9
		Rs. A. P.				Rs. A. P.		Rs. A. P.
17	Kagash, pargana Moureswar Saheb.	17,182 13 3	.....	Residuary share 2a. 19g. 3k. 1kt. and 6d. share of mauzas Amdahara Chuk, Alal-Bandi, Ishabpur, Ishanpur *alias* Ichakpur, Uttormath, Ekuti, Kalyanpur, Kagash, Kartickgunj, Kalipur, Kuchuighata, Kushumjatra, Kumaipur, Kristopur, Khatiepur, Khagra Chuk, Khurja, Chandpur, Jamkala, Jalia, Jhikordaha Chuk, Thakurgaown Chuk, Tikordaha, Tilpara Chuk, Dari Rajejami-Rajeupti, Dhobagaon, Dhobajola, Nowapara, Nanas Chuk, Nirisha, Paikpara, Pargaon, Piasala, Bahara Chuk, Belia, Bipra-Salgoria, Butcha Chuk, Bhagabatipur, Moidipur, Mallati, Mahabatpur Chuk, Mohiddipur Chuk, Mohespur, Maligaon Chuk, Metery, Rasulgunj, Rajballav Chuk, Rupashi, Salgoria, Sibpur, Salamath, Horikora, Horispur, Hazrapur, and 3a. 5g. 10kag of Banara and Bahadoorgunj. All other shares than that specified will be excluded from the sale.	Asu Toah Mookerjee and others.	Rs. A. P. 2,940 15 0	.....	Rs. A. P. 150 9 10

Birbhum Collectorate, Suri, the 4th May 1905. S. C. MUKERJEE, Collector.

Notification A of sale.

NOTICE is hereby given, under sections 6 and 13, Act XI of 1859, that the undermentioned estates and shares of estates in the district of Rangpur will be put up for sale at the office of the Collector of that district on the 22nd June 1905, at 12 noon, for arrears of revenue and other demands, which by law are realizable as arrears of land revenue.

Tauzi No.	Name of mahal and pargana.	Sadar jama of whole estate.	Whether the whole estate is to be sold.	If only a share is to be sold, specification of such share or shares.	Names of proprietors of property to be sold.	If only a share is to be sold, the sadar jama of such share.	If the whole estate is to be sold, the arrears due from it	If only a share is to be sold, the arrears due from it.
1	2	3	4	5	6	7	8	9
168	Kundi, pargana Kundi, 7 annas.	Rs. A. P. 10,672 10 3	No ...	The separate account bearing No. 168-1 comprising 16 annas of each of the mauzas Barabari Raghu, Budha, Gobardhan, Ghose Raghab, Jayram, Lakshan Kisamat chhota, Rajaram, Shala Pukhari, Digaltari, Kashichak, Khalia, Lalu Kisamat, Sobandighi, Purandar Kashinathpur, and Khaleya kisamat and 8 annas share of each of the mauzas Fatehpur, Gopinathpur, Jinahar, Krishnapur, Ranipur, Sripur *alias* Srichandra Barakali Jama and Khalia.	Nabin Kishori Chaudhurani and others.	Rs. A. P. 1,471 1 11	.....	Rs. A. P. 194 3 1

NOTE. All other shares besides that specified will be excluded from the sale.

Rangpur, the 28th April 1905. T. EMERSON, Collector.

Notification A.

NOTICE is hereby given under sections 6 and 13, Act XI of 1859, that the undermentioned estates and shares of estates in the district of Dacca will be put up for sale at the office of the Collector of that district on the 23rd June 1905 at 12 o'clock noon for arrears of revenue and other demands, which by law are realizable as arrears of land revenue:—

When in columns 5, 7 and 9 of the appended statement it is stated that only a share is to be sold, it is to be understood that a separate account is kept for that share, and that the other share or shares in the estate are excluded from the sale.

Tauzi No.	Name of mahal and pargana.	Sadar jama of whole estate.	Whether the whole estate is to be sold.	If only a share is to be sold, specification of such share or shares.	Names of proprietors of property to be sold.	If only a share is to be sold, the sadar jama of such share.	If the whole estate is to be sold, the arrears due from it.	If only a share is to be sold, the arrears due from it.
1	2	3	4	5	6	7	8	9
		Rs. A. P.		Residue— as. gds. kr. kt.		Rs. A. P.		Rs. A. P.
275	Pargana Talipabad, Siv Prosad.	1,146 10 7½		13 6 2 3	Jasoda Lal Roy and others	955 8 10½	.....	14 10 4
546	Pargana Rokanpur, Tapse Bowkanda John Hollo.	3,078 6 7½		Residue— 9 13 1 1	Ditto	1,860 0 5	.....	139 6 9
9966	Pargana Ran Bhowal Miali Haidar.	1,125 5 0	...	Residue	Maharaja Surja Kant Acherjee and others.	618 4 4	.....	18 3 11½

Dacca Collectorate, the 12th May 1905. MOHENDRA CHUNDER MOZUMDAR, Deputy Collector in charge.

Notice.

NOTICE is hereby given, under sections 6 and 13 of Act XI of 1859, that the undermentioned estate and share of estate in the district of the 24 Parganas will be put up for sale at the office of the Collector of that district on the 14th June 1905, at 12 o'clock noon, for arrears of revenue and other demands which by law are realised as arrears of land revenue

When in columns 5, 7 and 9 of the appended statement it is stated that only a share is to be sold, it is understood that separate account is kept for that share and that the share or shares are excluded from sale

Consecutive number.	Tauzi No.	Name of pargana and mahal.	Sadar jama for the whole estate.	Whether the whole estate is to be sold	If only a share is to be sold, the specification of such share.	Names of proprietors of properties to be sold.	If only a share is to be sold, the sadar jama of such share.	If the whole is to be sold, the arrears due from it.	If only a share is to be sold, the arrears due from it.
1	2	3	4	5	6		8	9	10
1	892/1	Asimabad, kisma Hudajoy-Chandipore.	Rs. A. P. 8,313 7 8	..	Excluding 12as. share, remaining 4as. share.	Radhabinode Mundal and others.	Rs. A. P 2,078 5 11		Rs. A. P. 711 1 8½

Alipore, the 8th May 1905. BHUPATI CHAKRAVARTTI, *for* Collector.

Advertisement of Sale.

NOTICE is hereby given that the undermentioned plots of land, no longer required by Government, situated along the South Behar Section Railway, in the district of Monghyr, will be put up to sale at 10 o'clock on the 8th day of uly 1905, corresponding with the 21st Asadh 1312 Fusli, at Barhi, village Indupur.

The purchasers of the several plots of land will be subject to the following conditions:—

1st.—The purchasers will have no power to make any excavations on the land nearer than 15 feet from the railway fencing, or plough the land closer than 3 feet from its foundation.

2nd.—If the amount of purchase-money does not exceed Rs. 100, the whole amount must be paid down at once.

3rd.—If the amount of purchase-money exceed Rs. 100, one-fourth of the amount must be immediately deposited. If the balance be not paid by noon of the fifteenth day after the sale, reckoning the day of sale as one, or if that day be a close holiday, then by noon of the first succeeding office day, the sale shall be cancelled, the sum deposited being forfeited to Government, and the lot again put up for sale at the risk of the defaulting purchaser, after issue of advertisement as in the case of original sale.

4th.—The plots of land will be sold revenue-free to the highest bidders.

5th.—The purchasers shall be put in possession on receipt by the Collector of the orders of the Board confirming the sale.

Consecutive number.	Name of district.	Pargana and mauza.	Number of mile on which land is situate.	Situated on which side of the railway.	Approximate area of lot in bighas and in acres. B. K. C.	Approximate area of lot in bighas and in acres. A. R. P.	Land excluded from sale from each lot. Reasons for exclusion.	Land excluded from sale from each lot. A. R. P.	Commencement and termination of lot.	Boundary of lot.
1	2	3	4	5	6		7		8	9
1	Monghyr	Indupur, pargana Salemabad.	. .	South of the railway line running from Howrah to Dehli.	3 17 15½	3 1 16·536	. .		From 1 to 4.	*North*—Orchards belonging to Kali Singh, Chulha Dusadh, Muso Singh in Barhi and jote of Jagdeo Singh in relinquished B class land. *South*—Waste land and relinquished B class lands. *East*—Waste land. *West*—Railway fencing.
2	Ditto ...	Ditto ..	.. ..	Ditto ...	3 1 4½					
3	Ditto ...	Ditto ...	...	Ditto ...	0 15 0					
4	Ditto	Ditto ..	.....	Ditto ...	2 8 10½					
					10 2 16½					

Monghyr, the 9th May 1905.

U. GUHA, *for* Collector.

Advertisement of Sale.

NOTICE is hereby given that the undermentioned plots of land, no longer required by Government, situated along the Nirmali Station of the Tirhut State Railway, in the district of Bhagalpur, will be put up to sale at 11 o'clock on the 30th June 1905, corresponding to 13th of Assar Fasli 1312 at Supaul Katchery, district Bhagalpur.

The purchasers of the several plots of land will be subject to the following conditions:—

1st.—The purchasers will have no power to make any excavations on the land nearer than 15 feet from the railway boundary, or to plough the land closer than 3 feet from its foundation.

2nd.—If the amount of purchase-money does not exceed Rs. 100, the whole amount must be paid down at once.

3rd.—If the amount of purchase-money exceed Rs. 100, one-fourth of the amount must be immediately deposited. If the balance be not paid by the noon of the fifteenth day after the sale, reckoning the day of sale as one, or if that day be a close holiday, then by noon of the first succeeding office day, the sale shall be cancelled, the sum deposited being forfeited to Government, and the lot again put up for sale at the risk of the defaulting purchaser, after issue of advertisement, as in the case of original sale.

4th.—The plots of land will be sold revenue-free to the highest bidder.

5th.—The purchasers shall be put in possession on receipt by the Collector of the orders of the Board confirming the sale.

Consecutive lot No.	Name of district.	Pargana and mauza.	Number of mile on which land is situate.	Situated on which side of the railway.	Approximate area of lot in bighas and in acres. B. K. C.	Approximate area of lot in bighas and in acres. A. R. P.	Land excluded from sale from each lot. Reasons for exclusion.	Land excluded from sale from each lot. A. R. P.	Commencement and termination of lot.	Boundary of lot.
45, 46, 47, 48, 49, 50, 51, 52, 53, 54, 55, 56, 57, 58, 59, 60, 61, 62 to 67, 69 to 114, 116 to 121, 123 to 129, 132, 133, 139, 140 and 141.	Bhagalpur	Mauza Nirmali, pargana Naredigar.	87	North	44 7 8 (Standard).	14·67 0 0	.....	.....	.....	*North*—Mauza Nirmali. *South*—Land in possession of the railway. *East*—Road to Nirmali. *West*—Mauza Nirmali.

Bhagalpur, the 15th May 1905.

H. COUPLAND, Collector of Bhagalpur.

Advertisement of Sale.

NOTICE is hereby given that the undermentioned plots of land, no longer required by Government, situated along the Hajipur-Katihar Extension Railway, in the district of Monghyr, will be put up to sale at 10 o'clock on 8th day of July 1905, corresponding to the 21st Asarh 1312 Fasli, at Mohanpur, pargana Naipur.

The purchasers of the several plots of land will be subject to the following conditions:—

1st.—The purchasers will have no power to make any excavations on the land nearer than fifteen feet from the railway fencing, or plough the land closer than three feet from its foundation.

2nd.—If the amount of purchase-money does not exceed Rs. 100, the whole amount must be paid down at once.

3rd.—If the amount of purchase-money exceeds Rs. 100, one-fourth of the amount must be immediately deposited. If the balance be not paid by noon of the fifteenth day after the sale, reckoning the day of sale as one, or if that day be a close holiday, then by noon of the first succeeding office day, the sale shall be cancelled, the sum deposited being forfeited to Government, and the lot again put up for sale at the risk of the defaulting purchaser, after issue of advertisement, as in the case of original sale.

4th.—The plots of land will be sold revenue-free to the highest bidders.

5th.—The purchasers shall be put in possession on receipt by the Collector of the orders of the Board confirming the sale.

Consecutive lot No.	Name of district.	Pargana and mauza.	Number of mile on which land is situate.	Situated on which side of the railway.	Approximate area of lot in bighas and in acres.		Land excluded from sale from each lot.		Commencement and termination of lot.	Boundary of lot.
					B. K. C.	A. R. P.	Reasons for exclusion.	A. R. P.		
1	2	3	4	5	6		7		8	9
1	Monghyr	Mohanpur, pargana Naipur.	2 of the Hajipur-Katihar extension.	North ...	0 5 11	.....	.....	.....	From 1 to 3 ...	*North.*—Girja Chaudhry's land. *South.*—Waste land. *East.*—Railway fencing. *West.*—Alkhu Chaudhry's land.
2	Ditto ...	Ditto ...	Ditto ...	Do.	0 5 6	.....	.....	.....	...	*North.*—Girja Chaudhry's land. *South.*—Railway fencing. *East.*—Railway fencing. *West.*—Girja Chaudhry's land.
3	Ditto ..	Ditto ...	Ditto ...	Do. ...	0 0 12	.....	.....	.....	..	*North.*—Girja Chaudhury's land. *South.*—Railway fencing *East.*—Railway fencing *West.*—Girja Chaudhury's land.

Monghyr, the 9th May 1905.

UMA PRASANNA GUHA, *for* Collector.

Notification A.

NOTICE is hereby given, under sections 6 and 13, Act XI of 1859, that the undermentioned estates and shares of estates in the district of Purnea will be put up for sale at the office of the Collector of that district on the 27th June 1905 at 12 o'clock noon, for arrears of revenue and other demands, which by law are realisable as arrears of land revenue.

When in columns 5, 7 and 9 of the appended statement it is stated that only a share is to be sold, it is to be understood that a separate account is kept for that share.

Tauzi No.	Name of mahal and pargana.	Sadar jama of whole estate.	Whether the whole estate is to be sold.	If only a share is to be sold, specification of such share or shares.	Names of proprietors of property to be sold.	If only a share is to be sold, the sadar jama of such share.	If the whole estate is to be sold, the arrears due from it.	If only a share is to be sold, the arrears due from it.
1	2	3	4	5	6	7	8	9
175	Nisf pargana Katihar, pargana Katihar.	Rs. A. P. 5,456 1 3½	Whole ...		Bibi Fulkumari of Murshidabad.		Rs. A. P. Land Revenue 3,082 10 7 Road Cess ... 621 11 6 Dák cess .. 30 2 6 Total ... 3,704 8 7	.....

Purnea, the 17th May 1905.

J. H. LEA, Collector.

Advertisement of Sale.

NOTICE is hereby given that the undermentioned plots of land, no longer required by Government, situated along the Hajipur Branch Railway, in the district of Muzaffarpur, will be put up to sale at 1 o'clock on Friday, the 30th June 1905, corresponding with the 13th Jaith of 1312 Fusli, at Muzaffarpur.

The purchasers of the several plots of land will be subject to the following conditions —

1st.—The purchasers will have no power to make any excavations on the land nearer than 15 feet from the railway boundary, or to plough the land nearer than 3 feet from the same.

2nd.—If the amount of purchase-money does not exceed Rs. 100, the whole amount must be paid down at once.

3rd.—If the amount of purchase-money exceed Rs. 100, one-fourth of the amount must be immediately deposited. If the balance be not paid by noon of the fifteenth day after the sale, reckoning the day of sale as one, or if that day be a close holiday, then by noon of the first succeeding office day, the sale shall be cancelled, the sum deposited being forfeited to Government, and the lot again put up for sale at the risk of the defaulting purchaser, after issue of advertisement, as in the case of original sale.

4th.—The plots of land will be sold revenue-free to the highest bidders.

5th.—The purchasers shall be put in possession on receipt by the Collector of the orders of the Board confirming the sale.

Consecutive lot No.	Name of district.	Pargana and mauza.	Number of mile on which land is situate.	Situated on which side of the Railway.	Approximate area of lot in bighas and in acres.		Land excluded from sale from each lot		Commencement and termination of lot.	Boundary of lot.
					B. K. C.	A. R. P.	Reasons for exclusion.	A. R. P.		
1	Muzaffarpur.	Chupralodi *alias* Maripore and Bhagwanpore, pargana Besara.	Mile 1 of Hajipur line.	West of the Railway.	0 12 5	0 0 32	.	.....	.....	*North*—Orchard of Tabarak Hussain. *South*—Public road. *East*—Railway fencing. *West*—Orchard of Kunja Sahu.
2	Ditto ...	Chupralodi *alias* Maripore.	Ditto ...	East of the Railway.	0 4 4	0 0 11·2	.....	.....	.....	*North*—Garden of Mr. Franjy. *South*—Public road. *East*—Garden of Mr. Franjy. *West*—Railway fencing.
3	Ditto ...	Ditto ...	Miles 1 and 2 of Hajipur line.	Ditto ...	0 4 0	0 0 11	.....	.....	.....	*North*—Public road. *South*—Orchard of Safdar Hussain. *East*—Orchard of Abdul Jabar. *West*—Railway fencing.
4	Ditto ...	Ditto ...	Ditto ...	On both sides of the Railway.	2 18 3	0 2 20	This being a part of the District Board road.	0 2 20	.....	

The 17th April 1905.

KALI MOHAN SEN, for Collector.

Advertisement of Sale.

NOTICE is hereby given that the undermentioned plots of land, no longer required by Government, situated along the Chowrashi Branch of the Bengal-Nagpur Railway, in the district of Manbhum, will be put up to sale at 4 P.M. on Thursday, the 8th June 1905, corresponding to the 25th Jaista 1312 B.S., at Ramkanali station of the Bengal-Nagpur Railway.

The purchasers of the several plots of land will be subject to the following conditions:—

1st.—The purchasers will have no power to make any excavations on the land nearer than fifteen feet from the Railway boundary, or to plough the land nearer than three feet from the same.

2nd.—If the amount of purchase-money does not exceed Rs. 100, the whole amount must be paid down at once.

3rd.—If the amount of purchase-money exceeds Rs. 100, one-fourth of the amount must be immediately deposited. If the balance be not paid by noon of the fifteenth day after the sale, reckoning the day of sale as one, or if that day be a close holiday, then by noon of the first succeeding office day, the sale shall be cancelled, the sum deposited being forfeited to Government, and the lot again put up for sale at the risk of the defaulting purchaser, after issue of advertisement, as in the case of original sale.

4th.—The plots of land will be sold revenue-free to the highest bidders.

5th.—The purchasers shall be put in possession on receipt by the Collector of the orders of the Board confirming the sale.

Consecutive lot No.	Name of district.	Pargana and mauza.	Number of mile on which land is situate.	Situated on which side of the railway.	Approximate area of lot in bighas and in acres.	
					B. K. C.	A. R. P.
1 and 2	Manbhum ..	Pargana Chowrashi, villages Nodiha and Narainpur.	8	On the north side of the railway line.	27 9 5·01	9 0 12·73

GANGA CHARAN CHATTERJEE, Collector under Act I of 1894, Burdwan and Manbhum.

Land Acquisition Office, Burdwan and Manbhum, the 15th April 1905.

Notification A.

NOTICE is hereby given, under sections 6 and 13, Act XI of 1859, that the undermentioned estates and shares of estates in the district of Balasore will be put up for sale at the office of the Collector of that district on the 18th day of July 1905, at 12 o'clock noon for arrears of revenue and other demands which by law are realizable as arrears of land revenue.

When in columns 5, 7 and 9 of the appended statement it is stated that only a share is to be sold, it is to be understood that a separate account is kept for that share.

Tauzi No.	Name of mahal and pargana.	Sadar jama of whole estate.	Whether the whole estate is to be sold.	If only a share is to be sold, specification of such share or shares.*	Names of proprietors of property to be sold.	If only a share is to be sold, the sadar jama of such share.	If the whole estate is to be sold, the arrears due from it.	If only a share is to be sold, the arrears due from it.
1	2	3	4	5	6	7	8	9
876	Taluk Purusottampur, pargana Balikhand.	Rs. A. P. 5,906 0 0	Whole ...	.....	Chaudhuri Ram Chandra Nisankha Mahapatra and others of Purusottampur, pargana Balikhand and others.	Rs. A. P.	Rs. A. P. 140 11 0 1905 April kist.	Rs. A. P. .....
1600	Kt. taluk Guruprasad, pargana Bayang.	1,416 0 0	Do. ...	.....	Munshi Latifur Raheman Ahmed and others of Isafpur, pargana Randiaorgara and others.		38 9 6 1905 April kist.	.....
985 Ijmali.	Taluk Birbarpur, pargana Bhera.	2,265 0 0	Share ...	12a. 9p. 16kt. 7b. 1g. 1½ bed.	Radha Charan Mahanti and others of Balumedh, pargana Bheda and others.	1,894 11 4	.....	69 11 4 1905 April kist.
986 Ijmali.	Mal. Damaderpur, pargana Bhera.	2,159 0 0	Do. ...	10a. 4p. 15kt. 19b. 18g. 2k. 3 247 34440 bed.	Chintamoni Nayak and others of Nischintapur, pargana Bheda and others.	1,403 3 10½	.....	16 12 1 1905 April kist.
329 Ijmali	Taluk Malda, pargana Dhamnagar.	3,420 8 0	Do. ...	15a. 10p. 10kt. 12b. 15g. ...	Chaudhuri Birabhadra, Narindra Mahapatra and others of Kurigan, pargana Dhamnagar and others.	2,908 14 10	.....	166 6 7 1905 April kist.
1515	Taluk Benotara, pargana Kaima.	1,053 0 0	Whole ...		Paukaja Panda and others, of Samdihi, pargana Dolagram and others.	.....	203 3 11½ 1905 April kist.	.....
1311 6	Mahal Kasba Kamarda, pargana Kamardachaur.	3,563 0 0	Share ...	3a. 7p. 5kt. 15b. 15g. 2k 1kt. 4b. 18g. 1kt. 2b. 7g. 2k. 9u. 7g. 3kt.	Srichandan Bhuyan Brindaban Chandra Rai, of Gad Rentrapur, pargana Sahabander and others.	803 15 5½	.....	402 1 6 1905 April kist.
1344 3	Mal. Kusuda, pargana Kamardachaur.	1,693 0 0	Do. ...	8a.	Srichandan Bhuiyan Brindaban Chandra Rai, of Gad Rentrapur, pargana Sahabander.	846 8 0	.....	423 6 9 1905 April kist.
318	Taluk Napang, pargana Munjuri.	665 12 5	Whole ...	...	Gopimohan Rai, common Manager of Mahasay Radhakanta Rai and others, of at present Naripur, pargana Randiaorgara.		331 11 0 1905 April kist.	.....
3	Taluk Sarmanga, pargana Randiaorgara.	1,429 0 0	Do. ...	.....	Munshi Latifur Rahaman Ahmed of Isafpur, pargana Randiaorgara and others.	...	183 9 0 1905 April kist.	...
1031	Taluk Madhabnagar, pargana Randiaorgara.	1,984 0 0	Share ...	12a. 9p. 13kt. 9b. 17g. 1k. 2kt. 4b. 7g. 1k.	Raghunath Panigrahi and others of Srigunga, pargana Bayang and others.	1,587 12 11	.....	13 4 10 1905 April kist.
45 Ijmali.	Ma. Darara, pargana Senaut.	1,304 0 0	Do. ...	10a. 8p.	Radhanath Prasad Do, of Damoderpur, pargana Sunhat, and others.	869 5 4	... ..	434 10 7 1905 April kist.
48	Taluk Bolna, pargana Senaut.	1,084 0 0	Whole ...	.....	Munshi Latifur Rahaman Ahmed of Isafpur, pargana Randiaorgara and others.	... .	471 6 8 1905 April kist.	... .
126 Ijmali	Ar. Dogral, ma. Dolsahi, pargana Senaut.	9,889 0 0	Share ...	3a. 11p. 12kt. 1b. 10g. 2k. ...	Ghanasyam Mahapatra of Nasalapur, pargana Bayang and others.	2,451 14 4	.....	738 13 6 1905 April kist.
131 Ijmali	Taluk Ramkrishnapur, pargana Senaut.	896 0 0	Do. ...	11a. 1p. 16kt. 3b. 17g. 2k. 1½bed.	Adhikari Sadanand Das of Okra, pargana Senaut and others.	624 7 4	.....	115 8 11 1905 April kist.
1368	Ml. Bistnupur, pargana Sahabander.	3,616 0 0	Whole ...	....	Srichandan Bhuyan Brindaban Chandra Rai of Gad Rentrapur, pargana Sahabander.	.....	1,808 0 0 1905 April kist.	.
692 Ijmali	Taluk Batnupur, pargana Sisry.	1,445 0 0	Share ..	6a.	Prankristna Puthal of Brahmania, pargana Armala and others.	540 6 0	.....	13 3 3 1905 April kist.
1180 Ijmali	Tapa Purusanda, pargana Soso.	9,258 0 0	Do. ...	15a. 14kt. 3b.	Balabhadra Prasad Das Rajkumar Bairiganjan Bhuyan Mahapatra of Gopinathpur, alias Mangalpur, pargana Ranchas and others.	8,718 9 3	.....	66 3 4 1905 April kist.

* All other shares than that specified will be excluded from the sale.

Balasore Collectorate, the 3rd June 1905.

J. CORNES, Offg. Collector.

Advertisement of Sale.

NOTICE is hereby given that the proprietary right of Government, as specified in the conditions of sale below, to the undermentioned estates situate in the district of Jessore will be put up to sale at the subdivisional head-quarters, Jhenida, on the 18th July 1905, corresponding with the 2nd Sravan 1312 (B.S.).

The purchaser will be subject to the following conditions of sale:—

Conditions of Sale.

1st.—The estate to be sold to the highest bidder above the upset price, which will be fixed by the Collector at the time of sale. The purchaser of these estates will be considered as the proprietor of the estate, and the entire proprietary right of Government in such estate will be transferred to him, subject to the revenue fixed in perpetuity.

2nd.—The sale to be subject to existing leases and to the rights conferred by the settlement proceedings and by the laws in force, and purchasers to be bound to respect the rights of resident cultivators who have signed the schedule of assessment prepared by the Revenue authorities.

3rd.—If the amount of purchase-money do not exceed Rs. 100, the whole amount to be paid down at once.

4th.—If the amount of purchase-money exceed Rs. 100, one-fourth of the amount bid to be immediately deposited. If the balance be not paid by noon of the fifteenth day after the sale, reckoning the day of sale as one, or, if that day be a close holiday, then by noon of the first succeeding office day, the sale is to be cancelled (the sum deposited being forfeited to Government), and the estate to be again put up to sale at the risk of the defaulting purchaser after issue of advertisement, as in the case of original sale.

Number in the district roll.	Name of estate and pargana.	Approximate area in acres.	Government revenue assessed.	Remarks.
Tauzi No.		A. R. P.	Rs. A. P.	
313(*a*)	Gopalpore	102 2 23	201 15 0	
4126	Ashurhut	13 0 7 7	33 11 2	
4095	Ditto	1 1 38	2 11 6	
3977	Armukhi	0 3 17	1 9 6	
4169	Srifaltola and Rademalauchi	30 0 19 52	100 7 0	
3976	Armukhi	2 1 20 16	9 4 0	
3 73(*a*)	Khedapara	7 3 39	25 0 0	
3383	Khajurah	51 0 2·88	128 8 9	
3261	Khedapara	2 2 3·84	4 14 6	
3311	Suti-Mamunsia	1 1 11·2	3 8 0	

Jessore Collectorate, the 2nd June 1905.

S. K. AGASTI, Collector.

Advertisement.

NOTICE is hereby given that the proprietary right of Government, as specified in the conditions of sale below to the undermentioned estate, situate in the district of Jessore, will be put up to sale at the Subdivisona head-quarters Bangaon on the 8th July 1905, corresponding with 24th Ashar 1312 (B.S.).

The purchaser will be subject to the following conditions of sale:—

Conditions of Sale.

1st.—The estate to be sold to the highest bidder above the upset price which will be fixed by the Collector at the time of sale. The purchaser of this estate will be considered as the proprietor of the estate, and the entire proprietary right of Government in such estate will be transferred to him, subject to the revenue fixed in perpetuity.

2nd.—The sale to be subject to existing leases and to the rights conferred by the settlement proceedings and by the laws in force, and purchasers to be bound to respect the rights of resident cultivators who have signed the schedule of assessment prepared by the revenue authorities.

3rd.—If the amount of purchase-money do not exceed Rs. 100, the whole to be paid at once.

4th.—If the amount of purchase-money exceed Rs. 100, one-fourth of the amount bid to be immediately deposited. If the balance be not paid by noon of the fifteenth day after the sale, reckoning the day of sale as one, or, if that day be a close holiday, then by noon of the first succeeding office day, the sale is to be cancelled (the sum deposited being forfeited to Government), and the estate to be again put up to sale at the risk of the defaulting purchaser, after issue of advertisement, as in the case of original sale.

Number on the district roll.	Name of estate and pargana.	Approximate area in acres.	Government revenue assessed.	Remarks.
		A. R. P.	Rs. A. P.	
5344	Hudabishnupur	0 1 18$\frac{1}{4}$	... ...	This estate will be sold revenue-free.
5410	Ditto	1 3 11$\frac{11}{16}$	3 1 9	

Jessore, the 1st June 1905.

S. K. AGASTI, Collector.

Notification A.

NOTICE is hereby given, under sections 6 and 13, Act XI of 1859, that the undermentioned estates and shares of estates in the district of Puri will be put up for sale at the office of the Collector of that district on the 10th July 1905 at 12 noon for arrears of revenue and other demands which by law are realizable arrears of land revenue.

When in columns 5, 7 and 9 of the appended statement it is stated that only a share is to be sold, it is to be understood that a separate account is kept for that share, and that the other share or shares in the estate not specifically mentioned in column 5 are excluded from the sale.

Tauzi No.	Name of mahal and pargana.	Sadar jama of whole estate.	Whether the whole estate is to be sold.	If only a share is to be sold, specification of such share or shares.	Names of proprietors of property to be sold.	If only a share is to be sold, the sadar jama of such share.	If the whole estate is to be sold, the arrears due from it.	If only a share is to be sold, the arrears due from it.
1	2	3	4	5	6	7	8	9
		Rs. A. P.				Rs. A. P.	Rs. A. P.	Rs. A. P.
166 2	Taluk Ganeswarpur, pargana Banchas.	1,619 0 0	.....	Kismat 7a.	Chandamoni Debya, mother and guardian of Hanuman Khuntia (minor).	703 5 0	.....	79 8 0 Due for kist April 1905.
129	Killa Kokel, pargana Chabiskud.	1,708 0 0	Whole ...	.....	Balaram Das Bhagat and others.	.....	854 0 0	Ditto.
236 7	Taluk Lakshmiprasad, pargana Kurlow.	1,089 0 0	.....	Kismat 8a. 7p. 2k. 15b.	Jagannath Sahu and others ...	558 15 0	.....	5 5 0 Due for kist April 1905.

Puri Collectorate, the 3'0th May 1905.

J. R. BLACKWOOD, Collector.

Statement of the Affairs of the Bank of Bengal for the week ending 30th May 1905.

LIABILITIES.

		Rs.	A.	P.
Capital paid up		2,00,00,000	0	0
Reserve Fund		1,32,00,000	0	0
Public Deposits at Head Office	Rs. 1,04,80,389 13 4	1,87,79,329	0	6
Ditto ditto at Branches ,,	82,98,939 3 2			
Other Deposits at Head Office and Branches		11,<0,08,869	11	5
Bank Post Bills, &c.		11,36,850	4	6
Sundries		30,80,219	7	5
Rupees ...		17,02,05,268	7	10

ASSETS.

		Rs.	A.	P.
Government Securities		1,28,94,672	1	11
Other authorised investments		79,10,158	13	8
Loans on Government and other authorised securities		3,44,43,025	11	1
Accounts of Credit on ditto ditto ...		2,10,58,297	0	9
Bills discounted and purchased		3,55,46,958	8	3
Balances with other Banks		16,13,274	13	3
Bullion		...		
Dead Stock		18,54,947	7	4
Stamps		13,306	11	7
Sundries		12,66,595	15	6
		11,66,01,237	3	4
Cash and Currency Notes at Head Office*	Rs. 3,32,44,673 13 10	5,36,04,031	4	6
Cash and Currency Notes at Branches† ,,	2,03,59,357 6 8			
Rupees ...		17,02,05,268	7	10

* Includes Sovs. & ½ Sovs., value Rs. 1,94,130 0 0
† Do. do. do. ,, 2,12,857 8 0
Rs. 4,06,987 8 0

By order of the Directors,

E. DICKINSON,
Chief Accountant.

W. D. CRICKSHANK,
Secretary and Treasurer.

Rate for Demand Loans 4 per cent.
Percentage 69·12.

BANK OF BENGAL,
Calcutta, 1st June 1905.

(661—1)

Statement of Government Promissory Notes enfaced for payment of Interest in London, under deduction of amount retransferred to India, and outstanding in the books of the Bank of Bengal on the 31st May 1905.

PARTICULARS.	3 per cent. of 1896-97.	3½ PER CENT. LOANS—							4 PER CENT. LOANS—							4½ PER CENT. LOANS—				GRAND TOTAL.
		Of 1842-43.	Of 1854-55.	Of 1865.	Of 1879.	Of 1893-94.	Of 1900-01.	Total.	Of 1832-33.	Of 1835-36.	Of 1842-43.	Of 1854-55.	Transfer of 1865.	Reduced 4 per cent. loan of 1879.	Total.	Of 1870.		Transfer loan of 1879, 4½ per cent. portion.	Total.	
Balance of 15th May 1905 ...	93,59,000	1,62,36,500	10,71,55,200	2,24,17,300	1,24,21,600	.....	20,54,700	16,02,35,500	6,934	5,000	.....	3,500	40,800	2,500	58,734	5,000	...	29,500	34,500	16,97,36,734
ADD—																				
Amount of transferred to in London	.....	.....	.....	.....	.....	.....	.....	.....	.....	.....	.....	.....	.....	.....	.....	.....	...	.....	.....	.....
Amount enfaced at Madras up to 24th May 1905 ...	.....	1,000	.....	2,000	.....	.....	.....	3,000	.....	.....	.....	.....	.....	.....	.....	.....	...	.....	.....	3,000
Amount enfaced at Bombay up to 17th May 1905	.....	2,000	1,65,500	1,000	4,500	.....	500	1,73,500	.....	.....	.....	.....	.....	.....	.....	.....	...	.....	.....	1,73,500
Amount enfaced at Calcutta between 16th and 31st May 1905	.....	2,000	2,08,000	7,500	.....	.....	.....	2,12,500	.....	.....	.....	.....	.....	.....	.....	.....	...	.....	.....	2,12,500
	93,59,000	1,62,41,500	10,75,23,700	2,24,27,900	1,24,26,100	.....	20,55,200	16,06,74,400	6,934	5,000	.....	3,500	40,800	2,500	58,734	5,000	...	29,500	34,500	17,01,25,634
DEDUCT—																				
Amount written off in the London registers ...	.....	.....	14,500	3,000	.....	.....	.....	17,500	1*	.....	.....	.....	.....	...	1*	.....	...	.....	.....	17,001
Balance on 31st May 1905 ...	93,59,000	1,62,41,500	10,75,09,700	2,24,24,900	1,24,26,100	.....	20,55,200	16,06,57,600	6,933	5,000	.....	3,500	40,800	2,500	58,733	5,000	...	29,500	34,500	17,01,08,633

* Adjustment.

NOTE.—From 9th June 1867 to 31st Mar. 1905—Enfaced from India, 11,368 lakhs; retransferred from London, 11,037 lakhs.
" 1st April 1905 " 15th April " " " " 14 " " " " 1 lakh.
" 16th " " 30th " " " " 2 " " " " —
" 1st May " " 15th May " " " " 3 " " " " 3 lakhs.
" 16th " " 31st " " " " 4 " " " " —
11,391 " 11,041 "
11,041 "
Balance against India 350 "

J. GRAVES,
Offg. Superintendent.

W. D. CRUICKSHANK,
Secretary and Treasurer.

(670—1)

PUBLIC DEBT OFFICE, BANK OF BENGAL,
Calcutta, the 2nd June 1905.

Notice.

NOTICE is hereby given that all documents filed in the Land Registration cases enumerated in the list below will be disposed of according to departmental rules unless delivery of them is taken by the parties concerned within a month from the date hereof :—

Statement showing the Land Registration cases in which the parties have not taken back the documents filed therein.

Serial No.	Number of case and year.	Name of party.	Particulars of property in respect of which the documents were filed.			
			Division.	Block.	Holding.	Number of premises and the name of the street.
1	328 of 1898-89 ...	Rama Churan Samadar	South ...	XIII	274	29, Molonga Lane.
2	491 of ,, ...	Mr. Owen Arratoon	Do. ...	I	336	13, Gomes' Lane.
3	119 of 1899-99 ...	Abdul Samad	Do. ...	VIII	74	12, Moochipara Lane.
4	250 of 1891-92 ...	Monmohini Dassi	Do. ...	VII	333	83, Jaliapara Lane.
5	187 of ,, ...	Nistarini Debi and another ...	North ...	VII	259	21, Pataldanga Street.
6	566 of ,, ...	Hadya Nath Shee	South ...	II	169	35, Doctor's Lane.
7	699 of ,, ...	Khettermoni Debi	North ...	XXIV	175	28, Ram Mohan Shaha's Lane.
8	747 of ,, ...	Shahebzada Muhammad Farrack Shah.	South ...	XXI	11 & 11½	5, Government Place.
9	I/234 of 1893-93 ...	Binodini Dasi	North ...	XIII	174	8, Kali Das Singh's Lane.
10	I/175 of ,, ...	Anath Nath Deb	South ...	XVI	235	9, Kapalitola Lane.
11	I/181 of ,, ...	Girish Chandra Das	Do. ...	XIV	184	1, Ramhari Mitter's Lane.
12	591 of ,, ...	Sattya Santi Banerjee	Do. ...	XIII	170	71 to 76, Bowbazar Street.
13	532 of ,, ...	Lala Nirmal Bokas Nandi ...	Do. ...	XVII	55	32, Free School Street.
14	601 of ,, ...	Elahijan Begum	North ...	IV	276	80, Lower Chitpur Road.
15	I/290 of ,, ...	.....	Do. ...	X	111	42, Ratoo Sircar's Lane.
16	I/80 of 1893-94 ...	Kiron Chandra Chatterjee ...	Do. ...	XV	110	17, Kristo Das Pal's Lane.
17	289 of ,, ...	Ariff Ismile Bham	Do. ...	X	237	18, Raj Mohun Bose's Lane.
18	117 of ,, ...	Sasi Bhusan Banerji	Do. ...	XI	38	30, Theatre Road.
19	I/258 of ,, ...	Gobindo Chandra Mandle ...	Do. ...	XIX	192	33, Ramtaran Bose's Lane.
20	I/259 of ,, ...	Ditto ...	Do. ...	XIX	196	29, Ditto.
21	I/194 of ,, ...	Debnarain Raha	Do. ...	X	57	14, Ratoo Sircar's Lane.
22	I/329 of ,, ...	Guru Das Kundu Chowdhury...	South ...	XIII	591	42, Chandni Chowk.
23	329 of 1894-95 ...	Dwarka Nath Banerjee	North ...	I	342	5, Akhil Mistri's Lane.
24	404 of 1893-94 ...	Sydani Aftaban Nessa Bibi ...	South ...	IV	83	13, 14 & 16, Godai Khansama's Lane.
25	223 of 1895-96 ...	Narat Chandra Sen	North ..	XIV	319	22, Sukeas Street.
26	43 of ,, ...	Hem Chandra Bose *versus* Adharmoni Dasi.	Do. ...	XIII	97	12, Brindabon Mullick's Lane.
27	274 of ,, ...	Dwarka Nath Ganguly	Do. ...	XIV	420	6, Guru Prosad Chowdhuri's Lane.
28	305 of 1898-99 ...	R. Belchambers	Do. ...	XVII	111	43 & 43-1, Beniatolla Street.
29	411 of ,, ...	Monmohini Debi *versus* Ratto Kristo Chakravarti.	Do. ...	X	269	16, Ramprosad Shaha's Lane.
30	556 of 1899-1900 ...	Jotindra Nath Pal *versus* Kesub Das Mohanto.	Do. ...	XVII	366	37, Burtollah Street.
1	632 of ,, ...	W. Leslie	South ...	VIII	18	60, Dharamtolah Street.
32	56 of 1900-1901 ...	Monuron Nessa Bibi	Do. ...	XV	70	7, Syed Ismail's Lane.
33	594 of 1898-99 ...	Khadra Nessa Bibi *versus* Hiranjan Bibi.	Do. ...	II	230	26, Taltola Bazar Street.
34	477 of 1900-01 ...	Atul Krishna Ghose *versus* Gobinda Chandra Bose.	North ...	XXIV	10	21, Isaur Mill's Lane.
35	442 of ,, ...	Syed Biasat Ali *versus* Fatima Bibi.	South ...	IX	12	5, Wellesley 1st Lane.
36	439 of 1901-02 ...	Bhagwan Das Khettry	North ...	III	135	8, Phear's Lane.
37	46 of ,, ...	Mohendra Prosad Sandel *versus* Tarak Brahmo Lahiri.	Do.	XIV	171	36, Moddon Mitter's Lane.
38	249 of ,, ...	Abdul Wahid	South ...	XV	64	10, Kerr's Lane.
39	178 of ,, ...	Mir Imam Ali	Do. ...	IX	90	31-1, Marsden Street.
40	19 of ,, ...	Jager Nath Bysack *versus* Kanai Lall Marowari.	North ...	XVIII	105	1, Sibtolla Street.
41	501 of 1900-01 ...	Chunder Coomar Kundu ...	Do. ...	XIV	23	65, Baranossi Ghose's Street.
42	62 of 1901-02 ...	Naymoon Nessa Bibi	South .	XIV	246	118, Collinga Bazar Street.
43	362 of 1900-01 ...	Administrator-General, Bengal, as administrator to the estate of G. T. Rebeiro *versus* Bhagabat Ruda.	North	IV	44	274, Bowbazar Street.

Calcutta Collectorate, the 24th May 1905.

MAHANANDA GUPTA, Collector.

FORM II.

INSTRUCTIONS 97 AND 120.

Abstract of the Estates Partition Fund of district Patna for the year 1904-05, as required by section 42 Act V (B.C.) of 1897.

	Rs.	A.	P.
Balance at credit of the Fund on the 1st April 1904	8,449	13	3
Receipt during the year 1904-05	23,848	3	5
Total ...	32,298	0	8
Disbursements during the year 1904-05	20,372	1	10
Balance at credit on 31st March 1905	11,925	14	10

(ILLEGIBLE), for *Collector.*

BANKIPUR, *the 3rd June 1905.* (674—1)

APPENDIX B.

Abstract of the Partition Fund of district Darbhanga for the year 1904-05, prepared as required by Act V (B.C.) of 1897, section 48.

RECEIPTS.	Rs.	A.	P.	DISBURSEMENTS.	Rs.	A.	P.
Balance in hand on 1st April 1904 ...	28,351	4	5	Contribution towards establishments employed in the Commissioner's office under section 36 of the Act.	731	0	0
Received on account of estate ...	20,632	12	7	Salary of the Deputy Collector employed under section 43 of the Act.	1,977	6	
				His pension contribution	395	7	9
				His travelling allowance	347	1	0
				Salary of district establishment employed under section 35 of the Act.	2,604	2	4
				Pension contribution of ditto ...	83	14	0
				Travelling allowance of ditto ...	165	13	9
				Cost of establishments employed under section 35 of the Act.	3,446	1	0
				Refund of partition cost	232	9	2
				Contingent expenditure	12,002	10	7
				Balance in hand on 31st March 1905 ...	26,997	14	9
Total ...	48,984	1	0	Total ...	48,984	1	0

Lahoria Serai, the 1st June 1905. (665—1) W. B. HEYCOCK, Collector.

FORM II.

Abstract of the Estates Partition Fund of district Muzaffarpur for the year 1904-05, prepared as required by section 42, Act V (B.C.) of 1897.

	Rs.	A.	P.
1. Balance at credit of the Fund on 1st April 1904 ...	16,095	4	9
2. Receipt for the year 1904-05	32,916	13	4
	49,012	2	1
3. Disbursements during the year 1904-05	29,854	11	6
4. Balance at credit on 31st March 1905	19,159	6	7

E. V. LEVINGE, *Collector.*

MUZAFFARPUR PARTITION DEPARTMENT, *the 19th May 1905.* (666—1)

In the Court of the 1st Subordinate Judge of Muzaffarpur.

EXECUTION CASE No. 81 OF 1905.

Babu Ram Ghoolam Lal Sahu and Babu Baijnath Pershad Sahu, decree-holders, *versus* Chaudhri Barsati Singh, Chaudhri Sooruj Narayan Singh, Chaudhri Kali Pershad Singh and Chaudhri Radha Pershad Singh, majors, and Chaudhri Kishun Pershad Singh and Chaudhri Lachmi Pershad Singh *alias* Nathooni Pershad Singh, minors, through Babu Mahindra Narayan, vakeel and guardian of the said minors, judgement-debtors.

BE it known that the properties of the said judgment-debtors stated below will be sold for the realisation of the decretal amount due to the said decree-holder under decree, dated the 13th of August 1904, on 15th July 1905, for the realization of Rs. 1,06,539-7-3:—

1. Ten gundas pucka out of 16 annas mahal Sadullahpur, asli and dakhli, with all villages and tolas dakheli and saili of the said mahal bearing tauzi No. 6504, within the jurisdiction of thana and sub-registry office Bahera, district Darbhanga, whereof the area of 16 annas is 500 acres 18 poles, out of which judgment-debtor's proportionate share is 78 acres 2 poles 9 kanwas, the entire rental asli with dakhli assessed with a Government revenue of Rs. 1,544-0-6, out of which Rs. 35-12 fall the judgement-debtor's share advertised for sale. Value estimated, Rs. 780.

2. Ten gundas pucka out of 16 annas of mahal Sadullahpur with tolas belonging to the said mahal, pargana Dharaur, bearing tauzi No. 3377, under the jurisdiction of thana and sub-registry office Bahera, district Darbhanga, whereof the area of 16 annas is 2,354 acres 3 roods 38 poles and the proportionate share of the said judgment-debtor's is 42 acres 1 rood 4½ poles and the Government revenue of the entire mahal asli with dakheli Rs. 1,247-0-9 with the proportionate Government demand Rs. 16-6-9. Value estimated, Rs. 425.

3. Ten gundas out of 16 annas of village Saadatnagar Poorkhotimpur dakhli Sadullahpur with tolas belonging to the said village, pargana Dharaur, under the jurisdiction of thana and sub-registry office Bahera, district Darbhanga, bearing tauzi No. 3377, whereof the area of 16 annas is 2,263 acres 2 roods 32 poles and the proportionate share of the judgment-debtors is 39 acres 1 rood 38½ poles with a Government revenue of asli and dakheli Rs. 2,247-0-9 and with the proportionate Government revenue Rs. 15-2-8. Value estimated, Rs. 400.

NALINI NATH MITRA, Sub-Judge.

Muzaffarpur, the 30th May 1905. (675—1)

NOTICE.

In the 2nd Court of the Munsif at Cuttack.

MONEY EXECUTION CASE No. 187 OF 1905.

Gadai Senaputty, decree-holder, *versus* Kunja Behari Parida and others, judgement-debtors.

TO be sold by the Nazir of the District Judge of Cuttack in the Court premises at 12 o'clock, on the 15th July 1905, for realization of Rs. 1,934-11-12 with the mortgage lien of Gadai Senaputty, the said decree-holder, for Rs. 1,644-8-9, the following property of the judgement-debtors:—

3 annas 2 gandas share belonging to judgement-debtors in Mokadami Mouza Mahookhanda pargana Kothdesh, bearing tauzi No. 71 of the Puri Collectorate, station Pipili. Government revenue payable for the entire Mokadami is Rs. 391-11-0½, and that payable for the above mentioned share is Rs. 75 14as. 9g. 11b. 10k. Estimated value is Rs. 300.

HARI LAL MUKERJEE,
Munsif, 2nd Court, Cuttack.

Cuttack, the 31st May 1905. (672—1)

SALE PROCLAMATION.

In the Court of the District Judge of Midnapore.

EXECUTION CASE No. 43 OF 1904.

Aga Hussain Ali of No. 45 Mirzapore Street, Calcutta, decree-holder, *versus* Prince Mahammed Buktyor Sha, C.I.E., of Tallyganja, Calcutta, judgement-debtor.

THE mining rights of the undermentioned estate with the exception of the following garhs and lands and temples dedicated to certain gods and goddesses will be sold by the Nazir of the District Judge's Court, Midnapore, in the sale-room at 6 A.M., on the 15th June 1905, for recovery of Rs. 1,00,000, subject to—

(1) The lease of Messrs. Gillanders, Arbuthnot & Co., of the mining rights of some of the mauzas in the estate and for which the judgement-debtor receives rent, etc., from the Company.

(2) The mortgage of Babu Kanai Lal Khan, No. 118 Beniatolla Street, Calcutta, for Rs. 8,048-2-9, and (3) the mortgage of Bijoy Chandra Sinha of No. 146 Baranashi Ghose's Street, Calcutta, for Rs. 17,164-13-6.

Be it stated that the judgement-debtor is, by terms of his lease, liable to pay an annual sum of Rs. 2,000 as royalty to the lessor if he does not commence mining operations and sale of the mineral produce taken out before January 1906.

Estate Dhalbhum, i.e., pargana Ghatsila, approximate area 1,100 square miles, partly within pargana Singhbhum, thana Ghatsila, Sub-Registry and Chowki Chaibassa, and partly within the district of Midnapore, thana and Sub-Registry Jhargram.

Boundary.—On the north by Silda pargana in the Midnapore district and Barabhum in the Manbhum district; on the east by parganas Nayabasan, Belaberia, Jamboni and Silda in the Midnapore district; on the south by Maharbhaja in the district of Cuttack, and on the west by the parganas Samnikola in the district of Singhbhum.

Approximate value, Rs 1,00,000.

List of garhs and temples and places dedicated to certain gods and goddesses.

		Bighas.
1.	Ghatsila Garh, approximate area ...	300
2.	Narsingha Garh, ditto ...	500
3.	The land occupied by Rankini Debi in mauza Garh Raghunathpore, approximate area	10
4.	The land occupied by Mohadeo Jieu in mauza Garh Raghunathpore, approximate area	15
5.	The land occupied by Kapileswor Jieu in mauza Kokpora, approximate area ...	15
6.	The land occupied by Rankini Debi in mauza Kokpora, approximate area ...	10
7.	The land occupied by Sarnabati Debi Thakurani in mauza Kesorda, approximate area	10
8.	The land occupied by Kameswar Jieu in mauza Kamar Ara, approximate area	25
9.	The land occupied by Jagarnath Jieu in mauza Baharegore, approximate area	25
10.	The land occupied by Moha Sambhu Jieu in mauza Chitreswar, taraf Parulya, approximate area	25
11.	The land occupied by Jagannath Jieu in mauza Nai Jangal, approximate area	25
12.	The land occupied by Bhutnath Jieu, in mauza Goda, approximate area ...	10
13.	The land occupied by Rankini Debi in mauza Bend, taraf Parihati, approximate area	10
14.	The land occupied by Rankini Debi in mauza Chakulya, approximate area ...	10
15.	The land occupied by Kanai Sahar Jieu, approximate area	20
16.	The land occupied by Gotta Sora Jieu in mauza Motya Bandi taraf, approximate area	50
17.	The land occupied by Bhairab Chand Jieu in mauza Dompara taraf, approximate area	50
18.	The land occupied by Jagarnath Jieu in mauza Saramda, taraf Haldipukhur, approximate area	10
19.	The land occupied by Mohadeb Jieu in mauza Haldipukhur, approximate area	10
20.	The land occupied by Rankini Debi in mauza Haldipukhur, approximate area	10
21.	The land occupied by Telaipat Debi, approximate area	10
22.	The land occupied by Chandan Behar Jieu in Harina, approximate area ...	20
23.	The land occupied by Roghunath Jieu in mauza Karansai, taraf Alkosi, approximate area	25

H. F. E. B. FOSTER, Offg. District Judge.

Midnapore District Judge's Office, the 1st June 1905. (667—1)

Notice.

PURSUANT to a decree of the High Court of Judicature at Fort William in Bengal in its Ordinary Original Civil Jurisdiction, dated the 8th day of May 1905, and made in suit No. 207 of 1905, wherein William Brock Keen was plaintiff and the Administrator General of Bengal defendant, the creditors of William Henry Price, deceased, late of No. 29 Queen Anne's Gate in the City of Westminster, London, and of Chitpore in the Suburbs of Calcutta, defendant, who died in or about the 26th August 1900, are on or before the 15th day of July 1905 to send to the office of the Registrar of this Court on its Original Side, their names, addresses and descriptions, the full particulars of their claims, a statement of their accounts, and the nature of the securities (if any) held by them or in default thereof they will be peremptorily excluded from the benefit of the said decree.

Every creditor holding any security may produce or transmit the same to the Registrar with the particulars of his claim or shall produce the same before the Official Referee of the High Court in the Court-house on Saturday, the 22nd day of July 1905 at 12 o'clock noon, being the time appointed for adjudicating on the claims.

W. R. FINK, Registrar.

Atkinson & Co., Attorney.

High Court, Original Side, Calcutta, the 29th May 1905. (601—2)

Notification.

TO be peremptorily sold by the Registrar of the High Court of Judicature at Fort William in Bengal in its ordinary Original Civil Jurisdiction in his sale-room in the Court-house on Saturday, the 1st day of July 1905, at the hour of 12 o'clock noon, pursuant to a decree and order of the said Court made in suit No. 395 of 1899 (wherein Nafar Chunder Kundu and others are plaintiffs and Mussamut Joobunnessa Bibee and others are defendants), and dated, respectively, the 20th July 1899 and 11th April 1902, the undermentioned properties:—

Lot I.—No. 18 Gooloo Ostagur's Lane, being a piece of rent-free land in Sootanuty in the Northern Division of the town of Calcutta, containing by estimation 6 cottahs 3 chitaks and 5 square feet, more or less, and bounded on the north and west by the premises No. 19-1 Gooloo Ostagur's Lane, on the south by Gooloo Ostagur's Lane, and on the east partly by the premises No. 17 Gooloo Ostagur's Lane and partly by the premises No. 68-7 Durga Churn Mittra's Street.

Lot II.—All that 12 bighas of garden land, formerly No. 44, but now No. 35 Muraripukher Road in Maniktolla, holding No. 124, subdivision X, Grand Division 11, dihi Panchannogram, in the district of 24-Parganas, mauza Ultadinga Bagmari, thana Ultadinga, sub-registry Sealdah, paying an annual Government revenue of Rs 21-12-6 to the Collector of 24-Parganas, and bounded on the north by the garden of Haridhone Mozumdar, on the east partly by the garden of Haridhone Mozumdar and partly by the land of Kaviraj Nibaran Sen, on the south by the garden of Norendra Nath Bose, and on the west by Muraripukher Road.

The abstract of title and conditions of sale may be seen at the Registrar's office at the High Court and at the office of Babu Bhupendra Nath Basu at No. 10 Hastings Street, Calcutta, on any day before the sale and will be produced at the sale.

W. R. FINK, Registrar.

Bhupendra Nath Basu, plaintiff's Attorney.

High Court, Original Side, Calcutta, the 19th day of May 1905. (608—1—392)

Wanted

A LADY DOCTOR for the Lady Curzon Zenana Hospital, Birbhum, on a monthly salary of Rs. 50, with free quarters. Applicants must state their age and caste and enclose copies of their testimonials. Applications will be received by the undersigned up to the 12th June 1905.

A. A. ALLISON, Honorary Secretary,

Lady Curzon Zenana Hospital, Birbhum.

Suri, the 1st June 1905. (671—1)

Wanted

AN Overseer for the Sadar subdivision of the District Board, Khulna, on Rs. 60—4—80, *plus* travelling allowance, Rs. 37-8 per month.

A plucked B E strong in estimating and road projects is required. Apply on or before the 25th June 1905 to

H. D. CHATTERJEE, District Engineer.

Khulna, the 1st June 1905. (662—3)

Wanted

TWO B.Sc.'s, one for the post of the Science Teacher of the Rangpur Zillah School and the other for the post of a Teacher of Mathematics and Science in the Ranchi Industrial School, each on a salary of Rs. 50 (fifty rupees) a month, outside the list of the Subordinate Educational Service.

Applications will be received up to the 24th June 1905.

HARI DAS BANERJEE, Personal Asst.,
for Director of Public Instruction, Bengal.

Calcutta, the 3rd June 1905.

Wanted

A CIVIL VETERINARY ASSISTANT for the Angul District and three Wards Tributary States. Salary Rs. 50, personal allowance Rs. 10, and fixed travelling allowance Rs 15 per month. Applications with copies of testimonials to be submitted before the 15th June 1905.

Applicants to state age.

R. McLEOD SMITH, Deputy Commissioner.

Angul, Orissa, the 16th May 1905.

WANTED for Brahmanbaria Municipality in Tippera a survey-passed Overseer. Pay Rs. 25 with prospect of increment. An English-knowing man who has served in any Municipality or has knowledge in municipal works will be preferred. The applications will be received by the undersigned up to 15th June 1905.

BEPIN BEHARY DATTA, Vice-Chairman.

Brahmanbaria, the 18th May 1905. (603—2)

WANTED a Temporary Surveyor and Draftsman for the District Engineer's office, Nadia. Pay Rs. 25 a month with an allowance of Rs. 10 when in field.

Applications with copies of testimonials will be received by the undersigned on or before the 10th June next.

The selected candidate will have to join at once.

SATIS CHUNDER CHATTERJEE, District Engineer.

Krishnagar, the 24th May 1905. (656—2)

WANTED an assessor to assess one of the wards of the Bhadreswar Municipality. The work to be finished within one month. Candidates must apply before 8th June 1905, stating qualifications and terms, to Chairman, Bhadreswar Municipality.

The 30th May 1905. (657—2)

WANTED by the District Board of Faridpur a Sub-Inspector of Schools for about five months on a salary of Rs. 37-8 with fixed boat allowance of Rs. 45 a month. None need apply who is not qualified under the rules. Applications will be received up to the 17th June 1905.

G. C. MUKERJI, Chairman.

Faridpur District Board, the 2nd June 1905. (678—1)

Notice.

WANTED a Head Clerk for the Serampore Subdivisional Office on a salary of Rs. 60–2–70 from 1st July 1905. Applications will be received by the undersigned up to 15th June 1905.

Thorough experience in Revenue and Criminal work is necessary.

S. K. GHOSE, *for* Collector.

Hooghly, the 1st June 1905. (664–2)

Notice.

WANTED an Accountant for this Collectorate on a salary of Rs. 80—4—120 per mensem. Applications for the post will be received by the undersigned up to 24th June 1905.

None need apply who has not had experience as a Collectorate Accountant.

Each application should be accompanied by a statement containing a detailed history of the applicant's past and present services, his educational qualification, the date of his birth and a statement showing the names of his relatives in Government service and the post held by each relative.

The successful candidate will be required to furnish a bond for good conduct in the sum of Rs. 250 with two sureties.

J. H. KERR, Collector of Midnapore.

Midnapore, the 5th June 1905. (679—1)

Notice.

WANTED a Lecturer on Annuities and Insurance for the Evening classes in connection with Commercial Education in the Presidency College on an allowance of Rs. 1,500 a year.

Preference will be given to a person who is employed in an Insurance Office.

Applications with copies of testimonials will be received by the undersigned on or before the 20th June 1905.

P. K. RAY,

Offg. Principal, Presidency College.

Presidency College, Calcutta, the 16th May 1905.

Notice.

List of unclaimed goods lying in the Custom House Wharf.

Vessel.	Mark and No.	Description of packages.
S. S. "Neuenfels"	M. H. 1768	1 case air-guns and ammunition.

The above package will be disposed of, if not cleared on or before the 14th June 1905, under section 88, Sea Customs Act.

B. FOLEY,

Offg. Collector of Customs.

Custom House, Calcutta, the 20th May 1905.

CORPORATION OF CALCUTTA.

THE General Committee having previously given notice of their intention and no objection having been received within one month from the date of the publication of such notice, hereby under section 350 (4) of Act III (B.C.) of 1899, define the general line of buildings of a portion of Government Place at its junction with Esplanade Row East in accordance with the plan approved by the General Committee on the 15th March 1905.

C. F. PAYNE,

Acting Chairman of the Corporation.

MUNICIPAL OFFICE, the 4th June 1905. (677—1)

ATUL KRISHNA RAY, Pleader, Alipur, intends to be enrolled as a Vakil, High Court, Calcutta.

(578—4—339)

NOTICE.

Bank of Bengal.

MR. H. GRAY has, on return from leave, resumed his appointment of Deputy Secretary and Treasurer, *vice* Mr. W. D. McKewan, who reverts to his appointment of Inspector of Branches.

Mr. A. C. Hann is placed in temporary charge of Delhi Branch, *vice* Mr. J. B. Spicer, who goes on short leave.

By order of the Directors,

W. D. CRUICKSHANK,

Secretary and Treasurer, Bank of Bengal.

Calcutta, 5th June 1905. (676—1)

The Sarun Company, Limited.

NOTICE is hereby given that the following Resolutions were passed at an Extraordinary Meeting of the Shareholders of the Company, held at the Registered Office, No. 12 Mission Row, Calcutta, on Friday, the 19th day of May 1905, at 12-30 P.M.—

1. That it has been proved to the satisfaction of the shareholders that the Company cannot by reason of its liabilities continue its business, and that it is advisable to voluntarily wind up same under the provisions of the Indian Companies Act 1882 to 1896.

2. That Mr. T. D. Wood be appointed Liquidator for the purpose of winding up the affairs of the Company.

BEGG, DUNLOP & Co., Managing Agents.

Calcutta, the 24th May 1905. (602—1—391)

Notice.

IN order to reduce the balance at the credit of the Zamindari Dak Cess Fund of the district of Backergunge, the Board of Revenue have in their letter No 283A.—T, dated 19th May 1905, sanctioned remission of the Dak Cess demand for the kist of January 1906 of that district

H. C. STREATFEILD, Collector.

Backergunge Collectorate, the 2nd June 1905.

Estate Marian Martha Arabella Gouldsbury, deceased, wife of Colonel D. E. Gouldsbury.

NOTICE is hereby given that all creditors and other persons having any claims against the estate of the deceased abovenamed are hereby required to send in writing the particulars thereof to Messrs. King, Hamilton & Co., 7 Hare Street, Calcutta, on or before the 10th day of July 1905, after which date the undersigned will distribute the assets of the estate of the said deceased among the parties entitled thereto having regard to the claims of which he has then had notice.

And notice is hereby further given that the undersigned will not be liable for the assets or any part thereof so distributed to any person of whose claim he shall not have had notice at the time of such distribution.

A. J. KER,

Administrator with Will annexed of the Property and Credits of the deceased,

7 Hare Street, Calcutta.

Dated this 23rd day of May 1905. (598—3)

Lost.

THE Government Promissory Note No 109883 of the 3½ per cent. loan of 1865 for Rs. 5,000, originally standing in the name of Rajoballa Dabee, and last endorsed to Hrishikesh Chatterjee, the proprietor, by whom it was never endorsed to any other person, having been lost, notice is hereby given that payment of the above note and the interest thereupon have been stopped at the Public Debt Office, Bank of Bengal, Calcutta, and that application is about to be made for the issue of duplicate in favour of the proprietor. The public are cautioned against purchasing or otherwise dealing with the abovementioned security.

Name of the advertiser—HRISHIKESH CHATTERJI.

Residence—Kanchrapara, district Nuddia.

(649—3—396)

NOTICE TO CREDITORS.

In the Goods of Elizabeth Steer Onslow deceased.

NOTICE is hereby given that Letters of Administration with copy Will and two codicils annexed to the property and credits of the deceased above named having, on the 4th day of May 1905, been granted to Frederick Henry Eggar, all creditors and other persons having any claim against the estate of the abovenamed deceased are hereby required to send in writing the particulars thereof to the undersigned on or before the 1st day of July 1905 after which date the assets of the estate of the said deceased will be distributed by Frederick Henry Eggar, the Administrator, amongst the parties entitled thereto having regard to the claims of which he has then had notice. And notice is hereby further given that the said Frederick Henry Eggar will not be liable for the assets or any part thereof so distributed to any person of whose claim he shall not have had notice at the time of such distribution such notice to be sent to the undersigned.

Dated this 29th day of May 1905.

THOS. H. WESTMACOTT,
30-2 Dalhousie Square,

Attorney for Frederick Henry Eggar, Administrator to the Estate of the deceased.

(610—3—396)

INSOLVENT NOTICES.

In the matter of RAM NATH, lately carrying on business as dealer in piece-goods at Nos. 162 and 164 Harrison Road, Barra Bazar, in the town of Calcutta, unedr the style and firm of RAM NATH PANDIT, an insolvent.

On the 8th day of December last, it was, on the petition of Buktearmull Abbhar, a creditor of the said insolvent, adjudged that the said Ram Nath hath committed an act of insolvency under the provisions of the Act XI, Vic. Cap. XXI, and by another order of the same date the estate and effects of the said insolvent were vested in the Official Assignee.

Krishna Kissore De, Attorney. (613—2

In the matter of KANYE LALL BURMAN, an insolvent.

Notice that an application for an *ad-interim* protection order has been this day made by the said insolvent, and that such application will be heard and disposed of by the Acting Commissioner of the Insolvent Court on Monday, the 12th day of June instant, at the hour of half-past 10 o'clock in the forenoon.

☞ Any creditor of the said insolvent desirous of opposing such application must appear before the said Court at the time and place aforesaid.

Manick Lall Seal, Attorney. (682—1)

NOTICE.

In the 2nd Court of the Munsif at Alipore.

INSOLVENCY CASE No. 25 OF 1904.

ADHORE CHANDER KHAN, son of late Shib Chander Khan of Khiderpore, Monsatolla, thana Watgunge, was on the 3rd February 1905, declared an insolvent.

DURGA DAS BOSE,
Munsif, 2nd Court, Alipore, invested with power of a District Court under secs. 344 to 349, C. P. C.

Alipore, the 2nd June 1905. (680—1)

NOTICE.

In the 2nd Court of the Munsif at Alipore.

INSOLVENCY CASE No. 4 OF 1905.

BOLORAM DAS AGOREWALA, son of late Gobordhone Das Agorewala of Khiderpore, thana Watgunge, was on the 29th April 1905, declared an insolvent.

DURGA DAS BOSE,
Munsif, 2nd Court, Alipore, invested with powers of a District Court under secs. 344 to 349, C. P. C.

Alipore, the 2nd June 1905. (681—1)

In the Court of the District Judge of Bhagalpur.

INSOLVENCY CASE No. 2 OF 1905.

Madho Sahu, son of Tengar Sahu, resident of Sirajabad, chuk Shah Mohammad, pargana Ballia, zila Monghyr—petitioner.

NOTICE is hereby given that the above-named petitioner, Madho Sahu, has been declared an insolvent by this Court on the 3rd April 1905, under the provisions of the Code of Civil Procedure, and the Nazir of this Court has been appointed receiver in the case.

L. C. ADAMI,
Offg. District Judge.

Bhagalpur, the 3rd June 1905. (673—1)

Notice.

MOHENDRA NATH JEB, son of late Suarup Jeb of Kasipore, thana Chitpore, has been declared an insolvent under order of the Court dated 20th May 1905 in case No. 6 of 1905 of this Court.

KUNJA BIHARI GUPTA, Munsif,
2nd Court, Sealdah.

Dated Sealdah, the 29th May 1905. (669—1—397)

In the Court of the District Judge, 24-Parganas.

INSOLVENCY CASE No. 24 OF 1904.

In the matter of G. W. Lord and Mrs. A. Lord, insolvents

NOTICE is hereby given that G. W. Lord and Mrs. A. Lord of 19 Circular Garden Reach Road, Khidderpore, pargana Magura, thana Watgunge, district 24-Parganas, were declared insolvents on 16th May 1905. The 16th day of June 1905 is fixed for creditors to prove their debts.

R. R. POPE, District Judge.

District Judge's Court, 24-Parganas, dated Alipore, the 27th May 1905. (658—1)

CALCUTTA POST OFFICE NOTICE.

Mails for—	Date and hour of closing at the General Post Office, Calcutta.		Route by which despatched.
United Kingdom, Aden, Egypt, Europe, America, West Africa *vid* United Kingdom and East Africa *vid* Aden (and also South Africa, if superscribed on the cover *vid* United Kingdom or Aden).	1905. June 8	P.M. At 6 30	Per P. & O. steamer from Bombay.
Parcels and money-orders for the United Kingdom and other Foreign places.	,, 7	Parcels, 5 P.M.; M.-O., 4 P.M.	Ditto ditto.
* Australasian Colonies ...	,, 12	At 7-30	*Vid* Tuticorin and Colombo.*
† Straits Settlements (also China and Japan, if the Steamer's name is superscribed on the cover).	,, 9	,, 8-30	Per steamer *Kumsang*.
Burma	,, 8	,, 7-30	Per B. I. S. N. Co.'s steamer.
Burma, Penang and Singapore.	,, 10	,, 7-30	
Akyab, Kyaukpyu and Sandoway.	,, 9	,, 7-30	
Burma, Tavoy and Mergui ...	,, 12	,, 7-30	Per steamer *Pongola* from Colombo.
South Africa (Letters) ...	,, 10	,, 7-30	
Ditto (Parcels) ...	,, 10	,, 5	
Ditto (Letters) Supplemental.	,, 11	,, 7-30	
Ditto (Parcels) Supplemental.	,, 11	,, 5	

* Although the date entered in column 2 is, as far as can be calculated, the latest safe date of posting for the next Mail steamer, full allowance being made for the steamer being in advance of her published timing, Mails for the places mentioned in column 1 are despatched daily to Tuticorin, so that they may proceed by any steamer from Colombo that has been unusually accelerated or retarded, or by any special opportunity that may be afforded by a steamer not belonging to one of the regular lines.

† Correspondence for China and Japan is despatched daily to Tuticorin, so that it may proceed by the first steamer from Colombo.

1. The letter-box for Inland articles will be cleared for the forenoon Mails at the following hours:—

For Goalundo, Arakan and Chittagong, at 5-45 A.M.
For Midnapore and Orissa districts, at 9 A.M.
For the Eastern districts, as far as Dacca and Mymensingh, at 6-15 A.M.
For Khulna and Jessore districts, at 7 A.M.
For Bombay, Central Provinces and Midnapore *vid* Bengal-Nagpur Railway, at 11-15 A.M., and with a late fee of ½ anna up to 11-40 A.M.

2. The letter-box will be cleared for the evening Mails at the following hours, viz.:—

For the East Indian Railway Loop Mail, at 2-30 P.M., and with a late fee of ½ anna up to 2-55 P.M.
For the Northern Bengal, Darjeeling and Assam Mails, at 3-25 P.M., and with a late fee of ½ anna up to 3-50 P.M.
For the Bombay Mail *vid* Jubbulpore, at 6 P.M., and with a late fee of ½ anna up to 6-30 P.M.

For the Punjab Mail, at 7-30 P.M.
For Midnapore, Orissa, Madras Presidency and Ceylon, at 7-30 P.M.
For the Khulna Mail, at 7-30 P.M.
For the Eastern Bengal Mail, Darjeeling, and places on the Darjeeling-Himalayan Railway, at 7-30 P.M.

and with a late fee of ½ anna up to 8 P.M. and with a late fee of 1 anna up to 8-45 P.M.

3. Late registered letters will be received between the following hours:—

For the Bombay Mail *vid* Jubbulpore, from 5 P.M. to 6-15 P.M.
For the Punjab Mail, from 6 P.M. to 7 P.M.
For the Eastern Bengal Mail, from 6 P.M. to 7 P.M.
For the Khulna Mail, from 6 P.M. to 7 P.M.
For Midnapore, Orissa, Madras Presidency and Ceylon, from 6 P.M. to 7 P.M.

NOTE.—The late fee on each registered letter will be 2 annas, which must be prepaid in stamps on the letter.

4. Articles for Burma and for Port Blair by sea are received without late fee up to 7-30 P.M., and with a late fee of ½ anna up to 8 P.M.

5. On the latest safe day of despatch of Mails for the Australasian Colonies, or any other Foreign Countries, *viâ* Madras or Tuticorin, the letter-box for Foreign articles will be cleared for the last time at 7-30 P.M., and late letters and papers fully prepaid will be received up to 8 45 P.M.

6. On the day of despatch of the Mail for Europe (Thursday) the letter-box for Foreign articles will be cleared for the last time for articles, without the late fee, at 6-30 P.M., and late letters and papers fully prepaid will be received up to 6-45 P.M. Late registered articles will be received from 5 to 6 P.M. On the day of despatch of any Foreign Mail by sea, the letter-box will be cleared for the last time, without the late fee, up to 8-30 P.M., and late letters and papers up to 9 P.M. The late fee for Foreign articles is 4 annas, which must be prepaid in stamps affixed to the articles.

CALCUTTA G. P. O., *The 5th June 1905.*

JOHN OWENS, *Presidency Postmaster.*

Nadia Rivers.

Report showing the least depths of water for the week ending Friday, the 2nd June 1905.

Name of River.	Reach of River.	Least depth of water sounding.	Remarks.
		Ft. in.	
Bhagirathi.	Entrance from Ganges	4 0	
	Thence to Geriah	5 0	Momintola.
	From Geriah to Jangipur ..	4 6	Kanupur.
	,, Jangipur to Berhampore	3 0	Lalbag.
	,, Berhampore to Katwa	3 0	Bhootghat.
	,, Katwa to Nadia	4 0	Goteparah.
Bhairab-Jalangi.	Entrance from Ganges ...	6 0	
	Thence to Akriganj ...	6 0	Khamardiar.
	Akriganj to junction of the Bhairab and Jalangi ...	4 0	Deboipur.
	Thence to Patkabari	6 0	Lalnagar.
	Patkabari to Nadia ...	4 0	Gharni.
Mathabhanga.	Entrance from Ganges .	3 0	
	Thence to Dewanganj .	1 3	Dewangan).
	From Dewanganj to Shikarpur	0 11	Hakam.
	,, Shikarpur to Boalia ...	2 6	Bharal.
	,, Boalia to Chuadanga ...	2 3	Muhammadpur.
	,, Chuadanga to Kissengani and Hanskhali	6 0	Raypur.

Gauge Readings.

	Locality.	Date.	Hour.	Height above zero.	Height above mean sea-level.	Remarks.
Ganges ...	Sahibganj	3-6-1905	A.M. 6	Ft. 2·96	Ft. 70·66	Rise.
	Rampur Boalia	3-6-1905	Noon	4·84	66·84	Fall.
	Entrance of Bhagirathi Geriah	4-6-1905	A.M. 7	8·75	53·75	Rise.
	Entrance of Bhairab-Jalangi Akriganj ...	4-6-1905	7	3·90	41·86	Steady.
	Entrance of Mathabhanga ...	...	...	...	...	...
Bhagirathi.	Jangipur ...	4-6-1905	A.M. 8	25·60	52·00	Rise.
	Berhampore ...	5-6-1905	7	7·10	40·85	Do.
	Katwa ...	2-6-1905	P.M. 5	11·60	26·76	Do.
Jalangi ..	Krishnagar ...	...	..	3·82	...	...
	Sarupganj ...	3-6-1905	Noon	7·90	7·90	Rise.
Mathabhanga.	Hanskhali ..	3-6-1905	12 P.M. 4	8·93	16·89	Do.

A. K. BANERJI, Accountant,
for *Exe. Engr., Nadia Rivers Division*

Berhampore, the 5th June 1905.

THE INDIAN LAW REPORTS.

Published in FOUR SERIES, viz.:

CALCUTTA, MADRAS, BOMBAY AND ALLAHABAD.

THE Indian Law Reports, published under the authority of the Governor General in Council, are printed in monthly Parts, which are issued, as soon as possible after the first of each month, at Calcutta, Madras, Bombay and Allahabad, respectively.

The Reports comprise four Series—one for the Calcutta High Court, a second for the Madras High Court, a third for the Bombay High Court, and a fourth for the Allahabad High Court.

The cases heard by the Privy Council on appeal from each High Court are reported in the Series for that High Court. Cases heard by the Privy Council on appeal from Provinces in India not subject to any High Court are reported in the Calcutta Series.

The Calcutta Series is distributed by the Bengal Secretariat Book Depôt: and the Madras, Bombay and Allahabad Series are distributed direct from Madras, Bombay and Allahabad, respectively.

Persons desiring to subscribe for or purchase the Reports should apply to—

the Officer in charge, Bengal Secretariat Book Depôt, Calcutta,
or
the Superintendent, Government Press, Madras, or
the Superintendent, Government Central Press, Bombay, or
the Curator of Government Books, United Provinces of Agra and Oudh, Allahabad.

PRICES.

THE terms of subscription, and the terms on which current issues and back numbers are sold, are as follows:—

	Without postage.	With Indian postage.	With Foreign postage.
	Rs. A. P.	Rs. A. P.	Rs. A. P.
COMPLETE SERIES—			
Current issues, per annum	.....	22 8 0	28 0 0
Back numbers, per annum	20 0 0	22 8 0	28 0 0
CALCUTTA SERIES—			
Current issues or back numbers, per annum ..	10 0 0	12 8 0	14 0 0
MADRAS, BOMBAY or ALLAHABAD SERIES—			
Current issues or back numbers, per annum ...	6 0 0	7 0 0	8 0 0
ANY MONTHLY PART—			
Calcutta Series	2 0 0	2 0 0	2 0 0
Madras Bombay or Allahabad Series	1 0 0	1 0 0	1 0 0

All payments must be made in advance. Remittances to Calcutta should be addressed to the TREASURER, BENGAL SECRETARIAT, *Writers' Buildings, Calcutta*.

PARTS OUT OF STOCK AND DUPLICATE COPIES.

WHEN a requisition is received for any set of the Reports, and any Parts are out of stock, the following deduction from the foregoing rates is made for such Parts:—

	Without postage.	With Indian postage.
	Rs. A. P.	Rs. A. P.
CALCUTTA SERIES—		
All Parts for one year	7 2 6	8 6 3
Any one Part	0 8 9	0 10 3
MADRAS, BOMBAY or ALLAHABAD SERIES—		
All Parts for one year	4 4 6	4 11 3
Any one Part	0 5 3	0 5 9

If any Part is lost in transit to a subscriber, and the fact is reported to the office of distribution within three months from the date of publication, a duplicate will be supplied at the following rate:—

	Without postage.	With Indian postage.
	Rs. A. P.	Rs. A. P.
CALCUTTA SERIES	0 8 9	0 10 3
MADRAS, BOMBAY or ALLAHABAD SERIES	0 5 3	0 5 9

REPRINTS.

THE Complete Series for the years 1876 to 1881, 1883, 1886, 1888, 1890, 1892 to 1895 and 1899 to 1903 has been reprinted, and may be purchased at the Bengal Secretariat Book Depôt, Calcutta, either wholly or in part. All Parts required to complete the stock of the Reports for other years are now being reprinted. Complete Reports from the beginning to date will therefore shortly be available at the Bengal Secretariat Book Depôt.

ADVERTISEMENTS FOR THE CALCUTTA SERIES.

ADVERTISEMENTS of law publications only are received. Rates can be ascertained on application to the Bengal Secretariat Book Depôt.

THE BENGAL LAW REPORTS.

SEVERAL volumes of the Bengal Law Reports, from August 1868 to December 1875, and Full Bench Rulings, Parts I and II, are available at the Bengal Secretariat Book Depôt, Calcutta, at the following rates:—

	Without postage.	With Indian postage.
	Rs. A. P.	Rs. A. P.
BENGAL LAW REPORTS, for one year ...	20 0 0	22 8 0
Single copies, each	2 0 0	2 0 0
FULL BENCH RULINGS Part I and II ..	10 0 0	12 8 0

Pure Sulphate of Quinine and Sulphate of Cinchonidine.

MANUFACTURED AT THE BENGAL GOVERNMENT CINCHONA PLANTATION

FROM 1st April 1905 the price of these articles will be as follows:—

Quinine.

1	Pound tin,	Rs.	16,	or, post	free,	Rs.	16-8.
½	,,	,,	,,	8	,,	,,	,,	,,	8-6.
¼	,,	,,	,,	4	,,	,,	,,	,,	4-6.

Cinchonidine.

1	Pound tin,	Rs.	12,	or, post	free,	Rs.	12-8.
½	,,	,,	,,	6	,,	,,	,,	,,	6-6.
¼	,,	,,	,,	3	,,	,,	,,	,,	3-6.

Analysis shows these articles to be of the purest manufacture; and they are guaranteed to be free from wilful admixture with the inferior alkaloids. They are for sale only to Government officers, and only for cash, and may be had from the Superintendent, Botanic Garden, Sibpur, near Calcutta. Cinchonidine can also be purchased by dealers at the following rates:—

1	Pound tin,	Rs.	16,	or, post	free,	Rs.	16-8.
½	,,	,,	,,	8	,,	,,	,,	,,	8-6.
¼	,,	,,	,,	4	,,	,,	,,	,,	4-4.

Cinchona Febrifuge.

Cinchona Febrifuge can be purchased by all Government officers and by any one taking *five pounds* and upwards at a time from the Superintendent, Botanic Garden, Calcutta, at the following rates—per four-ounce tin, Re. 1 ans. 14; per eight-ounce tin, Rs. 3 ans. 12; per pound tin, Rs. 7 ans. 8; the general public can be supplied by the Superintendent, Botanic Garden, *for cash only*, at the undernoted rates—per four-ounce tin, Rs. 2 ans. 4; per eight-ounce tin, Rs 4 ans. 8; per pound tin, Rs. 9. This medicine is also sold by the principal European and Native druggists in Calcutta. Postage, four annas per four-ounce tin; six annas per eight-ounce tin; and eight annas per pound tin, in addition to the foregoing rates.

THE CALCUTTA GAZETTE.

The 1st March 1901.—From this date the subscription to, and postage for, the *Calcutta Gazette* will be at the following rates, payable in advance:—

PER ANNUM.	For Calcutta.	For the Mufassal including postage.
	Rs. A.	Rs. A.
Entire *Gazette*	15 0	20 0
Parts I, Ia and Ib together ...	5 0	7 8
Part II	1 0	2 12
Parts III, IV and IVa together	4 0	6 0
,, V and VI together ..	2 0	3 0
Appendix (Marine Notifications)	1 0	2 12
Supplement	5 0	7 8
PER ISSUE.		
Entire *Gazette*	0 8	0 10
Supplement	0 4	0 5

N B.—Separate Parts of each issue of the *Gazette*, and occasionally important Rules and Extracts, can be obtained from the Officer in charge, Bengal Secretariat Book Depôt, at the rate of one anna for every sixteen pages or a fraction thereof. Postage according to weight.

RATES FOR ADVERTISEMENTS in the *Calcutta Gazette*:—

Full page, per issue	Rs 20
Half ,, ,, ,, ...	,, 10

Casual advertisements, 4 annas per line per insertion.

Parts I, II, and III of a Descriptive Catalogue of the Sanskrit Manuscripts in the Library of the Calcutta Sanskrit College, prepared by Pandit Hrishikesa Sastri and Babu Siva Chandra Gui, M.A., B.L., of that College, are offered to the public for sale. The Catalog being to be completed in 23 parts, the price of each part as is 12 annas a copy, exclusive of postage. Copies can be obtained from the Principal of the Sanskrit College, Calcutta.

GOVERNMENT PUBLICATIONS FOR SALE

At the Bengal Secretariat Book Depôt, Writers' Buildings, Calcutta, and by the following Agents :—

AGENTS IN INDIA.

Messrs. Thacker, Spink & Co., Calcutta and Simla.
Messrs. Newman & Co., Calcutta.
Messrs Higginbotham & Co., Madras.
Messrs. Thacker & Co., Ld., Bombay.
Messrs. A. J. Combridge & Co., Bombay.
The Superintendent, American Baptist Mission Press, Rangoon.
Mrs. Radhabai Atmaram Sagoon, Bombay.
Messrs. R. Cambray & Co., Calcutta.
Rai Sahib M. Gulab Singh & Sons, Proprietors of the Mufid-i-am Press, Lahore, Punjab.
Messrs. S. K. Lahiri & Co., Printers and Booksellers, College Street, Calcutta.
Messrs. V. Kalyanarama Iyer & Co., Booksellers, &c., Madras.
Messrs. D. B Taraporevala, Sons & Co., Booksellers, Bombay.
Messrs. G. A. Natesan & Co., Madras.
Mr. N. B. Mathur, Superintendent Nazir Kanum Hind Press, Allahabad.
The Calcutta School Book Society.

AGENTS IN ENGLAND.

Mr. B. A. Arnold, 41 and 43 Maddox Street, Bond Street, London, W.
Messrs. Constable & Co., 16 James Street, Hay Market, London, W.
Messrs. Kegan Paul, Trench, Trübner & Co., Charing Cross Road, London.
Mr. B. Alfred Quaritch, 15 Piccadilly, London.
Messrs. P. S. King & Son, 2 & 4 Great Smith Street, Westminster, London.
Messrs. H. S. King & Co., 65 Cornhill, London.
Mr. B. H. Blackwell, 50-51, Broad Street, Oxford.
Messrs. Deighton Bell & Co., Cambridge.

AGENTS ON THE CONTINENT.

Messrs. R. Friedländer & Sohn, Berlin, N. W. Carlstrasse, 11.
Mr. Otto Harrassowitz, Leipzig.
Mr. Karl Hiersemann, Leipzig.
Mr. Ernest Leroux, 28 Rue Bonaparte, Paris.
Mr. Martinus Nijhoff, The Hague.

NOTICE.—Books required for private use can be purchased. Applications should be accompanied by remittance in each case.

All remittances on account of subscriptions to, or prices of, Gazettes, Indian Law Reports or other Government publications available for sale at the Bengal Secretariat Book Depôt, or for cost of advertisements published in the Gazettes should, in future, be made payable to the "Treasurer, Bengal Secretariat, Calcutta." Advices of such remittances, if separately sent, should be addressed to the "Accountant, Bengal Secretariat." All advertisements intended for publication in the *Calcutta* or *Bengali Gazette* should be sent direct to the Superintendent, Government Printing, Bengal.

Books required for the Public Service should be obtained through the Heads of Departments.

☞ *The amounts within parentheses are for packing and postage.*

NEW PUBLICATIONS ISSUED DURING THE CURRENT QUARTER.

APPOINTMENT DEPARTMENT.

Quarterly Civil List for Bengal, corrected up to 1st April 1905. Rs. 3. (4*s.*)

GENERAL DEPARTMENT.

Kurukh Folk-lore in the original collected and transliterated by Revd. Ferd Hahn. F'cap. 4to, cloth. Rs. 2. (3*s.*)
List of officers in the Subordinate Educational Service, Bengal, corrected up to 1st April 1905. F'cap Paper cover. As. 8 (1*s.*).

LEGISLATIVE DEPARTMENT.

The Sunderbans Act 1905 (Ben. Act I of 1905) in English, Bengali or Hindi. 6*p.* (1*s.*)
The Bengal Repealing Act 1905 (Ben. Act II of 1905) in English Bengali or Hindi. 6*p.* (1*s.*)
The Indian Paper Currency Act 1905 (III of 1905) in Bengali. As. 2. (1*s.*)
Ditto ditto in Hindi. As. 2-6. (1*s.*)
The Indian Railway Boards Act 1905, (IV of 1905) in Bengali or Hindi. 6*p.* (1*s.*)
The Bengal Smoke Nuisances Act 1905 (Bengal Act III of 1905) in English. As. 2 (1*s.*).

POLITICAL DEPARTMENT.

Administration Report on the Jails of Bengal for the year 1904. F'cap., boards. Paper cover. Rs. 3 (4*s.*).

PUBLIC WORKS DEPARTMENT.

Classified List and Distribution Return of the Bengal Public Works Department, Establishment, corrected up to 31st March 1905. As. 4. (2*s.*)

REVENUE DEPARTMENT.

A Monograph on Gold and Silver Work in the Bengal Presidency. By D. N. Mookherjee, Assistant Director, Land Records and Agriculture. F'cap. Paper cover. Rs. 1-8. (2*s.*)
Annual Report on the Survey Operations in Bengal during the year 1903-04. F'cap. Paper cover. Re. 1 (2*s.*).
Annual Progress Report on Forest Administration in the Lower Provinces of Bengal for the year 1903-04. F'cap. Paper cover. Re. 1-4 (2*s.*).
Annual Report of the Director of the Department of Land Records and Agriculture, Bengal, on Settlements and Land Records for the year ending 30th September 1904. F'cap. Paper cover. As. 8 (2*s.*).
An account of the Research work in Indigo carried out at Dalsing Sarai Research Station (under subsidy of the Government of Bengal) from 1903 to March 1904, by W. Popplewell Bloxam and H. M. Leake. F'cap., board. Paper cover. Re. 1 (4*s.*).
Report on an inquiry into the state of the Tasar Silk industry in Bengal and the Central Provinces of India. By N. G. Mukerjee. F'cap. Paper cover. Re. 1, (2*s.*)

NEW PUBLICATIONS ISSUED BETWEEN 1ST OCTOBER 1904 AND THE 31ST MARCH 1905.

APPOINTMENT DEPARTMENT

Quarterly Civil List of Bengal, corrected up to 1st January 1905. Rs. 3. (4s.)

FINANCIAL DEPARTMENT.

Report on the Road and Public Works Cess Operations of the Lower Provinces for the official year 1903-04. F'cap. Paper cover. Rs. 2. (2s.)

Report on the Administration of the Excise Department in the Lower Provinces of Bengal for the year 1903-04. F'cap. Paper cover. Re. 2. (2s.)

GENERAL DEPARTMENT.

Report on Inland Emigration during the year ending 30th June 1904. F'cap. Paper cover. As. 8. (1s.)

General Report on Public Instruction in Bengal for 1903-04. F'cap. Paper. Re. 1-5-3. (2s.)

List of Officers in the Subordinate Educational Service, Bengal, corrected up to 1st January 1905. As. 8. (1s.)

Bengal Administration Report, 1903-04. F'cap. Cloth. Rs. 3. (6s.)

JUDICIAL DEPARTMENT.

Annual Report on the Police Administration of the Town of Calcutta and its suburbs for the year 1903. F'cap. Paper cover. Re. 1. (2s.)

LEGISLATIVE DEPARTMENT.

The Chota Nagpur Landlord and Tenant Procedure Act (Bengal Act I of 1879, modified) with notes by H. W. O. Carnduff. Re. 1-8. (2s.)

The Indian Emigration (Amendment) Act 1904 (XII of 1904) in Bengali, Hindi or Uriya. 6p. (1a.)

The Indian Stamp (Amendment) Act 1904 (XV of 1904) in Bengali, Hindi or Uriya. 1a. (1s.)

The Local Authorities Loans Act 1905, (I of 1905) in Bengali, Hindi or Uriya. 6p. (1a.)

The Indian Universities Validation Act 1905 (II of 1905) in Bengali, Hindi or Uriya. 6p. (1a.)

The Stage Carriages Act 1861 (XVI of 1861 as modified up to 1st February 1898, in Hindi. As. 3. (1s.)

The Indian Evidence Act 1872, (I of 1872) as modified up to 1st November 1902, in Hindi. As. 14 (1s.)

The Indian Explosives Act 1884 (IV of 1884) as modified up to 1st December 1903, in Hindi. As. 2. (1s.)

The Bengal Tenancy Act 1885 (VIII of 1885) as modified up to 1st December 1903, in Uriya. Re. 1 (2s.)

The Indian Railway Act 1890, (IX of 1890) as modified up to 1st May 1896 and corrected up to the 1st December 1903, in Hindi. As. 13. (1s.)

MUNICIPAL DEPARTMENT.

List of qualified Medical Practitioners in Bengal, 1904. Royal 8vo. Boards. Paper cover. Re. 1. (2s.)

Resolution reviewing the working of Municipalities in Bengal during the year 1903-04. F'cap. Paper cover. Re. 1. (2s.)

Resolution reviewing the Reports on the working of District Boards in Bengal during the year 1903-04. F'cap. Paper cover. Re. 1. (1s.)

PUBLIC WORKS DEPARTMENT.

Conditions under which Electric Meters and other instruments will be accepted for testing in the Government Electrical Laboratory, Calcutta, and Table of Fees. F'cap. Paper cover. 1s. (1s.)

Revenue Report of the Government of Bengal, Public Works Department, Irrigation Branch, for the year 1903-04. F'cap. Boards. Paper cover. Rs. 2. (3s.)

Classified List and Distribution Return of Establishment of the Public Works Department, Bengal, corrected up to 31st December 1904. Re. 1. (2s.)

Resolution on the Embankment and Drainage Reports of the Government of Bengal, Irrigation Department, for the year 1903-04. F'cap. Boards. Paper cover. Re. 1. (2s.)

REVENUE DEPARTMENT.

Annual Report on the Survey Operations in Bengal during 1903-04 (from October 1903 to September 1904). F'cap. Paper cover. Re. 1. (2s.)

Final Report on the Survey and Settlement Operations in the Saran District, 1893 to 1901, by J. H. Kerr, Esq., Settlement Officer, North Bihar. F'cap. Boards, paper cover. Rs. 4-8. (6s.)

Final Report on the Survey and Settlement Operations in the Darbhanga District, 1896 to 1903, by J. H. Kerr, Esq. F'cap. Boards, paper cover. Rs. 6. (5s.)

Abstract of the Indian Factories Act, 1881, in sheet form, for hanging up in Factories. In English and Hindi and Urdu. As. 4. (1s.) unmounted. Re. 1-4 mounted

Agricultural Statistics of the Lower Provinces of Bengal for 1903-04. F'cap. Paper cover. As. 8. (1s.)

Report on Wards and attached Estates in the Lower Provinces for the year 1903-04. F'cap. Paper cover. Re. 1-8. (2s.)

Report on the Land Revenue Administration of the Lower Provinces for the year 1903-04. F'cap. Paper cover. Rs. 3. (2s.)

STATISTICAL DEPARTMENT.

The Trade of Bengal with Nepal, Thibet, Sikkim and Bhutan for the year ending March 1904. Boards. Paper cover. Re. 1-2. (2s.)

Report on the Trade carried by Rail and River in Bengal in the official year 1903-04. F'cap. Board. Paper cover. Rs. 4. (5s.)

OLDER PUBLICATIONS.

A General Catalogue of all Government Publications (corrected up to 30th June 1904) may be obtained *gratis* on application to the Officer in charge, Bengal Secretariat Book Deptt.

Publications for sale at the office of the Chief Inspector of Explosives with the Government of India.

Rules for the manufacture, possession and sale of explosives issued by each of the Local Governments and Administrations. Price 12a.

Rules for the transport and importation of explosives issued by the Government of India. Price 12a

Rules for the transport and importation of explosives at the Port of Calcutta. Price 4a.

Publications for sale at the Custom House, Calcutta.

Review of the Maritime Trade of Bengal and its Chief Port (Calcutta) for the year 1903-04. Price Re. 1.

Annual Statement of the Sea-borne Trade and Navigation of Bengal, Foreign and Coasting combined in one volume, for the year 1903-04. Price Rs. 6.
Previous years' volumes can be obtained at the same price.

GOVERNMENT PUBLICATIONS FOR SALE

BY THE SUPERINTENDENT OF GOVERNMENT PRINTING, INDIA, 8 HASTINGS STREET, CALCUTTA.

A General Catalogue of all Government Publications may be obtained gratis from the Government Central Press, Calcutta.

All books published by the Superintendent of Government Printing, India, can be purchased, either directly or through the following or any other booksellers:—

AGENTS IN EUROPE.

Mr. E. Arnold, 41 and 43 Maddox Street, Bond Street, W. London.

Messrs. Constable & Co., 16 James Street, Haymarket, W., London.

Messrs. Kegan Paul, Trench, Trubner & Co., Charing Cross Road, London.

Mr. Bernard Quaritch, 15 Piccadilly, London.

Messrs P. S. King and Son, 2 & 4 Great Smith Street, Westminster

Messrs. H. S. King & Co., 65 Cornhill, and 9 Pall Mall, London.

Messrs. Grindlay & Co., 54 Parliament Street, London, S W., Agents for the sale of the Army List.

Mr. Otto Harrassowitz, Mr. Karl Hiersemann } Leipzig.

Messrs. R. Friedlander & Sohn, Berlin, W. N. Carlstrasse, 11

Mr. Ernest Leroux, 28 Rue Bonaparte, Paris.

Mr. Martinus Nijhoff, Hague, Holland.

Mr. B. H. Blackwell, 50 & 51 Broad Street, Oxford.

Messrs. Deighton Bell & Co., Cambridge.

AGENTS IN INDIA.

Messrs. Thacker, Spink & Co., Calcutta and Simla.

Messrs. Newman & Co., Calcutta.

Messrs. R. Cambray & Co., Calcutta.

Messrs. S. K. Lahiri & Co., Calcutta.

Eveyln, Hubert, & Co.,* 149, Dhurmotollah Street, Calcutta.

Messrs. Higginbotham & Co., Madras.

Messrs. V. Kalyanarama Iyer & Co., Madras.

Messrs. G. A. Natesan & Co., Madras.

Messrs. Thacker & Co., Ld., Bombay.

Messrs. A. J. Combridge & Co., Bombay.

Messrs. D. B. Taraporevala, Sons & Co., Bombay

Mrs. Radhabai Atmaram Sagoon, Bombay.

Superintendent, American Baptist Mission Press, Rangoon.

Rai Sahib M. Gulab Singh & Sons, Mufid-i-Am Press, Lahore.

Mr. N. B. Mathur, Suerintendent, Nazair Kanun Hind Press, Allahabad.

Manager, Educational Book Depots, Nagpur and Jubbulpore.*

Manager of the Imperial Book Depot, 63 Chandny Chauk Street, Delhi.*

Manager, "East Coast News," Vizagapatam.*

Manager, "The Agra Medical Hall and Co-operative Association, Limited" (Successors to A. John & Co., Agra).*

Mr. T. K. Seetharama Aiyar, Kumbakonam.*

Lala Debi Prasad, Vakil and Manager of Law Press, Cawnpore.*

Superintendent, Basel Mission Book and Tract Depository, Mangalore.*

Messrs. P. Varadachary & Co., Madras.*

Mr. Sunder Pandurang, Bombay.*

The Mercantile Mission Branch, Calicut.*

H. Dowman, Esq. (late Extra Assistant Superintendent, Survey of India), Allahabad.*

H. Liddell, Esq., Printers, etc., 7, South Road, Allahabad.*

* Agents for sale of the Legislative Department publications.

NOTICE.—Books and Acts required for private use only can be purchased. Applications should be accompanied by a remittance, unless it is wished that the books should be sent by value-payable post, in which case, besides the ordinary postage, an additional charge is made for registration and commission.

Books and Acts required for the public service should be obtained through Local Governments to whom the applicant is subordinate.

Application for Government publications which are no longer in print should be made to the Agents of the particular Government under whose orders they were originally issued.

(The amounts within parentheses are for packing and postage.)

List of New Books published during the Current Quarter

LEGISLATIVE DEPARTMENT.

The Bengal Code, Vol. II. 3rd Edition, 1905. (Now ready). Cloth. Super-Royal 8vo. Rs. 6 or 9s. (10s.)

The Ajmere Code, 3rd Edition, 1905. Cloth. Super-Royal 8vo. Rs. 2-8 or 3s. 9d. (7s.)

Act XIII of 1885, The Indian Telegraph Act, 1885, as modified up to 1st March 1905. 5s. (1s.)

Act III of 1900, The Prisoners Act, as modified up to 1st March 1905. 6s. 6p. (1s.)

HOME DEPARTMENT.

Scientific Memoirs by Officers of the Medical and Sanitary Departments of the Government of India—Oriental or Delhi Sore by Captain S. P. James, M.B., I.M.S., New series, No. 13. Super-Royal 4to Limp cover. 10s. or 1s. (3s.)

Scientific Memoirs by Officers of the Medical and Sanitary Department of the Government of India—On a parasite found in the White Corpuscles of the blood of dogs by Captain S. P. James, M.B., I.M.S. New series No. 14. Super-Royal 4to. Limp cover. 10s. or 1s. (3s.)

Scientific Memoirs by Officers of the Medical and Sanitary Departments of the Government of India—On a parasite found in persons suffering from Enlargement of the Spleen in India (Third Report), by Lt. S. R. Christophers, M.B., I.M.S., New series, No. 15. Super Royal. 4to. Limp cover. 10s. or 1s. (2s.)

Imperial Library List of Additions, Third Series, with subject index, March 1905. No. 7. Super-Royal 4to. Paper cover. 8s. or 9d. (1s.)

The Private Diary of Ananda Ranga Pillai, Vol. I, 1736 to 1746.—Dubash to Joseph Francois Dupleix, Knight of the Order of St. Michael, and Governor of Pondichery.—A record of Matters, Political, Historical, Social, and Personal, from 1736 to 1761. Translated from the Tamil by the order of the Government of Madras and Edited by Sir J. Frederick Price, K.C.S.I., late of the I.C.S., assisted by R. Rangachari, B.A. Rs. 3 or 4s 6d. (7s.)

Quarterly List of Officers in the Department of the Government of India, April to June 1905. Foolscap, paper cover. 4s. or 5d. (1s.)

Annual Report of the National Association for Supplying Female Medical Aid to the Women of India for the year 1904. (20th issue.) Royal 8vo. Limp cover. Re. 1 or 1s. 4d. (4a.)
Fauna of British India, Butterflies. Vol. I, by Colonel C. T. Bingham. Royal 8vo. cloth. Rs. 15 or 25s. 6d. (7a.)

REVENUE AND AGRICULTURE DEPARTMENT.

Progress Report of Forest Administrations in the Andamans for 1903-04. Foolscap. Paper cover. 8a. or 9d. (2a.)

FOREIGN DEPARTMENT.

Report on the Political Administration of the territories within the Central India Agency for 1903-04. (Selection No. CCCCXVI.) Foolscap, board. Re. 1 or 1s. 6d. (2a.)
Report on the working of the Thagi and Dakaiti Department for 1903. (Selection No. CCICCI.) Foolscap, paper cover. 9a. or 11d. (1a.)
Administration Report on the Persian Gulf Political Residency and Maskat Political Agency for 1903-04. (Selection No. CCCCXI.) Foolscap, board. Re. 1 or 1s 6d. (2a.)
Administration Report of the Baluchistan Agency for 1903-04. (Selection No. CCCCXVII. Foolscap. Board. Re. 1-12 or 2s. 8d. (3a.)
Report on the Political Administration of the Rajputana States and Ajmere-Merwara for 1903-1904 (Selection No. CCCCXVIII.) Foolscap, board. Re. 2 or 3s. (6a.)
Report on Sanitation, Dispensaries and Jails in Rajputana for 1903 and on Vaccination for the year 1903-1904. (Selection No. CCCCXIV.) Foolscap, board. Re. 1 or 1s. 6d. (4a.)

FINANCE DEPARTMENT.

Financial Statement for 1904-05 and 1905-06. Foolscap, board. Re. 1-8 or 2s. 3d. (6a.)

COMPTROLLER-GENERAL.

Appropriation Report on the Accounts of the Government of India for 1903-04 by A. F. Cox, Esq. Foolscap. Board. 8a. or 9d. (6a.)

STATISTICAL DEPARTMENT.

Sea-Borne Trade and Navigation Accounts of British India for the month of February 1905. No. 11 of 1904-05. Royal 8vo. Stitched. 8a. or 9d. (2a.)
Accounts of the External Land Trade of British India for the month of December 1904, No. 9 of 1904-05. Royal 8vo., stitched. 8a. or 9d. (2a.)
Statistics of cotton spinning and weaving in the Indian Mills in January 1905 and in the ten months, April 1904 to January 1905, compared with the corresponding period of 1902-03 and 1903-04. Royal 8vo., stitched. 2a. or 2d (1a.)
Statistics of Cotton Spinning and Weaving in the Indian Mills in February 1905 and in the 11 months, April 1904 to February 1905, compared with the corresponding period of 1902-03 and 1903-04. Royal 8vo. Stitched. 2a. or 2d. (1a.)
Accounts relating to the Trade carried by rail and river in India in the quarter and in six months ending September 1904, compared with the corresponding periods of the years 1902 and 1903. No. 2 of 1904-05. Foolscap., paper cover. 8a. or 9d. (3a.)
Sea-Borne Trade and Navigation Accounts of British India for the month of March 1905. No. 12. Royal 8vo. Stitched. 8a. or 9d. (2a.)
Accounts relating to the Sea-borne Trade and Navigation of British India for the calendar year 1904, compared with the years 1902 and 1903. 8a. or 9d. (1a.)

MILITARY DEPARTMENT.

The Quarterly Indian Army List for April 1905, New series, No. 4. Royal 8vo., paper cover Rs. 3 or 4s. 6d. (8a.)
India Military Budget Estimate for the year 1905-1906. Foolscap, board. Re. 1-8, or 2s. 3d. (8a.)

RAILWAY BOARD.

Report (dated 30th December 1903) on the Organisation and Working of Railways in America by Neville Priestley, Esq. Foolscap. Paper cover. Rs. 3 or 4s. 6d. (3a.)

List of Books published from October 1904 to March 1905.

LEGISLATIVE DEPARTMENT.

The Indian Registration Act, 1877 (III of 1877), as modified up to 1st April, 1900, with footnotes brought down to 1st November, 1902. 11a. (2a.)
The Indian Emigration Act, 1883 (XXI of 1883), as modified up to 1st December, 1902. 11a.
Act XXX of 1852. An Act for the Naturalization of Aliens, as modified up to 1st December, 1902. 2a. (1a.)
Act V of 1861. The Police Act, 1861. As modified up to 7th March, 1903. 7a. 6p. (1a.)
Act X of 1873. The Indian Oaths Act. As modified up to 1st February, 1903. 3a. 9p. (1a.)
Act XIX of 1883. The Land Improvement Loans Act, 1883. As modified up to 1st February, 1903. 2a. 6p. (1a.)
Act XII of 1884. The Agriculturists' Loans Act, 1884. As modified up to the 15th December, 1896, and with footnotes brought down to the 1st February, 1903. 2a. (1a.)
Act IX of 1890. The Indian Railways Act, 1890. As modified up to 1st May, 1896, with footnotes brought down to 1st January, 1903. 15a. (3a.)
Act XXXIV of 1850. The State Prisoners Act, 1850. As modified up to 30th April, 1903. 2a. 6p. (1a.)
Act XXXIV of 1858. The Lunacy (Supreme Courts) Act, 1858. As modified up to 30th April, 1903. 4a. 3p. (1a.)
Act XXXV of 1858. The Lunacy (District Courts) Act, 1858. As modified up to 30th April, 1903. 2a. 3p. (1a.)
Act V of 1873. The Government Savings Banks Act, 1873. As modified up to 1st April, 1903. 3a. 6p. (1a.)
Act II of 1886. The Indian Income Tax Act 1886. As modified up to 1st April, 1903. 8a. (1a. 6p.)
Act I of 1878. The Opium Act, 1878. As modified up to 1st December, 1896, with footnotes brought down to 1st March, 1902. 5a. 6p. (1a.)
Act III of 1865. The Carriers Act, 1865. As modified up to 31st May, 1903. 3a. (1a.)
Act IX of 1897. Amending the law relating to Government and other Provident Funds. As modified up to 1st May, 1896, with footnotes brought down to 1st January, 1903. 1a. 6p. (1a.)
Act No. XII of 1855 (Legal Representatives' Suits), as modified up to 1st November, 1904. 1a 6p. (1a.)
Act No. IX of 1860 [Employers and Workmen (Disputes)], as modified up to 1st December, 1904. 1a. 6p. (1a.)
Act No XXI of 1860 (Societies Registration), as modified up to 1st December, 1904. 2a. 9p. (1a.)
The Punjab Laws Act, 1872 (IV of 1872), as modified up to 1st November, 1904. 7a. 1s (1a.)
The Indian Christian Marriage Act, 1872 (XV of 1872), as modified up to 1st December, 1904. 10a. (1a.)
Act No. X of 1891 (Indian Penal Code Amendment), as modified up to 1st December 1904 1a. (1a.)
The Indian Petroleum Act, 1899 (VIII of 1899), as modified up to the 1st December 1904. 7a. (1a.)
The Indian Extradition Act, 1903 (XV of 1903), as modified up to 1st December, 1904. 5a. 6p. (1a.)

Act V of 1869. The Indian Articles of War, as modified up to 1st December 1904. Royal 8vo. Stitched. Re. 1 2s. (3s.)

Act XV of 1881. The Indian Factories Act, 1881, as modified up to the 1st December 1904. Royal 8vo. Stitched. 5a 6p. (1s 6p.)

Act V of 1883. The Indian Merchant Shipping Act, 1883, as modified up to the 1st December, 1904. Royal 8vo. Stitched. 6a (1s.)

The Central Provinces Code, 3rd Edition, 1905. Cloth. Super-Royal 8vo. Re. 4 or 6s. (8s.)

The Bengal Code, Volume I, 3rd Edition, 1905 (Now ready). Cloth. Super-Royal. Price all 5 Volumes Rs. 30 or 45s. Vol. I. Rs. 6 or 9s. (8s.)

The Public Gambling Act, 1867 (III of 1867), as modified up to the 1st January, 1905. As. 4 or 5d. (1s.)

The Indian Contract Act, 1872 (Act IX of 1872), as modified up to the 30th June, 1901. Royal 8vo. Stitched. Re. 1-4a. (2s.)

HOME DEPARTMENT.

Scientific Memoirs by Officers of the Medical and Sanitary Departments of the Government of India. On a parasite found in persons suffering from enlargement of the spleen in India, by Lieut. S. R. Christophers, M.B., I.M.S, New series, No. 11. Super-Royal 4to. Limp cover. Rs. 2 or 3s. (3s.)

Report on the Administration of Criminal Justice in Lower Provinces of Bengal during the year 1903. Foolscap. Paper cover Re. 1. or 1s. 6d. (2s.)

Imperial Library List of Additions, September to December 1904, Nos. 1–6. Foolscap. Paper cover. As. 8 or 9d. (2s.) each.

Report on the Administration of Civil Justice in the Lower Provinces of Bengal during the year 1903. Foolscap. Paper cover. Re. 1 or 1s. 6d. (3s.)

Scientific Memoirs by Officers of the Medical and Sanitary Departments of the Government of India on the Morphology, Teratology and Declinism of the Flowers of Cannabis By Major D. Prain, M.B., I.M.S. New series. No. 12. Super-Royal 4to. Limp cover. 14s. 1s, 4d. (3s.)

Quarterly List of Officers in the Departments of the Government of India, October to December 1904, January to March 1905. Foolscap, Paper cover As. 4 or 5d. (1s.)

Annual Report of the Sanitary Commissioner with the Government of India, 1903, with Appendices and Returns of sickness and Mortality among European Troops, Native Troops and Prisoners in India for the year. Foolscap. Board. Rs. 3 or 4s. 6d. (8s.)

Report of the Indian Police Commission, 1902-03. Foolscap. Board. With appendices Re. 1-8s. (7s.); without appendices, Re. 1 (6s.)

DEPARTMENT OF REVENUE AND AGRICULTURE.

Report of the Chief Inspector of Mines in India for the year ending 31st December 1903. Foolscap. Board. As. 12 or 1s. 2d. (2s.)

Review of Forest Administration in British India for the year 1902-03. Foolscap. Paper cover. Re. 1-11 or 2s. 6d. (3s.)

Annual Administration Report of the Civil Veterinary Department in India for the official year 1903-04. Foolscap. Paper cover. 12a. or 1s. (2s.)

Records of the Botanical Survey of India, Vol. IV, No. I (An Epitome of the British Indian Species of impatients by Sir J. D. Hooker, G.C.S.I., C.B., F.R.S. Part I. Royal 8vo. Paper cover. 3a or 4d. (1s.)

Records of the Botanical Survey of India, Vol III, No. 2. The vegetation of the districts of Hughli, Howrah and the 24-Parganas, by D. Prain, Esq. Re. 1-12, or 2s. 8d. (3s.)

Rules framed under section 20 of the Indian Mines Act, 1901 (VIII of 1901) prescribing the Compulsory submission of Annual returns of output and labour of Indian Mines. Foolscap. 0-0-6. (1s.)

Rules for the Lease or Sale of Waste Lands in India. 1904 edition, Foolscap. Board. Rs. 4 or 6s. (8s.)

Archæological Survey of India. Annual Report, 1902-03. Super-Royal. Cloth. Rs. 20 or £1 10s. (Re. 1 2s.)

Annual Report of the Board of Scientific Advice for India for the year 1903-04. Foolscap. Paper cover. 6a. or 7d. (2s.)

List of Officers in the Department of Revenue and Agriculture, Government of India, and the Departments subordinate to it, corrected to 1st January 1905. As. 8 or 8d. (2s.)

FOREIGN DEPARTMENT.

Report on the Political Administration of the Territories within the Central India Agency for 1902-03. Foolscap Board. Re. 1 or 1s 6d. (3s.)

Report on the Administration of the Civil and Military Station of Bangalore for the year 1902-03. 8a. or 9d. (2s.)

Report on the Administration of Berar for the year 1902-03. Foolscap. Board. Rs. 2 or 3s. (2s.)

Report on the Administration of the Civil and Military Station of Bangalore for the year 1903-04. Foolscap. Limp cover. 8a. or 9d. (2s.)

FINANCE DEPARTMENT.

Report on the Administration of the Mint at Bombay and Calcutta for the year 1903-04. Foolscap. Paper cover. Re. 1 or 1s. 6d. (2s.)

Statistics Compiled from the Finance and Revenue Accounts of the Government of India. Receipts and Disbursemets of Home and Indian Accounts from 1st April 1895 to 31st March 1903. Foolscap. Board. Rs. 2 or 3s. (9s.)

List of Officers in the Finance and Commerce Department, corrected to 31st October, December 1904, January and February 1905. Royal 8vo. Paper cover. 4a, or 5d. (1s.)

COMPTROLLER-GENERAL.

Finance and Revenue Accounts of the Government of India for the year 1903-04. Foolscap. Board. Rs. 2. or 3s. (8s.)

STATISTICAL DEPARTMENT.

Statistics of Cotton Spinning and Weaving in the Indian Mills in June 1904 and in the three months, April to June 1904, compared with the corresponding period of 1902 and 1903, No. 5 of 1904-05. Royal 8vo. Stitched. 2a, or 2d. (1s.) each.

Trade and Navigation Accounts of British India for the months of August, September and October 1904. Nos. 5, 6 and 7 of 1904-05. Royal 8vo. Stitched. 8a. or 9d. (2s.) each.

Accounts of the External Land Trade of British India for the months of June, July and August 1904, Nos. 3, 4 and 5 of 1904-05. Royal 8vo. Stitched. 8a. or 9d. (2s.) each.

Statistics of Cotton Spinning and Weaving in the Indian Mills in July, August, September, October, November, December 1904. Royal 8vo. Stitched. 2a. or 2d. (1s.) each.

Judicial and Administrative Statistics of British India for 1902-03 and preceding years. 8th issue. Foolscap. Board. Rs. 2 or 3s. (10s.)

Accounts of the French Possessions in India in the year ending 31st March 1904 and the four preceding years. Foolscap. Paper cover. 2a. or 2d. (1s.)

Accounts of the Trade of Aden in the year ending 31st March 1904 and the four preceding years. Foolscap. Paper cover. 10a. (1s.)

Area and yield of certain principal crops in India. Sixth issue. Foolscap. Paper cover. 3a. or 6d. (2s.)

Sea-Borne Trade and Navigation Accounts of British India for the months of November, December 1904. January 1905. Nos. 8, 9 and 10 of 1904-05. Royal 8vo. Stitched. 8a. or 9d. (2s.)

Accounts of the External Land Trade of British India for the month of September, October 1904. Nos. 6, 7 and 8 of 1904-05. Royal 8vo, Stitched. 8a. or 9d. (2s.)

Agricultural Statistics of India for the years 1898-99 to 1902-03 in two Volumes. Foolscap. Board. Both Volumes. Rs. 3-8*a*. or 5*s*. 3*d*. (12*a*.)

Accounts relating to the trade carried by Rail and River in India in the quarter ending June 1904, compared with the corresponding period of the years 1902 and 1903. No. 1 of 1904-05. Foolscap. Paper cover. 8*a*. or 9*d*. (8*a*.)

Financial and Commercial Statistics of British India, II issue, 1904. Super-Royal, Paper cover. Rs. 4 or 6*s*. (12*a*.)

Tariff Shcedules, 1905. Royal 8vo. Stitched. 6*a*. or 7*d*. (1*s*.)

Annual Statement of the Coasting Trade and Navigation of British India in the year ending 31st March 1904. Super-Royal. Board. Rs. 2 or 3*s*. (7*a*.)

ACCOUNTANT-GENERAL.

History of Services of Gazetted and other Officers serving under the Government of Bengal, corrected to 1st July 1904. In two parts. Royal 8vo. Board. Rs. 5 or 7*s*. 6*d*. (12*a*.)

MILITARY DEPARTMENT.

Return of Wreck and Casualties in Indian Waters, 1902-03. Foolscap. Board. Re. 1 or 1*s*. 6*d*. (3*a*).

Class Hand Books for the Indian Army—Mappillas or Moplahs, by Major P. Holland Pryor. Royal 8vo. Board. Re. 1-4 or 1*s*. 11*d*. (5*a*.)

Hand Book for the Indian Army—Jats, Gujars, and Ahirs, by Major A. H. Bingley. Royal 8vo. Board. Re. 1 or 1*s*. 6*d*. (5*a*.)

Classified List and Distribution Return of the Establishment of the Military Works Services corrected up to 31st December 1904. Royal 8vo. Paper cover. 4*a*. or 5*d*. (1*a*.)

RAILWAY BOARD.

Administration Report of the Telegraph Department for 1903-04. Foolscap. Paper cover. 8*a*. or 9*d*. (2*a*.)

Public Works Department Classified List of the Subordinate Establishment, corrected to 30th June 1904. Royal 8vo. Paper cover. 4*a*. or 5*d*. (1*a*.)

Public Works Department Classified List and Distribution of Establishment corrected up to 31st December 1904. Super-Royal 8vo. Paper cover. Rs. 2 or 3*s*. (4*a*.)

Selections from the Records of the Government of India in the Public Works Department, No. CCXXXVIII.—Relative Merits of Broad and Metre Gauge Lines of Railway. Foolscap. Board. 4*a*. or 5*d*. (1*s*. 6*p*.)

Classified List of the Subordinate Establishment corrected up to 31st December 1904. Royal 8vo. Paper. 4*a*. or 5*d*. (1*a*.)

List of new books for sale at Thomason College, Roorkee which were not advertised before.

Roorkee Treatise on "Railways," 4th Edition, revised by F. Wolly Dod, F.C.H. Price, Rs. 3 per copy.

Roorkee Treatise on "Irrigation Work." By Lieutenant-Colonel J. Clibborn, I.S.C., B.A., L.C.E., C.I.E. Price, Rs. 9 per copy.

Roorkee Treatise on "Sanitary Engineering." Compiled by Lieutenant-Colonel J. Clibborn, I.S.C., B.A., L.C.E., C.I.E. Price, Rs. 4-8 per copy.

Roorkee Manual of "Applied Mechanics," Volume II. The stability of structures mostly by graphic methods, by Lieutenant-Colonel J. H. C. Harrison, R.E. Price, Rs. 8-2 per copy.

Roorkee Manual of Hydraulics. Price per copy, Re. 1-4. (No. XIX, Elementary Treatise.) By E. F. Tipple, Esq., B.A.

Designs for Wooden Bridges, together with rules for calculating the area of waterway, etc., and Plates. By late Rai Bahadur Kunhya Lal. Price per set, Rs. 4-2

Pamphlet on Examination for Acid Radicals: Tables giving Analysis of Acids. Price per copy, 8*a*.

Pamphlet on Examination for Acid Bases: Tables giving Analysis of Metallic Bases. Price, 8*a*. per copy.

List of New Books available for sale in the College Book Depot.

Roorkee Treatise on Civil Engineering, Section XIII. Drawing for Engineer students, Part I. By Major E. H. deV. Atkinson, R.E., Principal, Thomason College, Roorkee. Price per copy Rs. 3-2, including packing, postage, etc.

Hand Book of the Thomason Engineering College, Roorkee, Illustrated. Price Rs. 6-12 per copy, including packing, postage, etc.

A list of new books and periodicals for sale at the Library of the Asiatic Society of Bengal, 57 Park Street, Calcutta.

SOCIETY'S PUBLICATIONS.

Proceedings Nos. 9 and 10, at 8*a*.

BIBLIOTHECA INDICA.

Chaturvarga Chintamani. Vol. IV, Fasc. 3, at 6*a*.
Catasahasrika Prajnaparamita. Vol. II, Fasc. 9, at 6*a*.
Mahabhasyaprodipoddyota. Vol. III, Fasc. 1, at 6*a*.
Suddhi Kaumudi. Fasc. 3, at 6*a*.
Vidhana Parijata. Vol. I, Fasc. 7, at 6*a*.

List of books published by the Meteorological Department from 1st October 1904 to 31st March 1905.

Monthly Weather Review, April to September 1904. (Illustrated by 6 plates.) Quarto. Paper cover. Re. 1 per month.
Indian Meteorological Memoirs, Vol. XVI. Part II. By Sir John Eliot Quarto Paper cover. Rs 3.

List of Books published by the Meteorological Department during the current quarter.

Monthly Weather Review, October 1904. (Illustrated by 6 plates.) Quarto. Paper cover. Re. 1.
Indian Meteorological Memoirs, Vol. XVI, Part II. By Sir John Eliot Quarto. Paper cover. Rs. 3.
Annual Summary of the Monthly Weather Review, 1903. (Illustrated by 6 plates.) Quarto. Paper cover. Rs. 3.

List of new books published by the Geological Survey of India during the week ending 22nd April 1905.

Records of the Geological Survey of India, Vol. XXXII, Part II. Re. 1.
Memoirs of the Geological Survey of India Palæontologia Indica. New Series. Vol. II, Memoir No. 2. Re. 1.

APPENDIX TO

The Calcutta Gazette.

WEDNESDAY, JUNE 7, 1905.

NOTICES TO MARINERS.

THE following Notices are published for general information.

W. A. INGLIS,

CALCUTTA, *the 1st June 1905.* *Secretary, Marine Department.*

EASTERN ARCHIPELAGO—JAVA, NORTH COAST.

Korowelang—Rock buoy to be replaced by light buoy.

No. 176 (first publication).—The British Admiralty has given notice (No. 342 of 1905) that the red conical buoy surmounted by a ball, marking Korowelang rock, will be replaced by a light buoy exhibiting a *white occulting* light *every twenty seconds*, thus:—light, *ten seconds*; eclipse, *ten seconds*.

Approximate position, lat 6° 48′ S., long. 110° 10′ E.

Further notice will be given when this alteration has been made.

This Notice affects the following Admiralty Chart:—Java, No. 1653: Also, Eastern Archipelago, Part II, 1904, page 106.

PACIFIC OCEAN—NEW GUINEA, SOUTH COAST—ARU ISLANDS—DOBBO HARBOUR.

Tanjong Ular—Intended light.

No. 177 (first publication).—The British Admiralty has given notice (No. 343 of 1905), that it is intended to establish a *white group occulting* light showing groups of three eclipses *every thirty seconds*, thus:—light, *fifteen seconds*; eclipse, *three seconds*; light, *three seconds*; eclipse, *three seconds*; light, *three seconds*; eclipse, *three seconds* on Tanjong Ular, the north-western end of Wammer island, at the entrance to Dobbo harbour: the light, which will be of the 4th order, will be elevated 72 feet above high water, visible in clear weather from a distance of 14 miles and shown from an open ironwork support 42 feet high painted white.

Approximate position on plan on Chart No. 1460, lat. 5° 45′ S., long. 134° 11′ E.

Further notice will be given when this light has been established.

This Notice affects the following Admiralty Charts:—Eastern Archipelago, No. 942b: Australia, No. 2759a; Aru islands, No. 470; Dobbo harbour on No. 1460: Also, List of Lights, Part VI, 1905, page 87; and Eastern Archipelago, Part I, 1903, page 478.

EASTERN ARCHIPELAGO—SUMATRA, WEST COAST—SAMBAT BAY.

Tanjong Bandar (Bundar)—Intended light.

No. 178 (first publication).—The British Admiralty has given notice (No. 344 of 1905) that it is intended to establish a *white group occulting* light showing groups of three occultations *every thirty seconds*, thus:—light, *fifteen seconds;* eclipse, *three seconds;* light, *three seconds;* eclipse, *three seconds;* light, *three seconds;* eclipse, *three seconds*, on Tanjong Bandar, Sambat bay: the light, which will be of the 4th order, will be elevated 49 feet above high water, visible in clear weather from a distance of 12 miles and shown from an open ironwork frame support, 42 feet high and painted white.

Approximate position, lat. 4° 49′ S., long. 103° 20′ E.

Further notice will be given when this light has been established.

This Notice affects the following Admiralty Charts:—Eastern Archipelago, No. 941a; China Sea, No. 1263; Tyingkok islands to Sunda strait, No. 2761; plan of Sambat bay on Chart No. 866: Also, List of Lights, Part VI, 1905, page 75; and China Sea Directory, Vol. I, 1896, page 314.

EASTERN ARCHIPELAGO—SUMATRA, WEST COAST.

Melabu, Tanjong Karang—Intended light.

No. 179 (first publication).—The British Admiralty has given notice (No. 345 of 1905) that it is intended to establish *a white group occulting* light showing groups of three occultations *every thirty seconds*, thus:—light, *fifteen seconds;* eclipse, *three seconds;* light, *three seconds;* eclipse, *three seconds;* light, *three seconds;* eclipse, *three seconds*, on Tanjong Karang, Melabu: the light, which will be of the 4th order, will be elevated 49 feet above high water, visible in clear weather from a distance of 12 miles, and shown from an open ironwork frame support, 42 feet high and painted white.

Approximate position, lat. 4° 7½′ N., long. 96° 7′ E.

Further notice will be given when this light has been established.

This Notice affects the following Admiralty Charts:—Eastern Archipelago, No 941a; China Sea, No. 1263; Acheh head to Tyingkok bay, with plan, No. 2760: Also, List of Lights, Part VI, 1905, page 75; and China Sea Directory, Vol. I, 1896, page 266.

BAY OF BENGAL—STRAITS SETTLEMENT AND MALAY PENINSULA.

Singapore—Standard Time—Time-balls altered.

No. 180 (first publication).—The British Admiralty has given notice (No. 346 of 1905) that on and after 1st June 1905 Standard time of the 105th meridian of East longitude will be adopted in the Straits Settlement and the Federated States in the Malay peninsula.

The time-balls at Fort Canning and Pulo Brani will consequently be dropped at 1ʰ 0ᵐ 0ˢ P.M. Standard time of the 105th meridian, or 0ʰ 55ᵐ 25·1ˢ P.M. Singapore Observatory time, corresponding to 18ʰ 0ᵐ 0 Greenwich mean time.

Approximate position, lat. 1° 17′ N., long. 103° 51′ E.

This Notice affects the following Admiralty Charts:—Singapore road, No. 1995; Keppel harbour, No. 2023: Also, List of Time Signals, 1904, Nos. 35 and 36; and China Sea Directory, Vol. I, 1896, page 221.

BAY OF BENGAL—ANDAMAN ISLANDS.

Port Blair—Leading lights established.

No. 181 (first publication).—The British Admiralty has given notice (No. 347 of 1905) that the undermentioned *white fixed* leading lights were established in port Blair:—

(*a*) ATLANTA POINT.—A front light, elevated 70 feet above high water, has been erected on this point in a position from which the Port office jetty on Ross island bears N. 81° E. distance 8$\frac{3}{10}$ cables, and the eastern extremity of Perseverance point N. 4° W.

The rear light is elevated 144 feet above high water, and is situated at a distance of 1¼ cables S. 35° W. from the front light. The light power of the lights is about 70 candles. These lights in line S. 35° W. lead into the harbour.

(*b*) SOUTH POINT.—A front light, elevated 7 feet above high water, has been established on the end of the pier at this point, situated 7 cables S. 22° W. from the Port office jetty. The rear light is elevated 40 feet above high water, and situated at a distance of one cable S. 11° E. from the front light. The light power of the lights is about 35 candles. These two lights in line S. 11° E. lead from the line of the Atlanta point lights to the anchorage off Ross island.

All the above lights are exhibited from towers about 7 feet high and painted white.

Approximate position of Port office jetty, lat. 11° 40½′ N., long. 92° 46¼′ E.

(*Variation Nil in 1905.*)

This Notice affects the following Admiralty Chart:—Port Blair, No. 514: Also, List of Lights, Part VI, 1905, page 61; and Bay of Bengal Pilot, 1901, page 311.

EASTERN ARCHIPELAGO—SUMATRA, NORTH-EAST COAST.

Bedagei—Lights discontinued.

No. 182 (first publication).—The British Admiralty has given notice (No. 360 of 1905) that the two white fixed vertical lights formerly exhibited on the south side of the Bedagei river entrance have been permanently discontinued.

Approximate position, lat. 3° 30½′ N., long. 99° 13½′ E.

This Notice affects the following Admiralty Charts:—Malacca strait, No. 1355; and Diamond point to Pulo Berhala, No. 1353; Also, List of Lights, Part VI, 1905, No. 401; and China Sea Directory, Vol. I., 1896, page 86.

EASTERN ARCHIPELAGO—BORNEO, EAST COAST.

Balik Papan bay—No. 4 buoy to be replaced by light buoy.

No. 183 (first publication).—The British Admiralty has given notice (No. 364 of 1905) that the white conical buoy No. 4, on the eastern side of the entrance to the anchorage in Balik Papan bay, situated at distances of 7 cables S. 18° E. from Tokong, will be replaced by a light-buoy, painted white, exhibiting a *white occulting light every twenty seconds*, thus:—light, *ten seconds*; eclipse, *ten seconds*.

Approximate position of Tokong, lat. 1° 16′ S., long. 116° 48′ E.

(*Variation 2° Easterly in 1905.*)

This Notice affects the following Admiralty Chart:—Plan of Balik Papan bay on Chart No 3031; Also, Eastern Archipelago, Part II, 1904, page 291.

PACIFIC OCEAN, SOUTH—SOLOMON ISLANDS—PAVUVU GROUP.

Victoria shoal—Existence of.

No. 184 (first publication).—The British Admiralty has given notice (No. 366 of 1905) of the existence of a shoal, on which a depth of 9 fathoms was obtained, to the southward of Pavuvu group, in a position from which the extremity of cape Marsh bore N. 14° W., distant 5$\frac{1}{10}$ miles, and the southern extremity of Allacon island N. 70° E.

This danger, which has been named Victoria shoal, is about a cable in extent, and appeared to have much less water than that given above on its southern edge.

Approximate position, lat. 9° 10′ S., long. 158° 59′ E.

(*Variation 8° Easterly in 1905.*)

This Notice affects the following Admiralty Chart.—Plan of Pavuvu islands on Chart No. 2355: Also, Pacific Islands, Vol. I., 1900, page 304.

CHINA SEA—Formosa (Taiwan).

Kelung harbour, closed—Pescadores islands—State of siege proclaimed.

No. 185 (first publication).—The British Admiralty has given notice (No. 367 of 1905) that Kelung harbour, Formosa, which had recently been closed to foreign shipping during the daytime, can now be entered, provided notice is given beforehand to the Naval Mine Department.

Approximate position, lat. 25° 8′ N., long. 121° 45′ E.

Also, that the Japanese Government have published an Ordinance declaring that from 13th April 1905 the port of Makyu (Makung) in the Pescadores islands and the neighbouring seas would be in a state of siege.

Approximate position of Makung, lat. 23° 31′ N., long. 119° 34′ E.

This Notice affects the following Admiralty Charts:—Kelung harbour, No. 2618; Pescadores islands, Nos. 1961 and 1338; Also, China Sea Directory, Vol. III, 1904, pages 259 213.

BAY OF BENGAL—Burma coast.

Akyab harbour—Certain buoys adrift.

No. 186 (first publication).—Telegraphic communications have been received from the Port Officer, Akyab, stating that the Lower Spit buoy as well as Saunder's shoal buoy have sunk. They will be replaced as soon as possible.

INDIA, WEST—Bombay coast.

Alibag and Bhatkal—Buoys removed for the S.-W. Monsoon.

No. 187 (first publication).—The Bombay Government has given notice (No. 49 of 1905) that the buoys on the west coast from Alibag to Bhatkal will be removed for the south-west Monsoon after 15th May 1905.

The dates of the removal of the buoys will be notified hereafter.

INDIA, WEST—Bombay coast.

Alleppey—Red and Black buoys removed.

No. 188 (first publication).—The Master Attendant at Alleppey has given notice dated the 20th May 1905 that the Red and Black buoys marking the anchorage at Alleppey have been removed and will probably be replaced about the 15th September 1905.

AUSTRALIA, SOUTH—Gulf St. Vincent.

Port Adelaide river—Two Warping Beacons placed.

No. 171 (second publication).—The President of the Marine Board, Port Adelaide, has given notice (No. 9 of 1905) that two Warping Beacons have been placed on the south side of the Jervois Bridge on the west bank of the river—one opposite the entrance to the Canal and the other near the Oyster Beds.

These Beacons are not for vessels to moor to, but for warping purposes only.

This affects Admiralty Chart No. 1750.

AUSTRALIA, SOUTH—Great Australian Bight.

Fowler's bay—An ordinary Jetty light exhibited.

No. 172 (second publication).—The President of the Marine Board, Port Adelaide, has given nctice (No. 11 of 1905) that on and after April 22nd, 1905, an ordinary Jetty light will be exhibited from the end of Fowler's Bay Jetty.

This affects Admiralty Chart No. 1061.

AUSTRALIA.—Queensland.

Port Douglas—Directions to enter the New Channel.

No. 173 (second publication).—With reference to Notice to Mariners No. 93, dated 24th March 1905, issued by this office, the Port Master, Brisbane, has given further notice (No. 3 of 1905) that the directions to enter the New Channel into Port Douglas state that the marks and lights bear in line N. E. by N. ½ N. and N. ½ E., respectively. These bearings from seaward should read S.W. by S. ½ S. and S. ½ W., respectively

Australia Directory, vol. 2; Admiralty Chart No. 2924 (old).

INDIA, WEST—Malabar coast.

Talayi—Small spherical buoy removed for overhaul.

No. 174 (second publication).—The Presidency Port Officer, Madras, has given notice (No. 19 of 1905) that the small spherical buoy marking the pinnacle rock off the Sub-Port of Talayi will be removed on the 25th May 1905 for overhaul, and will be replaced about the 1st October 1905, when the working season again commences.

BAY OF BENGAL—Chittagong coast.

Kurnafuli river—Depth of water in the channels.

No. 175 (second publication).—The Port Officer, Chittagong, has given notice that the following depth of water was found in the river channels by soundings taken on the 24th May and reduced to zero :—

	Ft.	in.
Track No. 1—Outer bar—		
Disc on diamond	14	0
Track No. 2—Inner bar—		
Disc on diamond	11	6
Batten beacon on pillar	12	0
Track No. 3—		
Triangle on cross and ball	16	6
Track No. 4—Guptakhally crossing—		
Tripod on diamond	18	0
New mark—		
Cross and ball on with diamond passing close to Gupta point ...	21	6

N.B.—There is no doubt that Gupta point is being washed away and that the shoal on the opposite bank is extending.

KOREA, WEST COAST—Ping Yang inlet.

Chogon dogu—Extension of shoal.

No. 162 (third publication).—The British Admiralty has given notice (No. 325 of 1905), that the Master of the S.S. *Tatsu Maru* reports that the 2-fathom shoal to the south-westward of Chogon dogu, above Chel tau anchorage, Ping yang inlet, and shown on the Chart at a distance of $1\frac{4}{10}$ miles N. 27° E. from Gai gan misaki, has extended in a S. 22° E. direction for about 4 cables, the depths over the extension being from 1½ to 2 fathoms.

Approximate position on Chart 1656, lat. 38° 40′ N., long 125° 36′ E.

(Variation 4° Westerly in 1905.)

This Notice affects the following Admiralty Charts :—Approaches to Ping Yang inlet, No. 1257; Ping Yang inlet, No. 1656: Also, Sailing Directions for Korea, &c., 1904, page 43.

PACIFIC OCEAN—The Philippine islands—Leite, Samar Luzon.

Janabatas channel—Higunum island and Port Sisiran—Rocks reported.

No. 163 (third publication).—The British Admiralty has given notice (No. 327 of 1905) that the undermentioned rocks are reported to exist in the following positions in the vicinity of the Philippine islands :—

1. Leite island, north coast, Janabatas channel. A rock, with a depth of 6 feet over it, is reported in a position from which the eastern extremity of Navahay island bears S. 29° W., distant 5 cables, and the northern extremity of the same island S. 89 W.

Approximate position, lat. 11° 26½′ N., long. 124° 54½′ E.

2. Samar island, east coast. A sand cay, with submerged reefs and heavy breakers, extending for a considerable distance from its north-west and south-east sides, is reported to be situated about 5 miles S. 65° E. from Higunum island.

Approximate position, lat. 12° 21′ N., long. 125° 31′ E.

The coast in this locality is said to be inaccurately shown on the Charts.

3. Luzon, east coast. A rock, on which the sea breaks heavily, is reported in mid-channel between Laja island and Tinajuagan point at the entrance to port Sisiran.

Approximate position, lat. 14° 0′ N., long. 123° 41′ E.

(Variation Nil in 1905.)

This Notice affects the following Admiralty Charts:—The Philippine islands, No. 943; St. Bernardino and Mindoro straits, No. 2577; San Pedro bay to Libukan islands, No. 2987: Also, Eastern Archipelago, part I, 1903, pages 361, 385, 377.

NEW ZEALAND—South island, east coast.

Weld's anchorage—Beacons removed.

No. 164 (third publication).—The British Admiralty has given notice (No. 332 of 1905) that the two beacons leading to Weld's anchorage, and situated on the southern side of Flaxbourne river, have been removed and will not be re-erected; they have consequently been expunged from the Chart.

Approximate position, lat. 41° 50′ S., long. 174° 12′ E.

This Notice affects the following Admiralty Chart:—Plan of Flaxbourne on Chart No. 2178: Also, New Zealand Pilot, 1901, page 267.

EASTERN ARCHIPELAGO—Sumatra, north-east coast.

Strait of Durian—Wreck in southern approach.

No. 165 (third publication).—The British Admiralty has given notice (No. 337 of 1905) of the existence of a wreck, with two masts above water, in the southern approach to the Strait of Durian, situated at a distance of $2\frac{1}{10}$ miles S. 77° W. from the north point of South Brother island.

Approximate position, lat. 0° 32¾′ N., long. 103° 43¼′ E.

(Variation 1° Easterly in 1905.)

This Notice affects the following Admiralty Chart:—Banka strait to Singapore, No. 2757; strait of Durian, No. 2402: Also, China Sea Directory, vol. I, 1896, page 556; and Supplement, 1899, page 41.

EASTERN ARCHIPELAGO.—Borneo, South coast.

Cape Selatan—Intended light.

No. 166 (third publication).—The British Admiralty has given notice (No. 340 of 1905) that it is intended to establish on cape Selatan, at an elevation of 107 feet above high water, a *white group flashing* light of the 5th order showing groups of two short flashes *every ten seconds*, and visible in clear weather from a distance of 16 miles from the bearing of S. 76° E., through east and north, to N. 88° W.; it will be shown from an iron framework support, 108 feet high, painted white. The dwelling will be white with a red roof.

Approximate position, lat. 4° 10½′ S., long. 114° 39′ E.

This light will probably be completed in November, but further notice will be given when it has been established.

(Variation 2° Easterly in 1905.)

This Notice affects the following Admiralty Chart:—Eastern archipelago, No. 941b: Also, List of Lights, part VI, 1905, page 95; and Eastern Archipelago, vol. II, 1904, page 266.

EASTERN ARCHIPELAGO—CELEBES, SALAGAR STRAIT.

Pamatata light—Intended alteration in.

No. 167 (third publication).—The British Admiralty has given notice (No. 341 of 1905) that it is intended to alter Pamatata light from white fixed to *white group flashing* showing two short flashes *every ten seconds.*

Approximate position on Chart No. 941*b*, lat. 5° 43½′ S., long. 120° 29′ E.

Further notice will be given when this alteration has been made.

This Notice affects the following Admiralty Charts:—Eastern Archipelago, No. 941b: Also, List of Lights, part VI, 1905, No. 548; and Eastern Archipelago, part II, 1904, page 348.

CHINA SEA—SINGAPORE.

Fort Canning and Mount Faber—Instructions with regard to Time Balls.

No. 168 (third publication).—With reference to Notice to Mariners No. 152, dated 8th August 1896, issued by this Office, the Master Attendant, Straits Settlements, has given notice,* dated 28th April 1905, that the Time Balls on Fort Canning and Mount Faber are dropped daily at 1 P.M., mean-time of the 105th Meridian: being hoisted five minutes previously. The observatory at Mount Faber from which the Balls are dropped automatically by electricity is in latitude 1° 16′ 08″.33N. and longitude 103° 49′ 23″.86 E. When the Time Balls drop at 1 P.M., the corresponding Greenwich mean-time is 6 hours A.M. Should either of the Time Balls fail to drop correctly, through any cause, the ball in fault will be kept up about five minutes, and then lowered by hand; but it will be again hoisted about five minutes before 2 o'clock. When the Time Ball fails to act, or is under repair, the flag W will be hoisted.

An electric time-bell for the use of Shipping has been fitted in the Wharf Superintendent's Office, Tanjong Pagar. This time-signal is in connection with the Observatory Standard Clock and rings automatically at every hour of Greenwich mean-time. Chronometer comparisons may be obtained by applying at the said office.

**N.B.*—This Notice replaces Notice of 1st June 1896.

BAY OF BENGAL.

Caution—Passing a black flat-topped buoy.

No. 169 (third publication).—The Master of the S.S. *Surada* reports that when in latitude 10° 50′ N. and longitude 83° 32′ E. he passed a black flat-topped buoy with an eye-bolt or ring on the top. Mariners are hereby warned.

RED SEA.

Caution—Position of water-logged wreck of native dhow.

No. 170 (third publication).—The Master of the S.S. *Gaekwar* reports that on 29th April 1905, he passed water-logged wreck of a native dhow, about 80 feet long, 6 feet out of water aft, and 3 feet forward; right in track of vessels in Red Sea; lat. 27° 02′ N., long. 34° 25′ E., Shadwan light-house bearing N. 38° W. true, 32 miles distance.

Mariners are accordingly warned.

E. J. BEAUMONT, COMDR., R.I.M.,
Port Officer of Calcutta.

REGISTERED No. C209.]

No. 23 of 1905.

SUPPLEMENT TO

The Calcutta Gazette.

WEDNESDAY, JUNE 7, 1905.

OFFICIAL PAPERS.

[*Non-Subscribers to the* GAZETTE *may receive the* SUPPLEMENT *separately on payment of five rupees per annum if delivered in Calcutta, or seven rupees and eight annas if sent by post.*]

CONTENTS.

	Page.		Page.
RESOLUTION recorded on the Annual Returns of the Lunatic Asylums in Bengal for the year 1904	843	RESULTS of the Meteorological Observations taken at the Alipore Observatory from 28th May to 3rd June 1905 ...	853
Weather and Crop Report for the week ending the 5th June 1905	847	Bengal and North-Western Railway for the month of March 1905	854
Circular and Eastern Canals for the week ending Saturday the 3rd June 1905	851	Bengal-Nagpur Railway during the month of March 1905	856
Abstract statement showing Tollage on Canals in Bengal classed as Major and Minor Works for the month of April 1905	852	Weekly Return of Traffic Receipts on Indian Railways ...	858

RESOLUTION RECORDED ON THE ANNUAL RETURNS OF THE LUNATIC ASYLUMS IN BENGAL FOR THE YEAR 1904.

MUNICIPAL DEPARTMENT—MEDICAL.

Darjeeling, the 24th May 1905.

RESOLUTION—No. 789T.—M.

READ—

The annual returns of the Lunatic Asylums in Bengal for the year 1904.

Read also—

The annual returns of the Lunatic Asylums in Bengal for the year 1903 and the Resolution recorded by Government thereon.

The returns of the Lunatic Asylums in Bengal for 1904 were received by Government on the 6th May, or only five days after the due date.

2. The daily average population of the asylums in 1904 was higher than in any year since 1891, while the admissions during the year and the number under detention at its close were the highest on record. The total number of lunatics in the asylums is less than 5 per cent. of the persons returned as of unsound mind at the last Census, and there are often marked differences in the number of admissions from adjoining districts. In 1904, for instance, 53 lunatics were sent to an asylum from Calcutta and 37 from the 24-Parganas, but only two from Nadia and one from Jessore; 19 were sent from Dacca and 10 from Backergunge, but only two from Mymensingh and none at all from Tippera. Such variations must, to some extent at least, be due to the idiosyncracies of the officers having authority to order detention in an asylum. The number of admissions fell suddenly about 1891, when it was

laid down that, apart from criminal lunatics, only those persons should be confined in asylums who are regarded as dangerous or who are in such a state of destitution that their admission is demanded by common humanity; but during the last four years it has again risen steadily. This may be due to the fact that the standing orders on the subject have in some districts been overlooked, and attention will again be drawn to them.

3. The number of lunatics in asylums is affected not only by the number of admissions but also by the time for which they are detained, and the Inspector-General of Civil Hospitals expresses a doubt whether, in the case of criminal lunatics, the orders of Government enjoining the release of harmless lunatics convicted of trivial offences have been strictly observed. He has already drawn the attention of Superintendents to this matter.

4. The mean death-rate was 92 per mille in 1904, against 100 in the previous year. There are great differences in the figures for the different institutions; and whereas in the Dacca and Berhampore Asylums the death-rate was 67 per mille, at Dullunda it was no less than 128. In considering these figures it must be remembered that the inmates of an asylum are comparable with patients in a hospital rather than with prisoners in a jail. Most of them suffer from some form or another of organic disease, such as tubercle or dysentery; and their condition is often serious before they reach the asylum. This was especially the case during the year under review at the Dullunda Asylum, where no less than nine of the new admissions were found to be suffering from phthisis. The death-rate of the asylums in England in 1903 was 104 per mille, or 12 more than the rate now reported for Bengal.

5. Some progress has been made during the year in the scheme for a Central Asylum for native lunatics, where they may be under the continuous care of a highly-trained specialist. The Lieutenant-Governor's proposals for a similar reform in the case of European lunatics are now before the Government of India. The urgent necessity for this reform was pointed out in the Resolution on the returns for 1903. Meanwhile Sir Andrew Fraser notices with satisfaction the Inspector-General's opinion that the asylums have been managed by the Superintendents with judgment and care, and that, so far as is possible under existing conditions, every effort is made to render the lives of their unfortunate inmates comfortable and healthy.

By order of the Lieutenant-Governor of Bengal,

E. A. GAIT,

Offg. Secretary to the Govt. of Bengal.

WEATHER AND CROP REPORT.

For the week ending the 5th June 1905.

Burdwan.—Rainfall at Sadar 1·59, Kalna 1·28, Katwa 2·46, Raniganj 1·29. Sowing of early rice and jute almost over. Ploughing continues. Standing crops doing well. Fodder sufficient. Cattle-disease reported from Purbasthali and Raniganj. Scarcity of water reported from Asansol. Common rice sells as follows :—

	Srs.	ch.	
Sadar	14	0	per rupee.
Kalna	12	5	
Katwa	13	12	
Raniganj	13	8	

Birbhum.—Rainfall at Sadar 0·77, Rampur Hât 2·00. Weather sultry. Sowing of paddy commenced. Sugarcane doing well. Fodder and water sufficient. Common rice sells as follows :—

	Srs.	ch.	
Sadar	14	4	per rupee.
Rampur Hât	15	0	

Bankura.—Rainfall at Sadar ·40, Vishnupur 1·91. Weather sultry. Ploughing continues. Paddy being sown. Recent rain has done good to sugarcane. No cattle-disease. Fodder and water sufficient. Common rice sells as follows :—

	Srs.	ch.	
Sadar	15	0	per rupee.
Vishnupur	15	0	

Midnapore.—Rainfall at Sadar 1·28, Contai 0·97, Tamluk 0·11, Ghatal 0·62. Sowing of early rice nearly finished. Summer rice being threshed. Ploughing and sowing of winter rice going on. Transplantation of sugarcane finished. Fodder and water sufficient. Common rice sells as follows :—

	Srs.	ch.	
Sadar	15	0	per rupee.
Contai	18	0	
Tamluk	14	0	
Ghatal	14	0	

Hooghly.—Rainfall at Sadar 3·02, Serampur 0·18, Arambagh 1·49. Weather very hot Early rice and jute doing well. Fodder and water sufficient. No cattle-disease. Common rice sells as follows :—

	Srs.	ch.	
Sadar	10	0	per rupee.
Serampore	11	0	
Arambagh	13	5	

Howrah.—Report not received.

24-Parganas.—Rainfall at Sadar 0·53, Barasat 3·29, Barrackpore 0·45, Basirhat 3·23, Diamond Harbour 0·08. Weather seasonable. Sowing of early rice and jute continues. The rainfall in the Barasat and Basirhat subdivisions has done good to jute and early paddy. Prospects good. Condition of cattle good. Supply of fodder and water sufficient. Common rice sells at 12 seers per rupee.

Nadia.—Rainfall at Sadar 6·67, Kushtia 5·20, Meherpur 2·52, Chuadanga 7·25, Ranaghat 1·96. Weather cloudy and hot. Harvesting and weeding of early paddy and jute going on. Fodder and water sufficient. No cattle-disease. Common rice sells as follows :—

	Srs.	ch.	
Sadar	12	5	per rupee.
Kushtia	14	0	
Meherpur	10	0	
Chuadanga	12	8	
Ranaghat	13	0	

Murshidabad.—Rainfall at Sadar 4·84, Kandi 6·79, Jangipur 2·06, Lalbagh 4·64. Weather seasonable. Recent rain has done good to the standing crops. Early rice plants doing well and winter rice seedlings are being grown. Sugarcane planting finished at Kandi. No cattle-disease. Fodder and water sufficient. Common rice sells as follows :—

	Srs.	ch.	
Sadar	13	0	per rupee.
Kandi	13	8	
Jangipur	14	8	
Lalbagh	12	8	

Jessore.—Rainfall at Sadar 3·32, Jhenida 6·40, Magura 6·22, Narail 6·29, Bangaon 3·13. Weather seasonable. Sowing continues. Fodder and water sufficient. Common rice sells as follows:—

	Srs.	ch.	
Sadar	14	0	per rupee.
Jhenida	13	0	
Magura	12	8	
Narail	13	5	
Bangaon	13	5	

Khulna.—Rainfall at Sadar 3·15, Bagerhat 1·89, Satkhira 1·91. Weather seasonable. Sowing of autumn and winter rice and jute is estimated at 53, 10 and 82 per cent. respectively. State of summer rice favourable. No cattle-disease. Fodder and water sufficient. Common rice sells as follows:—

	Srs.	ch.	
Sadar	14	8	per rupee.
Bagerhat	15	0	
Satkhira	13	0	

Rajshahi.—Rainfall at Sadar 4·18, Nator 5·66, Naugaon 2·75. No cattle-disease. Weather hot. Fodder and water sufficient. Common rice sells as follows:—

	Srs.	ch.	
Sadar	15	0	per rupee.
Nator	14	12	
Naugaon	13	8	

Dinajpur.—Rainfall at Sadar 4·22, Thakurgaon 1·27, Balurghat 10·37. Weather seasonable. Jute and autumn crops look promising. Fodder and drinking-water sufficient. Common rice sells as follows:—

	Srs.	ch.	
Sadar	14	0	per rupee.
Balurghat	14	0	
Thakurgaon	13	0	

Jalpaiguri.—Rainfall at Sadar ·02, Alipur Duars ·25. Weather seasonable. Weeding of autumn rice and jute continues. Lands are being ploughed for winter rice. Fodder and water sufficient. Common rice sells at 13 seers per rupee.

Darjeeling.—Rainfall at Sadar 2·59. Weather seasonable. *Hills*—Autumn rice, maize, potato and *marua* doing well. *Terai*—Condition of jute and autumn crops good. Coarse rice sells as follows:—

	Srs.	ch.	
Hills	9	0	per rupee.
Terai	14	0	

Maize sells at Darjeeling and Kalimpong at 13 seers per rupee.

Rangpur.—Rainfall at Sadar 5·87, Gaibanda 9·72, Kurigram 4·43, Nilphamari 4·47. Weeding of jute going on. Prospect of standing crops fair. Common rice sells at 12 seers per rupee at all subdivisions.

Bogra.—Rainfall at Sadar 4·74. Fall general. Weather hot and cloudy. Weeding of early rice and jute going on. Cultivation for winter rice going on in places. Fodder and water sufficient. No cattle-disease. Common rice sells at 13½ seers per rupee.

Pabna.—Rainfall at Sadar 4·34, Sirajganj 7·51. Fall general throughout the district. Weather rainy, cloudy and hot. Prospects of crops fair. Weeding of paddy and jute continues. No cattle-disease. Fodder and water sufficient. Common rice sells at 12 seers per rupee.

Dacca.—Rainfall at Sadar 2·80. Fall general. Prospects of crops good. Weather seasonable. Fodder available. No cattle-disease. Common rice sells as follows:—

	Srs.	ch.	
Sadar	14	0	per rupee.
Manikganj	12	0	
Munshiganj	13	0	
Narayanganj	13	0	

Mymensingh.—Rainfall at Sadar 4·63, Jamalpur 7·20, Kishorganj 9·31, Netrakona 8·71, Tangail 6·84. Weather seasonable. Condition of crops fair. Early rice and jute crops are being weeded. Transplantation of winter rice commenced. Outturn of tobacco 50 per cent. No cattle-disease. Fodder and water ample. Common rice sells as follows:—

	Srs.	ch.	
Sadar	13	8	per rupee.
Jamalpur	15	0	
Kishorganj	14	14	
Netrakona	16	0	
Tangail	13	0	

Faridpur.—Rainfall at Sadar 2·06, Goalundo 5·65, Madaripur 1·95. Weather hot. Fodder and water sufficient. Prospects of crops good. Common rice selling at 12 seers a rupee.

Backergunge.—Rainfall at Sadar 3·45. Fall general. Weather cloudy with occasional rain. No cattle-disease. Fodder sufficient. Common rice sells at 13½ seers per rupee.

Tippera.—Rainfall at Sadar 2·36, Brahmanbaria 2·80, Chandpur 3·33. Weather seasonable. State of standing crops good. Sowing of *aus* complete and that of *aman* going on. Fodder and water sufficient. No cattle-disease. Common rice sells as follows :—

	Srs.	ch.	
Sadar	12	8	per rupee.
Brahmanbaria	14	8	
Chandpur	14	0	

Noakhali.—Rainfall at Sadar 4·97. Feni 3·65. Weather seasonable. Sowing of *aus* continues. Prospects fair. Cattle-disease reported. Fodder and water sufficient. Common rice sells as follows :—

	Srs.	ch.	
Sadar	12	0	per rupee.
Feni	15	0	

Chittagong.—Rainfall at Sadar 5·50, Cox's Bazar 2·35. Cultivation of *aus* crops going on. Weather cloudy wtth occasional rain. Cattle disease reported. Fodder and water sufficient. Common rice sells as follows :—

	Srs.	ch.	
Sadar	11	7	per rupee.
Cox's Bazar	14	13	

Chittagong Hill Tracts.—Rainfall 2·88. Weather hot. *Jum* crop progressing. Cattle-disease abating. Common rice sells at 14 seers per rupee.

Patna.—Rainfall at Sadar 1·58, Barh 0·77, Behar 1·34, Dinapur 1·48, Hilsa 1·89, Bikram 0·08. Weather hot. Rainfall has done good to sugarcane and *cheena*. Lands are being prepared for *bhadoi* sowing. Fodder and water sufficient. Common rice sells as follows :—

	Srs.	ch.	
Sadar	13	8	per rupee.
Barh	13	0	
Bihar	13	8	
Dinapore	13	0	

Gaya.—Rainfall at Jahanabad 0·18. Weather hot with east winds. Harvesting of *chuna* millet over. Sugarcane continues promising. Fodder and water for cattle sufficient. Common rice sells at 12¾ seers per rupee.

Shahabad.—Rainfall nil. Weather hot and cloudy with east winds. Sugarcane doing well. Fodder and water abundant. Common rice sells at 14 seers per rupee at Sadar.

Saran.—Rainfall at Sadar 0·55, Sewan 0·39, Weather unsettled. Threshing of *rabi* finished. Sugarcane and *cheena* doing. Fields are being prepared for *bhadoi*. No cattle disease. Fodder and water sufficient. Common rice and maize sell at 12½ and 18 seers per rupee respectively at Sadar.

Champaran.—Rainfall at Sadar 1·26, Bettiah, 1·19. Rain has improved the prospects of standing crops and facilitated the sowing of paddy and *bhadoi* crops. Preparation of lands in progress. No cattle-disease. Fodder and water sufficient. Common rice and maize sell at 14½ and 21½ seers per rupee respectively.

Muzaffarpur.—Rainfall at Sadar 0·87, Hajipur 1·10, Sitamarhi 0·92. Weather hot and occasionally cloudy. Prospects of crops good. Sowing of paddy and *bhadoi* crops going on Fodder and water sufficient. No cattle-disease. Common rice and maize sell at 12 and 17 seers per rupee respectively at Sadar.

Darbhanga.—Rainfall at Sadar 0·27, Samastipur 0·54, Madhubani 0·41. Weather hot. Preparation for *bhadoi* crops in progress. Fodder and water sufficient. Cattle-disease reported from Singhia outpost. Common rice sells as follows :—

	Srs.	ch.	
Sadar	15	6	per rupee.
Samastipur	13	8	
Madhubani	13	10	

Monghyr.—Rainfall at Sadar 4·89, Begusarai 5·58, Jamui 2·37. Weather cloudy with occasional showers. Lands are being prepared for *bhadoi* and sowing has already commenced in parts. Rains have done good to sugarcane. Fodder and water sufficient. No cattle-disease. Common rice sells as follows:—

	Srs.	ch.	
Sadar	12	8	per rupee.
Jamui	12	0	
Begusarai	14	0	

Bhagalpur.—Rainfall at Sadar 0·87, Banka 0·86, Madhipura 2·85, Supaul 2·32. Weather hot and cloudy. Rain has done much good to agriculture. Sowing of *makai* and winter rice has begun in some places. Cattle-disease reported from thanas Protapganj, Madhipura, Kishenganj. Fodder and water sufficient. Common rice sells as follows:—

	Srs.	ch.	
Sadar	14	0	per rupee.
Banka	15	0	
Madhipura	15	0	
Supaul	16	0	

Purnea.—Rainfall at Kishanganj 0·35. Sowing of jute and *bhadoi* crops finished. Weeding thereof begun. Sowing of *arhar* at Sadar and Araria going on. Condition of standing crops good. Fodder and water sufficient. No cattle-disease. Common rice sells as follows:—

	Srs.	ch.	
Sadar	11	8	per rupee.
Araria	14	0	
Kishanganj	11	8	

Malda.—Rainfall at Sadar 4·57, Shibganj 1·30, Chanchal 3·87, Gazole 9·60, Nawabganj 2·32, Gomastapur 9·01. Weather cloudy and rainy. Lands being prepared for winter rice. Weeding of *bhadoi* and jute continues. Harvesting of *boro* still going on. No cattle-disease. Fodder and water sufficient. Common rice sells at 11½ seers per rupee.

Sonthal Parganas.—Rainfall at Sadar 0·81, Deoghur 2·51, Godda 1·42, Jamtara 0·86, Pakour 2·40, Rajmahal 5·99. Weather hot. Sugarcane doing well. Sowing of paddy, *mandua*, and maize continues. Fodder and water sufficient. Common rice sells at 13 seers per rupee at Sadar.

Cuttack.—Rainfall at Sadar 0·75. Fall general. Weather seasonable. *Dalua* and tobacco being harvested. Sugarcane growing. *Biali* and *saradh* being sown. Cattle-disease reported from Jajpur. Fodder and water sufficient. Common rice sells at 15¾ seers per rupee at Sadar.

Balasore.—Rainfall at Sadar 0·18. Ploughing continues. Sugarcane plants thriving. No cattle-disease. Fodder and water sufficient Common rice sells as follows:—

	Srs.	ch.	
Sadar	17	0	per rupee.
Bhadrak	18	0	

Angul.—Rainfall at Sadar 1·44, Phulbani 1·32. Weather hot and cloudy. Ploughing and sowing of winter rice in progress. Sugarcane growing well. Fodder and water available. Common rice sells as follows:—

	Srs.	ch.	
Sadar	18	0	per rupee.
Khondmals	18	0	

Puri.—Rainfall at Sadar 1·34, Khurda 3·52. Weather seasonable. *Dalua* and cotton being harvested. Sugarcane doing well. *Saradh* and *bhadoi* paddy being sown. Condition of miscellaneous crops good. Fodder and water-supply sufficient. Common rice sells at 15¾ seers per rupee.

Hazaribagh.—Rainfall at Giridih 1·06. Cattle-disease reported from one thana. Fodder and water sufficient. Common rice sells as follows:—

	Srs.	ch.	
Sadar	11	8	per rupee.
Giridih	12	0	

Mandua and Indian-corn sell at 20 and 15 seers per rupee respectively at Sadar.

Ranchi.—Rainfall nil. Weather seasonable. Ploughing and manuring continue. Sowing of paddy going on in places. Cattle-disease reported from several thanas. Fodder and water sufficient. Common rice sells as follows:—

	Srs.	ch.	
Sadar	12	0	per rupee.
Gumla	16	0	

Palamau.—Rainfall at Sadar 0·23. Weather hot. Sugarcane in good state. Cattle-disease reported. Fodder and water available. Common rice sells at 12½ seers per rupee at Sadar.

Manbhum.—Rainfall at Sadar 0·36. Gobindpur 1·33. Weather seasonable. Prospects of crops good. Autumn rice, *mandua*, cotton and *arhar* are being sown. Fodder and water sufficient. Cattle-disease reported from thana Purulia. Common rice sells as follows:—

	Srs.	ch.	
Sadar	13	0	per rupee.
Gobindpur	12	0	

Singhbhum.—Rainfall 0·80. Prospects of crops good. Sowing of paddy in progress. Fodder and water sufficient. Common rice sells at 14 seers per rupee.

General Summary.—Rainfall during the week was fairly general and in places heavy. Sowing of early rice and juta is approaching completion, but that of winter rice and autumn crops is still in progress. Prospects continue favourable. Cattle-disease reported from a few districts, but there is no want of fodder or water. The price of common rice has an upward tendency, but there is nothing abnormal in the figures.

By order of the Lieutenant-Governor of Bengal,

R. W. CARLYLE,

Offg. Chief Secretary to the Govt. of Bengal.

REVENUE DEPARTMENT.

The 6th June 1905.

GOVERNMENT OF BENGAL, IRRIGATION DEPARTMENT.

Approximate Return of Traffic on the Circular and Eastern Canals for the week ending Saturday, the 3rd June 1905, as compared with the corresponding week of the previous year.

Nature of Cargo.	Week ending Saturday, the 3rd June 1905.			Week ending Saturday, the 4th June 1904.		
	Number of boats.	Weight of cargo.	Tollage.	Number of boats.	Weight of cargo.	Tollage.
		Mds.	Rs.		Mds.	Rs.
Rice and paddy	488	70,418	1,025	428	73,850	1,091
Jute	3	7,900*	64	26	15,700†	155
Firewood	35	31,800	456	77	83,265	1,239
Other articles	623	1,92,121	2,508	781	2,28,183	2,820
Total ...	1,149	3,02,239	4,053	1,312	4,00,998	5,305

* Weight by canal measurement = 3,637½ maunds.
† Ditto ditto = 13,925 „

IRRIGATION DEPARTMENT, BENGAL.

Abstract Statement showing Tollage on Canals in Bengal classed as Major Works for the month of April 1905, as compared with that of the corresponding month of the previous year.

Canals.	Tollage, 1905-06.		Tollage, 1904-05.	
	During the month.	To end of the month.	During the month.	To end of the month.
Orissa Canals.	Rs. A. P.	Rs. A. P.	Rs. A. P.	Rs. A. P.
Taldanda Canal System	(—) 1 13 6*	(—) 1 13 6	3,253 7 0	3,253 7 0
Kendrapara ditto	4,715 7 9	4,715 7 9	234 7 3	234 7 3
High Level, Range I	1,611 12 3	1,611 12 3	1,031 14 0	1,031 14 0
Ditto „ II	293 15 3	293 15 3	227 3 6	227 3 6
Ditto „ III	55 3 3	55 3 3	46 10 0	46 10 0
Jajpur Canal	70 1 9	70 1 9	52 11 6	52 11 6
Total Orissa Canals ...	6,744 10 9	6,744 10 9	4,846 5 3	4,846 5 3
Midnapore Canal ...	8,247 1 3	8,247 1 3	4,852 13 0	4,852 13 0
Hijili Tidal Canal ...	6,697 12 3	6,697 12 3	6,017 0 9	6,017 0 9
Sone Canals.				
Patna Canal System ...	2,121 7 0	2,121 7 0	1,565 0 0	1,565 0 0
Arrah ditto ...	754 12 0	754 12 0	861 3 6	861 3 6
Buxar ditto ...	290 8 0	290 8 0	323 0 3	323 0 3
Total Sone Canals ...	3,166 11 0	3,166 11 0	2,749 3 9	2,749 3 9
Grand Total ...	24,856 3 3	24,856 3 3	18,465 6 9	18,465 6 9

* Amount remitted during April 1905 on empty boat of the Salt Department.

Darjeeling,
The 3rd June 1905.

W. A. Inglis,
Secy. to the Govt. of Bengal.

IRRIGATION DEPARTMENT, BENGAL.

Abstract Statement showing Tollage on Canals in Bengal classed as Minor Works and Navigation for the month of April 1905, as compared with that of the corresponding month of the previous year.

Canals.	Tollage, 1905-06.		Tollage, 1904-05.	
	During the month.	To end of the month.	During the month.	To end of the month.
	Rs. A. P.	Rs. A. P.	Rs. A. P.	Rs. A. P.
Calcutta and Eastern Canals ...	27,594 1 9	27,594 1 9	17,339 13 0	17,339 13 0
Tolly's Nala	9,121 5 6	9,121 5 6	5,936 7 6	5,936 7 6
Total ..	36,715 7 3	36,715 7 3	23,276 4 6	23,276 4 6
Orissa Coast Canal ...	2,817 7 3	2,817 7 3	2,793 10 3	2,793 10 3
Nadia Rivers ...	3,812 2 6	3,812 2 6	3,096 8 0	3,096 8 0
Grand Total ...	43,345 1 0	43,345 1 0	29,166 6 9	29,166 6 9

Darjeeling,
The 3rd June 1905.

W. A. Inglis,
Secy. to the Govt. of Bengal.

Results of the Meteorological Observations taken at the Alipore Observatory from 28th May to 3rd June 1905.

Month.	Date.	Maximum sunshine.	Number of hours of bright sunshine.	Mean pressure barometer at 32° Fahr.	Temperature: Mean	Maximum.	Range.	Minimum.	Hygrometry: Mean wet bulb.	Vapour tension.	Dew point.	Humidity.	Wind: Prevailing direction.	Miles recorded.	Rain.	Weather.
1905.		°		Inches.	°	°	°	°	°	Inch.	°	%			Inches.	
May	28th	147·2	9·6	29·689	88·0	93·7	13·6	80·1	90·9	0·962	78·1	78	S and SSE ...	207	Nil	Chiefly clear.
,,	29th	147·8	7·9	·654	87·9	92·8	11·4	81·4	82·1	1·018	79·8	77	SSE and S ...	157	,,	Partially cloudy; p.
,,	30th	142·7	3·1	·604	87·8	92·4	11·2	81·2	82 2	1·028	80·1	79	SSE and SSW ...	161	0·47	Chiefly cloudy, p.
,,	31st	150·8	6·5	·592	87·3	95 5	17·4	78·1	81·1	0 984	78·7	77	S, SSW and ESE	124	0·06	Partially cloudy.
Jne	1st	148·9	1·3.	·594	86·2	90·4	9·2	81·4	81·3	1·004	79 3	80	SE by S, E and S by W.	82	Nil	Chiefly cloudy, o.
,,	2nd	148·9	9 3	·566	86·1	94·1	15·5	78·6	80·0	0·956	77·9	79	S by W, ESE and SE by E.	85	,,	Partially cloudy.
,,	3rd	147·7	7·1	·569	87·0	94 7	14·8	79·9	80·2	·951	77·7	76	SE by E, NNE and ENE.	82	,,	Partially cloudy.

	Inches.
The mean pressure of the seven days	29·610
The average pressure of the corresponding period for 24 years, Surveyor-General's Office	29·584
	Hours.
The total number of hours of bright sunshine	44·8
The maximum possible number of hours of sunshine	93·5
	°
The mean temperature of the seven days	87·2
The average temperature of the corresponding period for 24 years, Surveyor-General's Office	86·5
The extreme variation of temperature	17·4
The maximum temperature	95·5
	Miles.
The highest velocity of the wind in one hour	14
	%
The mean relative humidity	77
The average relative humidity of the corresponding period for 24 years, Surveyor-General's Office	76
	Inches.
The total fall of rain from 28th May to 3rd June 1905	0·53
The average fall of the corresponding period for 24 years, Surveyor-General's Office	1·68
The total fall from 1st January to 3rd June 1905	21·03
The average fall of the corresponding period for 24 years, Surveyor-General's Office	10·28

The mean pressure, temperature, etc., are deduced from the traces of the Barograph and Thermograph, and from eye observations.

The maximum and minimum temperatures are obtained from self-registering thermometers. All the thermometers are verified and the readings have been corrected to a standard constructed and verified at the Kew Observatory. They are exposed under a thatched shed open at the sides, and are suspended four feet above the ground.

The barometer readings are corrected to those of the standard, Newman's No. 86, formerly at the Surveyor-General's Office.

The hygrometric elements are obtained from Tables III, IV and V of the official tables computed in the Meteorological Office, and based on Regnault's modifications of August's formula.

The directions and the movement of the wind are taken from the trace of a Beckley's anemograph.

The mouth of the rain-gauge is one foot above the ground. Rainfall reported on any day is for 24 hours preceding 8 A.M. of that day.

o, overcast; p, passing temporary showers.

METEOROLOGICAL OFFICE, GOVT. OF INDIA,
Alipore (Calcutta), the 5th June 1905.

G. W. KÜCHLER,
for Meteorological Reporter to the Govt of India and Director-General of Indian Observatories.

BENGAL AND NORTH-WESTERN RAILWAY.

Statement of goods traffic for the month of March 1905, compared with the corresponding period in 1904.

Description of Goods.	1904.		1905.		Increase.		Decrease.		Explanation of fluctuations by the Traffic Manager.
	Tons.	Rs.	Tons.	Rs.	Tons.	Rs.	Tons.	Rs.	
I.—Apparel, including drapery, haberdashery, millinery, uniforms, accoutrements, boots and shoes.	65	889	74	843	9	.....	.....	46	
II.—Coal and coke carried for the Public and Foreign Railways.	9,964	21,912	11,246	24,635	1,282	2,723	.....	.....	
III.—Cotton—									
1. Raw	9	130	47	1,091	38	952	.....	.....	
2. Manufactured—									
(a) (b) Twist and yarn. European	41	585	61	829	20	244	.....	.....	
(a) (b) Twist and yarn. Indian ...	255	3,237	374	4,047	119	1,410	.....	.....	
(c) (d) Piece-goods European	1,160	11,077	1,707	15,882	547	4,805	.....	.....	
(c) (d) Piece-goods Indian ...	332	3,075	765	8,146	443	5,071	.....	.....	Demand.
(e) Others	43	497	48	574	6	77	.....	.....	
IV.—Chemicals, excepting saltpetre	44	167	88	190	44	23	.....	.....	
V.—Drugs—									
1. Intoxicating, other than opium.	.....	.....	1	19	1	19	.....	.....	
2. Non-intoxicating—									
(a) Medicinal preparations.	.....	.....	.....	.....	.....	.....	.....	.....	
(b) Others	1,501	8,920	1,636	8,308	135	.....	.....	554	
VI.—Dyes and Tans—									
1. Al (Morinda citrifolia)	.....	.....	.....	.....	.....	.....	.....	.....	
2. Alizarine and aniline dyes.	3	43	3	20	.....	.....	.....	23	
3. Cutch	38	190	44	208	6	18	.....	.....	
4. Indigo	21	270	35	295	14	25	.....	.....	
5. Myrabolams	8	74	4	76	.....	2	4	.....	
6. Tanning barks	233	650	96	308	.....	.....	137	453	
7. Turmeric	377	3,663	401	3,479	24	.....	.....	184	
8. Others	33	333	97	781	64	448	.....	.....	
VII.—Fodder—									
1. Oilcake	797	2,705	722	2,019	.....	.....	75	686	
2. Hay, straw, and grass...	1,053	9,731	1,599	16,885	546	7,153	.....	.....	Larger export from Tulsipur.
VIII.—Fruits and vegetables, fresh	42	179	1,152	1,492	1,110	1,313	.....	.....	
IX.—Grain and Pulse—									
1. Gram and pulse ...	3,990	19,012	5,398	20,444	1,408	1,433	.....	.....	
2. Jawar and bajra ...	42	212	73	151	30	.....	.....	61	
3. 4. Rice in the husk ... not in the husk	5,305	17,681	9,188	15,595	.....	.....	1,117	4,091	
	21,822	97,737	35,007	1,61,392	13,185	66,555	.....	.....	Demand.
5. Wheat	1,445	8,944	480	1,580	.....	.....	965	7,375	
6. Wheat-flour	282	1,557	414	2,856	132	1,299	.....	.....	
7. Makai	1,827	7,701	4,024	16,861	2,197	9,160	.....	.....	Do.
8. Others	2,915	10,764	2,505	8,098	.....	.....	410	2,066	
X.—Hides and Skins—									
1. Hides of cattle—									
(a) Dressed or tanned	.....	.....	23	229	23	229	.....	.....	
(b) Raw	847	5,978	908	6,082	140	74	.....	.....	
2. Skins of sheep and other animals—									
(a) Dressed or tanned	.....	.....	1	4	1	4	.....	.....	
(b) Raw	332	2,174	305	2,019	.....	.....	27	155	
XI.—Horns	13	103	7	74	.....	.....	6	29	
XII.—Hemp (Indian) and other fibres, excluding jute.	27	221	913	2,955	886	2,734	.....	.....	
XIII.—Jute—									
1. Raw	112	761	110	255	.....	.....	2	506	
2. Gunny-bags and cloth	1,599	9,646	1,447	8,457	.....	.....	152	1,189	
XIV.—Lac	166	619	141	401	.....	291	25	.....	
XV.—Leather—									
1. Unwrought	.....	.....	14	82	14	82	.....	.....	
2. Wrought, excepting boots and shoes.	15	92	9	67	.....	.....	6	25	
XVI.—Liquors—									
1. Ale and Beer	3	27	2	9	.....	.....	1	18	
2. Spirits of all kinds, including country spirits.	.....	.....	.....	.....	.....	.....	.....	.....	
3. Wine	20	250	14	144	.....	.....	6	106	
4. All other sorts, including toddy and fermented liquor, other than ale and beer.	.....	.....	.....	.....	.....	.....	.....	.....	
XVII.—Metals—									
1. Brass, unwrought ...	4	40	7	70	3	30	.....	.....	
2. ,, wrought ...	181	1,600	154	1,542	.....	.....	27	58	
3. Copper, unwrought ...	.....	.....	.....	.....	.....	.....	.....	.....	
4. ,, wrought ...	12	153	54	942	42	789	.....	.....	
5. Iron and steel—									
(a) Cast	14	126	86	746	72	621	.....	.....	
(b) Unwrought ...	4	18	13	42	9	24	.....	.....	
(c) Wrought	501	3,958	799	4,789	298	1,833	.....	.....	
(d) Manufactures ...	419	2,966	506	3,111	.....	145	23	.....	
6. Others	201	1,882	258	1,776	1	.....	.....	106	
XVIII.—Oils—									
1. Kerosine	1,249	4,098	1,965	5,080	716	3,082	.....	.....	
2. Castor	47	233	26	141	.....	.....	21	92	
3. Cocoanut	9	56	21	97	12	41	.....	.....	
4. Mustard and rape ...	50	404	39	232	.....	.....	11	172	
5. Others	18	120	22	119	4	.....	.....	1	

Description of Goods.	1904.		1905.		Increase.		Decrease.		Explanation of fluctuations by the Traffic Manager.
	Tons.	Rs.	Tons.	Rs.	Tons.	Rs.	Tons.	Rs.	
XIX.—Oilseeds—									
1. Castor	347	515	119	301	.....	.....	128	214	
2. Earthnuts	.....	.....	7	25	7	25	.....	.....	
3. Linseed	545	2,746	891	3,073	343	327	.....	.....	
4. Poppy	12	59	22	130	10	71	.....	.....	
5. Rape and mustard ...	8,183	48,189	6,523	35,302	.....	.....	1,660	12,887	Increase in previous year.
6. Til or jinjili	30	152	17	64	.....	.....	13	88	
7. Others	231	911	320	1,549	89	638	.....	.....	
XX.—Opium	1,251	16,632	570	7,331	.....	..	681	9,201	
XXI.—Paper and Pasteboard ...	176	884	256	916	80	32	... .	... ..	
XXII.—Provisions—									
1. Dried fruits and nuts ...	113	1,547	107	1,096	.....	.....	8	451	
2. Ghee	389	3,323	388	3,698	59	374	...	.....	
3. Others	3,114	9,113	3,104	8,993	.....	... ..	10	120	
XXIII.—Railway Plant and Rolling Stock carried for the Public and Foreign Railways—									
1. Locomotive engines and tenders and parts thereof.	.....	.....	.....	.....	.....	.....	.....	.....	
2. Carriages and trucks and parts thereof.	.....	.....	.....	.....	.....	.....	.....	.....	
3. Materials—									
(a) Steel rails and fish-plates.	.....	.....	.....	.....	.....	.....	.....	.....	
(b) Sleepers and keys of steel and cast-iron.	.....	.....	.....	.....	.....	.....	.....	.....	
(c) Others	.....	.....	...	...	.....	.....	.....	.....	
XXIV.—Salt	6,094	26,091	7,026	27,854	932	3,763	.....	.....	
XXV.—Saltpetre and other saline substances—									
1. Saltpetre	1,581	6,780	1,136	4,191	.....	.....	445	2,589	
2. Other saline substances	439	1,060	696	2,705	257	745	.....	.....	
XXVI.—Silk—									
1. Raw—									
(a) Foreign	.....	.....	.....	.....	.....	.....	.....	.....	
(b) Indian	2	25	1	8	.....	.....	1	17	
2. Piece-goods—									
(a) Foreign	.....	.....	.....	.....	.....	.....	.....	.....	
(b) Indian	.....	.....	.....	.....	.....	.....	.....	.....	
XXVII.—Spices—									
1. Betelnuts	328	2,826	372	2,680	44	.....	.....	146	
2. Cardamoms	258	2,670	7	111	.....	.....	251	2,559	
3. Chillies	2,457	11,888	1,715	10,547	.....	.....	742	1,341	
4. Ginger	207	2,090	278	2,802	71	712	.....	.....	
5. Pepper	61	504	66	635	20	131	.....	.....	
6. Others	193	1,434	208	1,541	15	107	.....	.....	
XXVIII.—Stone and lime	2,135	4,140	1,979	4,736	.....	596	156	.....	
XXIX.—Sugar—									
1. Refined or crystallised, including sugarcandy.	446	2,409	488	2,843	42	434	.....	.....	
2. Unrefined—									
(a) Sugar	4,356	28,460	3,941	30,578	.....	2,118	415	.....	
(b) Gur, rab, jaggery, molasses and other saccharine produce.	11,341	59,787	10,131	45,160	.....	.... .	1,210	13,627	
XXX.—Tea—									
1. Foreign	.....	.....	.....	.....	.....	.....	.....	.....	
2. Indian	2	24	3	48	1	24	.....	.....	
XXXI.—Tobacco—									
1. Unmanufactured ...	1,686	11,725	1,354	10,958	.....	.....	332	767	
2. Manufactured—									
(a) Cigars	4	79	2	45	.....	.....	2	34	
(b) Other sorts ...	10	90	16	127	6	37	.....	.....	
XXXII.—Wood—									
1. Timber, unwrought ...	1,539	6,663	2,341	7,514	802	852	.....	.....	
2. Logs	2,389	6,567	1,154	3,164	.....	.....	1,235	31,303	
3. Poles	.....	.....	182	932	182	932	.....	.....	
4. Manufactures	268	2,088	331	3,240	63	1,152	.. ..	.....	
XXXIII.—Wool—									
1. Raw	8	23	5	88	2	65	.....	.....	
2. Manufactured—									
(a) Carpets and rugs ...	1	9	6	84	5	75	.....	.....	
(b) } (c) } Piece-goods { European	.....	.....	4	44	4	44	.....	.....	
(c) } Piece-goods { Indian	3	33	108	339	105	306	.....	.....	
(d) Other sorts of manufactures.	.....	... .	3	12	3	12	.....	.....	
XXXIV.—All other articles of merchandise—									
1. Indigo-seed	140	1,156	392	3,711	252	2,555	... ..	.....	
2. Firewood	1,847	2,912	3,080	5,335	1,233	2,423	.....	.....	
3. Others not specified above.	3,891	18,737	5,632	11,210	1,741	.....	.....	7,527	
Total ...	115,096	5,49,632	134,777	6,07,798	29,954	1,31,248	10,273	73,079	

T. SIDDLE,
For Chief Auditor.

GORAKHPUR, *the 31st May 1905.*

BENGAL-NAGPUR RAILWAY.

Abstract of principal commodities carried during the month of March 1905, as compared with the corresponding period of previous year.

ARTICLES.	1905.		1904.		Total, 1905.	Total, 1904	Increase.	Decrease.
	Up.	Down.	Up.	Down.				
	Tons.	Tons.	Tons.	Tons.	Tons.	Tons.	Tons.	Tons.
I.—Apparel, including drapery, haberdashery, millinery, uniforms, accoutrements, boots and shoes.	14	7	12	4	21	16	5	...
II.—Coal and coke carried for the public and foreign railways.	40,721	91,778	88,201	15,682	132,499	103,883	28,616	.....
III.—Cotton—								
1. Raw	459	2,763	195	1,537	3,222	1,732	1,490	.....
2. Manufactured—								
(a) Twist and yarn, European	1	420	...	215	421	215	206	.....
(b) Ditto, Indian ...	330	841	365	573	1,171	938	233	...
(c) Piece-goods, European ...	430	344	277	88	774	365	409	.....
(d) Ditto, Indian ...	57	299	32	270	356	302	54	.....
(e) Others	7	.....	..	.....	7	...	7	.....
IV.—Chemicals excepting saltpetre ...	14	5	13	10	19	23	.....	4
V.—Drugs—								
1. Intoxicating, other than opium.	... ..	1	.....	2	1	2	.....	1
2. Non-intoxicating—								
(a) Medicinal preparations	....	...	.....	.....	...	.....	.....	.....
(b) Others	51	53	58	23	104	81	23	.....
VI.—Dyes and Tans—								
1. Al (morinda citrifolia)	... ..	.....	.....	... .	.....	.....	.	.....
2. Alizarine and aniline dyes ...	.....	...	.....	... ..	.....	.....	.....	.....
3. Cutch	5	2	1	...	7	1	6	.....
4. Indigo	2	.	.. ..		2	.....	2	...
5. Myrabolams	2,831	2,048	2,404	1,039	5,539	3,443	2,096	.....
6. Tanning barks	151	10	134	....	161	134	27	.....
7. Turmeric	169	409	199	405	578	585	10	.....
8. Others	186	19	24	16	205	40	165	.....
VII.—Fodder—								
1. Oilcake	304	85	329	14	449	343	106	...
2. Hay, straw and grass	155	127	104	118	282	222	60	... ..
VIII.—Fruits and vegetables, fresh	1,428	398	786	364	1,826	1,150	676	.....
IX.—Grain and Pulse—								
1. Gram and pulse	7,132	7,011	1,378	4,006	14,143	5,383	8,760	.....
2. Jowar and bajra	468	5	46	56	473	102	371	.....
3. Rice in the husk	2,497	4,350	415	3,698	6 877	4,113	2,764	.....
4. ,, not in the husk	21,028	10 092	13,997	12,014	32,020	27,011	5,009	.....
5. Wheat	2,982	2,0-7	2,683	381	5,069	3,084	2,005	.. ..
6. ,, flour	320	22	220	72	342	272	80	.....
7. Others	513	18	102	173	531	275	256	.....
X.—Hides and skins—								
1. Hides of cattle—								
(a) Dressed or tanned ..	.....	...	.....	.....	.....	.....	.....	.. ..
(b) Raw	147	667	205	550	814	755	59	.....
2. Skins of sheep and other animals—								
(a) Dressed or tanned ..	... .	.....	.....	.....	.....	.....	.....	2
(b) Raw	28	23	5	14	51	19	32	.....
XI.—Horns	11	5	19	6	16	25		9
XII.—Hemp (Indian) and other fibres, excluding jute.	122	1,060	190	1,305	1,302	1,365	.....	163
XIII.—Jute—								
1. Raw	246	248	73	182	494	245	239	.....
2. Gunny-bags and cloth	1,778	319	1,640	377	2,097	1,517	280	... ..
XIV.—Lac	98	453	79	197	576	276	300	.....
XV.—Leather—								
1. Unwrought	67	18	77	12	85	89	....	4
2. Wrought excepting boots and shoes.	1	1	1	...	2	1	1	.....
XVI.—Liquors—								
1. Ale and beer	6	68	9	52	74	61	13	...
2. Spirits of all kinds, including country-spirit and wine.	47	29	34	15	76	49	27	...
3. Wine	...	.....	.	.. ...	.....	.....	.....	.....
4. All other sorts, including toddy and fermented liquor, other than ale and beer.	.....	.....	.....	.....	.....	.....	.....	.....
XVII.—Metals—								
1. Brass, unwrought	.....	...	.....	.. ...	. ...	...	.....	.....
2. ,, wrought	86	66	51	29	152	80	72	.....
3. Copper, unwrought	.....	.....	.....	1	.... .	1	..	1
4. ,, wrought	12	7	7	1	19	8	11	.....
5. Iron and steel—								
(a) Cast	5	1	34	1	6	35	.. .	29
(b) Unwrought	.....	.....	.....	.. ...	.... .	.....	.....	.....
(c) Wrought	825	929	300	1,401	1,754	1,791	.....	37
(d) Manufactures	180	85	54	57	251	111	140	.
6. Others	20,934	743	10,206	1,211	21,667	11,477	10,190	.....
XVIII.—Oils—								
1. Kerosine	2,000	264	1,944	156	2,264	2,100	164	.....
2. Castor	13	241	10	113	256	123	134	. ..
3. Cocoanut	51	50	26	22	101	58	43	.....
4. Mustard and rape	71	21	3	.....	92	3	89	.....
5. Others	71	66	99	29	157	128	9	.. ...

ARTICLES.	1905. Up.	1905. Down.	1904. Up.	1904. Down.	Total, 1905.	Total, 1904.	Increase.	Decrease.
	Tons.	Tons.	Tons.	Tons.	Tons.	Tons.	Tons.	Tons.
XIX.—Oilseeds—								
1. Castor	157	273	37	124	430	161	269	
2. Earthnuts	.....	.....	.....	.....	.....	.....	.....	.....
3. Linseed	2,421	707	1,031	906	3,128	1,937	1,201	.....
4. Poppy	18	9	1	3	27	4	23	.....
5. Rape and mustard	795	1,065	1,379	511	1,860	1,890	.....	30
6. Til or jinjili	627	1,207	3,056	3,038	1,994	6,094	.....	4,100
7. Others	273	557	193	734	829	917	.....	88
XX.—Opium	.....	1	2	1	1	3	.....	2
XXI.—Paper and pasteboard	109	196	221	1	235	222	13	.....
XXII.—Provisions—								
1. Dried fruits and nuts	596	149	389	148	745	537	208	.....
2. Ghee	73	317	47	202	390	249	141	.....
3. Others	114	193	76	181	307	197	110	.....
XXIII.—Railway plant and rolling-stock carried for the public and foreign railways—								
1. Locomotive engines and tenders and parts thereof.	8	.....	44	46	8	90	.....	82
2. Carriages and trucks and parts thereof.	1	.....	1	184	1	185	.....	184
3. Materials—								
(a) Steel rails and fish-plates.	45	15	31	34	60	65	.....	5
(b) Sleepers and keys of steel and cast-iron.	.....	.....	174	..	..	174	.....	174
(c) Others	307	5,858	1,793	13,296	6,165	15,089	.....	8,924
XXIV.—Salt	3,450	3,190	3,288	3,128	6,640	6,411	229	.....
XXV.—Saltpetre and other saline substances—								
1. Saltpetre	2	1	.....	.....	3	.....	3	.....
2. Other saline substances	13	3	.....	1	16	1	15	.....
XXVI.—Silk—								
1. Raw—								
(a) Foreign	.....	.....	.....	.....	.....	.....	.....	.....
(b) Indian	5	59	3	15	64	18	46	.....
2. Piece-goods—								
(a) Foreign	.....	.....	.....	.....	.....	.....	.....	.....
(b) Indian	.....	.....	.....	.....	.....	.....	.....	.....
XXVII.—Spices—								
1. Betelnuts	648	25	377	53	673	429	244	.....
2. Cardamoms	.....	.....	.....	17	.....	17	.....	17
3. Chillies	133	385	677	178	517	849	.....	332
4. Ginger	5	2	.....	1	7	1	6	.....
5. Pepper	1	.....	.....	42	1	42	.....	41
6. Others	219	543	165	296	761	461	310	.....
XXVIII.—Stone and lime	1,436	4,143	1,555	1,848	5,579	3,403	2,176	.....
XXIX.—Sugar—								
1. Refined or crystallised, including sugarcandy.	687	279	343	576	966	919	.....	53
2. Unrefined—								
(a) Sugar	.....	.....	15	.....	.....	15	..	15
(b) Gur, rab, jaggery, molasses, and other saccharine produce.	1,566	324	1,119	395	1,890	1,514	376	.....
XXX.—Tea—								
1. Foreign	 7	.....	 20	 7	 7	 27	.....	 20
2. Indian	.....	.....	.....	.....	.....	.....	.....	.....
XXXI.—Tobacco—								
1. Unmanufactured	231	215	207	106	436	313	123	.....
2. Manufactured—								
(a) Cigars	4	1	.....	2	5	2	3	.....
(b) Other sorts	27	21	16	6	48	22	27	.....
XXXII.—Wood—								
1. Timber, unwrought	1,976	3,456	1,374	2,844	5,331	3,918	1,413	.....
2. Manufactured	97	140	90	51	237	131	106	.....
XXXIII.—Wool—								
1. Raw	.....	.....	.....	.....	.....	.....	.....	.....
2. Manufactured—								
(a) Carpets and rugs	.....	1	.....	.....	1	.....	1	.....
(b) Piece-goods, European	.....	.....	.....	.....	.....	.....	.....	.....
(c) Ditto, Indian	.....	.....	.....	.....	.....	.....	.....	.....
(d) Other sorts of manufactures.	3	1	3	.....	4	3	1	.....
XXXIV.—All other articles of merchandise—								
1. Firewood	2,207	1,146	954	948	3,353	1,897	1,456	.....
2. Bamboos	1,334	420	998	335	1,754	1,318	436	.....
3. Moha	667	378	407	204	1,045	671	374	.....
4. Bones	90	448	.....	.....	541	.....	541	.....
5. Others	2,151	1,341	1,308	1,641	3,492	2,749	743	.....
Total	132,416	156,308	148,363	78,883	288,724	227,246	75,793	14,315
					Net increase		61,478	.....

A. C. MUKERJI,
for Auditor, Bengal-Nagpur Railway.

Calcutta, the 30th May 1905.

Weekly Return of Traffic Receipts on Indian Railways.

EAST INDIAN RAILWAY.

Approximate Return of Traffic for week ended 20th May 1905 on 1,962·25 miles open.

	Coaching Traffic.		Merchandise and Mineral Traffic.		Other earnings (estimated).	Total earnings.	Traffic Train-miles run.		
	No. of passengers.	Coaching Receipts.	Weight carried.	Receipts.			Coaching.	Merchandise.	Total.
		Rs. A. P. (a)	Mds. s.	Rs. A. P. (b)	Rs. A. P.	Rs. A. P.			
Total traffic for the week	429,508	3,86,006 0 0	64,50,000 0	11,27,126 0 0	30,905 0 0	15,46,039 0 0	118,667	184,482	303,149
Or per mile of railway	.....	197 11 9	.....	574 6 6	15 12 0	787 14 2	.....	...	...
For previous 19 weeks of half-year	7,884,741*	†77,37,542 0 0	12,37,76,822 0†	2,04,63,357 0 0†	6,05,047 0 0†	2,88,27,946 0 0	2,206,458§	3,398,841§	5,605,299
Total for 20 weeks ...	8,314,246	81,45,548 0 0	13,02,26,822 0	2,15,90,483 0 0	6,35,952 0 0	3,03,73,985 0 0	2,324,625	3,583,323	5,907,948
COMPARISON.									
Total for corresponding week of previous year.	426,279	4,22,332 3 3	75,94,175 10	11,96,637 9 6	37,880 9 2	16,56,900 5 11	111,948	200,385	314,333
Per mile of railway corresponding week of previous year.	.....	215 5 1	.....	618 9 8	19 9 4	856 8 1	.....	.....	.....
Total for corresponding 20th weeks of previous year.	8,654,523	83,67,042 13 8	13,10,99,033 30	2,14,18,263 14 4	6,43,029 11 2	3,04,28,276 6 2	2,226,339	3,809,330	6,167,669

(a) The decrease is chiefly due to greater movements of pilgrims in 1904.
(b) The decrease is in grain and seed traffic.
* Deducted No. of passengers 1,740 and Rs. 5,730 } On account of difference between the approximate and audited figures for the week ended
† Added Mds. 1,48,241 and deducted ,, 8,497 } 8th April 1905.
‡ Deducted ,, 1,731 }
§ Audited figures up to 8th April 1905.

1905. *Abstract of progressive weekly returns of all earnings for 1905 in comparison with 1904.*

Open mileage.	Period.	Coaching Traffic.		Merchandise and Mineral Traffic.		Other earnings.	Total.	Per mile of Railway.	Train mileage.	
		No. of passengers.	Rs.	Mds.	Rs.	Rs.	Rs.	Rs.	No.	Rate. Rs. A. P.
*1,936·87	Week ended 7th Jan. ...	373,540	3,90,660	66,67,706	11,45,386	30,547	15,64,495	809	297,843	5 4 1
*1,933·87	,, ,, 14th ,, ...	398,514	4,00,134	61,44,640	11,24,861	30,874	15,85,869	820	307,866	5 2 5
*1,932·87	,, ,, 21st ,, ...	382,101	4,07,693	69,60,444	11,86,526	34,487	16,48,906	853	309,187	5 3 4
*1,932·87	,, ,, 28th ,, ...	387,648	3,76,283	71,64,889	11,58,573	31,337	15,67,193	811	302,017	5 3 0
*1,932·87	,, ,, 4th Feb. ...	397,461	3,96,662	64,99,831	10,85,994	32,029	15,15,385	784	296,579	5 1 9
*1,932·87	,, ,, 11th ,, ...	416,257	4,33,358	57,34,068	9,76,532	32,029	14,42,013	746	241,543	5 1 11
*1,933·87	,, ,, 18th ,, ...	401,777	3,86,209	68,57,714	10,17,408	31,118	14,34,735	742	286,801	5 0 0
*1,932·87	,, ,, 25th ,, ...	404,547	4,37,153	75,81,370	11,53,050	34,763	16,21,966	839	294,820	5 8 0
*1,940·06	,, ,, 4th Mar. ...	404,314	4,01,897	67,71,735	10,55,343	33,426	15,40,066	795	283,441	5 7 4
*1,962·25	,, ,, 11th ,, ...	460,239	4,71,966	60,09,797	10,04,143	33,507	15,08,716	769	293,017	5 2 3
*1,962·25	,, ,, 18th ,, ...	437,637	4,41,117	67,36,129	11,73,576	30,761	16,45,456	839	293,157	5 10 1
*1,962·25	,, ,, 25th ,, ...	399,793	3,90,360	64,33,977	11,04,848	31,287	15,26,495	778	301,134	5 1 1
*1,962·25	,, ,, 1st April ...	409,494	4,15,671	67,83,743	10,98,393	29,755	15,43,719	787	302,951	5 1 6
*1,962·25	,, ,, 8th ,, ...	393,334	4,18,803	61,53,146	9,99,985	30,314	14,04,104	716	297,343	4 11 7
1,962·25	,, ,, 15th ,, ...	413,907	3,75,147	58,65,379	9,34,980	32,272	13,41,699	684	294,238	4 11 6
1,962·25	,, ,, 22nd ,, ...	417,353	4,04,497	63,71,078	9,70,570	34,196	14,07,063	717	283,133	4 15 6
1,962·25	,, ,, 29th ,, ...	394,691	3,54,259	67,87,065	11,32,703	32,000	15,39,142	784	248,562	5 5 4
1,962·25	,, ,, 6th May ...	403,716	3,69,243	62,99,193	11,04,167	31,808	15,05,218	767	303,790	4 15 3
1,962·25	,, ,, 13th ,, ...	418,436	3,83,435	63,32,451	10,62,724	30,903	14,76,963	752	296,043	4 15 3
1,962·25	,, ,, 20th ,, ...	429,505	3,85,906	64,50,000	11,27,126	30,905	15,46,039	788	302,549	5 1 9
	Totals up to date ...	8,314,246	81,45,542	13,02,26,822	2,15,90,483	6,35,952	3,03,73,985	779	5,907,948	5 2 3

Abstract of progressive weekly returns of all earnings for 1905 in comparison with 1904—concluded. 1904.

		No. of passengers.	Rs.	Mds.	Rs.	Rs.	Rs.	Rs.	No.	Rate. Rs. A. P.
1,934·49	First 9 days of Jan. ...	461,129	4,58,418	79,11,018	12,96,318	36,684	17,91,411	926	278,923	6 11 6
1,934·49	Week ended 16th ,, ...	413,461	3,99,314	61,02,305	9,99,400	31,730	14,30,653	740	291,020	4 14 8
1,934·49	,, ,, 23rd ,, ...	428,165	4,40,838	55,20,628	9,72,709	29,060	14,42,726	746	293,713	4 14 10
1,934·49	,, ,, 30th ,, ...	409,009	4,21,040	59,70,224	10,03,302	26,879	14,50,721	750	299,668	4 13 5
1,934·49	,, ,, 6th Feb. ...	432,192	4,33,902	66,63,147	10,54,763	29,589	15,48,213	800	305,477	5 1 1
1,934·49	,, ,, 13th ,, ...	426,570	4,15,179	63,55,900	10,06,101	30,457	14,51,737	750	290,963	4 14 3
1,934·49	,, ,, 20th ,, ...	460,236	4,44,971	65,97,325	10,54,190	31,553	15,30,714	791	304,105	5 0 6
1,934·49	,, ,, 27th ,, ...	461,547	4,49,763	66,72,951	10,35,090	29,956	15,14,809	783	273,038	4 15 5
2,934·49	,, ,, 5th Mar. ...	401,443	3,99,864	66,09,979	9,72,971	29,915	14,02,050	725	309,726	4 5 5
1,934·49	,, ,, 12th ,, ...	445,408	4,32,634	66,27,353	10,19,118	29,031	15,00,833	776	298,302	5 0 6
1,934·49	,, ,, 19th ,, ...	418,952	4,37,151	56,32,190	10,08,086	28,835	14,74,092	762	305,675	4 13 9
1,934·49	,, ,, 26th ,, ...	387,377	4,06,552	57,18,782	10,04,271	31,106	14,43,949	746	299,632	4 13 1
1,934·49	,, ,, 2nd April	346,851	3,91,326	65,10,466	10,15,231	28,245	14,35,464	742	308,084	4 10 5
1,934·49	,, ,, 9th ,, ...	384,448	3,94,197	64,20,748	10,40,670	30,561	14,55,448	752	306,968	4 11 10
1,934·49	,, ,, 16th ,, ...	397,904	3,96,456	67,08,830	11,01,655	35,849	15,33,959	777	310,105	4 15 7
1,934·49	,, ,, 23rd ,, ...	446,131	4,13,877	66,77,960	11,48,230	35,644	15,97,751	826	303,613	5 4 3
1,934·49	,, ,, 30th ,, ...	449,755	4,11,879	60,85,016	11,44,954	36,296	15,93,869	823	317,471	5 0 3
1,934·49	,, ,, 7th May ...	501,079	4,16,306	68,98,462	11,48,513	37,265	16,17,185	836	317,510	5 4 3
1,934·49	,, ,, 14th ,, ...	487,107	3,99,753	69,61,514	11,19,771	37,757	15,57,281	811	314,057	5 0 10
1,934·49	,, ,, 21st ,, ...	434,279	4,23,342	75,94,175	11,96,488	37,880	16,56,900	857	312,335	5 4 11
	Totals up to date ...	8,654,523	83,67 043	13,10,99,033	2,14,18,204	6,43,029	3,04,28,276	775	6,167,669	5 14 11

* Audited figures.

TARKESSUR BRANCH RAILWAY.

Approximate Return of Traffic for week ended 20th May 1905 on 22·23 miles open.

	Coaching Traffic.		Merchandise and Mineral Traffic.		Other earnings (estimated).	Total earnings.	Traffic Train-miles run.		
	No. of passengers.	Coaching receipts.	Weight carried.	Receipts.			Coaching.	Merchandise.	Total.
		Rs. A. P.	Mds. s.	Rs. A. P.	Rs. A. P.	Rs. A. P.			
Total traffic for the week ...	21,764	5,346 0 0	14,557 0	576 0 0	6 0 0	5,930 0 0	963	225	1,188
Average per mile of railway ...	.....	235 15 10	.....	26 0 0	0 4 4	262 4 2	.....	.....	.....
Total for previous 19 weeks of half-year	491,155*	1,24,617 0 0*	3,77,137 0†	14,422 0 0†	156 0 0‡	1,39,195 0 0	19,179§	4,284§	23,464
Total for 20 weeks ...	512,919	1,29,963 0 0	3,91,694 0	15,000 0 0	162 0 0	1,45,025 0 0	20,142	4,510	24,652
Comparison.									
Total for corresponding week of previous year.	20,953	5,125 9 5	16,633 20	641 1 0	0 14 6	5,767 8 11	1,036	102	1,138
Average per mile of railway corresponding week of previous year.	.....	230§ 9 2	.....	28 13 4	0 0 8	259 7 2	.....	.....	.....
Total for corresponding 20§ weeks of previous year.	543,109	1,39,253 15 9	4,73,696 0	16,790 7 0	166 10 9	1,56,210 1 6	21,539	3,233	24,772

* Deducted No. of passengers 925 and Rs. 247 } On account of difference between the approximate and audited figures for the week ended 8th
† Added Mds. 4,276 and deducted ,, 105 } April 1905.
‡ Do ,, 9 }
§ Audited figures up to 8th April 1905.

Abstract of progressive weekly returns of all earnings for 1905 in comparison with 1904.

Open mileage.	Period.	Coaching Traffic.		Merchandise and Mineral Traffic.		Other earnings.	Total.	Per mile of railway.	Train mileage.	
		No. of passengers.	Rs.	Mds.	Rs.	Rs.	Rs.	Rs.	No.	Rate. Rs. A. P.
*22·23	Week ended 7th Jan.	20,710	4,785	21,896	805	6	5,597	253	1,188	4 15 5
*22·23	,, ,, 14th ,, ...	21,962	4,981	18,783	692	4	5,537	249	1,188	4 10 7
*22·23	,, ,, 21st ,, ...	23,881	5,248	23,086	844	6	6,138	276	1,188	5 2 8
*22·23	,, ,, 28th ,, ...	21,754	4,994	19,716	726	7	5,727	258	1,188	4 14 7
*22·23	,, ,, 4th Feb. ...	20,042	4,689	18,613	538	11	5,251	236	1,188	4 6 9
*22·23	,, ,, 11th ,, ...	21,317	5,152	20,771	837	11	6,000	270	1,188	5 0 10
*22·23	,, ,, 18th ,, ...	19,637	4,820	18,349	633	6	5,459	246	1,189	4 9 6
*22·23	,, ,, 25th ,, ...	26,104	6,345	30,704	1,039	6	7,420	334	1,188	6 4 1
*22·23	,, ,, 4th Mar. ...	37,973	10,642	30,520	1,208	15	11,865	534	1,343	8 13 6
*22·23	,, ,, 11th ,, ...	30,179	7,718	19,340	779	7	8,504	383	1,427	5 15 4
*22·23	,, ,, 18th ,, ...	23,841	6,039	20,130	888	7	6,934	312	1,186	5 13 5
*22·23	,, ,, 25th ,, ...	25,983	6,308	16,229	619	7	6,934	312	1,188	5 13 7
*22·23	,, ,, 1st April ...	24,302	5,901	20,505	779	8	6,679	300	1,230	5 6 10
*22·23	,, ,, 8th ,, ...	31,912	8,894	20,326	807	17	9,718	437	1,186	8 3 1
22·23	,, ,, 15th ,, ...	30,234	15,826	12,689	562	9	16,097	724	1,672	9 10 9
22·23	,, ,, 22nd ,, ...	23,339	5,943	18,483	730	8	6,681	301	1,188	5 10 9
22·23	,, ,, 29th ,, ...	23,566	5,574	18,568	791	7	6,372	283	1,188	5 4 10
22·23	,, ,, 6th May ...	23,247	5,618	23,857	812	8	6,438	290	1,188	5 6 8
22·23	,, ,, 13th ,, ...	28,911	5,430	10,723	485	6	5,914	266	1,188	4 15 5
22·23	,, ,, 20th ,, ...	21,764	5,346	14,557	576	6	5,930	263	1,188	4 14 6
	Totals up to date ...	512,919	1,29,963	3,91,694	15,000	162	1,45,025	326	24,651	5 14 2

Abstract of progressive weekly returns of all earnings for 1905 in comparison with 1904—concluded. *1904.*

		No. of passengers.	Rs.	Mds.	Rs.	Rs.	Rs.	Rs.	No.	Rate. Rs. A. P.
22·23	First 9 days of Jan. ...	25,125	6,268	25,289	1,008	14	7,290	348	1,540	4 11 8
22·23	Week ended 16th ,, ...	19,705	4,483	17,986	582	9	5,074	228	1,188	4 4 4
22·23	,, ,, 23rd ,, ...	21,845	5,239	18,703	702	8	5,939	267	1,188	5 0 0
22·23	,, ,, 30th ,, ...	24,180	5,834	23,832	768	1	6,613	297	1,188	5 9 1
22·23	,, ,, 6th Feb. ...	28,038	7,082	25,796	794	3	7,879	354	1,188	6 10 1
22·23	,, ,, 13th ,, ...	25,680	6,151	20,372	659	6	6,816	306	1,282	5 8 6
22·23	,, ,, 20th ,, ...	39,816	10,661	28,809	733	4	11,397	513	1,496	7 9 11
22·23	,, ,, 27th ,, ...	25,598	6,146	24,789	805	10	7,052	317	1,188	5 15 0
22·23	,, ,, 6th Mar. ...	23,009	6,731	19,187	684	6	7,411	333	1,188	6 3 10
22·23	,, ,, 13th ,, ...	24,231	5,986	27,319	963	7	6,956	313	1,189	5 13 5
22·23	,, ,, 20th ,, ...	25,433	6,283	26,080	1,042	11	7,336	330	1,188	6 2 9
22·23	,, ,, 27th ,, ...	22,165	5,499	19,643	774	15	6,379	272	1,188	5 4 7
22·23	,, ,, 3rd April ...	25,594	6,336	26,084	1,078	9	7,423	334	1,144	6 7 10
22·23	,, ,, 9th ,, ...	39,670	11,781	30,994	1,133	10	12,924	580	1,234	10 7 4
22·23	,, ,, 16th ,, ...	48,269	14,351	21,814	767	16	15,134	680	1,496	10 1 9
22·23	,, ,, 23rd ,, ...	24,197	6,023	23,097	856	12	6,871	309	1,188	5 12 6
22·23	,, ,, 30th ,, ...	26,740	6,785	24,499	903	4	7,753	349	1,188	6 8 5
22·23	,, ,, 7th May ...	25,960	6,466	25,063	833	16	7,315	329	1,188	6 2 6
22·23	,, ,, 14th ,, ...	33,177	6,091	34,246	930	5	7,026	316	1,188	5 14 6
22·23	,, ,, 21st ,, ...	20,953	5,124	16,623	641	1	5,768	259	1,188	4 13 8
	Totals up to date ...	543,109	1,39,253	4,73,696	16,790	167	1,56,210	346	24,772	6 4 11

* Audited figures.

DELHI-UMBALLA-KALKA RAILWAY.

Approximate Return of Traffic for week ended 20th May 1905 on 162·36 miles open.

	Coaching Traffic.		Merchandise and Mineral Traffic.		Other earnings (estimated).	Total earnings.	Traffic Train-miles run.		
	No. of passengers.	Coaching receipts.	Weight carried.	Receipts.			Coaching.	Merchandise.	Total.
		Rs. A. P.	Mds. S.	Rs. A. P.	Rs. A. P.	Rs. A. P.			
Total traffic for the week	23,474	19,685 0 0	2,02,469 0	17,206 0 0	73 0 0	37,034 0 0	8,777	3,969	12,746
Or per mile of railway ...	.....	121 1 11	.....	106 8 6	0 7 2	228 1 7	.....	.....	.....
For previous 19 weeks of half-year	460,029*	3,91,687 0 0*	36,88,491 0†	2,91,963 0 0†	1,706 0 0‡	6,85,356 0 0	173,971§	75,332§	249,303
Total for 20 weeks ...	483,503	4,11,352 0 0	38,90,960 0	3,09,259 0 0	1,779 0 0	7,22,390 0 0	181,748	79,671	261,419
COMPARISON.									
Total for corresponding week of previous year.	25,414	26,600 11 10	1,53,083 20	13,237 11 0	72 8 6	39,960 15 4	9,906	4,204	14,110
Per mile of railway corresponding week of previous year.	.....	163 13 5	.....	81 13 5	0 7 2	246 2 0	.....	.....	.....
Total for corresponding 20½ weeks of previous year.	521,948	4,43,908 9 3	36,41,564 30	2,89,085 11 6	1,244 1 9	7,04,238 6 6	199,588	74,783	274,371

* Added No. of passengers 140 and Rs. 383
† Do. Mds. 22,484 ,, ,, 781
‡ Do. ,, 14
} On account of difference between the approximate and audited figures for the week ended 1[illegible] April 1905.
§ Audited figures up to 8th April 1905.

1905. *Abstract of progressive weekly returns of all earnings for 1905 in comparison with 1904.*

Open mileage.	Period.	Coaching Traffic.		Merchandise and Mineral Traffic.		Other earnings.	Total.	Per mile of railway.	Train mileage.	
		No. of passengers.	Rs.	Mds.	Rs.	Rs.	Rs.	Rs.	No.	Rate. Rs. A. P.
*162·36	Week ended 7th Jan. ...	21,303	18,631	2,37,419	11,933	91	30,645	189	12,902	2 6 0
*162·36	,, ,, 14th ,, ...	21,376	18,885	1,18,985	13,506	107	32,498	200	13,023	2 7 0
*162·36	,, ,, 21st ,, ...	20,051	15,773	1,32,369	13,546	108	29,426	181	13,513	2 3 10
*162·36	,, ,, 28th ,, ...	22,039	17,068	1,66,407	17,714	115	34,897	215	13,263	2 10 1
*162·36	,, ,, 4th Feb. ...	21,482	16,986	1,07,182	11,313	79	27,378	168	13,731	2 1 1
*162·36	,, ,, 11th ,, ...	21,331	17,440	1,74,378	17,841	114	35,104	216	13,820	2 11 10
*162·36	,, ,, 18th ,, ...	22,535	16,262	1,37,412	16,071	119	32,052	204	13,241	2 7 11
*162·36	,, ,, 25th ,, ...	26,876	20,440	2,00,289	23,124	114	43,678	263	12,716	3 5 5
*162·36	,, ,, 4th Mar. ...	26,858	19,781	2,33,441	15,119	58	34,958	215	12,996	2 11 9
*162·36	,, ,, 11th ,, ...	27,230	24,458	1,97,031	15,120	61	39,639	244	13,117	3 0 6
*162·36	,, ,, 18th ,, ...	25,093	24,525	1,97,096	17,477	75	42,077	259	13,581	3 5 5
*162·36	,, ,, 25th ,, ...	24, 92	22,435	2,65,014	16,651	85	39,171	241	13,780	2 13 1
*162·36	,, ,, 1st April ...	30,522	29,220	4,02,274	20,330	76	49,626	306	14,717	3 5 11
162·36	,, ,, 8th ,, ...	30,386	27,084	1,53,204	16,254	111	44,349	273	14,137	3 2 3
162·36	,, ,, 15th ,, ...	25,884	23,436	1,50,006	13,876	93	38,404	224	13,943	2 13 0
162·36	,, ,, 22nd ,, ...	24,860	21,734	1,17,902	13,758	86	35,568	219	13,253	2 14 6
162·36	,, ,, 29th ,, ...	22,549	19,719	1,79,031	12,809	75	32,603	200	13,239	2 10 6
162·36	,, ,, 6th May ...	22,893	19,319	1,36,276	13,674	67	33,060	204	13,586	2 9 6
162·36	,, ,, 13th ,, ...	22,696	18,803	1,67,331	13,853	75	32,529	200	13,916	2 9 3
162·36	,, ,, 20th ,, ...	23,474	19,685	2,02,469	17,206	75	37,034	228	13,766	2 14 5
	Totals up to date ..	483,503	4,11,352	38,90,960	3,09,259	1,779	7,22,390	223	261,619	2 12 1

Abstract of progressive weekly returns of all earnings for 1905 in comparison with 1904—concluded. 1904

		No. of passengers.	Rs.	Mds.	Rs.	Rs.	Rs.	Rs.	No.	Rate. Rs. A. P.
162·36	First 9 days of Jan. ...	24,246	22,472	1,04,228	12,583	53	35,078	216	16,546	2 1 11
162·36	Week ended 16th ,, ...	18,106	13,980	97,997	12,697	31	26,708	165	13,769	2 1 6
162·36	,, ,, 23rd ,, ...	18,210	14,767	1,03,833	11,457	44	26,268	162	13,924	2 0 6
162·36	,, ,, 30th ,, ...	20,113	16,196	2,06,450	16,841	29	34,066	210	13,068	2 9 9
162·36	,, ,, 6th Feb. ...	20,613	15,244	1,53,104	12,685	31	27,960	173	13,033	2 5 1
162·36	,, ,, 13th ,, ...	20,810	17,050	1,61,117	13,811	59	30,920	184	13,346	2 3 10
162·36	,, ,, 20th ,, ...	21,556	19,050	1,49,693	13,216	62	31,328	193	13,747	2 7 4
162·36	,, ,, 27th ,, ...	22,343	19,667	1,36,996	15,096	43	34,806	214	13,865	2 11 8
162·36	,, ,, 5th Mar. ...	23,770	20,353	1,35,894	10,996	61	31,357	193	13,180	2 6 1
162·36	,, ,, 13th ,, ...	20,891	23,169	96,546	10,403	54	33,625	207	14,430	2 6 3
162·36	,, ,, 19th ,, ...	76,887	45,411	87,049	11,913	133	57,455	354	17,890	3 4 10
162·36	,, ,, 26th ,, ...	36,077	27,834	1,35,050	15,247	101	43,082	266	18,148	2 15 9
162·36	,, ,, 2nd April ...	25,726	26,822	1,71,633	17,010	76	43,908	270	13,743	3 3 1
162·36	,, ,, 9th ,, ...	24,112	25,160	1,01,971	13,568	77	37,815	233	13,899	2 11 6
162·36	,, ,, 16th ,, ...	20,630	23,479	99,813	13,581	60	36,120	216	13,493	2 9 8
162·36	,, ,, 23rd ,, ...	23,174	21,752	1,17,958	13,828	58	35,638	220	13,415	2 10 6
162·36	,, ,, 30th ,, ...	25,303	21,849	1,20,625	13,358	72	35,276	217	13,719	2 9 2
162·36	,, ,, 7th May ...	23,226	21,566	1,54,413	11,100	67	32,733	200	13,994	2 7 11
162·36	,, ,, 14th ,, ...	25,619	21,097	1,10,319	17,696	53	38,765	302	13,553	2 9 9
162·36	,, ,, 21st ,, ...	25,614	26,601	1,53,084	13,298	72	39,961	245	14,110	2 13 6
	Totals up to date ...	521,948	4,43,908	26,41,565	2,89,085	1,244	7,04,238	214	274,371	2 9 1

* Audited figures.

SOUTH BEHAR RAILWAY.

Approximate Return of Traffic for week ended 20th May 1905 on 78·76 miles open.

	Coaching Traffic.		Merchandise and Mineral Traffic.		Other earnings (estimated).	Total earnings.	Traffic train-miles run.		
	Number of passengers.	Coaching receipts.	Weight carried.	Receipts.			Coaching.	Merchandise.	Total
		Rs. A. P.	Mds. s.	Rs. A. P.	Rs. A. P.	Rs. A. P.			
al traffic for the week	14,214	6,449 0 0	50,050 0	3,650 0 0	43 0 0	10,141 0 0	1,926	1,378	3,304
per mile of railway		81 14 1	.....	46 5 6	0 8 7	128 12 2	.....	.....	.....
previous 19 weeks of half-year	270,231*	1,33,088 0 0*	11,65,458 0†	68,286 0 0†	773 0 0‡	2,02,147 0 0	33,012§	27,613§	60,625
Total for 20 weeks ...	284,445	1,39,537 0 0	12,15,488 0	71,936 0 0	815 0 0	2,12,288 0 0	34,940	28,991	63,931
COMPARISON.									
tal for corresponding week of previous year.	13,896	6,379 3 10	3,66,551 30	8,378 14 0	22 4 9	14,780 6 7	1,926	1,028	2,914
r mile of railway correspond- ing week of previous year.	.....	80 15 11	.....	106 6 2	0 4 6	187 10 7	.....	.....	.....
tal for corresponding 20½ weeks f previous year.	279,045	1,35,653 2 2	18,85,903 0	1,00,774 8 0	711 7 3	2,37,139 1 5	33,275	24,065	57,340

* Added No. of passengers 2,165 and Rs. 964 } On account of difference between the approximate and audited figures for the week ended
† Do. Mds. 66,569 and ,, 1,960 } 6th April 1905.
‡ Do. ,, 18 }
§ Audited figures up to 6th April 1905.

1905. *Abstract of progressive weekly returns of all earnings for 1905 in comparison with 1904.*

Open mileage.	Period.	Coaching Traffic.		Merchandise and Mineral Traffic.		Other earnings.	Total.	Per mile of railway.	Train mileage.	
		No. of Passengers.	Rs.	Mds.	Rs.	Rs.	Rs.	Rs.	No.	Rate. Rs. A. P.
*78·76	Week ended 7th Jan. ...	14,187	6,966	55,900	2,649	24	9,639	122	3,471	2 12 6
*78·76	,, ,, 14th ,, ...	12,404	5,946	62,919	3,823	33	9,802	124	3,306	2 15 5
*78·76	,, ,, 21st ,, ...	12,226	6,123	38,437	2,850	23	8,996	114	3,306	2 11 6
*78·76	,, ,, 28th ,, ...	12,209	6,080	36,307	2,835	25	8,940	114	3,247	2 12 4
*78·76	,, ,, 4th Feb. ...	12,442	6,170	43,046	3,864	35	10,067	128	3,415	2 15 2
*78·76	,, ,, 11th ,, ...	12,799	6,498	61,884	3,007	33	9,538	121	3,768	2 8 6
*78·76	,, ,, 18th ,, ...	13,633	8,449	66,634	3,301	50	11,800	150	3,287	3 9 5
*78·76	,, ,, 25th ,, ...	16,050	8,427	63,824	3,539	50	12,016	153	3,099	3 14 9
*78·76	,, ,, 4th March ...	17,078	8,434	61,070	3,339	49	11,822	150	2,304	5 8 11
*78·76	,, ,, 11th ,, ...	15,872	7,318	52,108	3,343	53	10,713	136	3,149	3 6 5
*78·76	,, ,, 18th ,, ...	13,687	7,431	44,127	3,126	41	10,608	135	2,887	3 10 9
*78·76	,, ,, 25th ,, ...	15,214	8,006	61,309	4,335	33	12,374	157	2,939	4 3 3
*78·76	,, ,, 1st April ...	16,194	8,405	50,389	3,619	45	11,869	148	3,277	3 9 0
*78·76	,, ,, 8th ,, ...	15,265	7,465	1,27,310	5,364	54	12,903	164	3,537	3 10 4
78·76	,, ,, 15th ,, ...	14,883	6,935	64,089	3,345	44	10,344	131	3,030	3 6 7
78·76	,, ,, 22nd ,, ...	13,293	5,702	63,663	3,787	49	9,538	121	3,010	3 3 2
78·76	,, ,, 29th ,, ...	12,781	6,224	78,067	4,856	47	11,107	141	2,958	3 12 2
78·76	,, ,, 6th May ...	14,330	6,844	61,866	3,990	48	10,881	138	3,366	3 1 1
78·76	,, ,, 13th ,, ...	14,681	6,512	48,679	3,337	42	9,891	126	3,306	2 15 10
78·76	,, ,, 20th ,, ...	14,214	6,449	50,050	3,650	43	10,141	129	3,306	3 1 1
	Totals up to date ...	284,445	1,39,537	12,15,488	71,936	815	2,12,288	135	63,931	3 5 2

Abstract of progressive weekly returns of all earnings for 1905 in comparison with 1904—concluded. *1904.*

		No. of Passengers.	Rs.	Mds.	Rs.	Rs.	Rs.	Rs.	No.	Rate. Rs. A. P.
78·76	First 9 days of Jan. ...	15,523	7,103	82,119	4,692	36	11,831	150	3,290	3 9 6
78·76	Week ended 16th ,, ...	11,536	5,312	44,913	3,637	24	8,973	114	2,368	3 12 9
78·76	,, ,, 23rd ,, ...	13,406	6,359	94,637	4,283	17	11,159	142	2,689	4 4 3
78·76	,, ,, 30th ,, ...	13,314	6,249	56,738	4,101	28	10,378	133	2,756	3 12 3
78·76	,, ,, 6th Feb ...	12,662	6,538	59,901	4,149	35	10,712	136	2,931	3 10 4
78·76	,, ,, 13th ,, ...	13,963	6,915	60,522	4,119	24	11,058	140	2,756	4 0 2
78·76	,, ,, 20th ,, ...	14,432	7,877	1,15,051	3,831	27	11,735	149	2,923	3 14 9
78·76	,, ,, 27th ,, ...	13,874	7,338	85,498	4,173	44	11,755	149	2,676	4 6 3
78·76	,, ,, 5th March ...	13,104	7,238	69,638	4,081	70	11,389	144	2,992	3 13 10
78·76	,, ,, 12th ,, ...	15,093	7,541	1,57,237	7,136	50	14,717	187	3,230	4 8 11
78·76	,, ,, 19th ,, ...	14,054	7,080	94,571	5,181	43	12,273	156	3,187	3 14 2
78·76	,, ,, 26th ,, ...	12,442	6,313	1,03,182	5,776	27	12,116	154	2,856	4 4 5
78·76	,, ,, 2nd April ...	11,488	5,653	73,774	5,161	31	10,745	136	2,853	3 12 8
78·76	,, ,, 9th ,, ...	12,653	5,812	85,599	6,035	53	12,780	162	2,853	4 8 2
78·76	,, ,, 16th ,, ...	14,098	6,173	87,502	6,090	47	12,310	156	2,914	4 4 2
78·76	,, ,, 23rd ,, ...	14,472	6,312	69,931	4,284	33	10,629	135	2,677	3 15 6
78·76	,, ,, 30th ,, ...	15,012	6,734	80,274	5,499	39	12,472	158	3,180	3 15 4
78·76	,, ,, 7th May ...	13,469	9,277	63,300	4,541	60	13,918	177	2,760	5 0 8
78·76	,, ,, 14th ,, ...	15,556	6,880	54,647	4,516	33	11,429	145	2,677	4 4 4
78·76	,, ,, 21st ,, ...	13,896	6,379	3,66,552	8,379	22	14,780	188	2,914	5 1 2
	Totals up to date	279,045	1,35,653	18,85,903	1,00,774	713	2,37,139	148	57,340	4 2 2

* Audited figures.

BENGAL CENTRAL RAILWAY COMPANY, LIMITED.

Approximate Return of Traffic and Mileage for the week ended 20th May 1905 on 139 miles open.

	Coaching Traffic.		Merchandise and Mineral Traffic.		Other earnings.	Total earnings.	Traffic Train-miles run.		
	Number of passengers.	Coaching receipts.	Weight carried.	Receipts.			Coaching.	Merchandise.	Total
		Rs. A. P.	Mds. s.	Rs. A. P.	Rs. A. P.	Rs. A. P.			
Total traffic for the week ...	34,924	13,667 0 0	66,766 0	5,083 0 0	169 0 0	18,889 0 0	4,074	3,312	
Or per mile of railway ..	251	105 0 0†	480 0	37 0 0	1 0 0	143 0 0	.....	...	
For previous 19 weeks of half-year*	772,209	3,03,192 0 0	14,25,750 0	1,10,913 0 0	64,337 0 0	4,78,472 0 0	88,176	53,930	
Total for 20 weeks	807,133	3,16,779 0 0	15,02,525 0	1,16,026 0 0	64,506 0 0	4,97,311 0 0	92,250	57,242	
COMPARISON.									
Total for corresponding week of previous year .	33,187	13,606 0 0	74,003 0	5,281 0 0	209 0 0	19,336 0 0	4,820	2,306	
Per mile of railway corresponding week of previous year ..	255	107 0 0†	532 0	38 0 0	2 0 0	147 0 0	.....	.....	
Total to corresponding date of previous year . ..	809,854	3,17,682 0 0	19,17,190 0	1,37,023 0 0	51,075 0 0	5,05,780 0 0	97,937	51,891	

* Audited up to week ended 1st April 1905.
† Coaching traffic calculated on 130 miles only.

BENGAL AND NORTH-WESTERN RAILWAY.

Approximate Return of Traffic for the week ending 20th May 1905 on 1,467 miles open.

	Coaching Traffic.		Merchandise and Mineral Traffic.		Other earnings (estimated), including steam-boat.	Total earnings.	Traffic Train-miles run.		
	Number of passengers.	Receipts.	Weight carried.	Receipts.			Coaching.	Merchandise.	Total
		Rs.	Mds.	Rs.	Rs.	Rs.			
Total traffic for the week on 1,467 miles open	(a)270,900	1,10,923	11,35,780	(b)1,49,050	(c)29,840	2,80,710	41,618	(d)43,661	
Or per mile of railway	190·80	75 54	773·79	101·60	14·21	191·35	.....	.....	
For previous 19 weeks of half-year (e)	4,729,586	19,70,182	1,93,86,740	25,38,910	3,99,990	49,08,982	806,489	814,614	
Total for 20 weeks ..	5,000,486	20,81,005	2,11,22,100	26,87,960	4,29,730	51,89,092	848,107	857,275	
COMPARISON.									
Total for corresponding week of previous year on 1,388 miles open	263,856	1,10,008	12,06,006	1,88,516	31,021	3,36,745	42,279	(f)46,327	
Per mile of railway corresponding week of previous year	190 11	79·91	911·38	136·03	22·36	233·20	... .		
Total to corresponding date of previous year	4,926,457	22,13,795	2,10,47,033	28,00,306	4,74,804	54,88,905	816,687	809,253	

(a) Increase in numbers is due to increased local traffic with shorter lead.
(b) Decrease mainly under foreign outward, due to dull markets, partly compensated for by brisker local movements.
(c) Decrease chiefly under steam-boats due to reduced foreign outward traffic referred to above.
(d) Includes 6,355 miles of ballast trains.
(e) Ditto audited figures up to week ending 8th April 1905.
(f) Ditto 5,802 miles of ballast trains.

BENGAL AND NORTH-WESTERN RAILWAY.

Approximate Return of Traffic for the week ending 27th May 1905 on 1,467 miles open.

	Coaching Traffic.		Merchandise and Mineral Traffic.		Other earnings (estimated), including steam-boat.	Total earnings.	Traffic Train-miles run.		
	No. of passengers.	Receipts.	Weight carried.	Receipts.			Coaching	Merchandise.	Total
		Rs	Mds.	Rs.	Rs.	Rs.			
Total traffic for the week on 1,467 miles open	288,200	(a) 1,18,060	10,98,890	(b) 1,44,190	(c) 32,970	2,95,220	41,755	(d) 43,881	
Or per mile of railway	263·27	80·47	74·93	98·29	15·86	194·43	.....	... ..	
For previous 20 weeks of half-year (e)	4,995,787	20,83,673	2,11,33,825	26,84,829	4,19,617	51,88,319	848,535	865,459	
Total for 21 weeks ...	5,283,987	22,01,733	2,22,32,715	28,29,019	4,52,587	54,73,539	890,293	909,343	
COMPARISON.									
Total for corresponding week of previous year on 1,388 miles open	267,924	1,02,347	13,41,916	1,93,029	36,890	3,34,266	40,819	(f) 47,906	
Per mile of railway corresponding week of previous year	193·09	73·74	966·79	138·35	23·04	234·13	.....	.....	
Total to corresponding date of previous year	5,204,241	23,16,142	2,33,88,943	29,93,335	5,05,394	58,13,871	889,816	751,189	

(a) Increase mainly under local and foreign outward, principally due to Bahraich *mela* and marriage parties.
(b) Decrease chiefly under foreign outward, due to dull markets; local movements still continue brisk.
(c) Decrease principally under steam-boats, due to reduced foreign outward traffic referred to above.
(d) Includes 6,258 miles of ballast trains.
(e) Includes audited figures up to week ending 15th April 1905.
(f) Includes 5,461 miles of ballast trains.

ASSAM-BENGAL RAILWAY.

Approximate Return of traffic for the week ended 20th May 1905 on 737 miles open for all descriptions of traffic, and an additional 3 miles for goods traffic only.

	Coaching Traffic.		Merchandise and Mineral Traffic.		Other earnings (estimated), including steam-boat.	Total earnings.	Traffic Train-miles run.		
	No. of passengers.	Coaching receipts.	Weight carried.	Receipts.			Coaching.	Merchandise.	Total.
		Rs. A. P.	Mds. s.	Rs. A. P.	Rs. A. P.	Rs. A. P.			
Total traffic for the week ...	46,137	25,327 0 0	1,20,333 0	21,137 0 0	1,430 0 0	47,894 0 0	10,683	13,603	24,286
per mile of railway ...	62·60	34·36	163·61	28·56	1·93	64·85	14·50	18·88	32·88
Per previous 19 weeks of half-year ...	910,557	6,09,705 0 0	31,93,523 0	4,67,827 0 0	51,175 0 0	11,28,707 0 0	200,835	283,697	484,532
Total for 20 weeks ...	956,694	6,35,032 0 0	33,13,856 0	4,88,964 0 0	52,605 0 0	11,76,601 0 0	211,518	297,300	508,818
Comparison.									
Total for corresponding week of previous year ...	39,568	22,658 0 0	72,429 0	11,992 0 0	3,353 0 0	38,003 0 0	7,792	7,032	14,824
Per mile of railway corresponding week of previous year ...	53·69	30·74	97·88	16·20	4·83	51·47	10·57	9·50	20·07
Total to corresponding date of previous year ...	887,389	5,67,961 0 0	26,59,022 0	3,94,061 0 0	83,327 0 0	10,15,349 0 0	175,305	210,854	386,159

FINANCIAL YEAR.

Approximate Statement of Gross Receipts of the Assam-Bengal Railway.

Receipts for week ending 20th May 1905.			Receipts for week ending 21st May 1904.			Total receipts from 1st April 1905 to 20th May 1905.			Total receipts from 1st April 1904 to 21st May 1904.			Total increase in 1905.	Total decrease in 1905.
Mean mileage worked.	Receipts.	Per mile worked.	Mean mileage worked.	Receipts.	Per mile worked.	Mean mileage worked.	Total receipts.	Per mile worked per week.	Mean mileage worked.	Total receipts.	Per mile worked per week.		
	Rs.	Rs.		Rs.	Rs.		Rs.			Rs.		Rs.	
740	47,894	64·85	740	38,003	51·47	740	3,95,893	...	740	2,91,648	...	1,04,245	.....

DARJEELING-HIMALAYAN RAILWAY COMPANY, LIMITED.

		Rs. A. P.	Rs. A. P.
Approximate earnings for the week ending 27th May 1905 ...	Coaching ...	8,860 0 0	23,084 0 0
	Goods ...	14,170 0 0	
	Other earnings ...	54 0 0	
Audited earnings for the corresponding period of 1904 ...	Coaching ...	8,260 0 0	22,354 0 0
	Goods ...	13,716 0 0	
	Other earnings ...	378 0 0	
	Increase ...		730 0 0
Receipts per mile for the week ending 27th May 1905 ...	...	...	452 10 0
Ditto for the corresponding period of 1904 ...	...	...	438 5 0
	Increase ...		14 5 0
Receipts from 1st January to 27th May 1905 ...	...	...	3,62,750 0 0
Ditto for the corresponding period of 1904 ...	...	...	4,10,430 0 0
	Decrease ...		47,680 0 0

Printed at the Printing Office, and published by the Book Depôt, of the Bengal Secretariat, Writers' Buildings, in the City of Calcutta, on 7th June 1905.

REGISTERED No. C209.)

No. 24 of 1905.

The Calcutta Gazette.

WEDNESDAY, JUNE 14, 1905.

CONTENTS.

	Page
PART I.—Orders and Notifications by the Lieutenant-Governor of Bengal, the High Court, Government Treasury, etc.	1077—1110
PART IA.—Orders and Notifications by the Government of India	107—108
PART IB.—Orders by the Lieutenant-Governor of Bengal	91—92
PART II.—Advertisements	731—762
PART III.—Acts of the Bengal Council	Nil
PART IV.—Bills of the Bengal Council	Nil
PART IVA.—Proceedings of the Bengal Legislative Council	Nil
PART V.—Acts of the Governor-General's Council assented to by the Governor-General	Nil
PART VI.—Bills introduced into the Council of the Governor-General for making Laws and Regulations or published under Rule 23	VII
APPENDIX.—Marine Notifications	187—195
SUPPLEMENT No. 24:—	
Resolution on the Triennial Report on the Administration of the Registration Department in Bengal for the years 1902, 1903, and 1904	863—867
Liberality of Raja Janoki Ballav Sen, of Dimla, in the district of Rangpur	868
Statistical Return of Crops, Average wholesale, Prices-current, Circular and Eastern Canals, Results of Meteorological Observations, Vital Statistics, Railway Traffic Receipts, &c., &c.	869—895

PART I.

Orders and Notifications by the Lieutenant-Governor of Bengal, the High Court, Government Treasury, &c.

ORDERS BY THE LIEUT.-GOVERNOR OF BENGAL.

No. 2919A.

APPOINTMENTS AND TRANSFERS.

GENERAL.—*No. 1476A.D.—The 7th June 1905.*—Babu Probodh Chandra Chatterji, Deputy Magistrate and Deputy Collector, on leave, is posted to the head-quarters station of the Bhagalpur district.

Bhagalpur.

No. 1504A.D.—The 9th June 1905.—Mr. G. Milne, Assistant Magistrate and Collector, is appointed to have charge of the Sadar subdivision of the Howrah district, on being relieved of his present appointment as Officiating Magistrate and Collector of Shahabad.

Shahabad. Howrah.

No. 1506A.D.—The 9th June 1905.—Mr. W. A. Marr, substantive *pro tempore* Joint-Magistrate and Deputy Collector, on leave, is appointed to act, until further orders, as Magistrate and Collector of the Shahabad district.

Shahabad.

No. 1581A.D.—The 10th June 1905.—Mr. C. G. H. Allen, Magistrate and Collector, on leave, is appointed to act as Chairman of the Corporation of Calcutta, during the absence, on leave, of the Hon'ble Mr. R. T. Greer, C.S.I., or until further orders, with effect from the date on which he joins the appointment.

Calcutta.

No. 1575A.D.—The 13th June 1905.—Mr. Brajendra Nath Dé, Magistrate and Collector of Hooghly, is appointed to act as Commissioner of the Burdwan Division, in addition to his own duties, during the absence, on leave, of Mr. E. H. C. Walsh, or until further orders.

Hooghly. Burdwan Divn.

EDUCATION.—*No. 1464A.D.—The 7th June 1905.*—Miss Ethel Naomi Sarah Brace is appointed to be Assistant Head Mistress, Dow Hill Girls' School, Kurseong, and is appointed substantively *pro tempore* to class VIII of the Provincial Educational Service.

Darjeeling.

No. 1489A.D.—The 8th June 1905.—Dr. W. Booth, of the Indian Educational Service, is appointed to act as Inspector of Schools, Rajshahi Division, during the absence, on leave, of Mr. C. W. Peake, or until further orders.

Rajshahi Divn.

No. 1548A.D.—The 10th June 1905.—Mr. Frank William Arnold is appointed, with the sanction of His Majesty's Secretary of State for India, to be Head Master of the Dacca School of Engineering, with effect from the 16th May 1905.

Dacca.

ECCLESIASTICAL.—*No. 1564A.D.—The 12th June 1905.*—The Revd. T. E. F. Cole, a Chaplain on the Bengal (Calcutta) Ecclesiastical establishment, is appointed to be Chaplain of the Garrison of Fort William and the Military Hospital, Calcutta, with effect from the 12th June 1905.

Calcutta.

LEAVE.

GENERAL.—*No. 1501A.D.—The 9th June 1905.*—Mr. W. D. R. Prentice, Officiating Joint-Magistrate and Deputy Collector, Howrah, is allowed leave for three months, under article 260 of the Civil Service Regulations, with effect from the date on which he may avail himself of it.

Howrah.

No. 1518A.D.—The 10th June 1905.—In modification of the order of the 20th May 1905, the Hon'ble Mr. R. T. Greer, C.S.I., Chairman of the Corporation of Calcutta, is allowed combined leave for six months and two days, viz., privilege leave for fourteen days under article 260 of the Civil Service Regulations, with effect from the 26th April 1905, and furlough on medical certificate for the remaining period under article 311 of the Regulations.

Calcutta.

No. 1561A.D.—The 12th May 1905.—Babu Avinas Chandra Mukherjee, Deputy Magistrate and Deputy Collector, is allowed medical leave for six months, under article 336 of the Civil Service Regulations, in continuation of the combined leave granted to him under the order of the 24th November 1904.

No. 1573A.D.—The 13th June 1905.—Mr. E. H. C. Walsh, Officiating Commissioner of the Burdwan Division, is allowed special privilege leave for one month, under the Resolution of the Government of India, Department of Finance and Commerce, No. 16P., dated the 5th January 1905, with effect from the 15th June 1905.

Burdwan Divn.

The following order is republished from the *Assam Gazette* :—

No. 2516J.—The 2nd June 1905.—Babu Mati Lal Sinha, Sub-Judge of Sylhet, is granted leave on private affairs for three months, under article 337 of the Civil Service Regulations, with effect from the date on which he may be relieved.

R. W. CARLYLE,
Offg. Chief Secy. to the Govt. of Bengal.

REVENUE DEPARTMENT.

NOTIFICATIONS.

No. 1119T.R.—The 6th June 1905.—The three weeks' privilege leave granted to Mr. T. H. Monteath, Deputy Conservator of Forests, provisional substantive, in Notification No. 502T.R., dated 17th April 1905, is extended to one month. Mr. A. W. Stark, Deputy Magistrate and Deputy Collector, in charge of the Khurda subdivision, will continue to hold charge of the Puri Division, in addition to his present duties.

Puri.

No. 1099T.R.—The 5th June 1905.—Babu Rai Krishna Bahadur, Deputy Collector, is appointed to discharge the functions of a Collector, under section 167 of the Bengal Tenancy Act, VIII of 1885, in the district of Shahabad.

Shahabad.

No. 1100T.R.—The 6th June 1905.—In the list of villages comprised in tausi No. 208 of the Tippera Collectorate, appended to the Government Notification No. 1474L.R., dated the 14th March 1905, published at pages 513-15, Part I of the *Calcutta Gazette* of the 22nd idem, ordering the survey

Tippera. Noakhali.

and the demarcation of boundaries, under section 3 of the Bengal Survey Act, of certain villages appertaining to estate Patikara, in the district of Tippera—

For	"Moradnagar"	in	Serial	Nos.	1 to 7	*read*	"Muradnagar."
,,	"Barirchar"	,,	,,	No.	10	,,	"Rarirchar."
,,	"Belash Harikhola"	,,	,,	,,	11	,,	"Bolasha Harikhola."
,,	"Mahurang"	,,	,,	,,	12	,,	"Maharang."
,,	"Bhuiyarpur"	,,	,,	,,	23	,,	"Bhoairpar."
,,	"Moradnagar"	,,	,,	,,	26	,,	"Muradnagar."
,,	"Aishadai"	,,	,,	,,	28	,,	"Aishadari."
,,	"Chandipur"	,,	,,	Nos.	35 to 44	,,	"Chandpur."
,,	"Bahuria"	,,	,,	No.	37	,,	"Baharia."
,,	"Icholi" and "Dakshin Icholi."	,,	,,	,,	41	,,	"Ichali" and "Dakshin Ichali."
,,	"Kamalapur Monda"	,,	,,	,,	44	,,	"Kamlapur Manda."
,,	"Shayampur"	,,	,,	,,	47	,,	"Syampur."
,,	"Shyampur"	,,	,,	,,	55	,,	"Syampur."
,,	"Rosulpur"	,,	,,	,,	56	,,	"Rasulpur."
,,	"Shoukholi"	,,	,,	,,	57	,,	"Shaukhali."
,,	"Monoharpur"	,,	,,	,,	61	,,	"Manoharpur."
,,	"Khashimnagar"	,,	,,	,,	62	,,	"Kashimnagar."

Tippera. Noakhali.

No. 1101T.R.—The 6th June 1905.—In the list of villages, comprised in tauzi No 208 of the Tippera Collectorate, appended to the Government Notification No. 1473L R.. dated the 14th March 1905, published at pages 512-13, Part 1 of the *Calcutta Gazette* of the 22nd idem, ordering the survey and the preparation of a record-of-rights, under section 101 (2) (*c*) of the Bengal Tenancy Act, in respect of certain villages appertaining to estate Patikara, in the district of Tippera :—

For	"Moradnagar"	in	Serial	Nos.	1 to 7	*read*	"Muradnagar."
,,	"Barirchar"	,,	,,	No.	10	,,	"Rarirchar."
,,	"Belash Harikhola"	,,	,,	,,	11	,,	"Belasha Harikhola."
,,	"Mahurang"	,,	,,	,,	12	,,	"Maharang"
,,	"Bhuiyarpur"	,,	,,	,,	23	,,	"Bhoairpar"
,,	"Moradnagar"	,,	,,	,,	26	,,	"Muradnagar."
,,	"Aishadai"	,,	,,	,,	28	,,	"Aishadari."
,,	"Chandipur"	,,	,,	Nos.	35 to 44	,,	"Chandpur."
,,	"Bahuria"	,,	,,	No.	37	,,	"Baharia."
,,	"Icholi" and Dakshin Icholi."	,,	,,	,,	41	,,	"Ichali" and "Dakshin Ichali."
,,	"Kamalapur Monda"	,,	,,	,,	44	,,	"Kamlapur Manda."
,,	"Shayampur"	,,	,,	,,	47	,,	"Syampur."
,,	"Shyampur"	,,	,,	,,	55	,,	"Syampur."
,,	"Rosulpur"	,,	,,	,,	56	,,	"Rasulpur."
,,	"Shoukholi"	,,	,,	,,	57	,,	"Shaukhali."
,,	"Monoharpur"	,,	,,	,,	61	,,	"Manoharpur."
,,	"Khashimnagar"	,,	,,	,,	62	,,	"Kashimnagar."

Murshidabad.

No. 1120T.R.—The 7th June 1905.—Under section 3 of the Bengal Survey Act, V (B.C.) of 1875, the Lieutenant-Governor is pleased to order that a survey shall be made of all lands lying in village Ajitpur of estate Kismat Pargana Fatehsing, tauzi No. 253, of the Murshidabad Collectorate, and that the boundaries of estates, tenures, mauzas and fields be demarcated on the said lands so to be surveyed.

Murshidabad.

No. 1121T.R.—The 7th June 1905.—Whereas an application has been made by the Nawab Bahadur of Murshidabad, the proprietor of 13-anna share and patnidar of the remaining 3-anna share of estate Fatehsing, bearing tauzi No 253 of the Murshidabad Collectorate, for a survey and the preparation of a record-of-rights in respect of all lands situated in village Ajitpur of that estate, and whereas the estimated cost of the operations has been deposited by the Nawab Bahadur:

In exercise of the powers conferred upon him by section 101 (2) (*a*) of the Bengal Tenancy Act, VIII of 1885, as amended by Act III (B.C.) of 1898, the Lieutenant-Governor is pleased to order that a survey shall be made and a record-of-rights prepared in respect of all lands included within the boundaries of village Ajitpur, in the district of Murshidabad, appertaining to the said estate.

The particulars to be recorded in the survey and record-of-rights shall be the following :—

(*a*) the name of each tenant or occupant;

(*b*) the class to which each tenant belongs, that is to say, whether he is a tenure-holder, raiyat holding at fixed rates, settled raiyat, occupancy raiyat, non-occupancy raiyat, or under-raiyat; and, if he is a tenure-holder, whether he is a permanent tenure holder or not, and whether his rent is liable to enhancement during the continuance of his tenure;

(*c*) the situation, quantity and one or more of the boundaries of the land held by each tenant or occupier;
(*d*) the name of each tenant's landlord;
(*e*) the money-rent payable at the time the record-of-rights is being prepared; or if a produce-rent, the fact that a produce-rent is paid, and the customary terms according to which such rent is paid;
(*f*) the mode in which that rent has been fixed—whether by contract, by order of a Court, or otherwise;
(*g*) if the rent is a gradually increasing rent, the time at which, and the steps by which, it increases;
(*h*) the special conditions and incidents, if any, of the tenancy;
(*i*) if the land is claimed to be held rent-free,—whether or not rent is actually paid, and, if not paid, whether or not the occupant is entitled to hold the land without payment of rent, and, if so entitled, under what authority;
(*j*) the name of each proprietor, including rent-free owner, with the character and extent of his interest, and the situation, quantity, and one or more of the boundaries of each proprietor's private lands, as defined in Chapter XI of the Act;
(*k*) the custom of the village regulating the methods of irrigation, and the duties and rights of both landlords and tenants with respect to the use and maintenance of the means of irrigation.

No. 1136T.R.—The 8th June 1905.—Whereas an application has been made by Babu Jogendra Nath Ghose for the survey and preparation of a record of rights in respect of all lands in his tenure in village Kamalapur, including Kalipur, in estate Mamudabad (six annas), bearing tauzi No. 154 on the revenue-roll of the Khulna Collectorate; and whereas he has agreed to deposit the estimated cost of the operations:—

Khulna.

In exercise of the powers conferred upon him by section 101 (2) (*a*) of the Bengal Tenancy Act, VIII of 1885, as amended by Act, III (B.C.) of 1898, the Lieutenant-Governor of Bengal is pleased to direct that a survey shall be made and a record of rights prepared in respect of all lands included in the said tenure.

The particulars to be recorded in the survey and record of rights shall be the following:—

(*a*) the name of each tenant or occupant;
(*b*) the class to which each tenant belongs, that is to say, whether he is a tenure-holder, raiyat holding at fixed rates, settled raiyat, occupancy raiyat, non-occupancy raiyat or under-raiyat; and, if he is a tenure-holder, whether he is a permanent tenure-holder or not, and whether his rent is liable to enhancement during the continuance of his tenure;
(*c*) the situation and quantity and one or more of the boundaries of the land held by each tenant or occupier;
(*d*) the name of each tenant's landlord;
(*e*) the money-rent payable at the time the record of rights is being prepared; or if a produce-rent, the fact that a produce-rent is paid, and the customary terms according to which such rent is paid;
(*f*) the mode in which that rent has been fixed,—whether by contract, by order of a Court, or otherwise;
(*g*) if the rent is a gradually increasing rent, the time at which, and the steps by which, it increases;
(*h*) the special conditions and incidents, if any, of the tenancy;
(*i*) if the land is claimed to be held rent-free,—whether or not rent is actually paid, and, if not paid, whether or not the occupant is entitled to hold the land without payment of rent, and, if so entitled, under what authority;
(*j*) the name of each proprietor, (including rent-free owner), with the character and extent of his interest, and the situation, quantity, and one or more of the boundaries of each proprietor's private lands, as defined in Chapter XI of the Act.
(*k*) the customs of the villages regulating the methods of irrigation, and the duties and rights of both landlords and tenants with respect to the use and maintenance of the means of irrigation.

No. 1172T.R.—The 7th June 1905.—The following draft of rules which it is proposed to make under the Glanders and Farcy Act, 1899 (XIII of 1899), for the Port of Calcutta, the River Hooghly and the channels leading to the said Port, is published for the information of persons likely to be affected thereby. This draft will be taken into consideration on or after the 14th July 1905, and objections or suggestions which any person may desire to make should be sent to the undersigned by that date.

R. W. CARLYLE,
Offg. Chief Secy. to the Govt. of Bengal.

Draft Notification.

In exercise of the power conferred by section 14 of the Glanders and Farcy Act, 1899 (XIII of 1899), the Lieutenant-Governor is pleased to make the following rules for the

Port of Calcutta, the River Hooghly and the channels leading to the said Port, as defined in Government Notification No. 54Marine, dated the 2nd March, 1897.

1. In these rules,—

(1) "the Act" means the Glanders and Farcy Act, 1899 (XIII of 1899);

(2) "the Head Office" means the head office at the Bengal Veterinary College, Belgachia;

(3) "the hospital" means the Contagious Diseases (Animals) Hospital attached to the Bengal Veterinary College, Belgachia;

(4) "Inspector" means an Inspector appointed under section 4 of the Act;

(5) "the Port" means the Port of Calcutta, and includes the River Hooghly and the channels leading to the said Port;

(6) "schedule" means a schedule annexed to these rules;

(7) "the Superintendent" means the Superintendent or other officer in charge of the Civil Veterinary Department, Bengal; and

(8) "Veterinary Practitioner" means a Veterinary Practitioner appointed under the Act.

N. B.—By virtue of section 20 of General Clauses Act, 1897 (X of 1897), expressions used in these rules have the same meaning as in the Glanders and Farcy Act, 1899; consequently, the expression "diseased" has the meaning stated in section 2 (1) of the latter Act, and the word "horses" includes asses and mules—see section 2 (8) of that Act.

Control by Superintendent.

2. (1) The operations under the Act in the Port shall be under the direction of the Superintendent.

(2) All Inspectors and Veterinary Practitioners, and all members of the Veterinary Preventive Force appointed to assist Inspectors and Veterinary Practitioners in carrying out the purposes and objects of the Act, shall be under the control of the Superintendent.

Duties of Master and signaller on arrival of vessel off Saugor Island.

3. Whenever a vessel with one or more horses on board arrives off Saugor Island,—

(1) the Master shall—

(a) report to the Pilot in charge of the vessel the fact of a horse or horses being on board; and

(b) hoist at the main or mizen mast, for the information of the Inspector on duty in the Port (if any horse is from Queensland) Flag H, or (if none of the horses are from Queensland) Flag N; and

(c) keep the said flag flying until he is informed by the inspector at Diamond Harbour that none of the horses are diseased; and

(2) the signaller at Saugor shall telegraph at once to the Inspector at Diamond Harbour and to the Superintendent the arrival of the vessel.

Delivery of copy of sections of Act.

4. The said Pilot shall deliver to the said Master a printed copy of sections 2, 10 and 11 of the Act, and the Master shall give such copy to the owner or person in charge of the said horse or horses.

Report of disease by Pilot or Police or Customs Officer.

5. If the said Pilot, or any officer of Police or of the Customs Department who goes on board the said vessel, has reason to believe that any horse on board is diseased, he shall at once give information thereof to—

(a) the Master of the vessel,

(b) the Superintendent of the Water Police, and

(c) the Inspector on duty in the Port.

Suspension of disembarkation of horses.

6. If the Master of the said vessel has reason to believe that any horse on board is diseased, or if information that any such horse is diseased is given to him under rule 5, he shall prevent any horse from being disembarked until an Inspector has inspected all the horses on board.

Report by Police when services of the Inspector on duty in the Port are not available.

7. If the services of the Inspector on duty in the Port should not be immediately available, when required for the purposes of any of the foregoing rules, the Police on duty in the Port must at once inform the nearest Inspector and the Head Office of the fact.

Duty of Superintendent of Water Police on receiving information under rule 5.

8. Whenever any information is given to the Superintendent of the Water Police under rule 5, he shall cause the same to be taken down in writing, and shall at once forward the writing to an Inspector and to the Head Office.

Procedure where any officer of the Government suspects disease on landing.

9. (1) If any officer of the Government has reason to believe that any horse which is being landed or has just been landed at any wharf, dock, bandor or other place is diseased, the person in charge of such horse shall, upon the requisition of such officer, keep the said horse, and all other horses (if any) landed with it, separate, at or near the spot where it has been landed, until an Inspector has inspected all the horses.

(2) The officer making such requisition shall forthwith give information to the nearest superior officer of police, who shall cause the same to be taken down in writing, and shall at once forward the writing to an Inspector and to the Head Office.

Entry of vessel by Inspector.

10. (1) Whenever an Inspector has reason to believe that a diseased horse is to be found on board any vessel in or about to enter the Port, he shall enter such vessel and search for and inspect such horse and all other horses (if any) on board such vessel.

(2) Every entry upon and search of a vessel, and every inspection of horses, made by an Inspector under this rule or under section 5 of the Act, must be made in the presence of the Master or some other officer of the vessel, and of the owner or person in charge of the horses if he desires to attend.

(3) Before making any such entry the Inspector shall, if so required, produce his certificate of appointment.

(4) Every such certificate shall be in the form contained in Schedule I.

(5) When making any such entry, search and inspection, the Inspector may be accompanied by any other Inspector or Inspectors or any Veterinary Practitioner or any member or members of the Veterinary Preventive Force whom he may consider it necessary to take with him.

(6) The Master and every officer of such vessel, and the owner or person in charge of the horses on board, shall give free access to the Inspector and the persons (if any) accompanying him, and shall in every way facilitate his search and inspection.

Procedure when Inspector believes horse to be diseased.

11. (1) Whenever an Inspector has reason to believe that any horse on board a vessel in the port is diseased, he shall seize such horse and deliver it to a member of the Veterinary Preventive Force, to be taken to a Veterinary Practitioner.

(2) If such Veterinary Practitioner certifies under section 8 of the Act that the horse is suffering from any disease other than glanders or farcy, he shall, as soon as possible, order it either—

(a) to be destroyed, or

(b) to be sent, with all due care for the prevention of contagion to other horses and to human beings, to the hospital, where it shall be dealt with under the Act and these rules; or

(c) to be otherwise treated or dealt with,

as he may deem necessary.

(3) Any horse so sent to the hospital may be detained therein for such time as the officer in charge may consider necessary, and may be submitted to any recognised test.

Presentation of documents after seizure of horse.

12. (1) When an Inspector seizes a horse under section 6 of the Act, he shall present to the Master of the vessel, or to the owner or person in charge of the horse, a printed copy of these rules.

(2) If the Inspector is a Veterinary Practitioner, and if the horse is found on examination to be diseased, he shall also present to such owner or person a certificate in the form set forth in Schedule II.

(3) If the Inspector is not a Veterinary Practitioner, and if the horse is found on examination by a Veterinary Practitioner to be diseased, the Inspector shall, as soon as practicable, procure from such practitioner a certificate in the said form and shall serve a copy of it on the said Master, owner or person.

(4) If the said Master, owner or person is absent at the time of the seizure, the Inspector shall nail on to a prominent place on the vessel the documents hereinbefore mentioned.

Procedure when, after examination, a horse is not certified to be diseased.

13. (1) If, after completing the examination of a horse, the Veterinary Practitioner does not certify that the horse is diseased, the expenses incurred shall be debited to the Government.

(2) If the person entitled to the possession of the horse is not present to receive it under section 8 (2) of the Act, the Inspector shall forthwith serve upon him a notice, in the form contained in Schedule III, requesting him to remove the horse within a period of seven days from the date of the notice.

(3) The said notice may be served either personally or by leaving it at the last known residence or place of business of the person believed to be entitled to the possession of the horse; and in the latter case a copy of the notice shall be posted at the police-station within the local limits of which the horse was seized.

(4) If the horse is not removed within the aforesaid period of seven days, it may be—

(a) sold to defray expenses, in which case any balance that may remain after meeting all charges may be kept at the owner's disposal for two months, after which time it shall be the property of the Government; or

(b) sent to the Pinjrapole; or

(c) destroyed.

Destruction of horses.

14. If a Veterinary Practitioner certifies under section 8 of the Act that a horse is suffering from glanders or farcy, or orders, under rule 11, that a horse certified to be suffering from any other disease be destroyed, or if the destruction of a horse is ordered under rule 13, it shall be destroyed humanely in the presence of an Inspector, and the carcass shall be disposed of in the presence of a member of the Veterinary Preventive Force.

Licenses for removal of horses.

15. (*1*) Licenses under section 11 of the Act for the removal of horses which have been with a diseased horse shall be granted by the Inspector in the form contained in Schedule IV.

(*2*) The place to which horses shall be removed under any such license for isolation shall ordinarily be the hospital.

Precautions during transit of horse or carcass.

16. When a horse or carcass which is diseased or believed to be diseased is about to be removed to another place for examination, slaughter, cremation, burial or any other lawful purpose, the owner or person in charge of the horse or carcass shall attach a suitable covering over the nostrils and to any part of the body or carcass from which contagious or infectious matter may escape, so as to minimise danger from contact during removal.

Disposal of carcasses of diseased horses.

17. (*1*) If a diseased horse dies, the owner or the person in charge of it shall, as soon as possible, and with all due care for the prevention of contagion to other horses and to human beings, cause the carcass to be taken to a suitable place, to be there burnt or buried or otherwise disposed of in the safest and most efficacious manner practicable

(*2*) The means of disposal to be adopted shall be decided in each case by an Inspector, and shall be recorded in writing; and the work shall be carried out under the supervision of a member of the Veterinary Preventive Force.

Methods of disinfection of vessel under section 9 of the Act.

18. (*1*) Whenever an Inspector issues a notice under section 9 of the Act to the Master or the officer in charge of a vessel, to have the same disinfected, such disinfection shall be regulated as follows, namely:—

(*a*) all refuse derived from cleansing, and all dung, litter, straw, grass or hay, shall be taken to a suitable place and burnt; and any material left after burning shall be buried according to orders issued by an Inspector;

(*b*) every piece of stable gear connected in any way with a diseased horse, including feeding-troughs, pails and battens, shall be destroyed by fire, except iron-work, and that shall be made red hot;

(*c*) every part of the vessel which has been within reach of a diseased or suspected horse shall be thoroughly scraped.

(*d*) in the case of a steam vessel,—

(*i*) the steam hose superheated shall be turned on and carefully applied to every part of the deck, hold or other place which has been occupied by any horse;

(*ii*) the deck, hold or other place shall then be washed with soft soap and hot water, mixed with crude carbolic acid or phenyle in the proportion of one part of acid to twenty parts of water; and

(*iii*) the said place shall then be freely ventilated;

(*e*) in the case of a sailing ship, or of a steam-ship unprovided with a steam hose, the procedure prescribed in clause (*a*) shall be adopted, except that scrubbing with hot water may be substituted for the use of a steam hose.

(*2*) Notwithstanding anything in clause (*1*), the Inspector may, for reasons recorded in writing, prescribe any method of disinfection which the special circumstances of a particular case may seem to him to require.

Examination of vessel by Inspector after disinfection.

19. (*1*) Every vessel which has been disinfected under rule 18 shall, after disinfection, be examined by an Inspector.

(*2*) The Master or officer in charge of any such vessel shall give such Inspector all reasonable facilities for such examination.

(3) If the Inspector is not satisfied that the work of disinfecting any vessel has been thoroughly done, he may pass such orders as he may consider necessary to secure the proper disinfection of the vessel, and the Master or officer in charge of the vessel shall be bound forthwith to carry out such orders.

Recovery of expenses in dealing with diseased horse.

20. The expense of detaining, isolating and testing, under the Act or these rules, any horse which a Veterinary Practitioner has certified to be diseased shall be recovered from the owner or the person who was in charge of such horse, according to the following scale, namely:—

(*a*) a fee of one rupee for admission to the hospital;

(*b*) four annas a day for food; and

(*c*) in the event of slaughter or death, a fee of two rupees for disposing of the carcass:

Provided that the whole or any part of such expense may be remitted and debited to the Government by the Superintendent, if it is proved to his satisfaction that the debtor has

executed promptly and thoroughly all the duties laid upon him by or under the Act or these rules:

Provided also that no charge shall be made for admission or for food if the owner or the person who was in charge of the horse himself provides food and an attendant.

Form of account.

21. Every account rendered under rule 20 to an owner or to a person who was in charge of a horse shall be prepared in the form contained in Schedule V, so far as it is applicable.

Recovery of sums due.

22. All sums due from any person under rule 20 shall be recoverable, on application to a Magistrate, as if they were fines.

Assistance by police.

23. In the event of obstruction, the Police shall be bound, on the written application of an Inspector, a Veterinary Practitioner, or a member of the Veterinary Preventive Force, to render such officers such assistance as may be necessary to enable them duly to perform their duties under the Act and these rules.

Uniforms.

24. Every Inspector, and every member of the Veterinary Preventive Force, who is not a gazetted or commissioned officer, shall, when on duty, wear a distinctive uniform prescribed for his department:

Provided that the Superintendent may, by written order, exempt any officer from compliance with this rule.

Penalty for breach of rule.

25. Whoever commits a breach of any of these rules shall be punishable with imprisonment for a term which may extend to one month, or with fine which may extend to fifty rupees, or with both.

SCHEDULE I.—REFERRED TO IN RULE 10 (4).

GLANDERS AND FARCY ACT, 1899.

Certificate of Appointment of Inspector.

CERTIFIED that

* No. , dated published in the *Calcutta Gazette* of the, 190 , Part , page .
†

of , has been appointed, by Government Notification noted in the margin* to be an Inspector under the Glanders and Farcy Act, 1899 (XIII of 1899), and to exercise and perform, within the area noted on the margin,† the powers conferred and the duties imposed by that Act on such officers.

BELGACHIA,

The 190 . *Supdt., Civil Vety. Dept., Bengal.*

SCHEDULE II.—REFERRED TO IN RULE 12 (2) AND (3).

GLANDERS AND FARCY ACT, 1899.

Certificate that horse is diseased.

I , Veterinary Practitioner under the Glanders and Farcy Act, 1899 (XIII of 1899), hereby certify as follows:—

Description—
Breed.
Sex.
Colour.
Apparent age.
Brand and other marks of identification.

A horse, as noted in the margin, said to belong to , or to have been in charge of , of , having been seized under the said Act by Inspector I have this day, the of 190 , examined the said horse and believe it to be diseased within the meaning of section 2 (1) of the said Act.

BELGACHIA,

Calcutta *Veterinary Practitioner.*

SCHEDULE III.—REFERRED TO IN RULE 13(2).

GLANDERS AND FARCY ACT, 1898.

Notice for removal of horse.

I BEG to inform you that the horse, as noted in the margin, seized under the Glander and Farcy Act, 1899 (XIII of 1899), has been found to be free from disease. You are, therefore, requested to remove the same on or before the of 190 . Should the animal not be removed, it will be dealt with in accordance with clause (4) of rule 13 made under the Act, a copy of which is printed below.

Description—
Breed.
Sex.
Colour.
Apparent age.
Brand and other marks of identification.

Yours faithfully,

Inspector.

CALCUTTA,

The 190

Procedure when, after examination a, horse is not certified to be diseased.

18. (*1*) If, after completing the examination of a horse, the Veterinary Practitioner does not certify that the horse is diseased, the expenses incurred shall be debited to the Government.

(*2*) If the person entitled to the possession of the horse is not present to receive it under section 8 (*2*) of the Act, the Inspector shall forthwith serve upon him a notice, in the form contained in Schedule III, requesting him to remove the horse within a period of seven days from the date of the notice.

(*3*) The said notice may be served either personally or by leaving it at the last known residence or place of business of the person believed to be entitled to the possession of the horse; and in the latter case a copy of the notice shall be posted at the police-station within the local limits of which the horse was seized.

(*4*) If the horse is not removed within the aforesaid period of seven days, it may be—

(*a*) sold to defray expenses, in which case any balance that may remain after meeting all charges may be kept at the owner's disposal for two months, after which time it shall be the property of the Government; or

(*b*) sent to the Pinjropole; or

(*c*) destroyed.

SCHEDULE IV.—REFERRED TO IN RULE 15 (*1*).

GLANDERS AND FARCY ACT, 1899.

License to remove a horse.

LICENSE for the removal of the under-mentioned horse/horses which has/have been with a diseased horse.

* Revenue Department Notification No. , dated published in the *Calcutta Gazette* of the .

† Description—
Breed.
Sex.
Colour.
Apparent age.
Brand and other marks of identification.

Under section 11 of the Glanders and Farcy Act, 1899 (XIII of 1899), and in accordance with the rules made under section 14 of the said Act, published as specified in the margin,* I hereby grant, this day of 190 , to , the owner *or* person in charge of the horse described in the margin,† a license to remove the same from to on the conditions and with the precautions noted below—

Conditions—

Precautions—

Dated *190* . *Inspector.*

NOTE.—Section 11 of the Glanders and Farcy Act provides as follows :—

"No person in charge of any horse which has been in the same field, building or place as, or in contact with, a diseased horse shall remove such horse, except in good faith for the purpose of preventing infection, or under a license to be granted by the Inspector and subject to the conditions of the license.

SCHEDULE V.—REFERRED TO IN RULE 21.

GLANDERS AND FARCY ACT, 1899.

Notice of destruction of horse.

No. .

BELGACHIA, CALCUTTA,
The *190*

To

SIR,

I BEG to inform you that the horse, as noted in the margin, seized on the has this day been destroyed in accordance with the Glanders and Farcy Act, 1899 (XIII of 1899), and the rules made thereunder having been found to be suffering from disease.

Description—
Breed.
Sex.
Colour.
Apparent age.
Brand and other marks of identification.

The charges, as detailed below, amount to Rs. . which I request you to be so good as to remit to this office within fourteen days.

	Rs.	A.	P.
Hospital fee			
Feeding charges for days, at 4 annas per diem.			
Disposal of carcass			
Cost of disinfection			
Total ...			

Yours faithfully,

Inspector, C. V. D., Bengal.

No. 1182T.R.—The 9th June 1905.—Notification No. 1129T.R., dated the 15th June 1903, published at page 831, Part I of the *Calcutta Gazette* of the 24th idem, ordering the survey and the preparation of a record-of-rights, under section 101 (*2*) (*a*) of the Bengal Tenancy Act, VIII of 1885, as amended by Act III (B.C.) of 1898, in respect of all lands of the tenure Kalika Prosad Mazumdar, situated in village Challish Kahania, appertaining to estate No. 136, in the district of Mymensingh, is hereby cancelled.

Mymensingh.

No. 1184T R.—The 9th June 1905.—In exercise of the power conferred by section 12 of the Chota Nagpur Landlord and Tenant Procedure Act (Bengal Act I of 1879), as amended by the Chota Nagpur Tenancy (Amendment) Act, 1903 (Bengal Act V of 1903), and in modification of Government Notification No. 1712L.R., dated 23rd March 1905 (published at pages 539-540 of Part I of the *Calcutta Gazette* of the 29th idem), the Lieutenant-Governor is pleased to prescribe, for use in the estate of Bara Lal Nawal Kishore Nath Sah Deo of Palkote, in the district of Ranchi, the form of rent-receipt annexed to Government Notification No. 1711, dated 23rd March 1905 (published at pages 537—39 of Part I of the said Gazette).

Ranchi.

No. 1215T.R.—The 12th June 1905.—Babu Bhubaneswar Sanyal is appointed to be an Assistant Settlement Officer in the district of Midnapore. He is authorised, under section 3 (17) of the Bengal Tenancy Act, VIII of 1885, as amended by Act III (B.C.) of 1898, to discharge the functions of a Revenue Officer, under the provisions of that Act, so far as they relate to Revenue Officers, in the district of Midnapore.

Midnapore.

He is also vested with the powers of an Assistant Settlement Officer under Rule 1, Chapter VI of the Rules under the Bengal Tenancy Act.

R. W. CARLYLE,
Offg. Chief Secy. to the Govt. of Bengal.

DECLARATION—By the Government of Bengal, Revenue Department.

No. 1214T.R.—The 12th June 1905.—Whereas certain land was acquired by the Bengal Government, under the provisions of Act I of 1894 and Act XVIII of 1885, for a public purpose, viz, for the Chanch Branch of the East Indian Railway at about mile 146¼ from Calcutta, and about 3¼ miles from the Barakar Railway Station in district Manbhum, and whereas coal mines are situate under the said land, and whereas the Bengal Coal Company, Limited, have given notice to the Government of Bengal, in accordance with the provisions of Act XVIII of 1885, that the said Company intend to work the mines in question, and whereas the mines have been inspected by the officer appointed by the Bengal Government for the purpose under section 5 (1) of Act XVIII of 1885, and whereas it appears to the Bengal Government that the working out of the coal of the mines underlying the said land is likely to cause damage to the surface of the said land and to the works constructed thereon, and whereas the said Bengal Coal Company, Limited, have agreed not to work and get minerals underlying the land acquired for their siding or underlying the land acquired for the branch or other lines with which the siding is connected, or underlying the land of the branch or branches connecting the said siding with the main line, in such a manner as to injure or to endanger the safety of the undertaking or any part thereof, nor to claim any compensation for any restricted working:

Manbhum.

Now, therefore, the Lieutenant-Governor of Bengal is pleased to declare, under section 5, sub-section (2), clause (*b*) of the abovementioned Act, XVIII of 1885, that the working shall be carried on by the said Bengal Coal Company, Limited, in the manner and subject to the restrictions below specified, viz.—

(1) all galleries to measure not more than 12 feet wide and 11 feet high;
(2) all the coal pillars formed under the river to measure not less than 94 feet from north to south and 140 feet from east to west;
(3) all other pillars to measure not less that 48 feet square;
(4) no galleries to be driven, nor other work done, where the distance from the top of the seam to the surface is less than 50 feet except that two galleries may be driven, across the land, of a size not greater than 10 feet wide and 7 feet high and with centres not less than 40 feet apart;

and that in all the above cases no further excavation shall be made in any of the galleries which already have been driven, the actual heights and widths of which have been carefully recorded on the plan marked L. A. M. A. No. 33, signed by the Chief Inspector of Mines.

The plan referred to may be seen in the office of the Chief Inspector of Mines in India.

R. W. CARLYLE,
Offg. Chief Secy. to the Govt. of Bengal.

DECLARATION.

No. 1094T.R.—The 3rd June 1905.—Whereas it appears to the Lieutenant-Governor of Bengal that land is required to be taken by Government at the public expense for a public purpose, viz., for Dostia-Barewa drainage cut, in the villages of Dostia and Barewa, pargana Majhowa, zilla Champaran, it is hereby declared that for the above purpose a piece of land measuring, more or less, 6 bighas 3 cottahs 4 chitaks of standard measurement, bounded as follows, is required within the aforesaid villages of Dostia and Barewa:—

Champaran.

IN VILLAGE DOSTIA.

North—By fields of Shaik Kurban Ali, Shaik Abdul Korim and others.
East—By fields of Kurban Ali and Shaik Abdul.
South—By fields of Shaik Abdul, Shaik Kurban Ali and others.
West—By boundary ridge of Barewa mauza and fields of Malang and others.

IN VILLAGE BAREWA.

North—By fields of Shaik Malang, Choukari Chamar and others.
East—By boundary ridge separating Dostia and Barewa mauzas.
South—By fields of Shaik Abdul, Shaik Malang and others.
West—By fields of Nirash Mean.

This declaration is made, under the provisions of section 6 of Act I of 1894, to all whom it may concern

A plan of the land may be inspected in the office of the Executive Engineer, Champaran Division, Ramnagar.

R. W. CARLYLE,
Offg Chief Secy. to the Govt. of Bengal.

DECLARATION.

No. 1095T.R —The 2nd June 1905.—Whereas it appears to the Lieutenant-Governor of Bengal that land is required to be taken by Government at the public expense for a public purpose, viz., for the construction of Hospital building at Jalpaiguri, in the town of Jalpaiguri at taluk Kharia, pargana Baikuntpur, zilla Jalpaiguri, it is hereby declared that for the above purpose a piece of land measuring, more or less, 5 bighas, 6 cottahs and 10 chitaks of standard measurement, bounded on the north bank of the river Karola, on the east by side cutting of Jalpaiguri-Damdim public road, on the south by District Board depôt, and on the west by river Karola, is required within the aforesaid taluk Kharia.

Jalpaiguri.

This declaration is made, under the provisions of section 6 of Act I of 1894, to all whom it may concern.

A plan of the land may be inspected in the office of the Deputy Commissioner of Jalpaiguri.

R. W. CARLYLE,
Offg. Chief Secy. to the Govt. of Bengal.

DECLARATION.

No. 1098T.R.—The 5th June 1905.—Whereas it appears to the Lieutenant-Governor of Bengal that land is required to be taken by Government at the publir expense for a public purpose, viz., for a treasury building at Barisalt in the village of Barisal, pargana Gredabandar, zilla Backergunge, it is hereby declared thas for the above purpose a piece of land measuring, more or less, 1 bigha 13 cottahs 8 chitaks of standard measurement, bounded on the north by Govinda Babu's land and Ruhini Babu's building, on the east by a tank and Ruhini Babu's building, on the south by a road leading to Ruhini Babu's house, and on the west by Chak Bazar Road, is required within the aforesaid village of Barisal.

Backergunge.

This declaration is made, under the provisions of section 6 of Act I of 1894, to all whom it may concern.

A plan of the land may be inspected in the office of the Collector of Backergunge.

R. W. CARLYLE,
Offg. Chief Secy. to the Govt. of Bengal.

DECLARATION.

No. 1102T.R.—The 5th June 1905.—Whereas it appears to the Lieutenant-Governor of Bengal that land is required to be taken by Government at the expense of the Dinajpur Municipality for a public purpose, viz., of widening the Garuhaty drain, in the village of Prannathpur, pargana Bijanagar, zilla,

Dinajpur.

Dinajpur, it is hereby declared that for the above purpose two pieces of land measuring in all, more or less, 2 cottahs 14 chitaks of standard measurement, bounded as follows, are required within the aforesaid village of Prannathpur:—

PLOT No. 1.

North—Garuhaty drain.
South—Municipal drain and lane.
East—Babu Baroda Kanta Ray's *shabjibagan*.
West—Waste land of Joy Durga Debi.

PLOT No. 2.

North—Garuhaty drain and lane.
South— Ditto ditto.
East—House of Babu Kishori Mohun Mazumdar.
West—Municipal drain and lane.

This declaration is made, under the provisions of section 6 of Act I of 1894, to all whom it may concern.

A plan of the land may be inspected in the office of the Collector of Dinajpur.

R. W. CARLYLE,
Offg. Chief Secy. to the Govt. of Bengal.

DECLARATION.

Dinajpur.

No. 1103 T.R.—The 5th June 1905.—Whereas it appears to the Lieutenant-Governor of Bengal that land is required to be taken by Government at the expense of the Dinajpur Municipality for a public purpose, viz., for widening the Khetripara Lane, in the village of Prannathpur, pargana Bijanagar, zilla Dinajpur, it is hereby declared that for the above purpose three pieces of land measuring in all, more or less, 4 cottahs 10 chitaks of standard measurement, bounded as follows, are required within the aforesaid village of Prannathpur:—

PLOT No. 1.

North—*Sabjibagan* of Babu Baroda Kanta Rai.
South—House of Babu Kishori Mohun Mazumdar.
East—Kotwali road and drain.
West—Municipal drain and lane.

PLOT No 2.

North—Waste land of Joy Durga Debi.
South—Madhu Baisnabi's house.
East—Municipal Garuhati drain.
West—Municipal lane and waste land of Saraswati Dasi.

PLOT No. 3.

North—Land of Babu Pran Sanker Rai and others, Rajapara road and drain.
South—Land of Babu Ram Ratan Pathak and Gurudasi Baisnavi and Municipal lane
East—Municipal lane and land of Babu Pransanker Rai and others.
West—Land of Babu Ram Ratan Pathak and pucca wall of Babu Jogesh Chandra Banerjee.

This declaration is made, under the provisions of section 6 of Act I of 1894, to all whom it may concern.

A plan of the land may be inspected in the office of the Collector of Dinajpur.

R. W. CARLYLE,
Offg. Chief Secy. to the Govt. of Bengal.

DECLARATION.

Dinajpur.

No. 1104 T.R.—The 5th June 1905.—Whereas it appears to the Lieutenant-Governor of Bengal that land is required to be taken by Government at the expense of the Dinajpur Municipality for a public purpose, viz., for the construction of a urinal in the village of Phutaniganj, known by Balubari and Khalpara, pargana Bijanagar, zilla Dinajpur, it is hereby declared that for the above purpose a piece of land measuring, more or less, 3 chitaks of standard measurements bounded on the north by the Municipal drain and patit land, on the south by the Khalpara road, on the east by the rented house of Gogaram Shaha, and on the west by the house, of Domon Sing, is required within the aforesaid village of Phutaniganj, known by Balubari and Khalpara.

This declaration is made, under the provisions of section 6 of Act I of 1894, to all whom it may concern.

A plan of the land may be inspected in the office of the Collector of Dinajpur.

R. W. CARLYLE,
Offg. Chief Secy. to the Govt. of Bengal.

DECLARATION.

No. 1105T.R.—The 3rd June 1905.—Whereas it appears to the Lieutenant-Governor of Bengal that land is required to be taken up by Government at the expense of the Calcutta Municipality for a public purpose, viz., for the construction of a double sewer to the silt-pit of the engine-house at Ballygunge, it is hereby declared that for the above purpose a piece of land from the dwelling-house of Babu Ananda Lal Das, in Ballygunge, Calcutta, district 24-Parganas, measuring, more or less, 1 cottah 12 chitaks of standard measurement, is required. The boundaries of the land are as follow :—

24-Parganas.

North—The remaining portion of the land of the dwelling-house of Babu Ananda Lal Das.

South—Land belonging to the Corporation of Calcutta.

East—A drain situated to the west of Maulvi Ahmed Khan Bahadur's road.

West—Land belonging to the Corporation of Calcutta.

This declaration is made, under the provisions of section 6 of Act I of 1894, to all whom it may concern.

A plan of the land may be inspected in the office of the Commissioners.

R. W. CARLYLE,

Offg. Chief Secy. to the Govt. of Bengal.

DECLARATION.

No. 1122T.R.—The 6th June 1905.—Whereas it appears to the Lieutenant-Governor of Bengal that land is required to be taken by Government at the public expense for a public purpose, viz., for Mohonpur Inspection Bungalow, in the 46th mile of Damodar Left Embankment, in the village of Autpara, pargana Havellee, zilla Burdwan, it is hereby declared that for the above purpose a piece of land measuring, more or less, 5 bighas 4 cottahs 12 chitaks of standard measurement, bounded on the north and south by the paddy lands of Rajaram Samonta and Durga Dass Porkut, on the east by the sunna land of Rajaram Samonta and Durga Dass Porkut, and on the west by the paddy land of Johir Mondal, is required within the aforesaid village of Autpara.

Burdwan.

This declaration is made, under the provisions of section 6 of Act I of 1894, to all whom it may concern.

A plan of the land may be inspected in the office of the Executive Engineer, Northern Drainage and Embankment Division, Calcutta.

R. W. CARLYLE,

Offg. Chief Secy. to the Govt. of Bengal.

DECLARATION.

No. 1137T.R.—The 5th June 1905.—Whereas it appears to the Lieutenant-Governor of Bengal that land is required to be taken by Government at the public expense for a public purpose, viz., for the construction of a retired line of taccavi embankment at Mogra, 835 feet in length and 65 feet in breadth, in the village of Singargurh, pargana Kutubpur, zilla Midnapore, it is hereby declared that for the above purpose a piece of land measuring, more or less, 3 bighas 15 cottahs 6 chitaks of standard measurement, is required within the aforesaid village of Singargurh.

Midnapore.

This declaration is made, under the provisions of section 6 of Act I of 1894, to all whom it may concern.

A plan of the land may be inspected in the office of the Executive Engineer, Cossye Division.

R. W. CARLYLE,

Offg. Chief Secy. to the Govt. of Bengal.

DECLARATION.

No. 1183T.R.—The 10th June 1905.—Whereas it appears to the Lieutenant-Governor of Bengal that land is required to be taken by Government at the public expense for a public purpose, viz., for the Gaptali Ghat line, a diversion from Sarisabari Railway Station in the village of Sarisabari, pargana Kagmari, zilla Mymensingh, it is hereby declared that for the above purpose a piece of land, about 3,240 feet long and varying from 90 to 168 feet in breadth, measuring, more or less, 27 bighas 12 cottahs 8·53 chitaks, or 9 acres 21·25 poles of standard measurement, passing through village Sarisabari, pargana Kagmari, zilla Mymensingh, is required within the aforesaid village.

Mymensingh.

This declaration is made, under the provisions of section 6 of Act I of 1894, to all whom it may concern.

A plan of the land may be inspected in the office of the Collector of Mymensingh.

R. W. CARLYLE,

Offg. Chief Secy. to the Govt. of Bengal.

DECLARATION.

No. 1193T.R.—The 10th June 1905.—Whereas it appears to the Lieutenant-Governor of Bengal that land is required to be taken by Government at the expense of the District Board of Palamau for the construction of a feeder road from the Japla Station on the East Indian Railway to Chatterpur, it is hereby declared that for the above purpose a strip of land 30 to 40 feet in width on either side of the centre line and measuring, more or less, 132 bighas 6 cottahs and 6 chitaks of standard measurement, and passing through mauzas Jitbigah, Japla, Gamharia, Nawadih, Upri, Kamdharpur, Kurmipur, Chowa Chattan and Sandah, is required within pargana Japla in the aforesaid district of Palamau.

Palamau.

This declaration is made, under the provisions of section 6 of Act I of 1894, to all whom it may concern.

A plan of the land may be inspected in the office of the District Engineer of Palamau.

R. W. CARLYLE,
Offg. Chief Secy. to the Govt. of Bengal.

FINANCIAL DEPARTMENT.

No. 227T.O.—The 6th June 1905.—Mr. A. G. S. Shuttleworth, Assistant Opium Agent, attached to the Benares Opium Agency, is granted privilege leave for one month and one day, under article 260 of the Civil Service Regulations, combined with furlough for four months and twenty-nine days, under article 338 of the Civil Service Regulations, with effect from the 1st June 1905, or any subsequent date on which he may avail himself of it.

Benares Agency.

E. A. GAIT,
Offg. Secy. to the Govt. of Bengal.

MEDICAL DEPARTMENT.

No. 1032T.M.—The 10th June 1905.—Lieutenant-Colonel H. C. Banerji, I.M.S., Civil Surgeon, stationed at Nadia, is allowed privilege leave for three months, under article 260, Civil Service Regulations, with effect from the 15th May 1905, or any subsequent date on which he may have availed himself of it.

Nadia.

No. 1034T.M.—The 10th June 1905.—Captain A. G. McKendrick, I.M.S., is appointed temporarily to act as a Civil Surgeon and is posted to Nadia.

Nadia.

E. A. GAIT,
Offg. Secy. to the Govt. of Bengal

NOTIFICATION.

No. 993T.M.—The 7th June 1905.—Captain J. C. H. Leicester, L.M.S., is allowed, with effect from the date on which he may avail himself of it, privilege leave for three months under article 606 of the Civil Service Regulations, with which he is permitted to combine study leave for three months sanctioned by the Government of India.

E. A. GAIT,
Offg. Secy. to the Govt. of Bengal.

JUDICIAL DEPARTMENT.

No. 2920A.

APPOINTMENTS AND TRANSFERS.

No. 1486A.J.—The 8th June 1905.—Babu Mohendro Nath Mukerji, Subordinate Judge, Jessore, is appointed temporarily to act, until further orders, as an Additional Subordinate Judge of Khulna, in the same district.

Jessore.

No. 1487A.J.—The 8th June 1905.—Babu Khogendra Nath Datta, M.A., B.L., is appointed to act as a Munsif in the district of the 24-Parganas, to be ordinarily stationed at Barasat, during the absence, on leave, of Babu Jugul Kisor De, or until further orders.

24-Parganas.

No. 1530A.D.—The 10th June 1905.—Babu Ram Chandra Ghose, M.A., B.L., is appointed to act as a Munsif in the district of Jessore, to be ordinarily stationed at Bagerhat, during the absence, on leave, of Babu Bepin Behari Ghose, or until further orders.

Jessore.

No. 1540A.D.—The 10th June 1905.—Babu Prafulla Chandra Dutta, B.L., is appointed to act as a Munsif in the district of Backergunge, to be ordinarily stationed at Patuakhali, during the absence, on leave, of Babu Behari Lal Sarkar, or until further orders.

Backergunge.

No. 1542A.D.—The 10th June 1905.—Babu Lalit Mohan Basu, B.L., is appointed to act as a Munsif in the district of Cuttack, to be ordinarily stationed at Bhadrak, during the absence, on leave, of Babu Debendra Nath Sarkar, or until further orders.

Cuttack.

POWERS.

No. 1538A.D.—The 10th June 1905.—In exercise of the power conferred by sub-section (1) of section 565 of the Code of Criminal Procedure, 1898, the Lieutenant-Governor is pleased to empower Babu Ramesh Chandra Das, a Magistrate of the first class, in the district of Dacca, to order, at the time of passing sentence of imprisonment on any person referred to in that sub-section, that the residence or change of residence of such person after release shall be notified as provided by the rules made under sub-section (3) of the section.

Dacca.

Babu Ramesh Chandra Das is also vested with powers under sections 110, 133 and 524 of the Code of Criminal Procedure.

No. 1544A.D.—The 10th June 1905.—Mr. C. H. Reid, Officiating Joint-Magistrate, Araria, Purnea, is vested with the power to try summarily the offences mentioned in section 260 of the Code of Criminal Procedure.

Purnea.

R. W. CARLYLE,
Offg. Chief Secy. to the Govt. of Bengal.

APPOINTMENTS AND TRANSFERS.

No. 1858J.D.—The 9th June 1905.—The gentlemen named below are appointed to be Honorary Magistrates of the Sadar Independent Bench, in the district of Pabna:—

Pabna.

Babu Ramesh Chandra Ray. | Babu Hriday Govinda Chowdhury.

No. 1985J.D.—The 12th June 1905.—Babu Ghansham Das and Maulvi Syed Waris Ali are appointed to be Honorary Magistrates of the Gaya Independent Bench in the district of Gaya.

Gaya.

No. 1988J.D.—The 12th June 1905.—Maulvi Khaje Mohammad Reza is appointed to be an Honorary Magistrate of the Bankipore Independent Bench, in the district of Patna.

Patna.

RESIGNATIONS.

No. 1888J D.—The 9th June 1905.—The Lieutenant-Governor accepts the resignation tendered by Babu Mati Lal Roy of his appointment as an Honorary Magistrate of the Kalna Independent Bench, in the district of Burdwan.

Burdwan.

No. 1934J.D.—The 10th June 1905.—The Lieutenant-Governor accepts the resignation tendered by Rai Saheb Bankim Chandra Mazumdar of his appointment as an Honorary Magistrate of the Sadar Independent Bench, in the district of Khulna.

Khulna.

No. 1964J.D.—The 10th June 1905.—The Lieutenant-Governor accepts the resignation tendered by Babu Hari Kishore Roy of his appointment as an Honorary Magistrate of the Dumka Independent Bench, in the district of the Sonthal Parganas.

Sonthal Parganas.

POWERS.

No. 1859J.D.—The 9th June 1905.—The gentlemen named below, who have been appointed to be Honorary Magistrates of the Sadar Independent Bench, in the district of Pabna, are vested with the powers of a Magistrate of the third class:—

Pabna.

Babu Ramesh Chandra Ray. | Babu Hriday Govinda Chowdhury.

Babu Hriday Govinda Chowdhury is also empowered, under section 357, sub-section (2) of the Code of Criminal Procedure, to take down evidence in criminal cases in the English language.

No. 1903J.D.—The 9th June 1905.—Babu Sarat Chandra Khan, an Honorary Magistrate of the Naugaon Independent Bench, in the district of Rajshahi, is vested with the powers of a Magistrate of the second class, and is authorized to sit singly for the trial of cases. He is also empowered, under section 357, sub-section (2) of the Code of Criminal Procedure, to record evidence in criminal cases in the English language.

Rajshahi.

No. 1904J.D.—The 9th June 1905.—Babu Chundra Nath Chowdhry and Babu Okhoy Coomar Bhaduri, Honorary Magistrates of the Sadar Independent Bench, in the district of Rajshahi, are authorized to sit singly for the trial of cases. They are also empowered, under section 357, sub-section (2) of the Code of Criminal Procedure, to record evidence in criminal cases in the English language.

Rajshahi.

No. 1915J.D.—The 10th June 1905.—Babu Nil Kanta Sen, an Honorary Magistrate of the Independent Bench at Jangipur, in the district of Murshidabad, is vested with the powers of a Magistrate of the second class. He is also authorized to sit singly for the trial of such cases as may be made over to him.

Murshidabad.

Under the authority vested in him by section 357, sub-section 2 of the Code of Criminal Procedure, Act V of 1898, the Lieutenant-Governor empowers Babu Nil Kanta Sen to take down evidence in criminal cases in the English language.

No. 1986J.D.—The 12th June 1905.—Babu Ghansham Das and Maulvi Syed Waris Ali who have been appointed to be Honorary Magistrates of the Gaya Independent Bench in the district of Gaya, are vested with the powers of a Magistrate of the third class.

Gaya.

No. 1989J.D.—The 12th June 1905.—Maulvi Khaje Mohammad Reza, who has been appointed to be an Honorary Magistrate of the Independent Bench at Bankipore, in the district of Patna, is vested with the powers of a Magistrate of the second class. He is also authorized to sit singly for the trial of such cases as may be made over to him.

Patna.

Under the authority vested in him by section 357, sub-section 2 of the Code of Criminal Procedure, Act V of 1898, the Lieutenant-Governor empowers Maulvi Khaje Mohammad Reza to take down evidence in criminal cases in the English language.

H. W. C. CARNDUFF,
Offg. Secy. to the Govt. of Bengal.

POLTICAL DEPARTMENT.

NOTIFICATION.

No. 899P.D.—The 7th June 1905.—In exercise of the powers conferred upon him by clause (*a*) of the proviso to sub-section (2) of section 4 of the Chittagong Hill Tracts Regulation, 1900 (I of 1900), and with the previous sanction of the Governor-General in Council, the Lieutenant-Governor of Bengal is pleased to declare that, with effect from the date of this notification, the Cattle Trespass Act, 1871 (I of 1871), shall apply in the Chittagong Hill Tracts.

Chittagong Hill Tracts.

R. W. CARLYLE,
Offg. Chief Secy. to the Govt. of Bengal.

PUBLIC WORKS DEPARTMENT.

ESTABLISHMENT.

The 5th June 1905.

No. 126.—The services of Mr. E. Blaber, Executive Engineer, 3rd grade, are placed at the disposal of the Port Commissioners of Chittagong, with effect from the 6th March 1905.

The 9th June 1905.

No. 129.—Rai Sahib Doorga Charn Chuckerbarti, Assistant Engineer, Northern Drainage and Embankment Division, is granted privilege leave, under article 260 of the Civil Service Regulations, for one month, with effect from the 28th May 1905.

The 13th June 1905.

Corrigendum.—No. 135.—In Bengal Government Notification No. 122, dated 30th May 1905, against the name of Mr. O. C. Lees, *for* "15th September 1905" *read* "15th February 1905."

W. A. INGLIS,
Secy. to the Govt. of Bengal.

ESTABLISHMENT.

The 11th June 1905.

No. 130.—Mr. H. H. Stevens, Assistant Engineer, first grade, is attached to the office of Chief Engineer, with effect from the 12th June 1905, until further orders.

The 13th June 1905.

No. 132.—Babu Gnanesh Chander Bhuttacharjee, Assistant Engineer, third grade, 2nd Calcutta Division, is granted privilege leave for one month, under article 260 of the Civil Service Regulations, with effect from the 4th June 1905, in extension of that granted in Bengal Government Notifications Nos. 108 and 121, dated the 2nd and 25th May, 1905, respectively.

Corrigendum.—No. 134.—With reference to Bengal Government Notification No. 110, dated 8th May 1905, Mr. L. D. Cross, Assistant Engineer, first grade, is posted to the Darjeeling Division, and is appointed to officiate as Executive Engineer of that Division, during the absence, on leave, of Mr. H. H. Green, Executive Engineer, or until further orders.

M. J. SCOBIE,
Offg. Secy. to the Govt. of Bengal.

IRRIGATION DEPARTMENT.

The 13th June 1905.

No. 17.—Notification.—In exercise of the powers conferred on him by sections 99 and 78 of Act III (B.C.) of 1876, the Hon'ble the Lieutenant-Governor of Bengal proposes to make the following alterations and additions in rules 5, 6, 9, 15, 47 and 48 of the Water-rate Rules for the Orissa Canals and in Appendices III and VIII thereto.

W. A. INGLIS,
Secy. to the Govt. of Bengal.

Existing rules.

5. The preliminary application for a lease for a term of years, either new or renewal, may be of an informal nature, but it must be in writing. It may be received either at the Subdivisional or Sectional Canal office: in the latter case, the Sectional Officer shall forward it immediately to the Subdivisional Canal Officer.

The Subdivisional Canal Officer as soon as he has, by personal enquiry or by an enquiry made by the Sectional Officer, satisfied himself that the land in question constitutes a definite block, and that it can be irrigated, shall at once inform the Divisional Canal Officer, giving such particulars as that officer may direct, and shall ask his formal approval to the lease being proceeded with. On receipt of such approval, he shall forward the preliminary application to the zilladar in order that the detailed assessment of the block may be taken in hand. A copy of the map alluded to in rule 4 shall be sent with the application, and this constitutes the basis of the assessment.

Proposed rules.

5. The preliminary application for a lease for a term of years, either new or renewal, may be of an informal nature, but it must be in writing. It may be presented at any time; but if presented after the 1st of April in the year during which the lease is to commence, an additional charge of 1 pice per *goont* of local measure, equivalent to 6 annas 3 pies per mán, will be made for the year following that in which the lease has been applied for.

The Subdivisional Canal Officer shall, at a date not less than three months and not more than six months before the expiry of a lease for a term of years, send a notice in writing to the representative of the cultivators informing him of the fact. Such notice shall request that early intimation may be sent if it is desired to renew the lease, and shall draw attention to the extra charge which will be incurred if the application is presented after the 1st of April.

The preliminary application may be presented either at the Subdivisional or Sectional Canal office. The Subdivisional Canal Officer as soon as he has, by personal enquiry or by an enquiry made by the Sectional Officer, satisfied himself that the land in question constitutes a definite block, and that it can be irrigated, shall at once inform the Divisional Canal Officer, giving such particulars as that officer may direct, and shall ask his formal appoval to the lease being proceeded with. On receipt of such approval, he shall forward the preliminary application to the zilladar in order that the detailed assessment of the block may be taken in hand A copy of the map alluded to in rule 4 shall be sent with the application, and this constitutes the basis of the assessment.

Existing rules.

6. The zilladar on receipt of the application shall depute an amin to prepare the khasra or detailed assessment paper. This shall be done on the ground with the aid of the revenue survey map and khasra. Should the survey map and khasra not be available, the amin shall make a sketch map and shall measure the areas with a chain or measuring-rod.

9. Should it happen that the cultivators of the block proposed for lease are not unanimous, and that certain of them decline to sign the application, the zilladar shall report the matter to the Subdivisional Canal Officer. This officer shall hold a local enquiry, recording the statements of the persons who decline to sign and recording his personal opinion on the reasons given. He shall then send a report to the Divisional Canal Officer, who shall decide if the lease may be accepted, excluding the fields in the occupation of the persons who decline to sign or whether the lease shall be declined. The Divisional Canal Officer is authorized to grant a lease when not less than 95 per cent. of the net irrigable area of the block has been signed for. In particular cases should it be desirable to grant a lease even though an area larger than 5 per cent. of the block has not been signed for, this may be done on the written order of the Superintending Engineer. The reasons for granting the lease shall be fully recorded.

15. Applicants for a lease for a term of years or for a season lease for the irrigation of autumn rice who may require water before the lease has been concluded can obtain a supply on tendering an application for a provisional lease in the form given as Appendix No. III to these rules. This application must be signed in the presence of the Sectional Officer or of some other responsible officer nominated for the purpose by the Subdivisional Canal Officer. The signatures should be those of the leading cultivators in the block in question, and they should represent holders of not less than 75 per cent. of the irrigable land within the block.

As soon as the Subdivisional Canal Officer receives the application duly signed, he shall issue a permit in the form given as Appendix No. VIII to these rules, and shall at once supply water.

47. The chaukidar of the village or such other representative as, with the consent of a majority of the lessees and with the approval of the Subdivisional Canal Officer, may be appointed for the purpose by the Deputy Collector, or other officer in charge of the Revenue

Proposed rules.

6. The zilladar on receipt of the application hall depute an amin to prepare the khasra or detailed assessment paper. This shall be done on the ground with the aid of the revenue survey map and khasra. Should the survey map and khasra not be available, the amin shall make a sketch map and shall measure the areas with a chain or measuring-rod.

The amin shall write out daily in the form provided for the purpose abstracts for each cultivator of the entries in the khasra relating to lands in his occupation and shall deliver such abstracts, to the representative for distribution.

9. On the 1st December of each year, or on any subsequent date, the Divisional Canal Officer may decline to proceed with a lease for a term of years the application for which has not been fully signed by that date. Provided that the form of application shall have been tendered to the cultivators through their representative for signature after the adjustment of any matters in dispute with regard to classification or area of land not less than 15 days before the 1st December or subsequent date. Any provisional lease covering the same lands on which a supply of water may have been granted pending the completion of the lease for a term of years shall then become the substantive lease for the season and shall be put in force.

9A. Should it happen that the cultivators of the block proposed for lease are not unanimous, and that certain of them decline to sign the application, the zilladar shall report the matter to the Subdivisional Canal Officer. This officer shall hold a local enquiry, recording the statements of the persons who decline to sign and recording his personal opinion on the reasons given. He shall then send a report to the Divisional Canal Officer, who shall decide if the lease may be accepted, excluding the fields in the occupation of the persons who decline to sign or whether the lease shall be declined The Divisional Canal Officer is authorised to grant a lease when not less than 95 per cent. of the net irrigable area of the block has been signed for. In particular cases should it be desirable to grant a lease even though an area larger than 5 per cent. of the block has not been signed for, this may be done on the written order of the Superintending Engineer The reason for granting the lease shall be fully recorded.

15. Applicants for a lease for a term of years or for a season lease for the irrigation of autumn rice who may require water before the lease has been concluded can obtain a supply on tendering an application for a provisional lease in the form given as Appendix No. III to these rules. This application must be signed in the presence of the Sectional Officer or of some other responsible officer nominated for the purpose by the Subdivisional Canal Officer.

As soon as the Subdivisional Canal Officer receives the application duly signed, he shall issue a permit in the form given as Appendix No. VIII to these rules, and shall at once supply water.

47. Before any lease other than a special lease for *dalwa* rice provided for in rule 19 is entered into, the Deputy Collector or other officer in charge of the Revenue Division shall select as representative of the cultivators a person or persons who must have a direct interest in

Existing rules.

Division, in consideration of his giving assistance in the matters noted below, shall be entitled to free irrigation of lands in his own occupation which may be within the boundaries of a block leased for a term of years, or to which water is supplied under a season lease other than a special lease for *dalua* rice provided for in rule 19, subject to a limit of 3 per cent. on the total area assessed:—

(*i*) In assisting the amin while preparing the assessment papers for land, which it is proposed to lease for a term of years, or for lands which have been irrigated under season leases.

(*ii*) In procuring and attesting the signatures to the applications for long leases or for season leases for rice.

(*iii*) In receiving the individual notices of amounts assessed, and in distributing them to the persons concerned.

(*iv*) In attending when required at enquiries into complaints.

(*v*) In giving information to the Subdivisional or sectional officers regarding any insufficiency of the supply of water or of any misuse of the supply of water.

(*vi*) In giving information to the zilladar with respect to alterations in the occupancy of lands under lease for a term of years.

(*vii*) In assisting the tahsildar in collecting the rates.

48. The chaukidar or other representative shall only be entitled to the free irrigation if he renders the assistance required to the best of his ability. It shall be within the discretion of the Deputy Collector or other officer in charge of the Revenue Division to disallow the free irrigation and to recover the rates from the chaukidar or other representative for reasons duly recorded in writing.

Proposed rules.

the land covered by the lease. The selection shall be made with the consent of a majority of the cultivators having an interest in the lease, and in consultation with the Subdivisional Canal Officer The person or persons so selected shall continue as representative for the village unless he or they resign the office, or unless the Deputy Collector or other officer in charge of the Revenue Division shall, for reasons recorded in writing, remove him or them from the office.

47A. The person or persons so selected are required to give assistance in respect of the following matters:—

(1) To assist the amin while preparing the assessment papers.

(2) To assist in procuring and to attest the signatures to applications for leases.

(3) To receive and to distribute to the persons concerned the individual notices of amounts charged.

(4) To attend and to assist at enquiries into complaints.

(5) To give information to the Subdivisional Officer or to the Sectional Officer of any insufficiency in the supply of water or of any misuse of the water.

(6) To give information to the zilladar with respect to alterations in the occupancy of lands under a lease for a term of years.

(7) To assist the tahsildar in collecting the rates.

48. For such assistance the representative or representatives shall be entitled to the free irrigation of lands in his or in their own occupation which may lie within the lands covered by the lease, subject to a total limit of 3 per cent of the area assessed.

The Deputy Collector or other officer in charge of the Revenue Division may, for reasons recorded in writing, disallow in whole or part such free irrigation, and may recover the rates which would otherwise have been charged, if the assistance required by rule 47A has not been rendered to the best of the ability of the representative or representatives.

SCHEDULE OF RATES.

1. On a lease for a term of years for the irrigation of all crops on the land leased (supply of water given from 16th June to 31st March in each year)—

	Per mán. Rs. A. P.
For leases executed prior to 30th June 1902	1 8 0
For leases executed from 1st July 1902	1 12 0

2. For such lands included in a lease for a term of years as may be classified by the Canal Officer under rule 3 as only deriving material benefit in seasons of short rainfall ... ... Rs. 0-8-0

These rates fall due on the 1st February of each year.

1. On a lease for a term of years for the irrigation of all crops on the land leased (supply of water given from 16th June to 31st March in each year)—

	Per mán. Rs. A. P.
For leases executed prior to 30th June 1902	1 8 0
For leases executed from 1st July 1902	1 12 0

2. For such lands included in a lease for a term of years as may be classified by the Canal Officer under rule 3 as only deriving material benefit in seasons of short rainfall ... ... Rs. 0-8-0

These rates fall due on the 1st February of each year.

Provided that in all cases in which the preliminary application for the lease has been presented on any date subsequent to the 31st of March of the year during which the lease is to commence, an additional charge of one pice per *goont* equivalent to 6 annas 3 pies per mán shall be made on all lands in the lease for the year subsequent to that from which the lease commences.

EXISTING.

APPENDIX III

APPLICATION FOR SUPPLY OF WATER PRIOR TO CONCLUSION OF {____ * a lease for a term of ____ years / a season lease for autumn (Sarad) rice.}

We, being principal cultivators of Mauza Pargana on our own behalf and on behalf of the other cultivators of the Mauza, hereby certify that we have presented an application for the grant of {____ * a lease for a term of ____ years / a season lease for autumn (Sarad) rice} to cover all the irrigable* land in a block situated in Mauza the area of which is approximately Máns. The boundaries of the block are shown in the attached sketch map, and are as specified below.

Now in order that we may obtain a supply of water at once and before the {____ * lease for a term of ____ years / season lease for autumn (Sarad) rice} can be concluded, we whose signatures or marks are annexed below severally and jointly bind ourselves to pay the water rate on the whole area within the limits of the block as specified which may be determined by the Canal Officer to be irrigable: Provided that those fields which, under the existing conditions of cultivation, do not, in this season, require a supply of water, shall be exempted though classed as irrigable. We agree that under any circumstances the area to be charged for under this application shall be not less than Máns. In the event of {____ * a lease for a term of ____ years / a season lease for autumn (sarad) rice} not being concluded through the default or the non-consent of any of the cultivators of irrigable lands within the block, a rate of Rs 3 per Mán on the area determined as irrigable and as liable to be charged for in the present season will be charged to us and will be payable by us on or before the 1st of February next. Water to be supplied up to 30th November only.

In token of our obligation in this agreement, we annex our signatures or marks below.

Dated *189* .

Boundary—North

East

South

West

Signature of applicant.	Date.	Signature of applicant.	Date.

Certified that the total approximate area of the block as ascertained by local enquiry is acres, and signatures of persons cultivating about per cent. of the whole area have been taken on this, and these are to my knowledge genuine.

* *Note.*—One or other to be scored through as may be proper.

Date

Signature of Sectional Officer.

PROPOSED.

APPENDIX III.

APPLICATION FOR SUPPLY OF WATER PRIOR TO CONCLUSION OF { * a lease for a term of ____ years / a season lease for autumn (Sarad) rice. }

We, being cultivators of Mauza Pargana hereby certify that we have presented an application for the grant of { * a lease for a term of ____ years / a season lease for autumn (Sarad) rice } to cover all the irrigable land in a block situated in Mauza the area of which is approximately Máns. The boundaries of the block are shown in the attached sketch map, and are as specified below.

Now in order that we may obtain a supply of water at once and before the { * lease for a term of ____ years / season lease for autumn (Sarad) rice } can be concluded, we whose signatures or marks are annexed below severally bind ourselves to pay the water-rate on our holdings within the limits of the block as specified which may be determined by the Canal Officer to be irrigable: Provided that those fields which, under the existing conditions of cultivation, do not, in this season, require a supply of water, shall be exempted though classed as irrigable. We agree that under any circumstances the area to be charged for under this application shall be not less than Máns as specified by each of us below. In the event of { * a lease for a term of ____ years / a season lease for autumn (Sarad) rice } not being concluded through the default or the non-consent of any of the cultivators of irrigable lands within the block, a rate of Rs. 3 per Man on the area determined as irrigable and as liable to be charged for in the present season will be charged to us and will be payable by us on or before the 1st of February next. Water to be supplied up to 30th November only.

In token of our obligation in this agreement, we annex our signatures or marks below.

Dated *189* .

Boundary—North

East

South

West

Area declared by applicant.		Signature of applicant	Date.	Signature of applicant.	Date.
Máns.	Goonts.				

Certified that the total approximate area of the block as ascertained by local enquiry is acres, and that the signatures of the persons taken on this are to my belief genuine.

* *Note*.—One or other to be scored through as may be proper.

Date

Signature of Sectional Officer.

Signature of Representative of Cultivators.

EXISTING.

APPENDIX VIII.

PERMIT FOR SUPPLY OF WATER PENDING COMPLETION OF LEASE FOR A TERM OF YEARS OR OF SEASON LEASE FOR RICE IRRIGATION.

To

of Village Pargana

WHEREAS you have applied for a supply of water which is required at once and before the {*lease for a term of years / season lease for rice irrigation} for which you have applied can be concluded and whereas you have agreed on condition of obtaining a supply of water that you whose names are recorded above will be severally and jointly responsible for the water rates which may be due on the full irrigable area of the block, the area of which is approximately Máns and the boundaries of which are shewn in the attached sketch map and are as specified below: Provided that those fields which under the conditions of cultivation of the present season do not in this season require a supply of water, shall be exempted though classed as irrigable. Further provided that as agreed by you, under any circumstances the area to be charged for under this lease shall not be less than Máns.

This is to inform you that water will now be supplied to the block from the Distributary Canal and the supply will be continued as required up to 30th November next. Your responsibility under the terms of your application will remain until the {*lease for a term of years / season lease for rice irrigation} is concluded when it will cease. In the event of the {*lease for a term of years / season lease for rice irrigation} not being concluded, through the default or non-consent of any of the cultivators of irrigable lands within the block, you will under the terms of your application be liable severally and jointly for a rate of Rs. 3 per Mán on the full irrigable area of the block subject to the provisos above, and on the 1st February next or on any subsequent date you may severally or jointly be called on by the Deputy Collector or other officer in charge of the Revenue Division to pay the full amount.

Bounaary—North

South

East

West

* *Note.*—One or other to be scored through as may be proper.

Signature of Subdivisional Canal Officer.

PROPOSED.

APPENDIX VIII.

PERMIT FOR SUPPLY OF WATER PENDING COMPLETION OF LEASE FOR A TERM OF YEARS OR OF SEASON LEASE FOR RICE IRRIGATION.

To

of Village Pargana

WHEREAS you have applied for a supply of water which is required at once and before the {* lease for a term of ___ years / season lease for rice irrigation} for which you have applied can be concluded and whereas you have agreed on condition of obtaining a supply of water that you whose names are recorded above will be severally responsible for the water rates which may be due on your holdings in the full irrigable area of the block, the area of which is approximately Máns and the boundaries of which are shewn in the attached sketch map and are as specified below: Provided that those fields which under the conditions of cultivation of the present season do not in this season require a supply of water, shall be exempted though classed as irrigable. Further provided that as agreed by you, under any circumstances the area to be charged for under this lease shall not be less than Máns.

This is to inform you that water will now be supplied to the block from the Distributary Canal and the supply will be continued as required up to 30th November next. Your responsibility under the terms of your application will remain until the {* lease for a term of ___ years / season lease for rice irrigation} is concluded when it will cease. In the event of the {* lease for a term of ___ years / season lease for rice irrigation} not being concluded, through the default or non-consent of any of the cultivators of irrigable lands within the block, you will under the terms of your application be liable severally for a rate of Rs. 3 per Mán on your holdings in the full irrigable area of the block subject to the provisos above, and on the 1st of February next or on any subsequent date you may severally be called on by the Deputy Collector or other officer in charge of the Revenue Division to pay the amount due on your respective holdings.

Boundary—North

South

East

West

* *Note.*—One or other to be scored through as may be proper.

Signature of Subdivisional Canal Officer.

[Second Publication.]

The 6th June 1905.

No. 16.—Notification.—It is hereby notified for general information that the Lieutenant-Governor of Bengal proposes, under the provisions of sections VI and XI of Act V (B.C.) of 1864, to make the following addendum to the schedule of tolls in force on the Calcutta Canals and Tolly's Nala and published in Notification No. 144, dated the 23rd May 1893.

W. A. INGLIS,
Secy. to the Govt. of Bengal.

13.—During neap-tides, when there is not sufficient water in the Tolly's Nala near Russa for the navigation of boats laden with firewood, they will be allowed to proceed to or from the river Biddiadharee through the Circular Canal on payment of a rate of eight annas per 100 maunds of measured maundage for passage through that canal in addition to the rate ordinarily payable for entering or plying in Tolly's Nala.

For purposes of reckoning demurrage charges under item No. 11 of the schedule, two extra days will be allowed over and above those provided for vessels plying on the Tolly's Nala.

Boats plying under this concession will not be allowed either to load or to unload along the Circular Canal or river Hooghly. Infringement of this rule will render the boats liable to the ordinary tolls in force for the Circular Canal.

RAILWAY DEPARTMENT.

The 13th June 1905.

No. 23R.—Notification—Whereas it appears to the Lieutenant-Governor of Bengal that land is likely to be required to be taken by Government at the public expense for a public purpose, viz., for a railway siding from Naihati Station, Eastern Bengal State Railway, to Naihati Mill on the Hooghly, passing through the villages of Naihati, Garipha and Persadnagar, in the district of 24-Parganas, it is hereby notified that, under the provision of section 4 of Act I of 1894, a survey party or parties will commence work shortly; and that in exercise of the powers conferred by the abovementioned section, the Lieutenant-Governor has authorised the Engineer for the time being engaged in the undertaking to enter upon and survey and do all other acts required for the proper execution of this work as provided or specified in the said section.

This notification is made, under the provisions of section 4 of Act I of 1894, to all whom it may concern.

W. A. INGLIS,
Secy. to the Govt. of Bengal.

MARINE DEPARTMENT.

The 10th June 1905.

No. 63Marine.—Intimation having been received of the outbreak of plague in Bahrein in the Persian Gulf, it is hereby notified for general information that the place is declared an infected port, and that the regulations for the prevention of the introduction of plague by sea, issued by this Government, will be enforced in the ports of Orissa and Chittagong against vessels arriving from that port.

W. A. INGLIS,
Secy. to the Govt. of Bengal.

The 12th June 1905.

No. 64Marine.—In continuation of Notification No. 57Marine, dated the 16th May 1905, it is hereby notified that Commander W. B. Beauchamp, R.I.M., is appointed to officiate as Shipping Master of the Port of Chittagong, during the absence, on leave, of Mr. E. Good, or until further orders, and with effect from the date on which he joins the appointment.

W. A. INGLIS,
Secy. to the Govt. of Bengal.

PUBLIC WORKS DEPARTMENT.

ESTABLISHMENT.

The 8th June 1905.

No. 128.—Mr. G. Caw, Sub-Engineer, third grade, Arrah Division, is granted privilege leave for one month, under Article 260 of the Civil Service Regulations, with effect from the afternoon of the 13th May 1905.

The 13th June 1905.

No. 131.—The following promotions are made in the Upper Subordinate Establishment with effect from the 22nd March 1905:—

Name.	From—	To—	Nature of promotion.	Division in which employed.
Mookerjee, Khirode Chundra.	Supervisor, 2nd grade	Supervisor, 1st grade	Temporary ...	Chota Nagpur.
Roy, Jotindra Nath	Overseer, 1st grade ...	Supervisor, 2nd grade	Ditto ...	Darjeeling.

The 13th June 1905.

No. 133.—Babu Bidhu Bhusan Trivedy, Overseer, 1st grade, and Toll-collector, Hanskhally, Nadia Rivers Division, is granted privilege leave for three months, under article 260 of the Civil Service Regulations, combined with furlough for 21 months under article 338 of the same Regulations.

W. A. INGLIS,
Chief Engineer.

SUBORDINATE CIVIL SERVICE.

No. 2921A.

No. 1499A.D.—The 9th June 1905.—Maulvi Syed Khalil Ahmad, substantive *pro tempore* Sub-Deputy Collector, under orders of transfer to Kishorganj, Mymensingh, is allowed leave for one month, under article 242 (*a*) of the Civil Service Regulations, with effect from the afternoon of the 20th May 1905.

Mymensingh.

No. 1515A.D.—The 10th June 1905.—Babu Radhakrishna Goswami, Sub-Deputy Collector, is posted to the head-quarters station of the Midnapore district, and is vested with the powers of a Magistrate of the third class, on being relieved of his Settlement duties in the Backergunge district.

Backergunge. Midnapore.

No. 1532A.D.—The 10th June 1905.—Under the authority vested in him by section 357, sub-section (2), of the Code of Criminal Procedure, Act V of 1898, the Lieutenant-Governor empowers Babu Abani Kumar Sen, substantive *pro tempore* Sub-Deputy Magistrate, Narayanganj, Dacca, to take down evidence in criminal cases in the English language.

Dacca.

No. 1534A.D.—The 10th June 1905.—Under the authority vested in him by section 357, sub-section (2), of the Code of Criminal Procedure, Act V of 1898, the Lieutenant-Governor empowers Babu Radhika Lal De, substantive *pro tempore* Sub-Deputy Magistrate, Mymensingh, to take down evidence in criminal cases in the English language.

Mymensingh.

No. 1536A.D.—The 10th June 1905.—Under the authority vested in him by section 357, sub-section (2), of the Code of Criminal Procedure, Act V of 1898, the Lieutenant-Governor empowers Maulvi Abul Khair Kaiseruddin Ahmed, substantive *pro tempore* Sub-Deputy Magistrate, Faridpur, to take down evidence in criminal cases in the English language.

Faridpur.

Nos. 1566-67A.D.—The 13th June 1905.—The gentlemen named below are appointed substantively *pro tempore* to the fifth grade of Sub-Deputy Collectors and are posted to the Presidency Division:—

Presidency Divn.

Maulvi Abdul Ghaffar, B.A. | Babu Surendra Nath Banerjea, B.A.

They are also vested with the powers of a Magistrate of the third class.

R. W. CARLYLE,
Offg. Chief Secy. to the Govt. of Bengal.

REGISTRATION DEPARTMENT.

No. 392P.D.—The 6th June 1905.—Maulvi Syed Azizur Rahman, Rural Sub-Registrar of Dalsingh Sarai, in the district of Darbhanga, is appointed to be Rural Sub-Registrar of Samastipur, in the same district.

Darbhanga.

No. 395P.D.—The 6th June 1905.—Babu Umesh Chandra Chakravarti, Rural Sub-Registrar of Debra, in the district of Midnapore, is appointed to be Rural Sub-Registrar of Ghatsila, in the district of Singhbhum.

Midnapore. Singhbhum.

No. 396P.D.—The 6th June 1905.—Babu Kedar Nath Mittra, Rural Sub-Registrar of Singhbhum. Ghatsila, in the district of Singhbhum, is appointed to be Rural Sub-Rgistrar of Debra, in the district of Midnapore. Midnapore.

R. W. CARLYLE,
Offg. Chief Secy. to the Govt. of Bengal.

CIVIL MEDICAL DEPARTMENT, BENGAL.

No. 1180D.—Dated Darjeeling, the 6th June 1905.—Third-grade Assistant Surgeon Sureswar Sarkar is appointed as a House Physician, Medical College Hospital, Calcutta, *vice* third-grade Assistant Surgeon Devendra Nath Ghosh.

No. 1183D.—Dated Darjeeling, the 6th June 1905.—Third-grade Assistant Surgeon Devendra Nath Ghosh is appointed to do supernumerary duty at the Medical College Hospital, Calcutta, until further orders.

No. 1187D.—Dated Darjeeling, the 6th June 1905.—Third-grade Assistant Surgeon Khetra Gopal Mukherjee is appointed to do supernumerary duty at the Cuttack General Hospital until further orders.

No. 1259D., dated Darjeeling, the 9th June 1905.—Senior Assistant Surgeon Kasi Nath Ghosh is appointed to the Arambagh subdivision and Dispensary in the Hughli district, *vice* third-grade Assistant Surgeon Premananda Das, transferred.

No. 1263D., dated Darjeeling, the 9th June 1905.—Third-grade Assistant Surgeon Premananda Das is appointed to do supernumerary duty at the Medical College Hospital, Calcutta, until further orders.

S. H. BROWNE, M.D., COL., I.M.S.,
Inspector-General of Civil Hospitals, Bengal.

TREASURY NOTICE.

UNCOVENANTED DEPUTY COLLECTOR SAHIBZADA WALI MAHOMED SHAH is placed in charge of the Muzaffarpur Treasury, and authorized to draw bills on other Treasuries.

P. C. LYON, *Commissioner.*

PATNA COMMR.'S OFFICE, BANKIPUR, *the 8th June 1905.*

Sheriff's Office, the 31st May 1905.

NOTICE is hereby given that the Third Criminal Sessions of the year 1905 of the High Court of Judicature at Fort William in Bengal, for the Town of Calcutta and Factory of Fort William, and the places subordinate thereto, will be held at the Court-house, in the Town of Calcutta, on Monday, the third day of July next, at 11 o'clock in the forenoon, and thenceforward from day to day until the said Sessions be over. And it is hereby proclaimed that all persons who are to prosecute any of the prisoners to be brought up for trial at the said Sessions be present then and there to prosecute.

E. CABLE, *Sheriff.*

সরিফ আফিস, সন ১৯০৫ সাল তারিখ ৩১শে মে।

সকলকে সমাচার দেওয়া যাইতেছে যে যুবে বাঙ্গালার কোর্ট উইলিয়ম দুর্গের অধীন শহর কলিকাতায় ও অন্যান্য স্থানের কৌজদারী বিচার নিষ্পত্তি জন্য আগামী সন ১৯০৫ সালের ৩রা জুলাই সোমবার বেলা ১১ ঘটিকার সময় এবং যে পর্য্যন্ত সেশিয়ানের কার্য্য শেষ না হয় প্রতিদিন উক্ত সময়ে কলিকাতার হাইকোর্টের আপন আদালত ঘরে সন ১৯০৫ সালের তৃতীয় ক্রিমিনেল সেশিয়ান বসিবেক এবং এতদ্দ্বারা প্রচার করা যাইতেছে যে, যে সকল ব্যক্তি কোন করেদির বিরুদ্ধে কৌজদারী মিছিল করিবেক তাহারা উক্ত স্থানে উক্ত সময়ে হাজির থাকিয়া মোকদ্দমা করে ইতি।

ই: কেবল, সরিফ।

SMALL CAUSE COURT NOTICE.

NOTIFICATION.

NOTICE is hereby given, under section 7 of Act IX of 1887, that the Judge of the Courts of Small Causes at Dacca and Munshiganj will, in the month of July 1905, sit in those Courts on the undermentioned dates:—

Dacca Small Cause Court—5th, 7th 11th, 14th 26th and 28th of July 1905.
Munshiganj Small Cause Court—from 17th to 22nd of July 1905.

SRI GOPAL CHATTERJI,
Judge, Small Cause Court.

DACCA SMALL CAUSE COURT,
The 10th June 1905.

EDUCATION DEPARTMENT, BENGAL.

Subordinate Educational Service.

The 4th June 1905.—Babu Adhar Lal Datta, Head Draftsman and Estimator, Civil Engineering College, Sibpur (class VI), is allowed leave of absence for one month, under article 260 of the Civil Service Regulations, with effect from the 16th May 1905.

The 8th June 1905.—Babu Dwarka Nath Das, Head Clerk, office of the Inspector of Schools, Rajshahi Division (class VII), having returned to duty on the forenoon of the 24th May 1905, the unexpired portion of the leave granted to him under the orders of the 10th March 1905 is cancelled.

The following reversions are sanctioned consequent on the return to duty of Babu Dwarka Nath Das, Head Clerk, office of Inspector of Schools, Rajshahi Division, on the forenoon of the 24th May 1905:—

(1) Maulvi Muhammad Irfan, M.A., Assistant Master, Anglo-Persian Department, Calcutta Madrasah, from class VII to class VIII.
(2) Babu Sarat Chandra Chakravarti, a Clerk in the office of the Inspector of Schools Rajshahi Division, from class VIII to Rs. 40 a month.

The 10th June 1905.—Babu Ram Prasad, B.A., an Assistant in the office of Director of Public Instruction, and now Officiating Assistant Head Master in the Patna Training School (class VIII), is appointed to be an Assistant Master in the Patna Training School, *vice* Babu Basanta Kumar Mitra, transferred, but he will continue to act as Assistant Head Master of that institution, during the absence, on deputation, of Babu Sarat Chandra Brahmachari, or until further orders.

V. H. JACKSON,
Asst. Director of Public Instruction, Bengal, in charge

NOTIFICATION.

AN examination in the knowledge of English idiom and in pronunciation for teachers of English in Native schools will be held at the office of the Inspector of European Schools 12, Dalhousie Square, East, on Tuesday, the 4th July 1905, at 11 A.M.

Teachers who intend to present themselves for examination should send (at least a week before the examination) a statement containing the following information, and should also *bring* with them their University certificates on the day of the examination:—

Name (in full).	Last University examination passed.
Name of father (in full).	Year of passing.
Name of native village and district.	Signature of the applicant.

Designation and full address.

Candidates should also state whether they have sat for this examination before, and, if so, how often, giving dates.

CALCUTTA,
The 7th June 1905.

W. W. HORNELL,
Inspector of European Schools, Bengal.

CIVIL ENGINEERING COLLEGE, SIBPUR.

AGRICULTURAL DEPARTMENT.

HIGHER AGRICULTURAL CLASS.

[Session 1905-1906.]

Rules for admission.

FOR admission to the Higher Agricultural Class, an applicant must have one of the following qualifications:—

(i) He must have passed the F.E. Examination of the Calcutta University, and be under 23 years of age, but no student will be allowed to join the Agricultural class after the expiration of five years from admission into the Engineering College.

(ii) He must have passed the B.A. Examination of the Calcutta University by the B. course, or possess other sufficient educational qualifications; be under 23 years of age, and, in addition, have received a nomination from the Bengal Government.

(iii) He must have had a general education qualifying him to follow the instruction in the Higher Agricultural Class, and must also receive a nomination from Government for admission as a special student. To be eligible for a nomination under this rule, a candidate must either have landed property of his own, or be recommended by some influential landholder who desires to train him to take part in the management of his estate, or he must otherwise satisfy Government that he intends to make practical use of his agricultural training. Students entering under this rule will be termed Special Agricultural students. They will not be subject to any maximum limit of age, but will not be entitled to the privileges conferred on passed students under rules 12 and 13, even though they should obtain fully-signed diplomas in due course after passing the necessary examinations.

Every candidate for admission to this Department must apply in writing to the Principal not later than the 14th July. The form of application for a nomination, which must be addressed to the Principal, is given in Appendix B. In the event of the form not being properly filled up and accompanied by the necessary certificates, no notice will be taken of the application.

The number to be nominated each year will depend on the accommodation available.

Every applicant, not already a student of the College, must undergo a medical examination by the College Surgeon before admission to this Department. If this officer's report is unsatisfactory, the applicant will not be admitted.

The session begins on the first Monday in November. All students are required to join the College on that day. Any student prevented by sickness from attending on the opening day must produce a certificate to that effect from a Civil or Assistant Surgeon, failing which he will be liable to a fine not exceeding Rs. 10. No student will be admitted or re-admitted to the College after the month of November, except by special orders of the Director of Public Instruction. This permission will only be given under exceptional circumstances.

COURSE OF INSTRUCTION.

The course of instruction in the Higher Agricultural Class will extend over two academic years.

SCHOLARSHIPS.

Senior scholarships awarded in the Engineer Department are tenable in the Agricultural Department.

One graduate scholarship of Rs. 30 a month, tenable for one year, will be awarded on the result of the examination held at the end of the first academic year.

APPOINTMENTS.

Two appointments annually are assigned to students holding a fully-signed diploma: one in the Provincial Executive Service and one in the Subordinate Executive Service. The right of selection for these appointments will rest with Government, and the students who gained the highest marks at the examination for diplomas will not necessarily be selected.

ENTRANCE AND TUITION FEES.

Each student in the Higher Agricultural Department will be required to pay an *admission fee* of Rs. 10.

F.E.'s who elect to join the Agricultural Department immediately after passing the F.E. Examination are exempted from the payment of this fee, as their names are already borne on the College books.

For the present no tuition fees will be charged to students in the Agricultural Department, except in the case of those joining as special students under rule 3 (iii). The tuition fees for these students will be Rs. 8 a month.

Further particulars may be obtained free on application to the Principal.

SIBPUR,
The 7th June 1905.

A. MACDONELL,
Offg. Principal, Civil Engineering College.

EDUCATIONAL.

Pleadership and Mukhtarship Examinations.

THE following is a list of candidates who have passed the Mukhtarship Examination, held on the 8th and 9th March 1905 :—

4. Mohini Mohan Biswas.
12. Sasi Kumar Guha.
14. Priya Nath Mukherji.
16. Amrita Lal Guha.
17. Hira Lal Basu.
22. Suryya Narayan Datta.
24. Gobinda Chandra Madak.
28. Chandra Kumar Chaudhuri.
29. Radha Raman Mukherji.
30. Manmatha Nath Roy.
31. Muhammad Mustaq Ali.
32. Naseeruddin Khan.
33. Lakshman Prasad.
35. Nand Kisor Prosad.
37. Ram Lal.
44. Parmeswar Chandra Sinha.
45. Jaygobind Lal Das.
47. Monohar Lal Das.
50. Ganes Prasad.
53. Asutosh Sarkar.
54. Ambika Prasad.
55. Sitala Prasad.
59. Prabodh Chandra Mukhopadhyay.
65. Upendra Nath Das.
66. Khagendra Nath Majumdar.
67. Prasanna Kumar Bandhu.
71. Rames Chandra Datta.
75. Nur Muhammad.*
76. Kamini Kumud Sen.
79. Gopal Krishna Sil.
81. Mrityunjoy Chatterji.
89. Sarat Ranjan Sarkar.
90. Ram Lal Mukherji.
91. Sasi Mohan De.
92. Gunanidi Mahapatra.
94. Kedar Nath Roy.
96. Bhagabat Panigrahi.
98. Mukund Prosad Das.
100. Bipra Nath Chakrabarti.
101. Ras Bihari Goswami.
104. Rebati Mohan Ghosh.
105. Asvini Kumar Chakrabarti.
107. Guru Nath Chakrabarti.
108. Umes Chandra Bandyopadhyay.
111. Akhil Chandra Chakrabarti.
115. Kamini Kanta Chakrabarti.
116. Akshay Kumar De.
117. Sita Nath Chaudhuri.
124. Joges Chandra Guha.
126. Hara Chandra Pal.
127. Jogendra Chandra Das.
128. Dines Chandra Chakrabarti.
138. Digindra Prasad Ghosh.
140. Joges Chandra Datta.
142. Mati Lal Ghosh.
143. Manmatha Nath Ghosh.
146. Khagpat Narayan.
148. Kedar Nath.
151. Shyam Lal.
152. Badri Nath.
153. Muhammad Tawqir Ahmed.
155. Lachhmi Narayan.
156. Ganga Prasad.
157. Narsingh Sahay.
160. Sures Chandra Chatterji.
161. Muhammad Abdul Huq Khan.
162. Mahadeva Lal.
165. Prabhu Narayan.
176. Tara Prasanna Bhattacharyya.
183. Dakhinapada Mukherji.
184. Gauridas Nag.
189. Satis Chandra Banerji.
193. Nawabuddin Ahmed.
194. Ejeluddin Sheikh.
196. Ramani Kanta Mukherji.
198. Bihari Lal Chatterji.
201. Hrishi Kes Sen.
202. Hem Chandra Dutta.
204. Ajodhya Ram Ray.
206. Manmatha Nath Sen.
208. Kailas Chandra Das.
210. Bharat Chandra Bhunia.
217. Ganes Chandra Sarkar.
218. Jogendra Nath Brahma.
222. Jotindra Nath Mazumdar.
223. Kisori Mohan Das.
224. Sheikh Naibuddin.
225. Bhajahari Chakrabarti.
226. Hari Charan Kormakar.
228. Surendra Nath Chakrabarti.
229. Rukmini Mohan Ghosh
234. Jogendra Kisor Bhattacharyya.
235. Nityananda Dhar.
237. Rup Nath Mazumdar.
239. Mukunda Dayal Nag.
240. Jogesh Chandra Barman Roy.
241. Hemendra Chandra Roy.
242. Ramani Mohan Ghosh.
249. Kailas Chandra Biswas.
250. Durgadas Chakrabarti.
251. Prakas Chandra Sinha.*
252. Sarada Kumar Sen.
254. Abdur Rahman.
255. Chinta Haran Bhattacharyya.
256. Rames Chandra Saha.
257. Harendra Lal Banerji.
260. Braja Gopal Bhattacharyya.
261. Birendra Nath Roy.
262. Ram Chandra Chatterji.
269. Sri Kumar Chatterji.
270. Abdul Gaffur.
271. Khodadad Khan.
273. Asutosh Sarkar.
278. Ram Kishan Lal.
284. Kuldip Narayan.
285. Ambika Prosad.
287. Naraish Prosad Varma.
291. Raghubar Dayal.
293. Shaikh Zafiruddin Ahmad.
294. Saheb Raza Khan.
297. Muhammad Shukrullah.
298. Syed Nazirul Hasan.
300. S. Q. A. Balkhi.
301. Muhammad Abdul Karim.
302. Abdul Kuddus.
304. Mahabir Prosad.
305. Syed Ali Khan.
308. Aghor Nath Maitra.
309. Ram Lal Pramanik.
318. Ram Lal Sen.
320. Moghuad Saha.
321. Rajani Kanta Das.

322. Chandra Sekhar Saha.
323. Binod Bihari Das.
325. Surendra Lal Ray.
326. Kamalbas Lal.
330. S. Fazilat Hossain.
332. Barada Prasanna Ghosh.
334. Gauri Charan Maitra.
335. Satis Chandra Chakrabarti.
336. Satis Chandra Banerji.
338. Satis Chandra Goswami.
343. Umes Chandra Pal.
344. Muhammad Ebrahim.
346. Lalit Mohan Ray.
347. Manohar Ray.
349. Surath Kumar Ghosh.
352. Bireswar Prosad.
353. Krishna Deva Narayan.
354. Syed Md. Abdul Wadud.
355. Ram Awatar Sahay.
358. Bansidhar.
359. Ambika Prosad.
360. Ram Lal.
362. Sheo Bhajan Lal.
365. Braj Bihari Tewari.
366. Sukdeo Narayan.
368. Akshoya Kumar.
370. Ganesh Prosad.
372. Harihar Prosad.
376. Mathura Prasad.
379. Raghu Nandun Prasad.
382. Sital Prasada.
383. Syed Atayet Ahmad.
384. Turant Prasad.
385. Vaman Prasad.
387. Sachindra Chandra Gupta.
388. Krishna Kumar De.
389. Kshirod Chandra Dutta.
390. Kailas Chandra Deb.
394. Abdul Aziz.*
395. Abdur Razak Chaudhuri.*
396. Barada Charan Dutta.*
397. Jogendra Kisor Chaudhuri.*
398. Bharat Chandra Das.*
401. Ayat Ulla.*
404. Ras Bihari Das.*
405. Satis Chandra Das.*
406. Baikuntha Nath Das.*
407. Dwarka Nath Dutta.*
408. Rajendra Kumar Bhattacharyya.*
409. Kunja Behari De.*
414. Barada Charan De Chaudhuri.*
416. Ras Gobinda Deb.*
419. Rohini Kumar Dutta.
421. Man Mohan Majumdar.
424. Mohim Chandra Das.
429. Sarada Kanta Das.
430. Jagadis Chandra Ghose.
431. Umes Chandra Guha.
434. Mahendra Chandra Chaudhuri.
435. A. Z. Wadiat-ul Bari.
437. Mohendra Chandra Ray Chaudhuri.
438. Ramdhani Sing.
439. Arikshan Sing.
440. Baranasi Lal.
441. Debaki Nandan Misra.
442. Jang Bahadur.
443. Moorli Manohar Pershad.
444. Singheswar Pershad.
447. Lakshmi Narayan.
449. Ram Charitra Prosad Tiwari.
450. Bipin Bihari Chatterji.
451. Brij Nandan Prosad.
454. Yadubansi Sahay.
455. Mukti Nath Misra.
458. Dhaneswary Prosad Singh.
461. Krishna Dhon Chanda.
463. Surendra Nath Batabyal.
464. Kisori Mohan De.
465. John Baptist.
467. Charu Chandra Basu.
468. Rohini Kumar Goswami.
470. Surendra Nath Mukherji.
471. Aswini Kumar Biswas.
473. Abdur Rashid.
477. Ram Lal Mukherji.
478. Nanda Lal Banerji.
479. Kunjo Kisor De.
482. Nani Gopal Chatterji.
483. Raghu Nath Datta.
484. Atiqur Rahman Khan.
487. Satis Chandra Chakrabarti.
488. Satis Chandra Banerji.
489. Kali Bhushan Mukherji.
490. Digambar Banerji.

NOTE.—Candidates marked * are allowed to practise only in districts under the Chief Commissioner of Assam.

WILLIAM GRAHAM,
Secretary to the Pleadership and Mukhtarship Examination Board.

NOTIFICATION.

THE quarterly oral examination in the knowledge of English idiom and pronunciation notified in the Director of Public Instruction's Circular No. 162, dated the 9th December 1902, will be held at the office of the Inspector of Schools, Dacca Division, on the 23rd December. Candidates should send in their names so as to reach this office on or before the 19th instant. The examination is free, and is restricted to teachers.

Candidates will not be admitted to the examination unless they produce their University certificates.

The 10th June 1905.
DACCA,

H. A. BAMFORD,
Inspector of School, Dacca Division.

NOTICE No. I.

OFFICE OF THE INSPECTOR OF SCHOOLS, CHOTA NAGPUR DIVISION.

Purulia, the 10th June 1905.

THE half-yearly Examination of teachers who teach through the medium of English, in the art of teaching, will be held in the Purulia Zilla School on the 7th August 1905. The candidates who appear at this examination must have passed the Entrance or some other higher examination. They are requested to bring their certificates with them for admission to the said examination.

2. The examination will be mainly practical and will consist of—

(*a*) Practical examination in class control.

(*b*) A practical test of teaching ability.

(*c*) An oral examination, in which the Inspector of Schools or any other examiner will put some questions on the art of teaching, object lessons, class management, organization and discipline.

Salmon's "Teacher's Handbook of Slojd" (George Phillip and Son).

3. The book noted in the margin is prescribed for the said examination.

BALDEV MISRA,

Assistant Inspector of Schools,

Chota Nagpur Division, in charge.

NOTICE No. II.

THE half-yearly examination of teachers of Vernacular subjects, who have at least passed the Middle Vernacular Standard Examination, will be held in the first grade Training School at Ranchi on the 30th August 1905. The candidates are requested to bring their certificates with them for admission to the said examination.

2. The examination will be mainly practical, and will consist of—

(*a*) Practical examination in class control.

(*b*) A practical test of teaching ability.

(*c*) An oral examination in which the Inspector of Schools or any other examiner will put some questions on the art of teaching, object lessons, class management, organisation and discipline.

BALDEV MISRA,

Assistant Inspector of Schools, in charge.

NOTICE.

COMMERCIAL CLASSES IN THE PRESIDENCY COLLEGE.

DAY classes in the following subjects will be opened in the College on the 27th June 1905:—

1. English (modern), especially English correspondence, including Commercial correspondence, letter-drafting and précis-writing.
2. Arithmetic, including Commercial and Mental Arithmetic.
3. Book-keeping, Short-hand and Type-writing.
4. Commercial History and Geography.
5. Bengali, especially Commercial correspondence, letter-writing, précis-writing and translation.

All will be admitted to the Day classes who have passed the School Final or the Entrance Examination or who are able to satisfy the Education Department by passing a simple preliminary test examination.

There is no age limit.

The fee for the Day classes is Rs. 3 a month.

P. K. RAY,

Offg. Principal, Presidency College.

PRESIDENCY COLLEGE, CALCUTTA, *the 8th March 1905.*

NOTICE.

EVENING classes in the following subjects will be opened in the College on the 27th June next:—

1. Banking and Currency.
2. Commercial and Industrial Law.
3. Book-keeping.
4. Short-hand.
5. Type-writing.

Candidates who have attended the lectures in the day course will be eligible for admission to the Evening course, but others will be admitted if they satisfy the Education Department by passing a simple preliminary test examination.

There is no age limit.

The fee is Rs. 3 for each series of fifteen lectures in the evening course on—

1. Banking and Currency; and
2. Commercial and Industrial Law;

and Rs. 10 for each course of lectures on—

1. Book-keeping.
2. Short-hand; and
3. Type-writing.

P. K. RAY,
Offg. Principal, Presy. College.

PRESY. COLLEGE, CALCUTTA, *the 15th May 1905.*

NOTIFICATIONS OF THE BOARD OF REVENUE.

No. 3593½B.

NOTICE is hereby given that the Seventh Sale of Opium, the Provision of 1902-1903, will be held at the Government Opium Sale-room, No. 2 Bankshall Street, on Tuesday the 4th July 1905, at 11 A.M., and will comprise 4,000 chests, viz.—

		Chests.
Opium manufactured at the Patna Factory, consisting of	...	2,000
Ditto at the Ghazipur Factory, consisting of	...	2,000
Total	...	4,000

2nd.—The general conditions of the sale now advertised will be the same as usual. They may be ascertained by reference to the notification issued on the 22nd November 1904 and published in the *Government* and *Exchange Gazettes*, or on personal application at the office of the Board of Revenue.

3rd.—The latest dates for deposit and clearance will be the 10th and 19th July 1905, respectively, that is to say, no Bank of Bengal Receipts, Government Promissory Notes or other Public Securities that may be tendered for deposit in redemption of Promissory Notes given by purchasers in the sale-room will be received after 3-30 P.M. of Monday, the 10th July 1905, and no Bank of Bengal Receipts in full payment of lots will be accepted after 3-30 P.M. of Wednesday, the 19th July 1905.

4th.—In addition to the quantity above advertised for sale, the following quantities, more or less, of the opium manufactured at the Patna and Ghazipur Factories will be brought to sale between the sale now advertised and December next on or about the dates specified below. The Board of Revenue, however, reserve to themselves the right of altering these dates, should circumstances render it expedient to do so:—

DATES.	Manufactured at the Patna Factory; about chests.	Manufactured at the Ghazipur Factory; about chests.	Total; about chests.
On or about Tuesday, 1st August 1905 ...	2,000	2,000	4,000
On or about Tuesday, 5th September „ ...	2,000	2,000	4,000
On or about Tuesday, 26th September „ ...	2,000	2,000	4,000
On or about Wednesday, 1st November „ ...	2,000	2,000	4,000
On or about Tuesday, 5th December „ ...	2,000	2,000	4,000
Total ...	10,000	10,000	20,000

By order of the Board of Revenue, L. P.,

H. F. SAMMAN, *Offg. Secretary.*

BOARD OF REVENUE, L. P., CALCUTTA, *the 27th May 1905.*

Statement showing the quantity of salt (private property) in bonded warehouses and afloat on the river Hooghly on the 31st day of May 1905, and transactions during the half month from the 16th to the 31st May 1905.

Description of Salt.	In Bonded Warehouses in Calcutta.				Quantity afloat.	Grand Total.	Transactions during half month from the 16th to the 31st May 1905, inclusive.			
	In private golas.	In Sulkea Government golas.	In Kidderpore Dock Government golas.	Total.			Quantity on which duty has been paid.	Manifested quantity arrived in the port of Calcutta.	Deliveries from shipboard for consumption and for inland bonded warehouses.	Deliveries from bonded warehouses for consumption and for inland bonded warehouses.
		Mds.	Mds.	Mds.	Mds.	Mds.	Mds.	Mds.	Mds.	Mds.
United Kingdom—										
Liverpool and other Pangs salt.	.....	2,13,653	3,62,040	5,75,693	1,62,101	7,37,794	2,21,936	3,26,239	1,60,920	1,70,457
Other European countries—										
Hamburg Bremen salt...	.....	2,98,287	77,090	3,75,777	16,464	3,92,241	45,585	80,319	14,850	40,080
Ditto rock salt ..	.....	2,530	.....	2,530	.....	2,536	.... .	... .	.....	400
Spanish salt	.....	74,878	1,100	75,978	.....	75,978	16,050	.....	.....	21,800
Aden and Red Sea—										
Aden salt	.....	69,678	7,360	77,038	1,40,651	2,17,089	1,23,174	2,83,111	42,100	32,774
Salif salt	.....	2,03,877	.....	2,03,877	1,59,704	3,63,771	71,254	1,61,190	25,000	73,344
Do. rock salt	.....	18,800	.....	18,800	7,623	26,512	1,000	7,623	.....	500
Rawayah salt	.....	2,82,105	.....	2,82,105	.....	2,82,105	2,600	.....	.....	1,800
Muscat and Persian Gulf—										
Muscat, Lingah and Hanjam salt.	.....	55,044	.....	55,044	.....	55,044	.....	.....	.....	.....
Ditto ditto rock salt	.....	2,444	.....	2,444	.....	2,444	.....	.....	.....	.....
British India—										
Bombay salt	.....	97,702	15,910	1,13,672	32,324	1,45,996	53,128	1,25,133*	1,400	34,360
Madras salt	.....	.....	.....	.....	.....	.....	.....	.....	.....	.....
Cocanada salt	.....	.....	... ..	.....*	.....	... ..	.....	.....	.....	.....
Vizagapatam salt ...	.....	.....	.....	.....	.....	.....	.....	... .	.....	.....
Other places—										
Madagascar salt	.....	.....	.....	..	.....	.....	.....	.....	.....	.....
Total ...	.....	13,19,248	4,63,500	17,82,748	5,18,866	23,01,604	5,34,327	9,83,615	2,39,270	3,75,415

	Quantity in transit. Mds.
Liverpool and other Pengah salt	9,200
Hamburg	7,680
Aden	14,540
Bombay	8,700

Written off during the half month—	Mds.
Wastage in private golas	Nil
Ditto in Sulkea golas	3,251
Ditto in Kidderpore Dock golas ...	2,881
Abandoned and destroyed	133

* This quantity includes 51,903 maunds Bombay karkach salt on which duty was paid at Bombay.

By order of the Board of Revenue, L. P.,

B. FOLEY,

Offg. Collector of Customs.

CALCUTTA CUSTOM HOUSE, *the 13th June 1905.*

ELECTION OF MUNICIPAL COMMISSIONERS.

NOTIFICATION.

IT is hereby notified for general information that in the bye-election held on the 13th May 1905 in Ward V of the Howrah Municipality, Babu Noni Gopal Banerjee was duly elected as a Commissioner in the place of Babu Umesh Chandra Banerjee, deceased.

N. L. BAGCHI, *Persl. Asst., for Commr. on tour.*

COMMR.'S OFFICE, BURDWAN DIVN., CHINSURA, *the 6th June 1905.*

NOTIFICATION.

IT is hereby notified for general information that in the bye-election held on the 25th May 1905 in Ward III of the Khasar Municipality, Babus Naran Chandra Roy and Aushi Dhari Maity were duly elected as Commissioners in the places of Babus Sricharan Roy, deceased, and Ramlal Roy, removed under section 20 (c) of the Bengal Municipal Act.

N. L. BAGCHI, *Persl. Asst., for Commr. on tour.*

COMMR.'S OFFICE, BURDWAN DIVN., CHINSURA, *the 6th June 1905.*

NOTIFICATION.

IT is hereby notified for general information that under Rule 21 (*b*) of the Manual of Rules for the management of Charitable Hospitals and Dispensaries in Bengal, the following gentlemen are appointed to be members of the Committee for the management of the Charitable Dispensary at Bhubaneswar, in the district of Puri :—

1. Babu Bhagirathi Baru Mahapatra, *vice* Babu Narayan Satputhy, resigned.
2. „ Lokanath Panda, *vice* Babu Gobind Chandra Bharati, resigned.

E. F. GROWSE, *Commissioner.*

COMMR.'S OFFICE, CAMP PURI, *the 31st May 1905.*

NOTIFICATION.

IT is hereby notified for general information that Babu Durga Prashad, Deputy Magistrate, is appointed as a member of the Managing Committee of the Bunwari Lal Hospital in the district of Darbhanga, in place of Babu Ambica Prasad, Sen, transferred.

C. R. MARRIOTT, *Addl. Commissioner.*

PATNA COMMR.'S OFFICE, BANKIPUR, *the 7th June 1905.*

NOTIFICATION.

IT is hereby notified for general information that under Rule 21 (*c*) of the Dispensary manual the following gentlemen have been appointed members of the Committee for the Management of the Charitable Dispensary at Doulatpur, in the district of Khulna :—

1. The Magistrate of Khulna—*Ex-officio* President.
2. The Civil Surgeon of Khulna—*Ex-officio* Secretary.
3. Babu Saroda Kanto Das—Joint-Secretary.
4. Rai Shaheb Bankim Chandra Mazumdar.
5. Babu Jatindra Nath Basu.
6. „ Bepin Behari Sen, B.L.
7. „ Mohananda Mazumdar, B.L.
8. „ Nepal Chandra Chatterjee.
9. „ Priya Nath Basu.
10. „ Asutosh Banerjee.
11. „ Bharat Chandra Roy.
12. „ Nritya Gopal Mukherjee.
13. „ Priya Nath Das.

F. W. DUKE, *Offg. Commissioner.*

COMMR.'S OFFICE, PRESY. DIVN., CALCUTTA, *the 8th June 1905.*

NOTIFICATION.

IT is hereby notified for general information that, under rule 21 (*b*) of the Manual of Rules for the management of Charitable Hospitals and Dispensaries in Bengal, the following gentlemen are appointed to be members of the Committee for the management of the Charitable Dispensary at Faridpur, in the district of Faridpur :—

Names of Members.

1. The District Magistrate.
2. „ Civil Surgeon of the district.
3. Chairman, Municipality
4. Vice-Chairman, Municipality.
5. Babu Ananda Chandra Chatterjee.
6. „ Rajkumar Choudhury.
7. Babu Ashutosh Moitra.
8. „ Jeytish Chandra Chakraverty.
9. Hon'ble Babu Ambika Charan Mazumdar.
10. Babu Umesh Chandra Sen.
11. „ Kamini Kumar Sen.
12. Maulvi Abdur Rahman.

T. INGLIS, *Commissioner.*

COMMR.'S OFFICE; DACCA, *the 9th June 1905.*

The Calcutta Gazette.

WEDNESDAY, JUNE 14, 1905.

PART IA.

Orders and Notifications by the Government of India, &c.

[*Reprinted from the "Gazette of India."*]

The following orders, issued by the Government of India in the Home Department, are republished for general information.

R. W. CARLYLE,
Offg. Chief Secy. to the Govt. of Bengal.

NOTIFICATIONS.

MEDICAL.

Simla, the 9th June 1905.

No. 633.—Captain D. McCay, M.B., I.M.S., is appointed to be Professor of Physiology in the Medical College, Calcutta.

No. 635.—Lieutenant-Colonel J. Lewtas, M D, I M.S. (Bengal), Professor of Ophthalmic Surgery in the Medical College, Calcutta, and Ophthalmic Surgeon, College Hospital, is granted privilege leave for one month and twenty-seven days with special leave out of India, on urgent private affairs, for four months and three days in continuation, with effect from the 23rd June 1905.

No. 636.—Major F. P. Maynard, M.B., F.R.C.S., I M S. (Bengal), Civil Surgeon, Darjeeling, is appointed to officiate as Professor of Ophthalmic Surgery in the Medical College, Calcutta, and Ophthalmic Surgeon, College Hospital, during the absence on leave of Lieutenant-Colonel J. Lewtas, M D, I.M.S. (Bengal), or until further orders.

No. 639.—The services of Captain N. S Wells, M B, I M S, are placed temporarily at the disposal of the Hon'ble the Chief Commissioner of Assam.

No. 642.—The services of the undermentioned officers are placed permanently at the disposal of the Government of Bengal:—

Captain S. Anderson, M.B., I.M.S.
Captain J. W. F. Rait, M.B., I.M.S.
Captain H. Innes, M B., I.M S.
Captain J. C. H. Leicester, M.D., F.R.C S., I.M S.

JUDICIAL.

The 9th June 1905.

No. 865.—The Hon'ble Mr. Justice Pargiter, a Judge of the High Court of Judicature at Fort William in Bengal, is granted privilege leave for one month, with effect from the 1st August 1905.

H. A. STUART,
Offg. Secy. to the Govt. of India.

The following order, issued by the Government of India in the Foreign Department, is republished for general information.

R. W. CARLYLE,
Offg Chief Secy. to the Govt. of Bengal.

NOTIFICATION.

Simla, the 9th June 1905.

No. 1239G.B.—With reference to Foreign Department Notification No. 860G.B. dated the 28th April 1905, Mr. Isaac Shrager, Vice-Consul for Spain at Calcutta, resumed charge of his office on the 31st May 1905.

S. M. FRASER,
Offg. Secy. to the Govt. of India.

The following order issued by the Government of India in the Military Department, is republished for general information.

R. W. CARLYLE,
Offg. Chief Secy. to the Govt. of Bengal.

Simla, the 9th June 1905.

VOLUNTEER CORPS.

APPOINTMENTS, PROMOTIONS AND RESIGNATIONS.

Northern Bengal Mounted Rifles.

No. 505.—Lieutenant Robert Gollan to be Captain, *vice* Oliver, promoted; with effect from the 25th May 1905.

Second-Lieutenant Hugh Gordon Cotton to be Lieutenant, *vice* Gollan, promoted; with effect from the 25th May 1905.

H. B. B. WATKIS, *Colonel*,
Offg. Secy. to the Govt. of India.

The Calcutta Gazette.

WEDNESDAY, JUNE 14, 1905.

PART IB.

ORDERS BY THE LIEUT.-GOVERNOR OF BENGAL.

MUNICIPAL AND LOCAL.

NOTIFICATIONS.

No. 961T.M.—The 7th June 1905.—Whereas a Notification No. 1477M., dated the 20th March 1905, was published at page 55, Part IB of the *Calcutta Gazette* of the 22nd March 1905, declaring the intention of the Lieutenant-Governor to sanction the imposition by the Commissioners of the Bhadreswar Municipality, in the district of Hooghly, of a rate on the annual value of holdings within the Gourhaty ward of that Municipality in lieu of the tax on persons occupying holdings within the Municipality, and whereas no objection has been raised to the proposal within one month from the date of the publication of the above notification within the Municipality, it is hereby notified for general information that in the exercise of the power vested in the Local Government by section 85 of the Act, and in accordance with the recommendation of the Commissioners of the Bhadreswar Municipality, made at a meeting, the Lieutenant-Governor sanctions the imposition of the said rate within the said portion of the above Municipality in lieu of the tax upon persons occupying holdings within the Municipality at present in force in that Municipality.

Hooghly.

No. 963T.M.—The 6th June 1905.—It is hereby notified that, under section 27 of the Bengal Municipal Act, III of 1884, the Lieutenant-Governor is pleased to appoint the Revd. R. Kilgour to be a Commissioner of the Darjeeling Municipality, *vice* the Revd. H. C. Duncan, resigned.

Darjeeling.

No. 990T.M.—The 7th June 1905.—It is hereby notified that, under section 15 of the Bengal Local Self-Government Act, III of 1885, the Lieutenant-Governor is pleased to appoint the following gentlemen to be members of the several Local Boards in the district of Noakhali:—

Noakhali.

Local Board.	Names of members.
Sadar ..	Babu Tarak Chandra Guha.
	„ Bidhu Bhushan Bukshi.
	„ Jagat Bondhu Dutta.
	Munshi Abdul Hamid.
	Kazi Obedullah.
	Babu Karuna Chandra Das.
	Maulvi Muzaffar Ahmed.
	„ Majib Ali Chaudhury.
	Babu Chandra Kumar Bose Chaudhury.
	„ Krishna Kumar Rai Chaudhuri.
	„ Lakshmi Chandra Mozumdar.

Local Board.	Names of members.
Feni ...	The Subdivisional Officer, Feni (*ex officio*). Maulvi Abdul Majid. „ Abdul Majid. Babu Purna Chandra Chakravarty. „ Madan Mohon Mukherjee. Munshi Abdul Hamid. Babu Mohesh Chandra Chakravarty. „ Guru Das Kar. „ Akshoy Kumar Chakravarty.

No. 1030T.M.—The 10th June 1905.—It is hereby notified that, under section 27 of the Bengal Municipal Act, III of 1884, the Lieutenant-Governor is pleased to appoint Mr. T. O. A Kelly to be a Commissioner of the Burdwan Municipality, in the district of Burdwan, *vice* Mr. W. H T. Saukey, resigned.

Burdwan.

No. 1045T.M.—The 10th June 1905.—It is hereby notified that, under section 27 of the Bengal Municipal Act, III of 1884, the Lieutenant-Governor is pleased to appoint Babu Surendra Nath Bhattacharjya to be a Commissioner of the Gobardanga Municipality, in the district of the 24-Parganas, *vice* Babu Sanjib Chandra Banerjee, resigned.

24-Parganas.

No. 1048T.M.—The 10th June 1905.—It is hereby notified that, under section 19 of the Bengal Local Self-Government Act, III of 1885, Mr. C. T. William has been elected by the members of the Buxar Local Board, in the district of Shahabad, to be a member of the Shahabad District Board, *vice* Mr. F. M. Luce, resigned.

Shahabad.

No. 1050T.M.—The 10th June 1905.—It is hereby notified that, under section 19 of the Bengal Local Self-Government Act, III of 1885, the Lieutenant-Governor is pleased to appoint Babu Gopi Krishun Prosad Singh to be a member of the Arrah Local Board, in the district of Shahabad, *vice* Babu Durga Prasad, deceased.

Shahabad.

No. 1052T.M.—The 10th June 1905.—It is hereby notified that, under section 19 of the Bengal Local Self-Government Act, III of 1885, the Lieutenant-Governor is pleased to appoint Babu Jung Bahadur Lal to be a member of the Arrah Local Board, in the district of Shahabad, *vice* Maulvi Mohamed Heyat, deceased.

Shahabad.

No. 1058T.M.—The 12th June 1905.—It is hereby notified that, under section 19 of the Bengal Local Self-Government Act, III of 1885, Babu Tajendra Narain Singh has been elected by the members of the Supaul Local Board, in the district of Bhagalpur, to be a member of the Bhagalpur District Board, *vice* Haji Wahid Ali.

Bhagalpur.

No. 1060T.M.—The 12th June 1905.—It is hereby notified that, under section 27 of the Bengal Municipal Act, III of 1884, the Lieutenant-Governor is pleased to appoint Mr. J. Cornes, I.C.S., to be a Commissioner of the Balasore Municipality, in the district of Balasore, *vice* Mr. W. Egerton, I.C.S., resigned.

Balasore.

No. 1062T.M.—The 12th June 1905.—It is hereby notified that, under section 59 of the Bengal Municipal Act, III of 1884, the Lieutenant-Governor approves the election by the Commissioners of the Bihar Municipality in the district of Patna, of Mr. J. S. Davidson to be their Chairman, *vice* Mr. J. T. Baboneau, resigned.

Patna.

E. A. GAIT,
Offg. Secy. to the Govt. of Bengal.

ERRATUM.

No. 1004T.M. dated the 8th June 1905.—In Government Notification No. 534T.-M., dated the 12th May 1905, published in Part IB of the *Calcutta Gazette*, dated the 17th May 1905, appointing certain gentlemen to be members of the District Board of Chittagong *for* "Mr. T. G. Barnett" *read* "Mr. T. G. Barnell" and *for* "Munshi Fazal Kabir Khan" and "Munshi Anwar Ali Khan" *read* "Maulvi Fazal Kabir Khan" and "Maulvi Anwar Ali Khan."

Chittagong.

E. A GAIT,
Offg. Secy. to the Govt. of Bengal.

The Calcutta Gazette.

WEDNESDAY, JUNE 14, 1905.

PART II.

Advertisements.

[N. B.—Advertisements, Notices, &c., intended for insertion in this part of the Gazette cannot be received after Noon on Monday.]

LAND SALE NOTICES.

Notification A.

NOTICE is hereby given under sections 6 and 13, Act XI of 1859, that the undermentioned estates and shares of estates in the district of Noakhali will be put up for sale at the office of the Collector of that district on the 14th June 1905 at 1 P M. for arrears of revenue and other demands, which by law are realisable as arrears of land revenue.

When in columns 5, 7 and 9 of the appended statement it is stated that only a share is to be sold, it is to be understood that a separate account is kept for that share.

Tauzi No.	Name of mahal and pargana.	Sadar jama of the whole estate.	Whether the whole estate is to be sold.	If only a share is to be sold, specification of such share or shares.	Names of proprietors of property to be sold.	If only a share is to be sold, the sadar jama of such share.	If the whole estate is to be sold, the arrears due from it.	If only a share is to be sold, the arrears due from it.
1	2	3	4	5	6	7	8	9
* 1	* Elahabad, pargana Elahabad.	...	Share ...	Residuary share 9 annas ..		Rs. A. P. 851 8 4		Rs. A. P. Land Revenue- 309 11 5 Road Cess - 429 8 8 739 3 1

B. C SEN, Collector.

Noakhali, the 3rd May 1905.

Notification A.

NOTICE is hereby given, under sections 6 and 13, Act XI of 1859, that the undermentioned estates and shares of estates in the district of Tippera will be put up for sale at the office of the Collector of that district on the 27th June 1905 at 12 o'clock for arrears of revenue and other demands which by law are realisable as arrears of land revenue.

When in columns 5, 7 and 9 of the appended statement it is stated that only a share is to be sold, it is to be understood that a separate account is kept for that share.

Tauzi No.	Name of mahal and pargana.	Sadar jama of whole estate.	Whether the whole estate is to be sold.	If only a share is to be sold, specification of such share or shares.	Names of proprietors of property to be sold.	If only a share is to be sold, the sadar jama of such share.	If the whole estate is to be sold, the arrears due from it.	If only a share is to be sold, the arrears due from it.
1	2	3	4	5	6	7	8	9
		Rs. A. P.					Rs. A. P.	
1933/3	Pargana Bardakhat Balukandi Joar.	2,535 13 3	Whole ...	.....	Dwarka Nath Barman and others.	.....	638 15 3	.....
1933/50	Pargana Bardakhat Joar Shingula.	1,380 3 1	Do. ...	.....	Purna Chandra Chakraberty and others.	.....	373 11 1	.....
1933/51	Parrana Bardakhat Tinchitta Joar.	940 3 9	Do. ...	.....	Tarini Charan Bordhon and others.	.....	193 14 3	.....

Comilla, the 15th May 1905. H. W. SCROOPE, Collector.

Notification A.

NOTICE is hereby given, under sections 6 and 13, Act XI of 1859, that the undermentioned estates and shares of estates in the district of Mymensingh will be put up for sale at the office of the Collector of that district on the 23rd June 1905 at 12 o'clock noon for arrears of revenue and other demands, which by law are realisable as arrears of land revenue.

When in columns 5, 7 and 9 of the appended statement it is stated that only a share is to be sold, it is to be understood that a separate account is kept for that share.

Tauzi No.	Name of mahal and pargana.	Sadar jama of whole estate.	Whether the whole estate is to be sold.	If only a share is to be sold, specification of such share or shares.	Names of proprietors of property to be sold.	If only a share is to be sold, the sadar jama of such share.	If the whole estate is to be sold, the arrears due from it.	If only a share is to be sold, the arrears due from it.
1	2	3	4	5	6	7	8	9
		Rs.		*Second-class estates.*			Rs. A. P.	
6178	Joysarbatal, pargana Bardakhat.	586	Whole ...	.....	Kali Sundari Dassya and others.	.....	9 9 3	.....
6560	Char Isherdia, pargana Mymensingh.	523	Do. ...	.....	Brojendra Kishore Roy Chaudhury and others.	.....	64 14 9	.....

Mymensingh Collectorate, the 13th May 1905. W. B. THOMSON, Collector.

Notification A.

NOTICE is hereby given, under sections 6 and 13, Act XI of 1859, that the undermentioned estates and shares of estates in the district of Burdwan will be put up for sale at the office of the Collector of that district on the 21st June 1905 at 12 o'clock noon for arrears of revenue for March 1905 kist and other demands, which by law are realizable as arrears of land levenue.

When in columns 5, 7 and 9 of the appended statement it is stated that only a share is to be sold, it is to be understood that a separate account is kept for that share.

Tauzi No.	Name of mahal and pargana.	Sadar jama of whole estate.	Whether the whole estate is to be sold.	If only a share is to be sold, specification of such share or shares.	Names of proprietors of property to be sold.	If only a share is to be sold, the sadar jama of such share.	If the whole estate is to be sold, the arrears due from it.	If only a share is to be sold, the arrears due from it.
1	2	3	4	5	6	7	8	9
		Rs. A. P.					Rs. A. P.	
17	Chak Durga, pargana Bardhati.	9,989 2 11	Whole estate is to be sold.	.....	Seyadani Aymana Bibi ...	.....	3,134 0 1	.....

Burdwan Collectorate, the 16th May 1905. P. H. O'BRIEN, Collector.

Notification A.

NOTICE is hereby given, under sections 6 and 13, Act XI of 1859, that the undermentioned estates and shares of estates in the district of Nadia will be put up for sale at the office of the Collector of that district on the 23rd June at 12 noon, for arrears of revenue and other demands, which by law are realisable as arrears of land revenue.

When in columns 5, 7 and 9 of the appended statement it is stated that only a share is to be sold, it is to be understood that a separate account is kept for that share, and that the other share or shares in the estate are excluded from the sale.

Tauzi No.	Name of mahal and pargana.	Sadar jama of whole estate.	Whether the whole estate is to be sold.	If only a share is to be sold, specification of such share or shares.	Names of proprietors of property to be sold.	If only a share is to be sold, the sadar jama of such share.	If the whole estate is to be sold, the arrears due from it.	If only a share is to be sold, the arrears due from it.
1	2	3	4	5	6	7	8	9
		Rs. A. P.				Rs. A. P.	Rs. A. P.	Rs. A. P.
266	Jagadanandpur, pargana Bagowan.	955 14 11	Whole ...	.....	Jotindra Nath Ray ...	.....	2 10 2	.....
61	Balia, pargana Plassy ...	5,631 0 9	.....	1a. 13c. 1c. 3d. (separate account No. 61-1).	Dub Mohini Dasi and others.	586 9 1	.....	49 10 8
61	Ditto, ditto ..	5,631 0 9	.....	16c. 2c. 6d. (separate account No. 61-4).	Ditto ditto ...	293 4 7	.....	3 7 5
			Total ...	2a. 10g.				
				The other shares, viz., 13a. 10c., will be excluded from the sale.				
213	Gopalpur, pargana Shahanjlal.	2,176 0 5	.....	11a. 15g. 2c. 2kg. (separate account No. 213-0).	Panchanan Mazumdar, self and guardian on behalf of Lalit Mohan Mazumdar.	1,601 4 8	..	1 10 2
				The other share, viz., 4a. 4g 1c. 2kg., will be excluded from the sale.				
3227	Pakuria, pargana Taragonia.	777 6 0	.....	5a. 13g. 8c. 1d. (residue) ...	Bama Charan Choudhury.	726 6 4	....	3 6 2
				The other shares, viz., 10a. 6g. 2kg. 2d., will be excluded from the sale.				
940	Chur Kaipal, pargana Shahanjlal.	1,390 6 0	Whole ...	.....	Monmohan Ray, self and guardian for Kedar Nath Ray.	.....	1 5	.....

Nadia Collectorate, the 20th May 1905. R. S. GREENSHIELDS, Collector.

Notification B.

NOTICE is hereby given, under sections 5 and 13, Act XI of 1859, that unless the arrears mentioned below are paid on or before the next latest date of payment, viz., the 28th April 1905, the undermentioned estates or shares of estates in the district of Puri will be put up for sale at the office of the Collector of that district on the 10th July 1905 at 12 o'clock noon for the said arrears.

When in columns 5, 7 and 9 of the appended statement it is stated that only a share is to be sold, it is to be understood that a separate account is kept for that share, and that the other share or shares in the estate not specifically mentioned in column 5 are excluded from the sale.

Tauzi No.	Name of mahal and pargana.	Sadar jama of whole estate.	Whether the whole estate is to be sold.	If only a share is to be sold, specification of such share or shares.	Names of proprietors of property to be sold.	If only a share is to be sold, the sadar jama of such share.	If the whole estate is to be sold, the arrears due from it.	If only a share is to be sold, the arrears due from it.	Nature and amount of demand for which to be sold.
1	2	3	4	5	6	7	8	9	10
		Rs. A. P.		A. P.		Rs. A. P.	Rs. A. P.	Rs. A. P.	
185 2	Killah Rupsa, pargana Athais	1,689 0 0	.....	Kismat ... 9 4	Trilochan Chaudhuri and others.	985 5 0	.....	491 11 0	Due for last April 1905.
186 1	Ta. Gangawarpur, pargana Sanchas.	1,619 0 0	.....	,, ... 9 0	Baladev Prakas Bramhachari.	910 11 0	.....	455 0 0	Ditto.
186 2	Ditto ...	1,619 0 0	.....	,, ... 7 0	Chandra Moni Debya, mother and guardian of Han man Khentia.	708 5 0	.....	354 0 0	Ditto.
66	Ma. Durgadaspur, pargana Kotrahang.	579 0 0	Whole ...	.....	Raja Makund Dev ...	. .	459 0 0	.....	Ditto.
79 6	Ma. Thanthana, pargana Kotrahang.	653 0 0	.....	Kismat .. 13 0	Dinanandhu Pain, brother and guardian of Gopi Nath Pain and others.	530 9 0	.....	265 14 0	Ditto.
347 1	Ta. Amuri, pargana Purbadual.	1,216 0 0	.....	,, ... 8 0	Nayanmali Jenadie, mother and guardian of Durga Charan Jagadeb Rai.	608 0 0	.....	304 0 0	Ditto.
347 2	Ditto ...	1,216 0 0	.....	,, ... 8 0	Radha Mohan Rai ...	608 0 0	.....	304 0 0	Ditto.

Puri Collectorate, the 7th April 1905. J. M. BLACKWOOD, Collector.

Notification A.

NOTICE is hereby given, under sections 6 and 13, Act XI of 1859, that the undermentioned estates and shares of estates in the district of Backergunge will be put up for sale at the office of the Collector of that district on the 23rd June 1905 corresponding to 9th Ashar 1312 B.S., at 12 noon for arrears of revenue and other demands, which by law are realisable as arrears of land revenue.

When in columns 5, 7 and 9 of the appended statement it is stated that only a share is to be sold, it is to be understood that a separate account is kept for that share.

Tauzi No.	Name of mahal and pargana.	Sadar jama of whole estate.	Whether the whole estate is to be sold.	If only a share is to be sold, specification of such share or shares.	Names of proprietors of property to be sold.	If only a share is to be sold, the sadar jama of such share.	If the whole estate is to be sold, the arrears due from it.	If only a share is to be sold, the arrears due from it.
1	2	3	4	5	6	7	8	9
		Rs. A. P.				Rs. A. P.	Rs. A. P.	Rs. A. P.
1445	Joar Durgapur, pargana Bosergomedpur.	824 4 10½	...	Residuary share 10a. will be sold and share 6a. will be excluded from the sale.	Pyari Mohon Pal and others.	512 10 10½	.....	141 5 3½
1446	Mahal Darihat, Rajabarigunj, pargana ditto.	944 9 7	.....	Residuary share 14a. 15g. will be sold and share 1a. 5g. will be excluded from the sale.	Raja Sree Nath Roy Choudhury and others.	870 12 7	.....	57 1 0½
1479	Taluk Ganga Gobindo Nag and others, pargana ditto.	808 9 6½	Whole ...	.....	Chandra Bindde Pal Choudhury and others.	.....	215 7 8	.....
1533	Taluk Krishna Prosad Guha, pargana ditto.	3,960 15 8	Do.	.....	Brojo Lal Roy Chaudhury and others.	.....	108 4 10½	.....
1622	Joar Ramna Bamna, taluk Mohammad Safi, pargana ditto.	19,487 10 8	.....	Separate account No. 2 share— 6a. 1g. 2kr. 2kt. 1rd 3kr. 1kt. 8til will be sold, and share 9a. 18g. 1kr. 19til 3kr. 3kg. 18gd. 1kt. 19til will be excluded from the sale.	Mr. G. L. Garth and Mr. H. L. Weatherall, trustees to the estate of Golam Ahad Choudhury and others.	7,406 13 0	.....	36 14 6
1678	Taluk Said Miron, pargana ditto.	1,188 14 9½	Whole ...	...	Iochamoyee Gupta and others.	...	444 11 0½	.....
3845	Silimabad zamindari 13s., pargana Silimabad.	3,599 8 0½	.....	Residuary share 7a. 10g. will be sold, share 8a. 16g. 2½kr. will be sold separately and the rest 5a. 13g. 1½kr. will be excluded from the sale.	Kasiswari Choudhurani, executrix to the estate of her husband Durga Narayan Roy Choudhury.	1,667 4 2½	.....	742 2 6½
3846	Ditto ...	3,599 8 0½	...	Separate account No. 1 share— 2a. 16g. 2½kr. will be sold, share 7a. 10g. will be sold separately and share 5a. 13g. 1½kr. will be excluded from the sale.	Ditto ...	837 6 7	.....	281 3 9½
4538	Abad Debpur, pargana Ratnadi Kalikapur.	2,333 0 0	Whole ...	.....	Satis Chandra Chakravarti and others.	...	1,749 12 0	.....
4546	Padma *alias* Ramjanpur, pargana Kasimpur, Sehalapatti.	5,363 0 0	Do.	.....	Ambica Charan Chakravarty and others.	.....	2,691 0 0	.....
4767	Char Udaypur, pargana Chandradvip.	566 0 0	Do. ...	.....	Babu Chandi Charan Chatterjee, Manager, Court of Wards, to the estate of Sir Raja Sourindra Mohan Tagore, Kt., C.I.E., etc., and another.	... ...	566 0 0	.....
5196	Char Kakra, together with Rampur, pargana Jasira.	7,939 0 0	Do. ...	.....	Abdul Goni and others.	.....	1,986 15 0	.....
5266	Char Manpura, pargana Jasira.	1,616 2 0	Do. ...	.....	Apseroddin and others	.....	516 0 6	.....
6654	Surplus land of thak Koyaria, pargana Kasimpur Sehalapatti.	988 0 0	Do. ...	.....	Syed Mohammad Mosaffar Hoshen Choudhury and others.	.....	705 10 0	.....

Backergunge Collectorate, the 11th May 1905. H. C. STREATFEILD, Collector.

Notice.

NOTICE is hereby given, under sections 6 and 13 of Act XI of 1859, that the undermentioned estate and share of estate in the district of the 24 Parganas will be put up for sale at the office of the Collector of that district on the 17th July 1905, at 12 o'clock noon, for arrears of revenue and other demands which by law are realised as arrears of land revenue.

When in columns 5, 7 and 9 of the appended statement it is stated that only a share is to be sold, it is understood that separate account is kept for that share and that the share or shares are excluded from sale.

Consecutive number.	Tauzi No.	Name of pargana and mahal.	Sadar jama for the whole estate.	Whether the whole estate is to be sold.	If only a share is to be sold, the specification of such share.	Names of proprietors of properties to be sold.	If only a share is to be sold, the sadar jama of such share.	If the whole is to be sold, the arrears due from it.	If only a share is to be sold, the arrears due from it.
1	2	3	4	5	6		8	9	10
1	302/1	Azimabad, Kismat Hudajoy-Chandipore.	Rs. A. P. 9,513 7 8		Excluding 12as. share, remaining 4as. share.	Radhabinode Mandal and others.	Rs. A. P. 2,078 8 11	... ...	Rs. A. P. 711 1 2½

Alipore, the 8th May 1905. BHUPATI CHAKRAVARTTI, *for* Collector.

Notification A.

NOTICE is hereby given, under sections 6 and 13, Act XI of 1859, that the undermentioned estates and shares of estates in the district of Midnapore will be put up for sale at the office of the Collector of that district on the 27th June 1905 at 12 o'clock for arrears of revenue and other demands which by law are realizable as arrears of land revenue.

When in columns 5, 7 and 9 of the appended statement it is stated that only a share is to be sold, it is to be understood that a separate account is kept for that share.

Tauzi No.	Name of mahal and pargana.	Sadar jama of whole estate.	Whether the whole estate is to be sold.	If only a share is to be sold, specification of such share or shares.	Names of proprietors of property to be sold.	If only a share is to be sold, the sadar jama of such share.	If the whole estate is to be sold, the arrears due from it.	If only a share is to be sold, the arrears due from it.
1	2	3	4	5	6	7	8	9
		Rs. A. P.				Rs. A. P.	Rs. A. P.	Rs. A. P.
275	Pargana tappa Balisita, mahal Bnitorebinode, 4 annas' share.	1,658 14 9		Residuary share, excluding separate account No. I—10a. 13g. 1k. 1kt. share of the mahal. All other shares than that specified will be excluded from sale.	Chowdry Gopendra Nundan Das Mahapatra.	1,105 15 3	.....	518 3 0
312	Pargana Batitaki, mahal Palgeria.	630 1 7	Entire ...	.....	Mohendra Nath Pal, sabait of Lukshmi Janardan Jew.		290 7 0	.....
380	Pargana Bhuniamutta, mahal Haripore *alias* Banamalipore.	920 13 8	...	Residuary share, excluding separate account No. I—15a. 4g. share of the mahal. All other shares than that specified above will be excluded from sale.	Kripasindoo Masanta and others.	874 12 8	.....	372 0 0
585	Pargana Chetua, mahal Dubrajpore.	3,408 10 1	.....	Separate account No. I—8a. share of the mahal. All other shares than that specified above will be excluded from sale.	Sreemati Mangala Dasi and others.	1,704 4 11	.....	356 13 8
535	Ditto ...	3,408 10 1	.....	Separate account No. III—3a. share of the mahal. All other shares than that specified above will be excluded from sale.	Jotindra Nath Sing and others.	639 1 11	.....	219 11 10
568	Pargana Dukhinmal, mahal Haripore.	6,769 1 5	.....	Separate account No. II—8a. share of the mahal. All other shares than that specified will be excluded from sale.	Haripriya Debi	3,384 5 9	.....	1,480 8 3
730	Pargana Eqrachore, mahal Bhatda.	3,613 6 4	.....	Residuary share, excluding separate accounts Nos. 3, 4, and 10 to 24— As. G. K. KT. Mauza Baria *alias* Jharia ... 16 0 0 0 M. Gopinathpore ... 16 0 0 0 M. Karakpara ... 16 0 0 0 M. Miregapore ... 16 0 0 0 M. Naraharipore 16 0 0 0 M. Sundarpore 16 0 0 0 M. Malikpore ... 0 3½ 0 0 M. Mahanagore 0 3½ 0 0 M. Jagannathpore .. ... 5 6 2 2 As. G. KG. TIL. M. Kamasdiha... 3 9 9 15 K. M. Dabeta *alias* kist Dambeta 1 15 2 18 KG. M. Nobipore ... 9 11 6 14 M. Totulmari ... 12 0 0 0 M. Bhatda ... 8 11 6 3 1K. M. Gonipore ... 3 0 0 0 M. Narainbar 16 0 0 0 All other shares than that specified above will be excluded from sale.	Chowdry Gopendra Nundan Das Mahapatra.	1,311 8 0	....	203 8 0
880	Pargana Kalindibalsai, mahal Chaddahazari.	2,278 11 0	.....	Separate account No. III—8a. share of the mahal. All other shares than that specified above will be excluded from sale.	Haripriya Debi	1,139 5 6	.....	407 3 4
907	Pargana Kasijora, mahal Baxitola *alias* Deulbar.	1,530 4 0	.....	Residuary share, excluding separate account No. I—14a. 10g. share of the mahal. All other shares than that specified will be excluded from sale.	Syed Aftauddin Ahmed	1,386 12 7	.....	650 7 0, January and March 1905.
921	Pargana Kasijora, mahal Chakdaha *alias* Radabaliuvchak.	9,185 8 0, including police.	.....	Separate account No. 4—4a. 5g. share of the mahal. All other shares than that specified will be excluded from sale.	Ashutosh Chatterjee and others	2,439 14 3, including police.	.....	1,141 12 10, including police.
921	Ditto ...	9,185 8 0, including police.	.....	Separate account No. 6—1a. 15g. share of the mahal. All other shares than that specified will be excluded from sale.	Ditto ...	1,004 10 7, including police	.....	469 5 10, including police.

Tauzi No.	Name of mahal and pargana.	Sadar jama of whole estate.	Whether the whole estate is to be sold.	If only a share is to be sold, specification of such share or shares.	Names of proprietors of property to be sold.	If only a share is to be sold, the sadar jama of such share.	If the whole estate is to be sold, the arrears due from it.	If only a share is to be sold, the arrears due from it.
1	2	3	4	5	6	7	8	9
		Rs. A. P.				Rs. A. P.	Rs. A. P.	Rs. A. P.
937	Pargana Kasijora, mahal Gurparusattampore *alias* Chaitnyapore	738 10 8	..	Residuary share, excluding separate accounts Nos. 1 and 2—12a. 16g. share of the mahal. All other shares than that specified will be excluded from sale.	Ganganarain Maity and others.	590 14 8	.....	259 8 11, January and March 1905.
972	Pargana Kasijora, mahal Kadalia.	1,450 14 1	Entire ...	.....	Debendra Nundan Das Mahapatra.	.....	8 13 10	... .
1037	Pargana Kasijora Tist, mahal Manur	2,390 6 10	Do. ...	.....	Damudar Das Barman, sabait of Samaljow Tagore.	.....	1,046 13 6	.....
1660	Pargana Khandar, mahal Panchpara.	4,053 11 5		Separate account No. I— Mauza Abdulla— M. Aroon. M. Aroon chak M. Patch chak. M. Gokulpore. M. Jamunda. M. Kamal chak. M. Monohar chak. M. Pal Gokul. M. Rasik chak. M. Ranihati. M. Rai chak. M. Binode chak. M. Madhu Sudan chak. M. Pithai chak. Eight annas' share of all the above mauzas. All other shares than that specified will be excluded from sale.	Krishna Chandra Kar and others.	632 5 6	....	293 7 3
1731	Pargana Oynachore, mahal Ankapurba.	1,001 7 2	.....	Residuary share, excluding separate account No. I—8a. share of the mahal. All other shares than that specified will be excluded from sale.	Ganganarain Maity ..	800 11 7	... ..	235 13 6
1905	Pargana Narainguriat, mahal Khelar *alias* Bonpatua.	3,415 1 7	..	Residuary share, excluding separate accounts Nos. 1 to 4—	Chowdry Krishna Chandra Das Mahapatra and others.	2,441 1 2	.....	338 13 5, January and March 1905.

	A.	G.	K.	KT.
Mauza Allchak	5	6	2	2
M. Baksubeg	10	13	1	1
M. Balaram Chaita.	16	0	0	0
M. Banpatna ...	16	0	0	0
M. Bagberia ...	16	0	0	0
M. Baligeria ...	16	0	0	0
M. Benaparadihi	16	0	0	0
M. Bramhanibhera.	10	13	1	1
M. Kalikachuk ...	5	6	2	2
M. Kuchaibhaluk	16	0	0	0
M. Khalaridihi ...	16	0	0	0
M. Khatrageria chak.	10	13	1	1
M. Lahabaran-chak.	10	13	1	1
M. Madhuchak ...	5	6	2	2
M. Mandalageria	5	6	2	2
M. Madhabchak	5	6	2	2
M. Nischindipur	16	0	0	0
M. Lekrageria ...	5	6	2	2
M. Parijatnagar	16	0	0	0
M. Punjachotta	5	6	2	2
M. Purusatiam-chak.	16	0	0	0
M. Prempura ...	16	0	0	0
M. Raghunath-pore.	16	0	0	0
M. Raipore ...	16	0	0	0
M. Satrughanbar	5	6	2	2
M. Sawtalchak ...	5	6	2	2
M. Sekharpari ...	16	0	0	0
M. Tatra ...	10	13	1	1
M. Ucchabanuda-bar.	5	6	2	2
M. Bhagabanpore	16	0	0	0
M. Chaita ...	16	0	0	0
M. Deulbar ...	5	6	2	2
M. Harachak ...	5	6	2	2
M. Hirapares ..	10	13	1	1
M. Hirapares-chak.	10	13	1	1
M. Koitpore ...	5	6	2	2
M. Kaimkhan ...	10	13	1	1
M. Kaimkhan-chak.	10	13	1	1
M. Kalidasbhera	10	13	1	1

All other shares than that specified will be excluded from sale.

2547	Pargana Salong, mahal Mohar.	1,445 9 0	Entire ...	.....	Sarat Chandra Jana and others.	.....	679 8 0	... ..
2427	Pargana Shahapore, mahal Hasimpore.	1,014 2 10, including police.	Do. ...	.....	Sarat Chandra Singha-Chowdery.	.....	190 11 4 Land revenue.	.....
2577	Pargana Shipore, mahal Legun.	2,619 5 3	..	Separate account No. 23—	Srimati Tilotoma Debi, mother and guardian of Chow. Narendra Nath Pahari, minor.	1,376 15	.....	630 7 1

	A.	G.	K.
Mauza Akbar.	10	0	3
M. Aulda	7	0	3
M. Barastia	10	0	3
M. Bohalia	10	0	3
M. Khagda	10	0	3
M. Khurutia ...	10	0	3
M. Modekool ...	10	0	3

Touzi No.	Name of mahal and pargana.	Sadar jama of whole estate.	Whether the whole estate is to be sold.	If only a share is to be sold, specification of such share or shares.	Names of proprietors of property to be sold.	If only a share is to be sold, the sadar jama of such share.	If the whole estate is to be sold, the arrears due from it.	If only a share is to be sold, the arrears due from it.
1	2	3	4	5	6	7	8	9
		Rs. A. P.		A. G. K. KG. M. Madhab Chandra Chak ... 10 0 3 0 M. Logura ... 6 1 3 0 M. Panarul ... 3 10 0 6 M. Nagat Khanda 10 0 3 0 M. Shiporebar ... 10 0 3 0 M. Takapara ... 10 0 3 0 M. Gopalpore ... 6 1 3 0 M. Jagunia ... 10 0 3 0 M. Kanongobar... 3 10 0 6 M. Kanooprojapati kist ... 3 10 0 6 M. Kuarpore ... 10 0 3 0 M. Krishnapore... 10 0 3 0 M. Brindabanpore 7 0 3 0 M. Chaulda ... 6 1 3 0 M. Dubda ... 10 0 3 0 M. Dubdahati taki 10 0 3 0 M. Dhusurda ... 7 0 3 0 M. Gobrachak ... 10 0 3 0 M. Godaychak ... 7 0 3 0 All other shares than that specified will be excluded from sale.			Rs. A. P.	
				Part II.				
2717	Pargana Jalamutta, mahal Keoramal Erinch Bisuan, Baindabazar Jalpai.	3,360 14 2	Entire ...	.....	Sreemati Haripriya Debi	.....	1,876 5 6	.....
2676	Pargana Potaspore, mahal Dehatgokulpore.	28,040 0 0	Do. ...	.. .	Chowdry Gopendra Nundan Das Mahapatra.		23,789 13 0, January and March 1905.	....
				Part III.				
2904	Pargana taraf Bisuan, mahal Garahar, &c., hajapti No. 147.	814 6 0	Entire ...	... ..	Panchanon Mirdhya		262 6 0	..... Malguzari right will be sold.

Midnapore, the May 1905. J. N. Roy, Covd. Deputy Collector in charge.

Notification B.

NOTICE is hereby given under section 5, Act XI of 1859, that unless the arrears mentioned below are paid on or before the next latest date of payment, viz., the 28th June 1905, the undermentioned estates or shares of estates in the district of Midnapore will be put up for sale at the office of the Collector of that district on the 30th June 1905, at 12 o'clock noon for the said arrears.

When in columns 5, 7 and 9 of the appended statement it is stated that only a share is to be sold, it is to be understood that a separate account is kept for that share, and that the other share or shares in the estate are excluded from the sale.

Touzi No.	Name of mahal and pargana.	Sadar jama of the whole estate.	Whether the whole estate is to be sold.	If only a share is to be sold, specification of such share or shares.	Names of proprietors of property to be sold.	If only a share is to be sold, the sadar jama of such share.	If the whole estate is to be sold, the arrears due from it.	If only a share is to be sold, the arrears due from it.	Nature and amount of demand for which to be sold.
1	2	3	4	5	6	7	8	9	10
478	Pargana Chandrakona, mahal Kuldaha.	Rs. A. P. 10,784 7 2	.....	Separate account No. 1, 4a. 5g. 1ch. 1k. share of the mahal. All other shares than that specified will be excluded from sale.	Paran Ch. Ray and others.	Rs. A. P. 2,675 13 6	Rs. A. P.	Rs. A. P. 144 9 0	Rs. A. P. Revenue— 144 9 0
944	Pargana Kasijora, mahal Gumukpota.	3,185 0 0 including police.	.. ..	Separate account No 1. 8 annas share of the mahal. All other shares than that specified will be excluded from sale.	Munimuhun Ray ...	1,592 8 0 including police.	.....	743 2 0 including police.	Revenue— 743 8 0 Police— 5 10 0 Cess— 48 15 8 Embankment— 84 0 0
2268	Pargana Sabong, mahal Palpara.	733 3 6	Entire ...	.....	Stya. Tarangini Dasi and others.	... ..	171 13 6 January and March 1905.	.....	Revenue— 171 13 6 Cess— 13 14 6

Midnapore Collectorate, the May 1905. J. N. Roy, Covtd. Deputy Collector in charge.

Notice of Sale.

NOTICE is hereby given, under sections 6 and 13 of Act XI of 1859, that the undermentioned estates and shares of estates in district of 24-Parganas will be put up for sale at the office of the Collector of that district on the 27th June 1905 at 12 o'clock noon for arrears of revenue and other demands which by law are realizable as arrears of land revenue.

When in columns 5, 7 and 9 of the appended statement it is stated that only a share is to be sold, it is to be understood that separate account is kept for that share and that other share or shares are excluded from sale.

Consecutive No.	Tauzi No.	Name of pargana and mahal.	Sadar jama of the whole estate.	Whether the whole estate is to be sold.	If only a share is to be sold, the specification of such share.	Names of proprietors of the properties to be sold.	If only a share is to be sold, the sadar jama of such share.	If the whole estate is to be sold, the arrears due from it.	If only a share is to be sold, the arrears due from it.
1	2	3	4	5	6	7	8	9	10
			Rs. A. P.				Rs. A. P.	Rs. A. P.	Rs.
1	1	Magura, Chetla and others.	5,423 9 3	.....	13a. 15g. 3k. 1kg. 6t. of the entire estate minus 8a. in each of the mauzas as Srirampore, Baghirghola and Rajeb Molla's Chak.	Kali Chandra Roy Choudhury and others.	1,161 9 10½	.....	847
2	2	Magura, kismat Kangonberia and others.	2,688 15 2½	.....	4a. 5g. 2k. 5½d. of the entire estate minus 4a. 5g. 2k. 5½d. of mauzas Chetla and Alipore.	Kali Nibaran Roy Choudhury.	758 11 11½	.....	283
3	3-1	Magura, Laskarpore and others.	8,289 12 6½	..	8a. share, excluding 10a. of the entire estate.	Bindoobashini and Gonesh Jononi Debi guardian of Rajendro Kumar Roy Choudhury.	3,108 10 7½	.. ..	1,312
4	9-1	Magura, kismat Joolpia and others.	3,492 1 3	...	Excluding 10a., remaining 6a. share.	Ditto ...	1,307 7 9½	. .	471
5	9	Magura, kismat Chetla and others.	810 0 0½	Whole	.....	Surendro Nath Roy and others.	.	156 11 1½	...
6	10	Ditto ...	809 10 1½	Do. ...	.....	Ram Kali Roy Choudhury and others.	.....	98 4 0	.
7	13	Ditto ...	810 11 3½	Do. ..	. ..	Mohit Kali Debi and others.	. ..	198 5 11½	...
8	15	Magura, kismat Khariberia and others.	4,078 14 11½	.	Excluding 3a., remaining 13a. share.	Kali Shohai Roy Choudhury and others.	3,312 13 8½	.....	970
9	15-1	Ditto ...	4,078 14 11½	....	Excluding 13a., remaining 2a. share.	Kali Pado Roy Choudhury.	766 1 3	....	266
10	53	Magura, kismat Rameswarpur and others.	3,196 1 2		Residuary share, *i.e.*, entire estate minus shares composed in the separate account Nos. 1 to 9.	Dwija Das Bhaduri, Manager, Court of Wards, and another.	2,102 1 0½	.	651
11	56	Magura, kismat Srirampore.	3,126 5 7½	.....	Excluding 1a. 15g. 2k. 2d., remaining 14a. 4g. 1k. 3kr. 1d.	Kristo Prosonno Mondal and others.	2,778 15 8½	. .	940
12	85	Magura, kismat Abgachia and others.	984 14 7	.....	The whole estate minus 7a. share in mauza Chak Kantalia, and 2a. 1g. 2k. share in each of the mauzas kismat Babanpur and Nona.	Trailokhinath Barua ...	861 11 10	.....	270
13	120	Baridhati, kismat hadalia and others.	5,093 5 3½	Whole ...	.. ..	Harihar Chatterjee ...	... ..	1,846 13 1½	..
14	152	Khaspore, Srirampore and others.	703 8 8	.....	14a. 4g. 1k. 2kt. 7d. share, excluding 1a. 15g. 1k. 1kr. 2d.	Kristo Prosonno Mondle and others.	625 5 11	.....	128
15	230	Khaspore, Dhakuria and others.	1,064 11 10	. .	16a. share minus 1a. 15g. 2k. 9d. share in each of the mauzas Garia and Berju.	Sarat Kumari Dassi and others.	1,046 10 9	.....	48
16	250-9	Midanmolla, Barulpore and others.	52,620 2 7	.....	1a. 11g. 4d. share, excluding 14a. 8g. 3k. 3d. share.	Jitendro Kumar Roy Chowdhri.	5,115 13 7	.....	158
17	251	Modan Molla, Rajpur and others	1,075 2 2½	.	11a. 11g. 1kr. 1d. share, excluding 4a. 8g. 3k. 1kr. 2d. share.	Kedar Nath Roy Choudhury and others.	776 7 10	... ..	84
18	253	Pargana Mudan Molla, Kharampara and others.	1,079 3 6	.....	11a. 11g. 1kr. 1d. share, excluding 4a. 8g. 3k. 1kr. 2d.	Kedernath Roy Choudhury and others.	779 7 0		46
19	314	Muragacha, Harinarainpore and others.	13,200 12 6½	...	7a. 11g. 2k. 2kg. 18t. 1k. share of the entire estate	Banki Behari Mandal and others.	5,747 4 5	... ..	592
20	315-1	Muragacha, Roghunathpore and others.	10,229 15 6	.....	18g. 3k. share, excluding 15a. 1g. 1k. share.	Kristo Prasanna Mandal and others.	599 6 7½	.....	198
21	315-3	Ditto	10,229 15 6	..	Excluding 15a. 19g. 2k 2kr. 2d. share, remaining 2a. 1k. 1d. share.	Goni Kisore Mandal and others.	1,287 0 11½	.....	676
22	315-11	Ditto ...	10,229 15 6	.....	Excluding 14a. 17g. 2k. share, remaining 1a. 2g. 2k. share.	Apurba Kumari Dasi ...	719 4 9	. ....	378
23	326	Muragacha, Bistoopore and others.	2,448 3 0	.....	Excluding 15a. 18g. share, remaining 3g. share.	Jotindra Nath Roy Choudhury and others.	1,312 21½	.....	688
24	327-1	Muragacha, Dharapare and others.	1,064 7 4	.. .	Ditto	Uma Prosad Ghose ..	532 3 8	.....	282
25	346	Balia Santoshbati and others.	5,631 0 9		Excluding 2a. 18g. 3k. 2kr. 2d., remaining 13a. 6g. 1kr. 1d. share.	Brojendranath Mandal and others.	4,896 15 4	.....	296
26	385	Azimabad Hudarash khali and others.	19,424 8 1½	.....	In each of the mauzas except Khakramuri 18g. share.	Gopikisore Mandal and others.	900 2 7½	.....	516
27	385-1	Ditto ...	19,424 8 1½	... .	Ditto 1a. 2g. 3k. share ...	Nobokisore Mandal and others.	1,388 12 7	. .	388
28	385-6	Ditto ..	19,424 8 1½	.	Excluding 15a. 4g 2k. 2kr. remaining 15g. 1k. 1kr. share.	Brojendra Nath Mandal	928 8 7½	.....	518
29	385-5	Ditto ...	19 24 8 1½	.....	1a. 1g. 2k. 1d. share of the entire estate.	Gopi Kisore Mandal and others.	1,302 10 7½	.....	728
30	385-6	Ditto ...	19,424 8 1½	.....	Excluding 15a. 4g. 2k 2kr., remaining 15g. 1k. 1kr. share.	Kristo Prosanna Mandal	928 8 7½	.....	518
31	385-9	Ditto ...	19,424 8 1½	.....	Excluding 14a 17g. 2k., remaining 1a. 2g. 2k. share.	Apurba Kamari Dasi ...	1,302 8 7½	.....	701
32	385-10	Ditto ...	19,424 8 1½	.....	Excluding 15a. 4g. 2k. 2kr., remaining 15g. 1k. 1kr. share.	Sarat Kumari Dasi ...	928 8 7½	. ..	259
33	385-11	Ditto ...	19,424 8 1½	.....	In all the mauzas except mauza Khagramori 15g. 1k. 1kr. share.	Kalidas Adak and others.	807 6 10	... .	284
34	385-12	Ditto ...	19,424 8 1½	... ..	Excluding 15a. 10g. share remaining 10g. share.	Nobokisore Mandal and others.	605 9 5	.....	334
35	385-14	Ditto ...	19,424 8 1½	.....	Excluding 15a. 5g., remaining 15g. share.	Chandi Charan Mandal and others.	908 6 1	... ..	507
36	388-1	Balia Moloyapore and others.	8,326 9 0	...	Excluding 14a. 17g. 2k., remaining 1a. 2g. 2k. share.	Nobokisore Mandal and others.	585 8 2½	.....	160
37	388-3	Ditto ..	8,326 9 0	. .	Excluding 14a. 18g. 1k. 2kr. 2d., remaining 1a. 1g. 2k. 1d. share.	Gopi Kisore Mandal and others.	560 3 4½	.....	183
38	389-1	Balia Santoshpore and others.	9,401 5 10	.....	Excluding 14a. 17g 2k., remaining 1a. 2g. 3k. share.	Radha Binod Mandal and others.	663 5 10½	.....	171
39	38.4	Ditto	9,401 5 10		Excluding 14a. 18g. 1k. 2kr. 2d., remaining 1a. 1g. 2k. 1d. share.	Gopi Kisore Mandal and others.	614 11 3½	.....	176

Touzi No.	Name of pargana and mahal.	Sadar jama of the whole estate.	Whether the whole estate is to be sold.	If only a share is to be sold, the specification of such share	Names of proprietors of the properties to be sold.	If only a share is to be sold, the sadar jama of such share.	If the whole estate is to be sold, the arrears due from it.	If only a share is to be sold, the arrears due from it.
1	2	4	5	6	7	8	9	10
		Rs. A. P.				Rs. A. P.	Rs. A. P.	Rs. A. P.
389-12	Balia, Santoshpur and others.	9,401 5 10	.....	Excluding 14a. 17g. 2k., remaining 1a. 8g. 2k. share.	Apurba Kumari Dassi	663 5 11	.....	342 14 4
391-5	Murrgacha, Gomukhi, and others.	5,438 8 6	.....	Excluding 13a. 1½g. 2k. 3kr., 3d., remaining 3a. 1k. 1d. share.	Gopikisor Mandal and others.	697 2 0	.....	239 0 11
391-6	Ditto	5,438 8 6	.....	Excluding 14a. 6g. 2k. 2kr. remaining 1a. 14g. 1k. 1kr. share.	Kshirodamayee Dassi, widow of late Sashi Bhusan Biswas.	876 14 11	.....	157 15 2
392	Azimabad, Huda Joychandipur.	8,313 7 8	.....	Excluding 13a. 6g. 2k. 2kr., remaining 2a. 18g. 1k. kr. share.	Nabakisor Mandal and others.	1,385 9 2	.....	556 7 8½
392-1	Ditto	8,313 7 8	.....	Excluding 12a. share, remaining 4a. share.	Radhabinod Mandal and others.	2,078 5 11	.....	1,544 15 1
392-3	Ditto	8,313 7 8	.....	Excluding 13a. 6g. 2k. 2kr., remaining 2a. 13g. 1k. 1kr. share.	Chandi Charan Mandal and others.	1,385 9 4	.....	556 10 0
392-4	Ditto	8,313 7 8	.....	Ditto ditto ...	Nabakisor Mandal and others.	1,385 9 4	.....	556 9 11
394-6	Azimabad, taraf Kisorepore.	7,108 12 11	.....	Excluding 14a. 6g. 2k. 2kr., remaining 1a. 13g. 1k. 1kr. share.	Srimaty Kshirodamoyi Dassi.	740 8 1	.....	154 7 9
395	Azimabad, taraf Madhabpore.	14,667 13 11	.....	Excluding 6a., remaining 10a. share.	Balkuntha Nath Dey, and others.	9,161 2 8	.....	2,433 9 4
395-1	Ditto ...	14,667 13 11	.....	Excluding 10a., remaining 6a. share.	Srimati Kiran Sashi Dasi, guardian of Kamal Kristo and Bata Kristo Mandal.	5,496 11 3	.....	2,433 8 8
400	Balia Ramchandrapur and others.	747 11 1	Whole ...	.....	Radha Mohan Mandal...	.....	235 7 3	.....
401-6	Azimabad Huda Ramkristapur and others.	8,941 9 7	.....	Excluding 14a. 14g. 2kr., remaining 1a. 5g. 3k. 1kr. share.	Gopi Kissore Mandal and others.	721 13 6½	.....	130 0 10½
401-7	Ditto ...	8,941 9 7	.....	Excluding 14a. 17g. 3k., remaining 1a. 2g. 2k. share.	Krista Lal Mandal and others.	628 11 3½	.....	33 4 4
401-11	Ditto ...	8,941 9 7	.....	Ditto ditto ...	Apurba Kumari Dassi...	628 11 3½	.....	224 15 10½
403	Azimabad, taraf Patherbaria, and others.	5,143 3 3	.....	Excluding 9a. 14g. 2k. 2kr., remaining 6a. 5g. 1k. 1kr. share.	Ranka Behari Mandal and others.	2,014 6 6½	.....	351 11 5½
403-2	Ditto ...	5,143 3 3	.....	Excluding 9a. 6g. 2k. 2kr., remaining 6a. 13g. 1k. 1kr. share.	Kshiroda Mayee Dasi, widow of Sashi Bhusan Biswas.	2,143 15 11	.....	418 4 8
411	Magura, kismut Dhannyakhola and others.	2,518 5 7	Whole ...	.....	Manilal Banerjea ...	.....	752 5 3	.....
1147	Modanmolla Komalpore and others.	1,062 10 3	.....	Excluding 4a. 8g. 3k. 1kr. 2d., remaining 11a. 11g. 1kr. 1d. share.	Durgadas Roy Chowdhury and others.	781 13 7	.....	33 13 1

24-Parganas Collectorate, Alipore, the 22nd May 1905. J. H. BERNARD, Collector.

Notification A.

NOTICE is hereby given, under sections 6 and 13, Act XI of 1859, that the undermentioned estates and shares of estates in the district of Birbhum will be put up for sale at the office of the Collector of that district on the 24th June 1905 at 11 A.M. for arrears of revenue and other demands, which by law are realisable as arrears of land revenue.

When in columns 5, 7 and 9 of the appended statement it is stated that only a share is to be sold, it is to be understood that a separate account is kept for that share, and that the other share or shares in the estate are excluded from the sale.

Touzi No.	Name of mahal and pargana.	Sadar jama of whole estate.	Whether the whole estate is to be sold.	If only a share is to be sold, specification of such share or shares.	Names of proprietors of property to be sold.	If only a share is to be sold, the sadar jama of such share.	If the whole estate is to be sold, the arrears due from it.	If only a share is to be sold, the arrears due from it.
1	2	3	4	5	6	7	8	9
		Rs. A. P.				Rs. A. P.		Rs. A. P.
17	Kagash, pargana Mouresswar Sabek.	17,183 13 9	.....	Residuary share 2a. 19g. 3k. 1kt. and 6d. share of mauzas Andahara Chuk, Alal-Bandi, Ishabpur, Ishanpur *alias* Ishakpur, Uttermath, Bhuti, Kalyanpur, Kagash, Kartickguni, Kalipur, Kuchunghata, Kushumjatra, Kusaipur, Kalatopur, Khatlepur, Khagra Chuk, Khurja, Chandpur, Jamkala, Jalla, Jhikordaha Chuk, Thakurgaown Chuk, Tiko daha, Tilpara Chuk, Dasi Rajejani-Rajeupur, Dhobagaon, Dhobajole, Nowapara, Nanas Chuk, Nirisha, Paikpara, Pargaon, Pasala, Bahara Chuk, Belia, Bipra-Salgoria, Bulcha Chuk, Bhatipur, Moldipur, Mallati, Mahamadpur Chuk, Mohkdipur Chuk, Mohespur, Mallgaon Chuk, Metery, Rasulgunj, Rajnilav Chuk, Rupasbi, Salgoria, Sripur, Salumath, Horikora, Horisapur, Hazrapur, and 8a. 8g. 10kag of Banara and Ramadoorgunj. All other shares than that specified will be excluded from the sale.	Anu Tosh Mookerjee and others.	Rs. A. P. 2,945 15 0	....	Rs. A. P. 158 9 10

Birbhum Collectorate, Suri, the 4th May 1905. S. C. MUKERJEE, Collector.

Notification A of sale.

NOTICE is hereby given, under sections 6 and 13, Act XI of 1859, that the undermentioned estates and shares of estates in the district of Rangpur will be put up for sale at the office of the Collector of that district on the 22nd June 1905, at 12 noon, for arrears of revenue and other demands, which by law are realizable as arrears of land revenue.

Tauzi No.	Name of mahal and pargana.	Sadar jama of whole estate.	Whether the whole estate is to be sold.	If only a share is to be sold, specification of such share or shares.	Names of proprietors of property to be sold.	If only a share is to be sold, the sadar jama of such share.	If the whole estate is to be sold, the arrears due from it	If only a share is to be sold, the arrears due from it.
1	2	3	4	5	6	7	8	9
163	Kundi, pargana Kundi, 7 annas.	Rs. A. P. 19,078 10 3	No ...	The separate account bearing No. 163-1 comprising 16 annas of each of the mauzas Barabari Raghu, Budha, Gobardhan, Ghose Raghab, Jayram, Lakshan Kisamat chhota, Rajaram, Bhaja Pukhari, Digaltari, Kashichak, Khalia, Lalu Kisamat, Sobandighi, Purandar Kashinathpur, and Khaleya kisamat and 8 annas share of each of the mauzas Fatehpur, Gopinathpur, Jhaubar, Krishnapur, Ranipur, Sripur *alias* Srichandra Barakali Jama and Khalia.	Nabin Kishori Chaudhurani and others.	Rs. A. P. 1,471 1 11	.....	Rs. A. P. 125 3 1

NOTE.—All other shares besides that specified will be excluded from the sale.

Rangpur, the 28th April 1905. T. EMERSON, Collector.

Notification A.

NOTICE is hereby given under sections 6 and 13, Act XI of 1859, that the undermentioned estates and shares of estates in the district of Dacca will be put up for sale at the office of the Collector of that district on the 23rd June 1905 at 12 o'clock noon for arrears of revenue and other demands, which by law are realizable as arrears of land revenue:—

When in columns 5, 7 and 9 of the appended statement it is stated that only a share is to be sold, it is to be understood that a separate account is kept for that share, and that the other share or shares in the estate are excluded from the sale.

Tauzi No.	Name of mahal and pargana.	Sadar jama of whole estate.	Whether the whole estate is to be sold.	If only a share is to be sold, specification of such share or shares.	Names of proprietors of property to be sold.	If only a share is to be sold, the sadar jama of such share.	If the whole estate is to be sold, the arrears due from it.	If only a share is to be sold, the arrears due from it.
1	2	3	4	5	6	7	8	9
		Rs. A. P.		Residue— As. gds. kr. kt.		Rs. A. P.		Rs. A. P.
275	Pargana Talipabad, Siv Prosad.	1,146 10 7½		Residue— 13 6 3 2	Jasoda Lal Roy and others.	955 3 10½	.....	14 10 3
546	Pargana Rokanpur, Tappe Bowkanda John Hollo.	3,078 6 7½	...	9 13 1 1	Ditto	1,360 0 5	.....	139 6 9
9966	Pargana Ran Bhowal Mirali Haidar.	1,125 5 0	.....	Residue	Maharaja Surja Kant Acharjee and others.	618 4 4	.....	12 3 11

Dacca Collectorate, the 12th May 1905. MOHENDRA CHUNDER MOZUMDAR, Deputy Collector in charge

Notification A.

NOTICE is hereby given, under sections 6 and 13, Act XI of 1859, that the undermentioned estates and shares of estates in the district of Chittagong will be put up for sale at the office of the Collector of that district on the 17th July 1905 at 12 noon for arrears of revenue and other demands, which by law are realizable as arrears of land revenue.

When in columns 5, 7 and 9 of the appended statement it is stated that only a share is to be sold, it is to be understood that a separate account is kept for that share.

Tauzi No.	Name of mahal and pargana.	Sadar jama of whole estate.	Whether the whole estate is to be sold.	If only a share is to be sold, specification of such share or shares.	Names of proprietors of property to be sold.	If only a share is to be sold, the sadar jama of such share.	If the whole estate is to be sold, the arrears due from it.	If only a share is to be sold, the arrears due from it.
1	2	3	4	5	6	7	8	9
		Rs. A. P.				Rs. A. P.	Rs. A. P.	Rs. A. P.
361								
361	Thana Satkania, taraf mauza Amirabad, Babait taraf Mangaram Hazari.	1,401 13 3	Only a share is to be sold.	Residuary share No. 2 ...	Taran Sing Hazari and Nm. Golap Kumari Thakurani.	908 15 6	.....	170 4 11
367								
368								
368	Thana Bhatiary, taraf Ahamedullah Nasrullah.	780 14 8	Whole estate is to be sold.	.....	Fazal Rohaman and Rajjab Ali.	.....	136 8 2	.....
369								

NOTE.—The figures shown in columns 8 and 9 represent the arrears remaining unpaid on the 25th May 1905.

Chittagong Collectorate, the 8th June 1905. F. P. DIXON, Collector.

Advertisement of Sale.

NOTICE is hereby given that the undermentioned plots of land, no longer required by Government, situated along the South Behar Section Railway, in the district of Monghyr, will be put up to sale at 10 o'clock on the 8th day of July 1905, corresponding with the 21st Asadh 1312 Fusli, at Barhi, village Indupur.

The purchasers of the several plots of land will be subject to the following conditions:—

1st.—The purchasers will have no power to make any excavations on the land nearer than 15 feet from the railway fencing, or plough the land closer than 3 feet from its foundation.

2nd.—If the amount of purchase-money does not exceed Rs. 100, the whole amount must be paid down at once.

3rd.—If the amount of purchase-money exceed Rs. 100, one-fourth of the amount must be immediately deposited. If the balance be not paid by noon of the fifteenth day after the sale, reckoning the day of sale as one, or if that day be a close holiday, then by noon of the first succeeding office day, the sale shall be cancelled, the sum deposited being forfeited to Government, and the lot again put up for sale at the risk of the defaulting purchaser, after issue of advertisement as in the case of original sale.

4th.—The plots of land will be sold revenue-free to the highest bidders.

5th.—The purchasers shall be put in possession on receipt by the Collector of the orders of the Board confirming the sale.

Consecutive number of lot.	Name of district.	Pargana and mauza.	Number of mile on which land is situate.	Situated on which side of the railway.	Approximate area of lot in bighas and in acres. B. K. C.	A. R. P.	Land excluded from sale from each lot. Reasons for exclusion.	A. R. P.	Commencement and termination of lot.	Boundary of lot.
1	2	3	4	5	6		7		8	
1	Monghyr	Indupur, pargana Salemabad.	.....	South of the railway line running from Howrah to Dehli.	3 17 15½	3 1 16·800	.....	.....	From 1 to 4.	*North*—Orchards belonging to Kali Singh, Ghulha Dusadh, Muso Singh in Barhi and lote of Jagdeo Singh in relinquished B class land. *South*—Waste land and relinquished B class lands. *East*—Waste land. *West*—Railway fencing.
2	Ditto ...	Ditto ..	..	Ditto ...	3 1 4½					
3	Ditto ...	Ditto ...	.....	Ditto ...	0 15 0					
4	Ditto ...	Ditto ...	.....	Ditto ...	2 3 16½					
					10 2 16¼					

Monghyr, the 9th May 1905.

U. GUHA, *for* Collector.

Advertisement of Sale.

NOTICE is hereby given that the undermentioned plots of land, no longer required by Government, situated along the Nirmali Station of the Tirhut State Railway, in the district of Bhagalpur, will be put up to sale at 11 o'clock on the 30th June 1905, corresponding to 13th of Assar Fasli 1312 at Supaul Katchery, district Bhagalpur.

The purchasers of the several plots of land will be subject to the following conditions:—

1st.—The purchasers will have no power to make any excavations on the land nearer than 15 feet from the railway boundary, or to plough the land closer than 3 feet from its foundation.

2nd.—If the amount of purchase-money does not exceed Rs. 100, the whole amount must be paid down at once.

3rd.—If the amount of purchase-money exceed Rs. 100, one-fourth of the amount must be immediately deposited. If the balance be not paid by the noon of the fifteenth day after the sale, reckoning the day of sale as one, or if that day be a close holiday, then by noon of the first succeeding office day, the sale shall be cancelled, the sum deposited being forfeited to Government, and the lot again put up for sale at the risk of the defaulting purchaser, after issue of advertisement, as in the case of original sale.

4th.—The plots of land will be sold revenue-free to the highest bidder.

5th.—The purchasers shall be put in possession on receipt by the Collector of the orders of the Board confirming the sale.

Consecutive lot No.	Name of district.	Pargana and mauza.	Number of mile on which land is situate.	Situated on which side of the railway.	Approximate area of lot in bighas and in acres. B. K. C.	A. R. P.	Land excluded from sale from each lot. Reasons for exclusion.	A. R. P.	Commencement and termination of lot.	Boundary of lot.
45, 46, 47, 48, 49, 50, 51, 52, 53, 54, 55, 56, 57, 58, 59, 60, 61, 66 to 67, 69 to 114, 116 to 121, 125 to 129, 132, 133, 138, 140 and 141.	Bhagalpur	Mauza Nirmali, pargana Naredigar.	67	North ...	44 7 8 (Standard).	14·67 0 0	.....	.....	.....	*North*—Mauza Nirmali. *South*—Land in possession of the railway. *East*—Road to Nirmali. *West*—Mauza Nirmali.

Bhagalpur, the 15th May 1905.

H. COUPLAND, Collector of Bhagalpur.

Advertisement of Sale.

NOTICE is hereby given that the undermentioned plots of land, no longer required by Government, situated along the Hajipur-Katihar Extension Railway, in the district of Monghyr, will be put up to sale at 10 o'clock on 8th day of July 1905, corresponding to the 21st Asarh 1312 Fasli, at Mohanpur, pargana Naipur.

The purchasers of the several plots of land will be subject to the following conditions:—

1st.—The purchasers will have no power to make any excavations on the land nearer than fifteen feet from the railway fencing, or plough the land closer than three feet from its foundation.

2nd.—If the amount of purchase-money does not exceed Rs. 100, the whole amount must be paid down at once.

3rd.—If the amount of purchase-money exceeds Rs. 100, one-fourth of the amount must be immediately deposited. If the balance be not paid by noon of the fifteenth day after the sale, reckoning the day of sale as one, or if that day be a close holiday, then by noon of the first succeeding office day, the sale shall be cancelled, the sum deposited being forfeited to Government, and the lot again put up for sale at the risk of the defaulting purchaser, after issue of advertisement, as in the case of original sale.

4th.—The plots of land will be sold revenue-free to the highest bidders.

5th.—The purchasers shall be put in possession on receipt by the Collector of the orders of the Board confirming the sale.

Consecutive lot No.	Name of district.	Pargana and mauza.	Number of mile on which land is situate.	Situated on which side of the railway.	Approximate area of lot in bighas and in acres.		Land excluded from sale from each lot.		Commencement and termination of lot.	Boundary of lot.
					B. K. C.	A. R. P.	Reasons for exclusion.	A. R. P.		
1	2	3	4	5	6		7		8	9
1	Monghyr	Mohanpur, pargana Naipur.	2 of the Hajipur-Katihar extension.	North ...	0 5 11	.....	.....	.....	From 1 to 3 ...	*North.*—Girja Chaudhry's land. *South.*—Waste land. *East.*—Railway fencing. *West.*—Alkhu Chaudhry's land.
2	Ditto ...	Ditto ...	Ditto ...	Do. ...	0 5 6	.....	.....	.....	.....	*North.*—Girja Chaudhry's land. *South.*—Railway fencing. *East.*—Railway fencing. *West.*—Girja Chaudhry's land.
3	Ditto ...	Ditto ...	Ditto ...	Do. ...	0 0 13	.....	.....	.....	.....	*North.*—Girja Chaudhury's land. *South.*—Railway fencing. *East.*—Railway fencing. *West.*—Girja Chaudhury's land.

Monghyr, the 9th May 1905.

UMA PRASANNA GUHA, *for* Collector.

Notification A.

NOTICE is hereby given, under sections 6 and 13, Act XI of 1859, that the undermentioned estates and shares of estates in the district of Puri will be put up for sale at the office of the Collector of that district on the 10th July 1905 at 12 noon for arrears of revenue and other demands which by law are realisable arrears of land revenue.

When in columns 5, 7 and 9 of the appended statement it is stated that only a share is to be sold, it is to be understood that a separate account is kept for that share, and that the other share or shares in the estate not specifically mentioned in column 5 are excluded from the sale.

Tauzi No.	Name of mahal and pargana.	Sadar jama of whole estate.	Whether the whole estate is to be sold.	If only a share is to be sold, specification of such share or shares.	Names of proprietors of property to be sold.	If only a share is to be sold, the sadar jama of such share.	If the whole estate is to be sold, the arrears due from it.	If only a share is to be sold, the arrears due from it.
1	2	3	4	5	6	7	8	9
		Rs. A. P.				Rs. A. P.	Rs. A. P.	Rs. A. P.
166 / 2	Taluk Ganeswarpur, pargana Banchas.	1,019 0 0	.....	Kismat 7a.	Chandamoni Debya, mother and guardian of Hanuman Khuntia (minor).	703 5 0	.....	79 5 0 Due for kist April 1906.
129	Killa Kokel, pargana Chabiskud.	1,706 0 0	Whole ...	.....	Balaram Das Bhagat and others.	.....	854 0	Ditto.
236 / 7	Taluk Lakshmiprasad, pargana Kurlow.	1,089 0 0	.....	Kismat 8a. 7p. 2k. 15b.	Jagannath Sahu and others ...	858 15 0	.....	5 5 0 Due for kist April 1906.

Puri Collectorate, the 30th May 1905.

J. R. BLACKWOOD, Collector.

Notification A.

NOTICE is hereby given, under sections 6 and 13, Act XI of 1859, that the undermentioned estates and shares of estates in the district of Balasore will be put up for sale at the office of the Collector of that district on the 18th day of July 1905, at 12 o'clock noon for arrears of revenue and other demands which by law are realisable as arrears of land revenue.

When in columns 5, 7 and 9 of the appended statement it is stated that only a share is to be sold, it is to be understood that a separate account is kept for that share.

Tauzi No.	Name of mahal and pargana.	Sadar jama of whole estate.	Whether the whole estate is to be sold.	If only a share is to be sold, specification of such share or shares.*	Names of proprietors of property to be sold.	If only a share is to be sold, the sadar jama of such share.	If the whole estate is to be sold, the arrears due from it.	If only a share is to be sold, the arrears due from it.
1	2	3	4	5	6	7	8	9
576	Taluk Purusottampur, pargana Balikhand.	Rs. A. P. 5,666 0 0	Whole ...	.....	Chaudhuri Ram Chandra Nisankha Mahapatra and others of Purusottampur, pargana Balikhand and others.	Rs. A. P.	Rs. A. P. 140 11 0 1905 April kist.	Rs. A. P. .....
1600	Kh. taluk Guruprasad, pargana Bayang.	1,418 0 0	Do. ...	.....	Munshi Latifur Raheman Ahmed and others of Isafpur, pargana Randiaorgara and others.	.....	38 9 6 1905 April kist.	.....
985 Ijmali.	Taluk Birharpur, pargana Bhera.	2,365 0 0	Share ...	12a. 9p. 16kt. 7b. 1g. 1½ bod.	Radha Charan Mahanti and others of Balimedh, pargana Bheda and others.	1,804 11 4	.....	69 11 6 1905 April kist.
956 Ijmali.	Mal. Damaderpur, pargana Bhera.	2,159 0 0	Do. ...	10a. 4p. 15kt. 12b. 15g. 2k. 3 247/34560 bed.	Chintamoni Nayak and others of Nischintapur, pargana Bheda and others.	1,403 3 10½	.....	16 12 1 1905 April kist.
220 Ijmali	Taluk Malda, pargana Dhamnagar.	3,420 8 0	Do. ...	13a. 10p. 10kt. 12b. 15g. ...	Chaudhuri Birabhadra, Narindra Mahapatra and others of Kurigan, pargana Dhamnagar and others.	2,066 14 10	.....	166 6 7½ 1905 April kist.
1515	Taluk Benotara, pargana Kalma.	1,053 0 0	Whole ...	.....	Pankaja Panda and others, of Samdihi, pargana Dolagram and others.	.....	203 3 11½ 1905 April kist.	.....
1341 6	Mahal Kasba Kamarda, pargana Kamardachaur.	3,565 0 0	Share ...	3a. 7p. 5kt. 15b. 15g. 2k 1kt. 4b. 18g. 1kt. 2b. 7g. 2k. 9b. 7g. 3kt.	Srichandan Bhuiyan Brindaban Chandra Rai, of Gad Rentrapur, pargana Sahabandar and others.	803 15 5½	.....	402 1 6 1905 April kist.
1344 3	Mal. Kusuda, pargana Kamardachaur.	1,693 0 0	Do. ...	8a.	Srichandan Bhuiyan Brindaban Chandra Rai, of Gad Rentrapur, pargana Sahabander.	846 8 0	.....	423 8 0 1905 April kist.
318	Taluk Napang, pargana Munjuri.	665 12 5	Whole ...	... ..	Gopimohan Rai, common Manager of Mahasay Radhakanta Rai and others, of at present Naripur, pargana Randiaorgara.	...	231 11 6 1905 April kist.	.....
8	Taluk Sarmanga, pargana Randiaorgara.	1,429 0 0	Do. ...	.....	Munshi Latifur Rahaman Ahmed of Isafpur, pargana Randiaorgara and others.	.....	133 9 0 1905 April kist.	.....
1031	Taluk Madhabnagar, pargana Randiaorgara.	1,984 0 0	Share ...	12a. 9p. 13kt. 2b. 17g. 1k. 2kt. 4b. 7g. 1k.	Raghunath Panigrahi and others of Sriganga, pargana Bayang and others.	1,587 13 11	.....	13 4 16½ 1905 April kist.
45 Ijmali.	Ma. Darara, pargana Senaut.	1,304 0 0	Do. ...	10a. 8p.	Jadunath Prasad De, of Damoderpur, pargana Sunhat, and others.	869 5 4	... ..	434 10 7½ 1905 April kist.
48	Taluk Belna, pargana Senaut.	1,084 0 0	Whole ...	.....	Munshi Latifur Raheman Ahmed of Isafpur, pargana Randiaorgara and others.	.. ...	471 6 8 1905 April kist.	.. .
124 Ijmali	Ar. Dograi, ma. Dolsahi, pargana Senaut.	9,889 0 0	Share ...	3a. 11p. 12kt. 1b. 10g. 2k. ...	Ghanasyam Mahapatra of Nasalapur, pargana Bayang and others.	2,451 14 4	.....	228 12 8 1905 April kist.
131 Ijmali	Taluk Ramkrishnapur, pargana Senaut.	696 0 0	Do. ...	11a. 1p. 16kt. 3b. 17g. 2k. 1½bed.	Adhikari Sadanand Das of Okra, pargana Senaut and others.	694 7 4	.....	115 8 11 1905 April kist.
1368	Ml. Bistnupur, pargana Sahabander.	3,816 0 0	Whole ...	.....	Srichandan Bhuyan Brindaban Chandra Rai of Gad Rantrapur, pargana Sahabander.	.....	1,908 0 0 1905 April kist.	.
682 Ijmali	Taluk Bistnupur, pargana Siary.	1,455 0 0	Share ...	6a.	Prankristna Puthal of Brahmania, pargana Armala and others.	540 6 0	.....	13 8 3 1905 April kist.
150 Ijmali	Taha Purusanda, pargana Soso.	9,238 0 0	Do. ...	15a. 14kt. 3b.	Balabhadra Prasad Das Rajkumar Bairiganjan Bhuyan Mahapatra of Gopinathpur, killa Mangalpur, pargana Ranchas and others.	8,713 9 3	.....	66 3 4½ 1905 April kist.

* All other shares than that specified will be excluded from the sale.

Balasore Collectorate, the 2nd June 1905.

J. COBBES, Offg. Collector.

Advertisement of Sale.

NOTICE is hereby given that the proprietary right of Government, as specified in the conditions of sale below, to the undermentioned estates situate in the district of Jessore will be put up to sale at the sub-divisional head-quarters, Jhenida, on the 18th July 1905, corresponding with the 2nd Sravan 1312 (B.S.).

The purchaser will be subject to the following conditions of sale:—

Conditions of Sale.

1st.—The estate to be sold to the highest bidder above the upset price, which will be fixed by the Collector at the time of sale. The purchaser of these estates will be considered as the proprietor of the estate, and the entire proprietary right of Government in such estate will be transferred to him, subject to the revenue fixed in perpetuity.

2nd.—The sale to be subject to existing leases and to the rights conferred by the settlement proceedings and by the laws in force, and purchasers to be bound to respect the rights of resident cultivators who have signed the schedule of assessment prepared by the Revenue authorities.

3rd.—If the amount of purchase-money do not exceed Rs. 100, the whole amount to be paid down at once.

4th.—If the amount of purchase-money exceed Rs. 100, one-fourth of the amount bid to be immediately deposited. If the balance be not paid by noon of the fifteenth day after the sale, reckoning the day of sale as one, or, if that day be a close holiday, then by noon of the first succeeding office day, the sale is to be cancelled (the sum deposited being forfeited to Government), and the estate to be again put up to sale at the risk of the defaulting purchaser after issue of advertisement, as in the case of original sale.

Number in the district roll.	Name of estate and pargana.	Approximate area in acres.	Government revenue assessed.	REMARKS.
Tauzi No.		A. R. P.	Rs. A. P.	
313(*a*)	Gopalpore	102 2 22	201 15 0	
4126	Ashurhut	13 0 27·7	33 11 2	
4095	Ditto	1 1 38	2 11 6	
3977	Armukhi	0 3 17	1 9 6	
4169	Srifaltola and Bademalanchi ...	30 0 19·52	100 7 0	
3976	Armukhi	2 1 20·16	9 4 0	
3·73(*a*)	Khedapara	7 3 39	25 0 0	
3383	Khajurah	51 0 2·88	128 8 9	
3261	Khedapara	2 2 3·84	4 14 6	
3311	Suti-Mamunsia	1 1 11·2	3 8 0	

Jessore Collectorate, the 2nd June 1905. S. K. AGASTI, Collector.

Advertisement.

NOTICE is hereby given that the proprietary right of Government, as specified in the conditions of sale below to the undermentioned estate, situate in the district of Jessore, will be put up to sale at the Subdivisonal head-quarters Bangaon on the 8th July 1905, corresponding with 24th Ashar 1312 (B.S.).

The purchaser will be subject to the following conditions of sale:—

Conditions of Sale.

1st.—The estate to be sold to the highest bidder above the upset price which will be fixed by the Collector at the time of sale. The purchaser of this estate will be considered as the proprietor of the estate, and the entire proprietary right of Government in such estate will be transferred to him, subject to the revenue fixed in perpetuity.

2nd.—The sale to be subject to existing leases and to the rights conferred by the settlement proceedings and by the laws in force, and purchasers to be bound to respect the rights of resident cultivators who have signed the schedule of assessment prepared by the revenue authorities.

3rd.—If the amount of purchase-money do not exceed Rs. 100, the whole to be paid at once.

4th.—If the amount of purchase-money exceed Rs. 100, one-fourth of the amount bid to be immediately deposited. If the balance be not paid by noon of the fifteenth day after the sale, reckoning the day of sale as one, or, if that day be a close holiday, then by noon of the first succeeding office day, the sale is to be cancelled (the sum deposited being forfeited to Government), and the estate to be again put up to sale at the risk of the defaulting purchaser, after issue of advertisement, as in the case of original sale.

Number on the district roll.	Name of estate and pargana.	Approximate area in acres.	Government revenue assessed.	REMARKS.
		A. R. P.	Rs. A. P.	
5344	Hudabishnupur	0 1 18·$^{9}/_{11}$	.....	This estate will be sold revenue-free.
5410	Ditto	1 3 11$^{111}/_{121}$	3 1 9	

Jessore, the 1st June 1905. S. K. AGASTI, Collector.

Advertisement of Sale.

NOTICE is hereby given that the undermentioned plots of land, no longer required by Government, situated along the Hajipur Branch Railway, in the district of Muzaffarpur, will be put up to sale at 1 o'clock on Friday, the 30th June 1905, corresponding with the 13th Jaith of 1312 Fusli, at Muzaffarpur.

The purchasers of the several plots of land will be subject to the following conditions —

1st.—The purchasers will have no power to make any excavations on the land nearer than 15 feet from the railway boundary, or to plough the land nearer than 3 feet from the same.

2nd.—If the amount of purchase-money does not exceed Rs. 100, the whole amount must be paid down at once.

3rd.—If the amount of purchase-money exceed Rs. 100, one-fourth of the amount must be immediately deposited. If the balance be not paid by noon of the fifteenth day after the sale, reckoning the day of sale as one, or if that day be a close holiday, then by noon of the first succeeding office day, the sale shall be cancelled, the sum deposited being forfeited to Government, and the lot again put up for sale at the risk of the defaulting purchaser, after issue of advertisement, as in the case of original sale.

4th.—The plots of land will be sold revenue-free to the highest bidders.

5th.—The purchasers shall be put in possession on receipt by the Collector of the orders of the Board confirming the sale.

Consecutive lot No.	Name of district.	Pargana and mauza.	Number of mile on which land is situate.	Situated on which side of the Railway.	Approximate area of lot in bighas and in acres.		Land excluded from sale from each lot.		Commencement and termination of lot.	Boundary of lot.
					B. K. C.	A. R. P.	Reasons for exclusion.	A. R. P.		
1	Muzaffarpur.	Chupralodi *alias* Mariporo and Bhagwanpore, pargana Besara.	Mile 1 of Hajipur line.	West of the Railway.	0 12 5	0 0 32		.....	.....	*North*—Orchard of Tabarak Hussain. *South*—Public road. *East*—Railway fencing. *West*—Orchard of Kunja Sahu.
2	Ditto ...	Chupralodi *alias* Maripore.	Ditto ...	East of the Railway.	0 4 4	0 0 11·2	...	... ..	.....	*North*—Garden of Mr. Franjy. *South*—Public road. *East*—Garden of Mr. Franjy. *West*—Railway fencing.
3	Ditto ...	Ditto ...	Miles 1 and 2 of Hajipur line.	Ditto ...	0 4 0	0 0 11	.....	.....	..	*North*—Public road. *South*—Orchard of Safdar Hussain. *East*—Orchard of Abdul Jabar. *West*—Railway fencing.
4	Ditto ...	Ditto ...	Ditto ...	On both sides of the Railway.	2 18 2	0 2 20	This being a part of the District Board road.	0 2 20	.....	

The 17th April 1905.

KALI MOHAN SEN, for Collector.

Notice of Sale for Arrears of Revenue.

NOTICE is hereby given, under section 6, Act XI of 1859, read with Act VII (B.C.) of 1868 and Act II (B.C.) of 1871, that the undermentioned nosabad taluks within the Sadar khas mahal, in the district of Chittagong, will be put up to public and unreserved sale at the Collector's office of that district on the 14th day of July 1905 for arrears of rent and cesses remaining unpaid on the 25th day of May 1905:—

Mahal Nvabad.

Serial No.	No. of taluk.	Name of taluk with its situation.	Name of proprietor.	Sadar jama.		Arrear.	
				Rent.	Cesses.	Rent.	Cesses.
				Rs. A. P.	Rs. A. P.	Rs. A. P.	Rs. A. P.
1	883 / 20134	Mauza Bakalia, thana Town, taluk Ahamad Ali.	Mosharaf Ali and others	1,395 4 0	236 5 6	474 12 0	77 11 6
2	4787 / 23878	Mauza Juskhola, thana Fatickchari, taluk Earali Khan.	Obedar Rahaman Khan	2,556 4 0	176 12 0	1,421 9 9	129 4 9
3	4788 / 23879	Mauza Juskhola, thana Fatickchari, taluk Obedulla.	Hashmat Ali Khan Chowdhury and others.	1,149 0 0	88 1 0	430 14 0	18 3 6
4	4871 / 24021	Mauza Bhujpur, thana Fatickchari, taluk Earali Khan.	Nipruchaiman Raja	703 0 0	36 13 0	263 10 0	13 13 0
5	1 / 23939	Mauza Hapania, thana Fatickchari, taluk Faradjafar.	Ditto	894 10 6	67 9 6	181 0 0	25 9 0

Chittagong, the 10th June 1905.

J. J. BARNIVILLE, *for* Collector.

Notice of Sale for Arrears of Revenue.

NOTICE is hereby given, under section 6, Act XI of 1859, read with Act VII (B.C.) of 1868 and Act II (B.C.) of 1871 that the undermentioned noabad taluks within the Patia khas mahal, in the district of Chittagong, will be put up to public and unreserved sale at the Collector's office of that district on the 14th July 1905 for arrears and cesses remaining unpaid on the 25th May 1905 :—

No. of tenure.	Name of mauza, thana, and mahál.	Name of talukdar.	Sadar Jama.		Amount of arrears for which the tenure is to be sold.		
			Rent.	Cesses.	Rent.	Cesses.	Total.
			Rs.	Rs. A. P.	Rs. A.	Rs. A.	Rs. A.
1 6749 382	Thana Patia, mauza Dhopachari, mahal Noabad taluk Keramat Ali Kamalapru.	Chalafuru Choudhury, son of Bemang Kamalinga Choudhury of Bandarban.	844	42 9 6	316 8	16 0	332 8
14141 19387	Thana Patia, mauza Charichanasar, mahal Noabad taluk Ochman Sadagar and Eakup.	Raj Chandra Sen, son of Ramkishore Sen of Sanharah and Shariatulla Sadagar.	530	14 13 0	195 2	5 9	200 11

Chittagong, the 10th June 1905. J. J. BARNIVILLE, Covenanted Deputy Collector in charge.

Notice of Sale for Arrears of Revenue.

NOTICE is hereby given, under section 6, Act XI of 1859, Act VII (B.C.) of 1868 and Act II (B.C.) of 1871, that the undermentioned tenures in the Satkania khas mahal, in the district of Chittagong, will be put up to public and unreserved sale at the Collector's office of that district on the 13th day of July 1905 for arrears of rent and cesses remaining unpaid on the 25th May 1905 :—

No. of tenure.	Name of tenure with its situation.	Name of proprietor.	Annual Jama.		Amount of arrears for which the tenure is to be sold.		
			Rent.	Cesses.	Rent.	Cesses.	Total.
			Rs. A. P.	Rs. A. P.	Rs. A. P.	Rs. A. P.	Rs. A. P.
84 1824	Thana Satkania, at present Banskhali, mauza Nakora, mahal Noabad, hal taluk Rajkumar Roy.	Mahesh Chandra Bhattacharji ...	1,139 0 0	127 0 6	247 2 0	27 10 0	274 12 6
17 420	Thana Ditto, mauza Chambal, mahal Noabad, taluk Tajannissah.	Srimati Jahada Khatoon, herself and on behalf of minor sons, Abdul Karim, Abdool Rahim, Abdul Salim, Abdul Khalem and daughter, srimati Jannoot Khatoon.	1,554 4 0	161 9 6	732 14 0	60 9 6	793 7 6
5502 4900	Thana Satkania, mauza Satghar, mahal Noabad, taluk Fazar Ali Khan.	Salamat Ali Khan, Srimati Ashraf Bibi.	530 2 0	48 4 0	198 12 9	18 1 3	216 14 0

Chittagong, the 9th June 1905. F. P. DIXON, Collector.

Statement of the Affairs of the Bank of Bengal for the week ending 6th June 1905.

LIABILITIES.

	Rs.	A.	P.
Capital paid up	2,00,00,000	0	0
Reserve Fund	1,32,00,000	0	0
Public Deposits at Head Office ... ... Rs. 93,29,659 3 0			
Ditto ditto at Branches ,, 97,18,430 11 4	1,90,48,089	14	4
Other Deposits at Head Office and Branches ...	11,04,14,081	0	9
Bank Post Bills, &c.	6,06,353	2	4
Sundries	31,42,494	8	6
,, ...	16,64,11,018	9	11

ASSETS.

	Rs.	A.	P.
Government securities	1,36,74,618	1	11
Other authorised Investments	78,32,268	13	8
Loans on Government and other authorised securities	3,84,56,334	6	6
Accounts of credit on ditto ditto	2,14,36,264	2	11
Bills discounted and purchased	3,62,24,101	11	2
Balances with other Banks	20,35,400	9	9
Bullion	.....		
Dead Stock	18,55,251	8	3
Stamps	13,123	9	0
Sundries	12,56,786	3	7
	11,77,83,149	2	9
Cash & Currency Notes at Head Office* .. Rs. 2,79,19,046 10 3			
Cash & Currency Notes at Branches† ... ,, 2,07,08,822 12 11	4,86,27,869	7	2
Rupees ...	16,64,11,018	9	11

* Includes Sovs. & ½ Sovs., value Rs. 1,93,935 0 0
† Do. do. do. ,, 2,41,095 0 0
Rs. 4,35,030 0 0

By order of the Directors,
W. D. CRUICKSHANK,
Secretary and Treasurer.

BANK OF BENGAL,
Calcutta, 8th June 1905.

F. DICKINSON, Chief Accountant.
Rate for Demand Loans, 4 per cent.
Percentage 36·50.

MEMORANDUM.

LIABILITIES.

	Rs	
Government Balance at Head Office	11,50,730	Decrease.
Ditto at Branches ...	14,19,491	Increase.
Other Deposits	35,94,788	Decrease.
Post Bills	5,30,497	Do.

ASSETS.

	Rs.	
Bank's Investments	7,02,056	Increase.
Loans	9,86 691	Decrease.
Accounts of Credit	3,76,967	Increase.
Mercantile Bills	6,77,143	Do.
Cash at Head Office	53,25,627	Decrease.
Do. at Branches	8,49,465	Increase.

BANK OF BENGAL,
Calcutta, 7th June 1905.

Percentage 36·50.

(686—1)

Notice.

NOTICE is hereby given that all documents filed in the Land Registration cases enumerated in the list below will be disposed of according to departmental rules unless delivery of them is taken by the parties concerned within a month from the date hereof :—

Statement showing the Land Registration cases in which the parties have not taken back the documents filed therein.

Serial No.	Number of case and year.	Name of party.	Particulars of property in respect of which the documents were filed.			
			Division.	Block.	Holding.	Number of premises and the name of the street.
1	328 of 1898-89 ...	Rama Charan Samadar	South	XIV	274	22, Molonga Lane.
2	491 of ,, ...	Mr. Owen Arratoon	Do. ...	I	336	13, Gomes' Lane.
3	119 of 1899-90 ...	Abdul Samad	Do.	VIII	74	12, Monohipara Lane.
4	250 of 1891-92 ...	Monmohini Dasi	Do. ...	VII	333	28, Jaliapara Lane.
5	187 of ,, ...	Nistarini Debi and another ...	North	VII	262	21, Patuldanga Street.
6	598 of ,, ...	Radya Nath Shee	South ...	II	109	35, Doctor's Lane.
7	690 of ,, ...	Khettermoni Debi	North ...	XXIV	175	28, Ram Mohan Shaha's Lane.
8	747 of ,, ...	Shahebzada Muhammad Farrack Shah.	South ...	XXI	11 & 11½	5, Government Place.
9	I/234 of 1892-93 ...	Binodini Dasi	North ...	XIII	174	6, Kali Das Singh's Lane.
10	I/175 of ,, ...	Anath Nath Deb	South ...	XVI	235	9, Kapalitola Lane.
11	I/181 of ,, ...	Girish Chandra Das	Do. ...	XIV	184	1, Ramhari Mitter's Lane.
12	591 of ,, ...	Sattya Santi Banerjee	Do. ...	XIII	170	71 to 76, Bowbazar Street.
13	532 of ,, ...	Lala Nirmal Bokas Nandi ...	Do. ...	XVII	55	32, Free School Street.
14	661 o ,, ...	Elahijan Begum	North ...	IV	276	30, Lower Chitpur Road.
15	I/240 of ,, ...	.....	Do. ...	X	111	42, Ratoo Sircar's Lane.
16	I/50 of 1893-94 ...	Kiron Chandra Chatterjee ...	Do. ...	XV	110	17, Kristo Das Pal's Lane.
17	299 of ,, ...	Ariff Ismile Bham	Do. ...	X	337	18, Raj Mohun Bose's Lane.
18	117 of ,, ...	Sasi Bhusan Banerji	Do. ...	XI	38	30, Theatre Road.
19	I/288 of ,, ...	Gobindo Chandra Mandle ...	Do. ...	XIX	193	33, Ramtaran Bose's Lane.
20	I/259 of ,, ...	Ditto ...	Do. ...	XIX	196	29, Ditto.
21	I/104 of ,, ...	Debnarain Raha	Do. ...	X	57	14, Ratoo Sircar's Lane.
22	I/329 of ,, ...	Guru Das Kundu Chowdhury...	South ...	XIII	591	49, Chandni Chowk.
23	393 of 1894-95 ...	Dwarka Nath Banerjee	North ...	I	342	5, Akhil Mistri's Lane.
24	494 of 1895-96 ...	Sydani Aftaban Nessa Bibi ...	South ...	IV	83	13, 14 & 16, Godai Khansama's Lane.
25	223 of 1895-96 ...	Sarat Chandra Sen	North ...	XIV	319	23, Sukeas Street.
26	43 of ,, ...	Hem Chandra Bose *versus* Adharmoni Dasi.	Do. ...	XIII	97	12, Brindabon Mullick's Lane.
27	274 of ,, ...	Dwarka Nath Ganguly	Do. ...	XIV	420	6, Guru Prosad Chowdhuri's Lane.
28	366 of 1898-99 ...	R. Belchambers	Do. ...	XVII	111	43 & 43-1, Beniatolla Street.
29	411 of ,, ...	Monmohini Debi *versus* Batto Kristo Chakravarti.	Do. ...	X	209	16, Ramprosad Shaha's Lane.
30	556 of 1899-1900 ...	Jotindra Nath Pal *versus* Kesub Das Mohanto.	Do. ...	XVII	368	37, Burtollah Street.
1	633 of ,, ...	W. Leslie	South ...	VIII	18	60, Dharamtolah Street.
32	56 of 1900-1901 ...	Monuron Nessa Bibi	Do. ...	XV	70	7, Syed Ismail's Lane.
33	394 of 1898-99 ...	Khadra Nessa Bibi *versus* Hinnjan Bibi.	Do. ...	II	250	26, Taltola Bazar Street.
34	477 of 1900-01 ...	Atul Krishna Ghose *versus* Gobindo Chandra Bose.	North ...	XXIV	10	31, Nasur Mia's Lane.
35	442 of ,, ...	Syed Ekrast Ali *versus* Fatima Bibi.	South ...	IX	13	5, Wellesley 1st Lane.
36	439 of 1901-02 ...	Bhagwan Das Khettry	North ...	III	133	8, Phear's Lane.
37	46 of ,, ...	Mohendra Prasad Sandel *versus* Tarak Brahmo Lahiri.	Do.	XIV	171	36, Moddon Mitter's Lane.
38	249 of ,, ...	Abdul Wahid	South ...	XV	64	10, Keng's Lane.
39	178 of ,, ...	Mir Imam Ali	Do. ...	IX	90	31-1, Marsden Street.
40	19 of ,, ...	Jager Nath Byrack *versus* Kanai Lall Marowari.	North ...	XVIII	105	1, Sibtolla Street.
41	501 of 1900-01 ...	Chunder Coomar Kundu ...	Do. ...	XIV	23	65, Baranossi Ghose's Street.
42	62 of 1901-02 ...	Naymoon Nessa Bibi	South ...	XIV	216	115, Collinga Bazar Street.
43	362 of 1900-01 ...	Administrator-General, Bengal, as administrator to the estate of G. T. Ribeiro *versus* Bhagabat Rudra.	North ...	IV	44	274, Bowbazar Street.

Calcutta Collectorate, the 24th May 1905.

MAHANANDA GUPTA, Collector.

MILITARY ACCOUNTS DEPARTMENT.

Statement of Unclaimed Sums deposited with the Bengal Military Orphan Society in trust for Soldiers' Children, exclusive of those of minors who have not attained the age of 21.

Date of Deposit.	Name and Rank of Father.	Corps.	Names of Children.	Amount. Rs.	A.	P.
Prior to 1842	Collins, ——, Sergeant ...	.....	Two children ...	157	14	1
,,	Lee, E., Corporal	.....	Two children ...	111	9	6
,,	Smith, Henry, Sergeant ..	.. ...	Elizabeth	828	0	0
,,	Smith, D., Sergeant-Major ...	.. ...	Margaret	78	6	5
,,	Story, ——, Sergeant ...	.....	Thomas	117	5	4
,,	MacConnell, Sergeant ...	.....	John	77	15	3
,,	Rutherford, Sergeant ...	.....	Margaret	138	10	8
,,	Hewetson, William, Gunner ...	.....	John	47	5	7
,,	Taylor, John, Private ...	.....	John	214	11	11
,,	Conroy, Peter, Corporal ...	.....	Thomas	274	14	6
,,	McCullum, ——, Conductor ...	.....	John	354	6	10
,,	Gordon, James	59th Foot	James	589	2	2
,,	Casey, Jeremiah	87th Foot	Daniel	109	12	4
,,	Corbolly, Thomas, Private ...	59th Foot	Samuel	62	12	3
,,	Cassidy, ——, Corporal ..	.....	John	61	3	9
,,	Hyde, Henry, Conductor ...	.....	Thomas	187	1	10
,,	Hodgkinson, E., Troop Sergeant-Major.	11th Dragoons ...	William	64	8	0
,,	Anderson, William, Corporal ..	H. C. 1st Bn. Regt. ...	Mary Anne Margaret ...	124	11	6
,,	White, W., Private ...	3rd Buffs	George and Mary Anne	13	13	9
,,	Minogue, T., Private ..	3rd Buffs	Thomas	23	11	0
,,	Tailor, John, Bombardier ...	.....	Elizabeth	43	0	0
,,	Neal, James, Private ...	59th Foot	James	43	0	0
,,	Sherrock, J., Corporal ...	.....	Joseph	160	0	0
,,	Moore, Bombardier ..	.....	Dorothy	5	9	5
,,	Lawson, Henry, Laboratory Sergeant.	.....	George	11	8	2
,,	Creighton, James, Corporal ...	13th L. Infy. ...	Mary Ann	16	13	0
,,	McCoy, ——, Sub-Conductor ...	.....	John and George ...	958	3	2
,,	Long, R., Sergeant ...	Allahabad Magazine Establishment.	Ann and Robert D. ...	187	3	9
,,	Baker, H., Gunner ...	4th Co., 3rd Bn. Arty. ...	James	32	1	4
,,	Hills, ——, Gunner ...	1st Co., 3rd Bn. Arty. ...	Sophia	30	1	1
,,	Burns, James, Gunner ...	Artillery	Hannah	10	5	9
,,	McKenney, R., Bombardier ...	1st Co., 4th Bn. Arty. ...	Ann Eliza	134	6	5
,,	Smith, J., Gunner ...	1st Co., 2nd Bn. Arty. ...	Margaret	6	6	5
,,	Byrne, F., Hospital Sergeant ...	2nd Bn., Arty. ...	Charles	123	13	4
,,	Flynn, J., Gunner ...	3rd Troop, 1st Bde., H. Arty.	Elizabeth	6	1	4
,,	Fagan, J., Gunner ...	1st Co., 3rd Bn. Arty. ...	Mary and James ...	11	12	9
,,	Johnson, C., Gunner ...	1st Co., 5th Bn. Arty. ...	William	3	0	6
,,	Twomey, M., Gunner ...	4th Co., 3rd Bn. Arty. ...	Michael, William, and Margaret.	21	2	11
,,	Ahern, William, Gunner ...	4th Co., 2nd Bn. Arty. ...	John	65	11	9
,,	McCormick, J., Gunner ...	4th Co., 2nd Bn. Arty. ...	Bernard	116	10	9
,,	Gavin, J., Gunner ...	2nd Co., 3rd Bn. Arty. ...	Thomas and James ...	189	3	6
,,	Bryan, D. Sergeant ...	.....	Mortimer	12	10	11
,,	Reid, ——, Sergeant ...	Sappers and Miners ...	Eleanor and Eunice ...	68	6	5
,,	South, John, Sergeant ...	.....	Elizabeth and Martha ...	310	0	0
,,	Cunningham, Mathew, Private	44th Foot	Michael	37	14	6
,,	Blyth, John, Conductor ...	.....	Children (names not recorded).	12	12	3
,,	Smith, T., Sergeant ...	.....	Esther and Amelia ...	23	15	0
,,	Pierce, Qr.-Mr. Sergeant ...	20th N. I.	Thomas	711	15	2
,,	Driver, J., Sergeant-Major ...	.....	Robert Charles and John.	141	7	1
,,	Davis, D., Farrier Sergeant ...	4th Troop, 1st Bde., H. Arty.	Thomas	23	15	2
,,	Canty, John, Bombardier ...	3rd Co., 4th Bn. Arty. ...	John (died 11th May 1842).	272	2	8
June 29, 1853	(Not recorded)	.....	Bryon, Margaret, and William.	53	8	3
,, 29, 1849	(Not recorded)	.....	Daly, Robert ...	23	9	1
Mar. 24, 1843	Nowlon, L., Farrier Sergeant ...	4th Troop, 2nd B. H. A.	Ellen	112	9	0
Apl. 3, 1843	Farrel, James, Gunner ...	2nd Co., 5th Bn. Arty. ...	Charlotte	4	2	8
,, 3, 1843	Roach, Edward, Private ...	1st En. Lt. Infy. ...	David and Austol ...	7	13	3
Mar. 9, 1843	Shieham, B., Gunner ...	3rd Co., 3rd Bn. Arty. ...	John and Patrick ...	2	1	8
June 21, 1844	Evans, George, Sergeant ...	1st Co., 2nd Bn. Arty. ...	Mary Ann and Catherine.	19	14	9
Sept. 19, 1844	Andrews, ——, Private ...	44th Foot	George	200	0	0
Oct. 30, 1837	Ward, J., Gunner ...	O. Batty., 3rd Bde., R. A.	Julia	277	11	11
Dec. 31, 1837	Bunn, T., Gunner	G. Batty, B. Bde., R. H. A.	William Thomas ...	63	9	8
			James John ...	63	9	8
Mar. 29, 1838	Oxford, W., Private ...	2nd Royal Lanc. Regt.	A. L. and A. ...	20	6	5
Nov. 16, 1844	Gale, ——, Private ...	10th Foot	John Thomas ...	28	12	0
,, 30, 1844	Sullivan, John, Bombardier ...	1st Co., 2nd Bn. Arty. ...	John	130	0	0
Jan. 6, 1845	Monaghan, Michael, Sergeant ...	1st Co., 2nd Bn. Arty. ...	James	156	12	5

Date of Deposit.	Name and Rank of Father.	Corps.	Names of Children.	Amount.
				Rs. A. P.
Jan. 15, 1845	Godfrey, ——, Sergeant-Major...	.....	Harriett M. and James...	31 14 1
Feb. 14, 1845	Fry, ——, Bugle-Major ...	6th Bn. of Arty. ...	James	12 6 9
„ 3, 1842	Wilson	.. ...	Sophia, Thomas, and Elizabeth.	204 7 3
„ .. 184?	McCarthy, Qr.-Mr. Sergeant ...	.....	John	61 2 3
„ 14, 1845	Hannon, J., Drummer ...	68th Regt, N. Infy. ..	Mary	28 8 2
July 7, 1845	Hay, A., Sergeant-Major ...	.....	Thomas	101 5 4
„ 9, 1845	Meaney, John, Sergeant-Major	2nd Bde., H. Arty.	Henry and James ...	292 15 8
„ 9, 1845	Murphy, Thomas, Bombardier	2nd Troop, 3rd Bde., H. Arty.	Ellen	77 4 11
„ 9, 1845	Fate, William, Staff Sergeant ...	4th Co., 15th Bn. of Arty.	Catherine Ann... ...	167 15 5
„ 9, 1845	Paley, Owen, Gunner ...	3rd Co., 5th Bn. of Arty.	Owen	7 1 7
Sept. 1, 1845	Ryan, ——, Sergeant ...	.....	Julia B. and George J.	120 13 0
Aug. 8, 1846	McEnerney, Thomas, Sub-Conductor.	.....	Hannah	152 0 9
.....	Glassean, John, Corporal ...	.....	Ellen Sarah ...	66 10 2
.....	Ridley, Henry, Gunner ...	.....	Henry	34 9 3
Oct. 16, 1848	Lewis, Thomas, Gunner ...	Arty.	Thomas	20 5 3
July 6, 1847	Dobbins, Francis, Gunner ...	.....	Martha	33 3 6
„ 19, 184	Lunn, Adam, Farrier ...	.....	Adam T. and John ...	79 14 0
„ 19, 1847	Clarke, William, Bombardier ...	1st Troop, 3rd Bde., H. Arty	Not recorded ...	104 10 3
„ 19, 1847	Prince, W., Sergeant ...	1st Troop, 1st Bde, H. Arty.	Ditto	125 15 10
Jan. 11, 184?	Byrnes, ——, Corporal ...	.....	Maria	59 0 0
July 6, 1848	Braithwaite, W., Staff Sergeant	.....	C. William and William H.	148 3 5
Oct. 16, 1848	Butcher, H., Sergeant-Major ...	Sirmoor Bn. ...	Johannah, Frederick and David Edwin ...	99 6 1
May 9, 1849	Sheehan, D., Private ...	2nd En. Regt. ...	James	36 5 6
June 2, 184?	Moore, Benjamin, Private ...	1st En. B. F. ...	Sarah C.	9 8 4
„ 2, 1849	Crowley, Charles, Private ...	1st En. B. F. ...	John	7 6 1
Oct. 12, 1849	Deare, W , Conductor ...	.....	Emeline	50 0 0
Nov. 21, 1849	Moget, ——, Sergeant-Major ...	.....	George	69 14 4
Feb. 18, 1850	Boote, Daniel, Gunner ...	1st Co., 4th Bn. of Arty.	James and another ...	26 3 5
June 29, 1850	Uniack, Patrick, Sergeant ...	1st Co., 3rd Bn. of Arty.	John and another ...	29 15 0
Aug. 19, 1850	Sheehan, P , Gunner ...	Arty.	Patrick	23 5 6
Oct. 29, 1850	Lees, James, Corporal ...	2nd En. Regt. ...	Elizabeth	25 14 6
Nov. 4, 1852	Hodgins, Adam, Gunner ...	2nd Co., 5th Bn. of Arty.	William	9 11 11
Feb. 1, 1853	Edwards, Michael, Sergeant ...	2nd Co., 5th Bn. of Arty.	Jane and Bridget ...	36 5 9
Apl. 21, 1853	Staples, Edward, Sergeant ...	Sappers and Miners ...	E. W. H.	97 2 6
Sept. 13, 1853	Brown, Michael, Sergeant ...	Arracan Bn. ...	John	49 10 3
Jan. 24, 1854	Galway, Robert, Bombardier .	1st Co., 3rd Bn. of Arty.	William	206 1 2
„ 18, 1855	Munrowd, George, Sub-Conductor.	Ordnance Dept. ...	Georgiana	61 10 3
Sept. 24, 1855	Franks, G., Bazar Sergeant ...	.....	Mary Harriot ...	283 1 11
Oct. 15, 1857	Earle, Edward, Sergeant ...	Calcutta Town Guard ...	William Edward ...	209 14 0
Dec. 4, 1860	MacDonnel, John, Private ...	97th Foot	Charles	25 15 6
June ... 1862	Keddie, J., Private ...	2nd Kn. B. F. ...	Jane and James ...	86 0 0
July 22, 1863	Lawton, William, Color-Sergeant	24th Foot	William and Joseph ...	162 14 2
Jan. 25, 1864	Jones, John, Gunner ...	G. Battery, 22nd Bde., Royal Arty.	Henrietta Dalzell ...	39 5 10
Mar. 10, 1864	Anderson, William, Gunner ...	5th Bn., 25th Bde., Royal Arty.	Duncan	35 4 11
May 19, 1864				
July 18, 1865	Rowland, J., Private ...	2nd Dragoon Guards ...	Sophia M. and Elizabeth Ann.	8 0 0
June 25, 1866	Mead, William, Bombardier .	4-25th Royal Arty. ...	Mary and Thomas ...	4 0 0
Oct 9, 1871	York, R., Sergeant ...	Arty.	Henry J.	31 1 4
May 8, 1884	Claydon, Daniel, Color-Sergeant	2nd Lanc. Fus. ...	Thomas Patrick ...	60 0 0
July 6, 1887 to June 2, 1888 and Sept. 7, 1888	Simons, J., Lance-Corporal ...	2nd Bn., The Queen's Royal West Surrey Regt.	Annie Isabella and John Thomas.	353 14 0
Apl. 11, 1889	Hyland, M., Drummer ...	2nd Bn., The Queen's Royal West Surrey Regt.	Patrick, Emily, Matilda, and Rosanna.	558 9 3

Application for payment of the deposits should be made to the Pay Examiner, Bengal Command, Calcutta.

JOHN C. C. PERKINS, *Captain*,

Pay Examiner, Eastern Command, and ex-officio *Secretary, Military Orphan Schools.*

PAY EXAMINER'S OFFICE, EASTERN COMMAND;
Calcutta, the 9th June 1905.

In the Court of the Subordinate Judge of Rajshahi.

EXECUTION CASE No. 53 OF 1905 (MORTGAGE).

Chandra Nath Mozumder, decree-holder, *versus* Shara Khatoon and others, judgment-debtors.

NOTICE is hereby given that the undermentioned property of the judgment-debtors will be sold at a public sale in the Court premises by the Nazir of the District Judge of Rajshahi on the 15th June 1905 at 12 A.M. for the realization of Rs. 6,878-7 in execution of the above decree:—

Sixteen annas share of Dehi Khelabarea, pargana Bhaturesh, tappa Chapailesh, station and sub-registry Nator, bearing tauzi No. 432 of the Rajshahi Collectorate. Revenue payable for the mahal Rs. 2,944-6 (including police tax).

RADHA NATH SEN, Sub-Judge.

Boalia, the 1st June 1905. (684—1)

Notification.

TO be peremptorily sold, pursuant to a decree and an order of the High Court of Judicature at Fort William in Bengal, in its Ordinary Original Civil Jurisdiction, in suit No. 33 of 1904 (wherein Gusrati Dassee is the plaintiff and Bepin Behary Newgie and another are defendants), and dated, respectively, the 28th day of April 1904 and 2nd day of March 1905, by the Registrar of the said Court in his sale-room at 12 o'clock, noon, on Saturday, the 8th day of July 1905, the following property:—

Lot 1.—All that two-storied brick-built messuage, tenement or dwelling-house, together with the piece or parcel of land or ground thereunto belonging on part whereof the same is erected and built, containing by estimation 3 cottahs, be the same a little more or less, situate, lying at, and being No. 95 Shambazar Street in Sutanuty in Calcutta, and bounded on the north by No 96 Shambazar Street, belonging to the said Nundo Gopal Newgie, deceased, on the east by a blind lane, on the south by Shambazar Street, and on the west by a blind lane.

The abstract of title and conditions of sale may be seen at the Registrar's office in the High Court and also at the office of Babu Abinash Chander Dey at No. 7 Old Post Office Street, Calcutta, on any day before the sale and will be produced at the sale.

W. R. FINK, Registrar.

Abinash Chunder Dey, plaintiff's Attorney.

High Court, Original Side, the 30th day of May 1905.

(683—1—416)

Holta Tea Company, Limited.

NOTICE is hereby given that at an Extraordinary General Meeting of the Shareholders of the Holta Tea Company, Limited, held at the Registered Office of the Company, No. 20 Strand Road, Calcutta, on the twenty-ninth day of May 1905, the following extraordinary resolutions were passed:—

1. That it has been proved to the satisfaction of the meeting that the Company cannot, by reason of its liabilities and inability to arrange finance, continue its business, and that it is advisable to wind up the same and accordingly that the Company be wound up voluntarily.

2. That Mr. G. Kingsley and Mr. S. Jameson be and hereby are appointed to be Liquidators of the Holta Tea Company, Limited, with joint and several powers for the purposes of the winding up of such Company.

SHAW, WALLACE & Co.,
Agents and Secretaries.

Calcutta, the 29th May 1905. (650—2—414)

Lost.

THE Government Promissory Note No 109983 of the 3½ per cent. loan of 1865 for Rs. 5,000, originally standing in the name of Rajoballa Dabee, and last endorsed to Hrishikesh Chatterjee, the proprietor, by whom it was never endorsed to any other person, having been lost, notice is hereby given that payment of the above note and the interest thereupon have been stopped at the Public Debt Office, Bank of Bengal, Calcutta, and that application is about to be made for the issue of duplicate in favour of the proprietor. The public are cautioned against purchasing or otherwise dealing with the abovementioned security.

Name of the advertiser—HRISHIKESH CHATTERJI.
Residence—Kanchrapara, district Nuddia.

(649—3—396)

Lost or Stolen.

THE Government Promissory Notes Nos. 026356, 026357 and 026358 of the 3 per cent. loan of 1896-97 for Rs. 100 each, originally standing in the name of Shamapodo Sreemany and last endorsed to Nalin Chunder Mookerjee (since deceased), the proprietor, by whom they were never endorsed to any other person, having been lost or stolen, notice is hereby given that payment of the above notes and the interest thereupon have been stopped at the Public Debt Office, Bank of Bengal, Calcutta, and that application is about to be made for the issue of duplicates in favour of the administrator. The public are cautioned against purchasing or otherwise dealing with the above-mentioned securities.

T. H. WILSON & Co.,
Attorneys for Babu Bhola Nath Roy, Administrator, Estate, Nalin Chunder Mookerjee, deceased

6, Old Post Office Street, Calcutta. (659—3—417)

NOTICE TO CREDITORS.

In the Goods of Elizabeth Steer Onsow deceased.

NOTICE is hereby given that Letters of Administration with copy Will and two codicils annexed to the property and credits of the deceased above named having, on the 4th day of May 1905, been granted to Frederick Henry Eggar, all creditors and other persons having any claim against the estate of the abovenamed deceased are hereby required to send in writing the particulars thereof to the undersigned on or before the 1st day of July 1905 after which date the assets of the estate of the said deceased will be distributed by Frederick Henry Eggar, the Administrator, amongst the parties entitled thereto having regard to the claims of which he has then had notice. And notice is hereby further given that the said Frederick Henry Eggar will not be liable for the assets or any part thereof so distributed to any person of whose claim he shall not have had notice at the time of such distribution such notice to be sent to the undersigned.

Dated this 29th day of May 1905.

THOS. H. WESTMACOTT,
30-2 Dalhousie Square,
Attorney for Frederick Henry Eggar, Administrator to the Estate of the deceased.

(610—3—395)

Wanted

AN Overseer for the Sadar subdivision of the District Board, Khulna, on Rs. 60—4—80, *plus* travelling allowance, Rs. 37-8 per month.

A plucked B.E. strong in estimating and road projects is required. Apply on or before the 25th June 1905 to

H. D. CHATTERJEE, District Engineer.

Khulna, the 1st June 1905. (662—3)

Wanted

TWO B.Sc.'s, one for the post of the Science Teacher of the Rangpur Zillah School and the other for the post of a Teacher of Mathematics and Science in the Ranchi Industrial School, each on a salary of Rs. 50 (fifty rupees) a month, outside the list of the Subordinate Educational Service.

Applications will be received up to the 24th June 1905.

HARI DAS BANERJEE, Personal Asst.,
for Director of Public Instruction, Bengal.

Calcutta, the 3rd June 1905.

Wanted

A CIVIL VETERINARY ASSISTANT for the Angul District and three Wards Tributary States. Salary Rs. 50, personal allowance Rs. 10, and fixed travelling allowance Rs. 15 per month. Applications with copies of testimonials to be submitted before the 15th June 1905.

Applicants to state age.

R. MCLEOD SMITH, Deputy Commissioner.

Angul, Orissa, the 16th May 1905.

Notice.

WANTED a Head Clerk for the Serampore Sub-divisional Office on a salary of Rs. 50—2—70 from 1st July 1905. Applications will be received by the undersigned up to 15th June 1905.

Thorough experience in Revenue and Criminal work is necessary.

S. K. GHOSH, *for* Collector.

Hooghly, the 1st June 1905. (664—3)

Notice.

WANTED a Lecturer on Annuities and Insurance for the Evening classes in connection with Commercial Education in the Presidency College on an allowance of Rs. 1,500 a year.

Preference will be given to a person who is employed in an Insurance Office.

Applications with copies of testimonials will be received by the undersigned on or before the 20th June 1905.

P. K. RAY,
Offg. Principal, Presidency College.

Presidency College, Calcutta, the 16th May 1905.

Wanted

A HEAD CLERK AND ACCOUNTANT for the District Engineer's Office, Dinajpur, on a salary of Rs. 60. None need apply who is not qualified under rules and not experienced in the District Engineer's office works.

Applications with copies of certificates and mention of age will be received by the undersigned up to 18th June 1905. The candidate selected shall have to deposit Rs. 330 in Savings Bank pass-book as security deposit and shall have to join at once.

A. K. MUKHERJEE, District Engineer.

District Engineer's Office, Dinajpur, the 7th June 1905. (687—1)

Wanted

A CLERK for the Certificate Office, Howrah, on Rs. 25 per month. An applicant with experience in the work of the Certificate Department will be preferred. The applications will be received by the undersigned up to 20th instant.

H. T. S. FORREST, Collector.

Howrah Collectorate, the 7th June 1905. (689—1)

Wanted

A HEAD MASTER AND A THIRD MASTER for the Barh Bayley H. E. School on a monthly salary of Rs. 60 and Rs. 30 respectively. The selected candidates will have to stick to the posts for one year at least. Applications to be received by the undersigned up to the 5th of July 1905.

JYOTISH CHANDRA SEN,
Secretary, Barh H. E. School.

Patna, P. O. Barh, the 10th June 1905. (692—3)

UNDER Rs. 1,000.

Notification.

TO be peremptorily sold, pursuant to the decree and order of the Calcutta High Court in suit No. 661 of 1902 (Kali Prosonno Ruckhit *versus* Tulsi Churn Sen), and dated, respectively, the 6th day of April 1903 and 20th day of May 1904, in his sale-room in the Court-house on Saturday, the 17th day of June 1905, at 12 o'clock noon, the undermentioned property:—

Lot I.—All that undivided half part or share of and in all that partly two-storied and partly one-storied brick-built house, together with the land, containing by measurement 1 cottah and 12 chitaks, being premises No. 7-1 Doctor's Lane, formerly called Harripara Lane, Taltollah, in the town of Calcutta, being portion of holding No. 306, Block No. II, and paying to the Government an annual revenue of annas 11 and pies 9 for the entire holding, and bounded on the north by the premises No. 7 Doctor's Lane, the dwelling-house of Harrish Chunder Dey, on the south by an open public drain, on the east by the premises No. 7-2 Doctor's Lane, formerly the dwelling-house of Mahomed Bux, but now owned by Harrish Chunder Dey, and on the west by new road connecting Doctor's Lane with Serang's Lane.

The abstract of title and conditions of sale and the plan of the premises No. 7-1 Doctor's Lane may be seen at the Registrar's Office in the Court-house, or at No. 4 Hastings Street, the office of the Plaintiff's Attorney, Kumar Sailendra Krishna Deb, on any day before the sale and will be produced at the sale.

W. R. FINK, Registrar.

Kumar Sailendra Krishna Deb, Plaintiff's Attorney.

High Court, Original Side, the 4th day of May 1905.

(685—1—418)

Notice.

A CERTIFICATE under section 36 of Act II of 1874 to the estate of Frederick Hind, late of Dhubri, a Chief Engineer, in the employ of the India General Navigation and Railway Company, Limited, who died intestate on 8th December 1904 at Dhubri in Assam, has been granted to Charles Agate of No. 4 Fairlie Place, Calcutta, Acting Superintending Engineer, in the employ of the India General Navigation and Railway Company, Limited, on behalf of Mrs. Jessie Hind, widow of the deceased, residing in England, to enable him to administer the estate. All persons being indebted to or having claims against the estate should communicate with the said Charles Agate.

HENRY T. HYDE,
Administrator-General of Bengal.

3 Council House Street, Calcutta, the 13th June 1905. (696—1)

INSOLVENT NOTICE.

In the matter of ROBERT SIMPSON, an insolvent.

Notice that an application for an *ad-interim* protection order has been this day made by the said insolvent, and that such application will be heard and disposed of by the Acting Commissioner of the Insolvent Court on Monday, the 19th day of June instant, at the hour of half-past ten o'clock in the forenoon.

☞ Any creditor of the said insolvent desirous of opposing such application must appear before the said Court at the time and place aforesaid.

P. N. Sen, Attorney. (698—1)

In the Court of the 2nd Munsif of Sealdah.

INSOLVENCY CASE No. 15 OF 1905.

KEDAR NATH RAI, son of late Ramtaran Rai, of Intally, thana Intally, district 24-Parganas, is declared an insolvent by this Court on the 30th September 1904.

KUNJO BEHARY GUPTA, Munsif.

Sealdah, the 6th June 1905. (688—1—4/5)

NOTICE.

In the Court of the District Judge of Nadia.

CASE No. 7 OF 1905 (INSOLVENCY).

KHOKAI MALLIK SHEIK, of Kalaidanga Chaugacha, thana Meherpur, was declared an insolvent by this Court on 19th May 1905.

A. CH. CHATTERJI, for District Judge.

The 5th June 1905. (690—1)

In the Court of the District Judge of Bhagalpur.

INSOLVENCY CASE No. 1 OF 1905.

Dwarka Ram, son of Bandi Ram, resident of mauza Bhojna, pargana Farkia, district Monghyr, petitioner.

NOTICE is hereby given that the abovenamed petitioner Dwarka Ram has been declared an insolvent by this Court on the 31st May 1905, and the Nazir of this Court has been appointed Receiver in the case.

L. C. ADAMI, Offg. District Judge.

Bhagalpur, the 10th June 1905. (691—1)

NOTICE.

In the Court of the District Judge of Nadia.

CASE No. 9 OF 1905 (INSOLVENCY).

GAJU SHEIKH of Gosari, thana Kotwali, was declared an insolvent by this Court on 2nd June 1905.

A. CH. CHATTERJI, *for* District Judge.

Krishnagar, the 9th June 1905. (695—1)

NOTICE.

In the Court of the District Judge of Nadia.

CASE No. 8 OF 1905 (INSOLVENCY).

RAJU SHEIKH of Gosari, thana Kotwali, was declared an insolvent by this Court on 2nd June 1905.

A. CH. CHATTERJI, *for* District Judge.

Krishnagar, the 9th June 1905. (694—1)

CALCUTTA POST OFFICE NOTICE.

Mails for—	Date and hour of closing at the General Post Office, Calcutta.		Route by which despatched.
	1905.	P.M.	
United Kingdom, Aden, Egypt, Europe, America, West Africa *vid* United Kingdom and East Africa *vid* Aden (and also South Africa, if superscribed on the cover *vid* United Kingdom or Aden).	June 15	At 6 30	For P. & O. steamer from Bombay.
Parcels and money-orders for the United Kingdom and other Foreign places.	,, 14	Parcels, 5 P.M.; M.-O., 4 P.M.	Ditto ditto.
*Australasian Colonies ...	,, 19	At 7-30	*Vid* Tuticorin and Colombo.*
† Straits Settlements (also China and Japan, if the Steamer's name is superscribed on the cover).	,, 16	,, 8-30	Per steamer *Lightning*.
Burma	,, 15	,, 7-30	Per B. I. S. N. Co.'s steamer.
Burma, Penang and Singapore.	,, 17	,, 7-30	
Akyab, Kyaukpyu and Sandoway.	,, 16	,, 7-30	
Burma, Tavoy and Mergui ...	,, 19	,, 7-30	
Port Blair	,, 16	,, 7-30	Per steamer *Maharaja*.
South Africa (Letters) ...	,, 20	,, 7-30	Per steamer *Umkuri* from Colombo.
Ditto (Parcels) ...	,, 20	,, 5	
Ditto (Letters) Supplemental.	,, 21	,, 7-30	
Ditto (Parcels) Supplemental.	,, 21	,, 5	

* Although the date entered in column 2 is, as far as can be calculated, the latest safe date of posting for the next Mail steamer, full allowance being made for the steamer being in advance of her published timing, Mails for the places mentioned in column 1 are despatched daily to Tuticorin, so that they may proceed by any steamer from Colombo that has been unusually accelerated or retarded, or by any special opportunity that may be afforded by a steamer not belonging to one of the regular lines.

† Correspondence for China and Japan is despatched daily to Tuticorin, so that it may proceed by the first steamer from Colombo.

1. The letter-box for Inland articles will be cleared for the forenoon Mails at the following hours:—
   For Goalundo, Arakan and Chittagong, at 5-45 A.M.
   For Midnapore and Orissa districts, at 9 A.M.
   For the Eastern districts, as far as Dacca and Mymensingh, at 6-15 A.M.
   For Khulna and Jessore districts, at 7 A.M.
   For Bombay, Central Provinces and Midnapore *vid* Bengal-Nagpur Railway, at 11-15 A.M., and with a late fee of ½ anna up to 11-40 A.M.

2. The letter-box will be cleared for the evening Mails at the following hours, viz.—
   For the East Indian Railway Loop Mail, at 2-30 P.M., and with a late fee of ½ anna up to 2-55 P.M.
   For the Northern Bengal, Darjeeling and Assam Mails, at 3-25 P.M., and with a late fee of ½ anna up to 3-50 P.M.
   For the Bombay Mail *vid* Jubbulpore, at 6 P.M., and with a late fee of ½ anna up to 6-30 P.M.
   For the Punjab Mail, at 7-30 P.M.
   For Midnapore, Orissa, Madras Presidency and Ceylon, at 7-30 P.M.
   For the Khulna Mail, at 7-30 P.M.
   For the Eastern Bengal Mail, Darjeeling, and places on the Darjeeling-Himalayan Railway, at 7-30 P.M.
   } and with a late fee of ½ anna up to 8 P.M. and with a late fee of 1 anna up to 8-45 P.M.

3. Late registered letters will be received between the following hours:—
   For the Bombay Mail *vid* Jubbulpore, from 5 P.M. to 6-15 P.M.
   For the Punjab Mail, from 6 P.M. to 7 P.M.
   For the Eastern Bengal Mail, from 6 P.M. to 7 P.M.
   For the Khulna Mail, from 6 P.M. to 7 P.M.
   For Midnapore, Orissa, Madras Presidency and Ceylon, from 6 P.M. to 7 P.M.

NOTE.—The late fee on each registered letter will be 2 annas, which must be prepaid in stamps on the letter.

4. Articles for Burma and for Port Blair by sea are received without late fee up to 7-30 P.M., and with a late fee of ½ anna up to 8 P.M.

5. On the latest safe day of despatch of Mails for the Australasian Colonies, or any other Foreign Countries, *vid* Madras or Tuticorin, the letter-box for Foreign articles will be cleared for the last time at 7-30 P.M., and late letters and papers fully prepaid will be received up to 8-45 P.M.

6. On the day of despatch of the Mail for Europe (Thursday) the letter-box for Foreign articles will be cleared for the last time for articles, without the late fee, at 6-30 P.M., and late letters and papers fully prepaid will be received up to 6-45 P.M. Late registered articles will be received from 5 to 6 P.M. On the day of despatch of any Foreign Mail by sea, the letter-box

will be cleared for the last time, without the late fee, up to 8-30 P.M., and late letters and papers up to 9 P.M. The late fee for Foreign articles is 4 annas, which must be prepaid in stamps affixed to the articles.

CALCUTTA G. P. O., *The 12th June 1905.* } JOHN OWENS, *Presidency Postmaster.*

Nadia Rivers.

Report showing the least depths of water for the week ending Friday, the 9th June 1905.

Name of River.	Reach of River.	Least depth of water sounding.	Remarks.
		Ft. in.	
Bhagirathi.	Entrance from Ganges ...	4 9	
	Thence to Geriah	5 3	Momintola.
	From Geriah to Jangipur ...	4 9	Kanupur.
	,, Jangipur to Berhampore	5 0	Amaniganj.
	,, Berhampore to Katwa	3 0	Bhootkhat.
	,, Katwa to Nadia ...	4 0	Katwa.
Bhairab-Jalangi.	Entrance from Ganges ...	6 6	
	Thence to Akriganj	5 9	Akhriganj.
	Akriganj to junction of the Bhairab and Jalangi ...	4 3	Deboipur.
	Thence to Patkabari	6 6	Lalnagar.
	Patkabari to Nadia	4 3	Jitpur.
Mathabhanga.	Entrance from Ganges ...	3 0	
	Thence to Dewanganj	1 0	Dewanganj.
	From Dewanganj to Shikarpur	1 0	Kurmipara.
	,, Shikarpur to Boalia ...	2 6	Kadipur.
	,, Boalia to Chuadanga ...	2 6	Muhammadpur.
	,, Chuadanga to Kissenganj and Hanskhali	6 3	Shibnibash.

Gauge Readings.

	Locality.	Date.	Hour.	Height above zero.	Height above mean sea-level.	Remarks.
				Ft.	Ft.	
Ganges ...	Sahibganj ...	9-6-1905	A.M. 6	3·33	71·83	Rise.
	Rampur Boalia	10-6-1905	Noon	46·90	46·90	Do.
	Entrance of Bhagirathi Geriah	11-6-1905	A.M. 7	9·40	54·40	Do.
	Entrance of Bhairab-Jalangi Akriganj ...	11-6-1905	7	4·40	43·36	Do.
	Entrance of Mathabhanga ...	...	...	...	...	...
Bhagirathi.	Jangipur ...	11-6-1905	A.M. 8	25·60	52·10	Rise.
	Berhampore ...	12-6-1905	7	7·12	40·87	Do.
	Katwa ...	9-6-1905	P.M. 5	8·35	23·51	Fall.
Jalangi ...	Krishnagar ...	9-6-1905	...	4·00	...	...
	Sarupganj ...	10-6-1905	Noon 12	7·30	7·30	Fall.
Mathabhanga.	Hanskhali ...	10-6-1905	P.M. 4	6·00	[16·85	Do.

A. K. BANERJI, Accountant,
for *Exe. Engr., Nadia Rivers Division*

Berhampore, the 12th June 1905.

THE INDIAN LAW REPORTS.

Published in FOUR SERIES, viz.:

CALCUTTA, MADRAS, BOMBAY AND ALLAHABAD.

THE Indian Law Reports, published under the authority of the Governor General in Council, are printed in monthly Parts, which are issued, as soon as possible after the first of each month, at Calcutta, Madras, Bombay and Allahabad, respectively.

The Reports comprise four Series—one for the Calcutta High Court, a second for the Madras High Court, a third for the Bombay High Court, and a fourth for the Allahabad High Court.

The cases heard by the Privy Council on appeal from each High Court are reported in the Series for that High Court. Cases heard by the Privy Council on appeal from Provinces in India not subject to any High Court are reported in the Calcutta Series.

The Calcutta Series is distributed by the Bengal Secretariat Book Depôt: and the Madras, Bombay and Allahabad Series are distributed direct from Madras, Bombay and Allahabad, respectively.

Persons desiring to subscribe for or purchase the Reports should apply to—

the Officer in charge, Bengal Secretariat Book Depôt, Calcutta,
or
the Superintendent, Government Press, Madras, or
the Superintendent, Government Central Press, Bombay, or
the Curator of Government Books, United Provinces of Agra and Oudh, Allahabad.

PRICES.

THE terms of subscription, and the terms on which current issues and back numbers are sold, are as follows:—

	Without postage.	With Indian postage.	With Foreign postage.
	Rs. A. P.	Rs. A. P.	Rs. A. P.
COMPLETE SERIES—			
Current issues, per annum	.....	22 8 0	28 0 0
Back numbers, per annum	20 0 0	22 8 0	28 0 0
CALCUTTA SERIES—			
Current issues or back numbers, per annum ...	10 0 0	12 8 0	14 0 0
MADRAS, BOMBAY or ALLAHABAD SERIES—			
Current issues or back numbers, per annum ...	6 0 0	7 8 0	8 0 0
ANY MONTHLY PART—			
Calcutta Series	2 0 0	2 0 0	2 0 0
Madras, Bombay or Allahabad Series	1 0 0	1 0 0	1 0 0

All payments must be made in advance. Remittances to Calcutta should be addressed to the TREASURER, BENGAL SECRETARIAT, *Writers' Buildings, Calcutta.*

PARTS OUT OF STOCK AND DUPLICATE COPIES.

WHEN a requisition is received for any set of the Reports, and any Parts are out of stock, the following deduction from the foregoing rates is made for such Parts:—

	Without postage.	With Indian postage.
	Rs. A. P.	Rs. A. P.
CALCUTTA SERIES—		
All Parts for one year	7 2 6	8 6 3
Any one Part	0 8 9	0 10 3
MADRAS, BOMBAY OR ALLAHABAD SERIES—		
All Parts for one year	4 4 6	4 11 3
Any one Part	0 5 3	0 5 9

If any Part is lost in transit to a subscriber, and the fact is reported to the office of distribution within three months from the date of publication, a duplicate will be supplied at the following rate:—

	Without postage.	With Indian postage.
	Rs. A. P.	Rs. A. P.
CALCUTTA SERIES	0 8 9	0 10 3
MADRAS, BOMBAY OR ALLAHABAD SERIES	0 5 3	0 5 9

REPRINTS.

THE Complete Series for the years 1876 to 1881, 1883, 1886, 1888, 1890, 1892 to 1895 and 1899 to 1903 has been reprinted, and may be purchased at the Bengal Secretariat Book Depôt, Calcutta, either wholly or in part. All Parts required to complete the stock of the Reports for other years are now being reprinted. Complete Reports from the beginning to date will therefore shortly be available at the Bengal Secretariat Book Depôt.

ADVERTISEMENTS FOR THE CALCUTTA SERIES.

ADVERTISEMENTS of law publications only are received. Rates can be ascertained on application to the Bengal Secretariat Book Depôt.

THE BENGAL LAW REPORTS.

SEVERAL volumes of the Bengal Law Reports, from August 1868 to December 1875, and Full Bench Rulings, Parts I and II, are available at the Bengal Secretariat Book Depôt, Calcutta, at the following rates:—

	Without postage.	With Indian postage.
	Rs. A. P.	Rs. A. P.
BENGAL LAW REPORTS, for one year ...	20 0 0	22 8 0
Single copies, each	2 0 0	2 0 0
FULL BENCH RULINGS Part I and II ...	20 0 0	22 8 0

Pure Sulphate of Quinine and Sulphate of Cinchonidine.

MANUFACTURED AT THE BENGAL GOVERNMENT CINCHONA PLANTATION.

FROM 1st April 1905 the price of these articles will be as follows:—

Quinine.

1 Pound tin,	Rs. 16,	or, post free,	Rs. 16-8.
½ "	" "	8	" "	" "	8-6.
¼ "	" "	4	" "	" "	4-6.

Cinchonidine.

1 Pound tin,	Rs. 12,	or, post free,	Rs. 12-8.
½ "	" "	6	" "	" "	6-6.
¼ "	" "	3	" "	" "	3-6.

Analysis shows these articles to be of the purest manufacture; and they are guaranteed to be free from wilful admixture with the inferior alkaloids. They are for sale only to Government officers, and only for cash, and may be had from the Superintendent, Botanic Garden, Sibpur, near Calcutta. Cinchonidine can also be purchased by dealers at the following rates:—

1 Pound tin,	Rs. 16,	or, post free,	Rs. 16-8.
½ "	" "	8	" "	" "	8-6.
¼ "	" "	4	" "	" "	4-4.

Cinchona Febrifuge.

Cinchona Febrifuge can be purchased by all Government officers and by any one taking *five pounds* and upwards at a time from the Superintendent, Botanic Garden, Calcutta, at the following rates—per four-ounce tin, Re. 1 ans. 14; per eight-ounce tin, Rs. 3 ans. 12; per pound tin, Rs. 7 ans. 8; the general public can be supplied by the Superintendent, Botanic Garden, *for cash only*, at the undernoted rates—per four-ounce tin, Rs. 2 ans. 4; per eight-ounce tin, Rs 4 ans. 8; per pound tin, Rs. 9. This medicine is also sold by the principal European and Native druggists in Calcutta. Postage, four annas per four-ounce tin; six annas per eight-ounce tin; and eight annas per pound tin, in addition to the foregoing rates.

THE CALCUTTA GAZETTE.

The 1st March 1901.—From this date the subscription to, and postage for, the *Calcutta Gazette* will be at the following rates, payable in advance:—

PER ANNUM.	For Calcutta.	For the Mofussil including postage.
	Rs. A.	Rs. A.
Entire *Gazette*	15 0	20 0
Parts I, Ia and Ib together ...	5 0	7 8
Part II	1 0	2 12
Parts III, IV and IVa together	4 0	6 0
" V and VI together ..	2 0	3 0
Appendix (Marine Notifications)	1 0	2 12
Supplement	5 0	7 8
PER ISSUE.		
Entire *Gazette*	0 8	0 10
Supplement	0 4	0 5

N B.—Separate Parts of each issue of the *Gazette*, and occasionally important Rules and Extracts, can be obtained from the Officer in charge, Bengal Secretariat Book Depôt, at the rate of one anna for every sixteen pages or a fraction thereof. Postage according to weight.

RATES FOR ADVERTISEMENTS in the *Calcutta Gazette*:—

Full page, per issue	Rs 20
Half " " "	" 10

Casual advertisements, 4 annas per line per insertion.

Parts I, II, and III of a Descriptive Catalogue of the Sanskrit Manuscripts in the Library of the Calcutta Sanskrit College, prepared by Pandit Hrishikesa Sastri and Babu Siva Chandra Gui, M.A., B.L., of that College, are offered to the public for sale. The Catalog being to be completed in 28 parts, the price of each part so is 12 annas a copy, exclusive of postage. Copies can be obtained from the Principal of the Sanskrit College, Calcutta.

GOVERNMENT PUBLICATIONS FOR SALE

At the Bengal Secretariat Book Depôt, Writers' Buildings, Calcutta, and by the following Agents :—

AGENTS IN INDIA.

Messrs. Thacker, Spink & Co., Calcutta and Simla.
Messrs. Newman & Co., Calcutta.
Messrs Higginbotham & Co., Madras.
Messrs. Thacker & Co., Ld., Bombay.
Messrs. A. J. Combridge & Co., Bombay.
The Superintendent, American Baptist Mission Press, Rangoon.
Mrs. Radhabai Atmaram Sagoon, Bombay.
Messrs. R. Cambray & Co., Calcutta.
Rai Sahib M. Gulab Singh & Sons, Proprietors of the Mufid-i-am Press, Lahore, Punjab.
Messrs. S. K. Lahiri & Co., Printers and Booksellers, College Street, Calcutta.
Messrs. V. Kalyanarama Iver & Co., Booksellers, &c., Madras.
Messrs. D. B. Taraporevala, Sons & Co., Booksellers, Bombay.
Messrs. G. A. Natesan & Co., Madras.
Mr. N. B. Mathur, Superintendent, Nazir Kanum Hind Press, Allahabad.
The Calcutta School Book Society.

AGENTS IN ENGLAND.

Mr. E. A. Arnold, 41 and 43 Maddox Street, Bond Street, London, W.
Messrs. Constable & Co., 16 James Street, Hay Market, London, W.
Messrs. Kegan Paul, Trench, Trübner & Co., Charing Cross Road, London.
Mr. B. Alfred Quaritch, 15 Piccadilly, London.
Messrs. P. S. King & Son, 2 & 4 Great Smith Street, Westminster, London.
Messrs. H. S. King & Co., 65 Cornhill, London.
Mr. B. H. Blackwell, 50-51, Broad Street, Oxford.
Messrs. Deighton Bell & Co., Cambridge.

AGENTS ON THE CONTINENT.

Messrs. R. Friedländer & Sohn, Berlin, N. W. Carlstrasse, 11.
Mr. Otto Harrassowitz, Leipzig.
Mr. Karl Hiersemann, Leipzig.
Mr. Ernest Leroux, 28 Rue Bonaparte, Paris.
Mr. Martinus Nijhoff, The Hague.

NOTICE.—Books required for private use can be purchased. Applications should be accompanied by remittance in each case.

All remittances on account of subscriptions to, or prices of, Gazettes, Indian Law Reports or other Government publications available for sale at the Bengal Secretariat Book Depôt, or for cost of advertisements published in the Gazettes should, in future, be made payable to the "Treasurer, Bengal Secretariat, Calcutta." Advices of such remittances, if separately sent, should be addressed to the "Accountant, Bengal Secretariat." All advertisements intended for publication in the *Calcutta* or *Bengali Gazette* should be sent direct to the Superintendent, Government Printing, Bengal.

Books required for the Public Service should be obtained through the Heads of Departments.

☞ *The amounts within parentheses are for packing and postage.*

NEW PUBLICATIONS ISSUED DURING THE CURRENT QUARTER.

APPOINTMENT DEPARTMENT.

Quarterly Civil List for Bengal, corrected up to 1st April 1905. Rs. 3. (4*a*.)

FINANCIAL DEPARTMENT.

Report on the Maritime Trade of Bengal for the official year 1904-05. F'cap. Paper cover Re. 1 (2*a*.).

GENERAL DEPARTMENT.

Kurukh Folk-lore in the original collected and transliterated by Revd. Ferd Hahn. F'cap. 4to, cloth. Rs. 2. (3*a*.)
List of officers in the Subordinate Educational Service, Bengal, corrected up to 1st April 1905. F'cap Paper cover. As. 8 (1*a*.).

LEGISLATIVE DEPARTMENT.

The Sunderbans Act 1905 (Ben. Act I of 1905) in English, Bengali or Hindi. 6*p*. (1*a*.)
The Bengal Repealing Act 1905 (Ben. Act II of 1905) in English, Bengali or Hindi. 6*p*. (1*a*.)
The Chota Nagpur Rural Police Act, 1887 (Bengal Act V of 1887), as modified up to 1st June 1904, in Bengali. As. 2-6. (1*a*.).
The Bengal Smoke Nuisances Act 1905 (Bengal Act III of 1905) in English or Hindi. As. 2 (1*a*.).
The Indian Paper Currency Act 1905 (III of 1905) in Bengali or Uriya. As. 2. (1*a*.)
Ditto ditto in Hindi. As. 2-6. (1*a*.)
The Indian Railway Boards Act 1905, (IV of 1905) in Bengali, Hindi or Uriya. 6*p*. (1*a*.)

POLITICAL DEPARTMENT.

Administration Report on the Jails of Bengal for the year 1904. F'cap., boards. Paper cover. Rs. 3 (4*a*.).

PUBLIC WORKS DEPARTMENT.

Classified List and Distribution Return of the Bengal Public Works Department, Establishment, corrected up to 31st March 1905. As. 4. (2*a*.)

REVENUE DEPARTMENT.

A Monograph on Gold and Silver Work in the Bengal Presidency. By D. N. Mookherjee, Assistant Director, Land Records and Agriculture. F'cap. Paper cover. Re. 1-8. (2*a*.)
Annual Report on the Survey Operations in Bengal during the year 1903-04. F'cap. Paper cover. Re. 1 (2*a*.).
Annual Progress Report on Forest Administration in the Lower Provinces of Bengal for the year 1903-04. F'cap. Paper cover. Re. 1-4 (2*a*.).
Annual Report of the Director of the Department of Land Records and Agriculture, Bengal, on Settlements and Land Records for the year ending 30th September 1904. F'cap. Paper cover, As. 8 (2*a*.).

An account of the Research work in Indigo carried out at Dalsing Sarai Research Station (under subsidy of the Government of Bengal) from 1903 to March 1904. by W. Popplewell Bloxam and H. M. Leake. F'cap., board. Paper cover. Rs. 5 (4s.).
Report on an inquiry into the state of the Tasar Silk Industry in Bengal and the Central Provinces of India. By N. G. Mukerjee. F'cap. Paper cover. Rs. 2. (2s.)
Annual Report of the Burdwan Experimental Farm for the year 1903-04. F'cap. Paper cover. As. 2. (1s.)

NEW PUBLICATIONS ISSUED BETWEEN 1ST OCTOBER 1904 AND THE 31ST MARCH 1905.

APPOINTMENT DEPARTMENT.

Quarterly Civil List of Bengal, corrected up to 1st January 1905. Rs. 3. (4s.)

FINANCIAL DEPARTMENT.

Report on the Road and Public Works Cess Operations of the Lower Provinces for the official year 1903-04. F'cap. Paper cover. Rs. 2. (2s.)
Report on the Administration of the Excise Department in the Lower Provinces of Bengal for the year 1903-04. F'cap. Paper cover. Rs. 2. (2s.)

GENERAL DEPARTMENT.

Report on Inland Emigration during the year ending 30th June 1904. F'cap. Paper cover. As. 8. (1s.)

General Report on Public Instruction in Bengal for 1903-04. F'cap. Paper. Re. 1-5-8. (2s.)
List of Officers in the Subordinate Educational Service, Bengal, corrected up to 1st January 1905. As. 8. (1s.)
Bengal Administration Report, 1903-04. F'cap. Cloth. Rs. 3. (6s.)

JUDICIAL DEPARTMENT.

Annual Report on the Police Administration of the Town of Calcutta and its suburbs for the year 1903. F'cap. Paper cover. Re. 1. (2s.)

LEGISLATIVE DEPARTMENT.

The Chota Nagpur Landlord and Tenant Procedure Act (Bengal Act I of 1879, modified) with notes by H. W. C. Carnduff. Re. 1-8. (2s.)
The Indian Emigration (Amendment) Act 1904 (XII of 1904) in Bengali, Hindi or Uriya. 6p. (1s.)
The Indian Stamp (Amendment) Act 1904 (XV of 1904) in Bengali, Hindi or Uriya. 1s. (1s.)
The Local Authorities Loans Act 1905, (I of 1905) in Bengali, Hindi or Uriya. 6p. (1s.)
The Indian Universities Validation Act 1905 (II of 1905) in Bengali, Hindi or Uriya. 6p. (1s.)
The Stage Carriages Act 1861 (XVI of 1861 as modified up to 1st February 1898, in Hindi. As. 3. (1s.)
The Indian Evidence Act 1872, (I of 1872) as modified up to 1st November 1902, in Hindi. As. 14 (1s.)
The Indian Explosives Act 1884 (IV of 1884) as modified up to 1st December 1903, in Hindi. As. 2. (1s.)
The Bengal Tenancy Act 1885 (VIII of 1885) as modified up to 1st December 1903, in Uriya. Re. 1. (2s.)
The Indian Railway Act 1890, (IX of 1890) as modified up to 1st May 1896 and corrected up to the 1st December 1903, in Hindi. As. 13. (1s.)

MUNICIPAL DEPARTMENT.

List of qualified Medical Practitioners in Bengal, 1904. Royal 8vo. Boards. Paper cover. Re. 1. (2s.)
Resolution reviewing the working of Municipalities in Bengal during the year 1903-04. F'cap. Paper cover. Re. 1. (2s.)
Resolution reviewing the Reports on the working of District Boards in Bengal during the year 1903-04. F'cap. Paper cover. Re. 1. (1s.)

PUBLIC WORKS DEPARTMENT.

Conditions under which Electric Meters and other instruments will be accepted for testing in the Government Electrical Laboratory, Calcutta, and Table of Fees. F'cap. Paper cover. 1s. (1s.)
Revenue Report of the Government of Bengal, Public Works Department, Irrigation Branch, for the year 1903-04. F'cap. Boards. Paper cover. Rs. 2. (3s.)
Classified List and Distribution Return of Establishment of the Public Works Department, Bengal, corrected up to 31st December 1904. Rs. 4. (2s.)
Resolution on the Embankment and Drainage Reports of the Government of Bengal, Irrigation Department, for the year 1903-04. F'cap. Boards. Paper cover. Re. 1. (2s.)

REVENUE DEPARTMENT.

Annual Report on the Survey Operations in Bengal during 1903-04 (from October 1903 to September 1904). F'cap. Paper cover. Re. 1. (2s.)
Final Report on the Survey and Settlement Operations in the Saran District, 1893 to 1901, by J. H. Kerr, Esq., Settlement Officer, North Bihar. F'cap. Boards, paper cover. Rs. 4-8. (6s.)
Final Report on the Survey and Settlement Operations in the Darbhanga District, 1896 to 1903, by J. H. Kerr, Esq. F'cap. Boards, paper cover. Rs. 6. (5s.)
Abstract of the Indian Factories Act, 1881, in sheet form, for hanging up in Factories. In English and Hindi and Urdu. As. 4. (1s.) unmounted. Re. 1-4 mounted.
Agricultural Statistics of the Lower Provinces of Bengal for 1903-04. F'cap. Paper cover. As. 8. (1s.)
Report on Wards and attached Estates in the Lower Provinces for the year 1903-04. F'cap. Paper cover. Re. 1-8. (2s.)
Report on the Land Revenue Administration of the Lower Provinces for the year 1903-04. F'cap. Paper cover. Rs. 3. (2s.)

STATISTICAL DEPARTMENT.

The Trade of Bengal with Nepal, Thibet, Sikkim and Bhutan for the year ending March 1904. Boards. Paper cover. Re. 1-2. (2s.)
Report on the Trade carried by Rail and River in Bengal in the official year 1903-04. F'cap. Board. Paper cover. Rs. 4. (5s.)

OLDER PUBLICATIONS.

A General Catalogue of all Government Publications (corrected up to 30th June 1904) may be obtained *gratis* on application to the Officer in charge, Bengal Secretariat Both Dept.

Publications for sale at the office of the Chief Inspector of Explosives with the Government of India.

Rules for the manufacture, possession and sale of explosives issued by each of the Local Governments and Administrations. Price 12*a*.
Rules for the transport and importation of explosives issued by the Government of India. Price 12*a*.
Rules for the transport and importation of explosives at the Port o Calcutta. Price 4*a*.

Publications for sale at the Custom House, Calcutta.

Review of the Maritime Trade of Bengal and its Chief Port (Calcutta) for the year 1904-05. Price Re. 1.
Annual Statement of the Sea-borne Trade and Navigation of Bengal, Foreign and coasting combined in one volume, for the year 1903-04. Price Rs. 6.
Ditto for 1904-05 will be ready early in September. Price Rs. 6.
Previous years' volumes can be obtained at the same price.

GOVERNMENT PUBLICATIONS FOR SALE

BY THE SUPERINTENDENT OF GOVERNMENT PRINTING, INDIA, 8 HASTINGS STREET, CALCUTTA.

A General Catalogue of all Government Publications may be obtained gratis from the Government Central Press, Calcutta.

All books published by the Superintendent of Government Printing, India, can be purchased, either directly or through the following or any other booksellers:—

AGENTS IN EUROPE.

Mr. E. Arnold, 41 and 43 Maddox Street, Bond Street, W. London.

Messrs. Constable & Co., 16 James Street, Haymarket, W., London.

Messrs. Kegan Paul, Trench, Trubner & Co., Charing Cross Road, London.

Mr. Bernard Quaritch, 15 Piccadilly, London.

Messrs. P. S. King and Son, 2 & 4 Great Smith Street, Westminster.

Messrs. H. S. King & Co., 65 Cornhill, and 9 Pall Mall, London.

Messrs. Grindlay & Co., 54 Parliament Street, London, S W., Agents for the sale of the Army List.

Mr. Otto Harrassowitz } Leipzig.
Mr. Karl Hiersemann }

Messrs. R. Friedlander & Sohn, Berlin, W. N. Carlstrasse, 11

Mr. Ernest Leroux, 28 Rue Bonaparte, Paris.

Mr. Martinus Nijhoff, Hague, Holland.

Mr. B. H. Blackwell, 50 & 51 Broad Street, Oxford.

Messrs. Deighton Bell & Co., Cambridge.

AGENTS IN INDIA.

Messrs. Thacker, Spink & Co., Calcutta and Simla.

Messrs. Newman & Co., Calcutta.

Messrs. R. Cambray & Co., Calcutta.

Messrs. S. K. Lahiri & Co., Calcutta.

Eveyln, Hubert, & Co.,* 149, Dhurmotollah Street, Calcutta.

Messrs. Higginbotham & Co., Madras.

Messrs. V. Kalyanarama Iyer & Co., Madras.

Messrs. G. A. Natesan & Co., Madras.

Messrs. Thacker & Co., Ld., Bombay.

Messrs. A. J. Combridge & Co., Bombay.

Messrs. D. B. Taraporevala, Sons & Co., Bombay.

Mrs. Radhabai Atmaram Sagoon, Bombay.

Superintendent, American Baptist Mission Press, Rangoon.

Rai Sahib M. Gulab Singh & Sons, Mufid-i-Am Press, Lahore.

Mr. N. B. Mathur, Superintendent, Nazair Kanun Hind Press, Allahabad.

Manager, Educational Book Depots, Nagpur and Jubbulpore.*

Manager of the Imperial Book Depot, 63 Chandny Chauk Street, Delhi.*

Manager, "East Coast News," Vizagapatam.*

Manager, "The Agra Medical Hall and Co-operative Association, Limited" (Successors to A. John & Co., Agra).*

Mr. T. K. Seetharama Aiyar, Kumbakonam.*

Lala Debi Prasad, Vakil and Manager of Law Press, Cawnpore.*

Superintendent, Basel Mission Book and Tract Depository, Mangalore.*

Messrs. P. Varadachary & Co., Madras.*

Mr. Sunder Pandurang, Bombay.*

The Mercantile Mission Branch, Calicut.*

H. Dowman, Esq. (late Extra Assistant Superintendent, Survey of India), Allahabad.*

H. Liddell, Esq., Printers, etc., 7, South Road, Allahabad.*

* Agents for sale of the Legislative Department publications.

NOTICE.—Books and Acts required for private use only can be purchased. Applications should be accompanied by a remittance, unless it is wished that the books should be sent by value-payable post, in which case, besides the ordinary postage, an additional charge is made for registration and commission.

Books and Acts required for the public service should be obtained through Local Governments to whom the applicant is subordinate.

Application for Government publications which are no longer in print should be made to the Agents of the particular Government under whose orders they were originally issued.

(The amounts within parentheses are for packing and postage.)

List of New Books published during the Current Quarter

LEGISLATIVE DEPARTMENT.

The Bengal Code, Vol. II. 3rd Edition, 1905. (Now ready). Cloth. Super-Royal 8vo. Rs. 6 or 9s. (10a.)

The Ajmere Code, 3rd Edition, 1905. Cloth. Super-Royal 8vo. Rs. 2-8 or 3s. 9d. (7a.)

Act XIII of 1885, The Indian Telegraph Act, 1885, as modified up to 1st March 1905. 5a. (1a.)

Act III of 1900, The Prisoners Act, as modified up to 1st March 1905. 6a. 6p. (1a.)

HOME DEPARTMENT.

Scientific Memoirs by Officers of the Medical and Sanitary Departments of the Government of India—Oriental or Delhi Sore by Captain S. P. James, M.B., I.M.S., New series, No. 13. Super-Royal 4to. Limp cover. 10a. or 1s. (3a.)

Scientific Memoirs by Officers of the Medical and Sanitary Department of the Government of India—On a parasite found in the White Corpuscles of the blood of dogs by Captain S. P. James, M.B., I.M.S. New series No. 14. Super-Royal 4to. Limp cover. 10a. or 1s. (3a.)

Scientific Memoirs by Officers of the Medical and Sanitary Departments of the Government of India—On a parasite found in persons suffering from Enlargement of the Spleen in India (Third Report), by Lt. S. R. Christophers, M.B., I.M.S., New series, No. 15. Super Royal. 4to. Limp cover. 10a. or 1s. (2a.)

Scientific Memoirs by Officers of the Medical and Sanitary Departments of the Government of India. The specificity of antivenomous Sera with special reference to a Serum prepared with the venom of Daboia Russelli by Captain George Lamb, M.D., I.M.S. New series, No. 16. Super-Royal 4to. Limp cover. 6a. or 7d. (2a.)

Imperial Library List of Additions, Third Series, with subject index, March 1905. No. 7, 8 and 9, Super-Royal 4to. Paper cover. 8a. or 9d. (2a.) each.

The Private Diary of Ananda Ranga Pillai, Vol. I, 1736 to 1746.—Dubash to Joseph Francois Dupleix, Knight of the Order of St. Michael, and Governor of Pondichery.—A record of Matters, Political, Historical, Social, and Personal, from 1736 to 1761. Translated from the Tamil by the order of the Government of Madras and Edited by Sir J. Frederick Price, K.C.S.I., late of the I.C.S., assisted by R. Rangachari, B.A. Rs. 3 or 4s 6d. (7a.)

Quarterly List of Officers in the Department of the Government of India, April 1905 Foolscap, paper cover. 4s. or 6d. (1s.)

Annual Report of the National Association for Supplying Female Medical Aid to the Women of India for the year 1904. (20th issue.) Royal 8vo. Limp cover. Re or 1s. 6d. (2s.)

Fauna of British India, Butterflies. Vol. I, by Colonel C. T. Bingham. Royal 8vo. cloth. Rs. 15 or 22s. 6d. (7s.)

REVENUE AND AGRICULTURE DEPARTMENT.

Progress Report of Forest Administrations in the Andamans for 1903-04. Foolscap. Paper cover. 8s. or 9d. (2s.)

Progress Report of Forest Administration in Baluchistan for 1903-04. Foolscap. Paper cover 8s. or 9d. 2s.)

Technical Art Series for 1904. Nos. I to XIII with their explanatory text and cover. Rs 3-4 (4s.) per set or 6 per plate 1s.)

History of Services of the Officers of Engineer, Accounts and State Railway Revenue. Establishments corrected to 31st December 1904. Vols I and II (complete). Royal 8vo. Board Rs 5 (9s.)

FOREIGN DEPARTMENT.

Report on the Political Administration of the territories within the Central India Agency for 1903-04. Selection No. CCCCXVI.) Foolscap, board. Re. 1 or 1s 6d. (2s.)

Report on the working of the Thagi and Dakaiti Department for 1903. (Selection No. CCICCI.) Foolscap, paper cover 9s. or 11d. (1s.)

Administration Report on the Persian Gulf Political Residency and Maskat Political Agency for 1903-04. (Selection No. CCCCXI.) Foolscap, board. Re 1 or 1s 6d (2s.)

Administration Report of the Baluchistan Agency for 1903-04. (Selection No. CCCCXVII. Foolscap. Board. Re. 1-12 or 2s. 8d (3s.)

Report on the Political Administration of the Rajputana States and Ajmere-Merwara for 1903-1904 (Selection No. CCCCXVIII.) Foolscap, board. Re. 2 or 3s (6s.)

Report on Sanitation, Dispensaries and Jails in Rajputana for 1903 and on Vaccination for the year 1903-1904. (Selection No. CCCCXIV.) Foolscap, board. Re. 1 or 1s. 6d. (4s.)

FINANCE DEPARTMENT.

Financial Statement for 1904-05 and 1905-06. Foolscap, board. Re. 1-8 or 2s. 3d. (6s.)

COMPTROLLER-GENERAL.

Appropriation Report on the Accounts of the Government of India for 1903-04 by A. F. Cox. Esq. Foolscap. Board. 8s. or 9d. 6s.)

STATISTICAL DEPARTMENT.

Sea-Borne Trade and Navigation Accounts for British India for the month of February 1905. No. 11 of 1904-05 Royal 8vo. Stitched. 8s. or 9d. (2s.)

Accounts of the External Land Trade of British India for the month of December 1904, No. 9 of 1904-05. Royal 8vo., stitched 8s. or 9d. (2s.)

Statistics of cotton spinning and weaving in the Indian Mills in January 1905 and in the ten months, April 1904 to January 1905, compared with the corresponding period of 1902-03 and 1903-04. Royal 8vo., stitched 2s. or 2d (1s.)

Statistics of Cotton Spinning and Weaving in the Indian Mills in February 1905 and in the 11 months. April 1904 to February 1905, compared with the corresponding period of 1902-03 and 1903-04. Royal 8vo. Stitched 2s or 2s. (1s.)

Accounts relating to the Trade carried by rail and river in India in the quarter and in six months ending September 1904, compared with the corresponding periods of the years 1902 and 1903 No. 2 of 1904-05. Foolscap, paper cover. 8s. or 9d. (3s.)

Sea-Borne Trade and Navigation Accounts of British India for the month of March April 1905. No. 11. Royal 8vo. Stitched. 8s. or 9d. (2s.) each.

Accounts relating to the Sea-borne Trade and Navigation of British India for the calendar year 1904. compared with the years 1902 and 1903. 8s. or 9d. (1s.)

MILITARY DEPARTMENT.

The Quarterly Indian Army List for April 1905, New series, No. 4. Royal 8vo., paper cover Rs 3 or 4s. 6d. (8s.)

India Military Budget Estimate for the year 1905-1906. Foolscap, board. Rs. 1-8, or 2s. 3d. (8s.)

RAILWAY BOARD.

Report (dated 30th December 1903) on the Organisation and Working of Railways in America by Neville Priestley. Esq. Foolscap. Paper cover. Rs. 3 or 4s. 6d. (3s.)

List of Books published from October 1904 to March 1905.

LEGISLATIVE DEPARTMENT.

The Indian Registration Act, 1877 (III of 1877), as modified up to 1st April, 1900, with footnotes brought down to 1st November, 1902. 11s. (2s.)

The Indian Emigration Act, 1883 (XXI of 1883), as modified up to 1st December, 1902. 1s.

Act XXX of 1852. An Act for the Naturalization of Aliens. as modified up to 1st December, 1902. 2s. (1s.)

Act V of 1861. The Police Act, 1861. As modified up to 7th March, 1906. 7s. 6p. (1s.)

Act X of 1873. The Indian Oaths Act. As modified up to 1st February, 1903. 3s. 9p. (1s.)

Act XIX of 1883. The Land Improvement Loans Act, 1883 As modified up to 1st February, 1903. 2s. 6p. (1s.)

Act XII of 1884. The Agriculturists' Loans Act, 1884. As modified up to the 15th December, 1896, and with footnotes brought down to the 1st February, 1903. 2s (1s.)

Act IX of 1890. The Indian Railways Act, 1890. As modified up to 1st May, 1896, with footnotes brought down to 1st January, 1903. 15s. (3s.)

Act XXXIV of 1850. The State Prisoners Act, 1850. As modified up to 30th April, 1903. 2s. 6p. (1s.)

Act XXXV of 1858. The Lunacy (Supreme Courts) Act, 1858. As modified up to 30th April, 1903. 4s. 3p. (1s.)

Act XXXV of 1858. The Lunacy (District Courts) Act, 1858. As modified up to 30th April, 1903. 2s. 3p (1s.)

Act V of 1873. The Government Savings Banks Act, 1873. As modified up to 1st April, 1903. 3s. 6p. (1s.)

Act II of 1886. The Indian Income Tax Act 1886. As modified up to 1st April, 1903. 8s (1s. 6p.)

Act I of 1878. The Opium Act, 1878. As modified up to 1st December, 1896, with footnotes brought down to 1st March, 1903 5s. 6p. (1s.)

Act III of 1865. The Carriers Act, 1865. As modified up to 31st May, 1903. 3s. (1s.)

Act IX of 1897 Amending the law relating to Government and other Provident Funds. As modified up to 1st May, 1896, with footnotes brought down to 1st January, 1903. 1s. 6p. (1s.)

Act No. XII of 1855 (Legal Representatives Suits), as modified up to 1st November. 1904. 1s 6p. (1s.)

Act No. IX of 1860 [Employers and Workmen (Disputes)], as modified up to 1st December, 1904. 1s 6p. 1s.)

Act No XXI of 1860 (Societies Registration) as modified up to 1st December, 1904. 2s 9p 1s.)

The Punjab Laws Act, 1872 (IV of 1872), as modified up to 1st November, 1904. 7s 1s. 1s.)

...an Christian Marriage Act, 1872 (XV 1872), as modified up to 1st December, 1904. 1s. (1a.)

...t I.P.C. of 1891 (Indian Penal Code Amendment), as modified up to 1st December 1904 1a. (1a.)

The Indian Petroleum Act, 1899 (VIII of 1899), as modified up to the 1st December 1904. 7a. (1a.)

The Indian Extradition Act, 1903 (XV of 1903), as modified up to 1st December, 1904. 5a. 6p. (1a.)

Act V of 1869. The Indian Articles of War, as modified up to 1st December 1904. Royal 8vo. Stitched. Re. 1 2a. (3a.)

Act XV of 1881. The Indian Factories Act. 1881, as modified up to the 1st December 1904. Royal 8vo. Stitched. 5a. 6p. (1a. 6p.)

Act V of 1883. The Indian Merchant Shipping Act, 1883, as modified up to the 1st December, 1904 Royal 8vo. Stitched. 6a. (1a.)

The Central Provinces Code, 3rd Edition, 1905. Cloth. Super-Royal 8vo. Re. 4 or 6s. (6a.)

The Bengal Code, Volume I, 3rd Edition, 1905 (Now ready). Cloth. Super-Royal. Price all 5 Volumes Rs. 30 or 45s. Vol. I. Re. 6 or 9s. (8a.)

The Public Gambling Act, 1867 (III of 1867), as modified up to the 1st January, 1905. As. 4 or 6d. (1a.)

The Indian Contract Act, 1872 (Act IX of 1872), as modified up to the 30th June, 1901. Royal 8vo. Stitched. Re. 1-4a. (2a.)

HOME DEPARTMENT

Scientific Memoirs by Officers of the Medical and Sanitary Departments of the Government of India. On a parasite found in persons suffering from enlargement of the spleen in India, by Lieut. S. R. Christophers, M.B., I.M.S, New series, No. 11. Super-Royal 4to. Limp cover. Rs. 2 or 3s. (3a.)

Report on the Administration of Criminal Justice in Lower Provinces of Bengal during the year 1903. Foolscap. Paper cover Re. 1. or 1s. 6d. (2a.)

Imperial Library List of Additions. September to December 1904, Nos. 1—6. Foolscap. Paper cover. As. 8 or 9d. (2a.) each.

Report on the Administration of Civil Justice in the Lower Provinces of Bengal during the year 1903. Foolscap. Paper cover. Re. 1 or 1s. 6d. (3a.)

Scientific Memoirs by Officers of the Medical and Sanitary Departments of the Government of India on the Morphology, Teratology and Declinism of the Flowers of Cannabis By Major D. Prain, M.B., I.M.S. New series. No. 12. Super-Royal 4to. Limp cover. 14a. 1s. 4d. (3a.)

Quarterly List of Officers in the Departments of the Government of India, October to December 1904, January to March 1905. Foolscap. Paper cover As. 4 or 5d (1a.)

Annual Report of the Sanitary Commissioner with the Government of India, 1903, with Appendices and Returns of sickness and Mortality among European Troops, Native Troops and Prisoners in India for the year. Foolscap. Board. Rs. 3 or 4s. 6d. (8a.)

Report of the Indian Police Commission, 1902-03. Foolscap. Board. With appendices Re. 1-8a. (7a.); without appendices, Re. 1-8a. (7a.)

DEPARTMENT OF REVENUE AND AGRICULTURE.

Report of the Chief Inspector of Mines in India for the year ending 31st December 1903. Foolscap. Board. As. 12 or 1s. 2d. (2a.)

Review of Forest Administration in British India for the year 1902-03. Foolscap., Paper cover. Re. 1-11 or 2s. 6d. (3a.)

Annual Administration Report of the Civil Veterinary Department in India for the official year 1903-04. Foolscap. Paper cover. 12a. or 1s. (2a.)

Records of the Botanical Survey of India, Vol. IV, No. 1 (An Epitome of the British Indian Species of impatients by Sir J. D. Hooker, G.C.S.I., C.B, F.R.S. Part I. Royal 8vo. Paper cover. 3a or 4d. (1a.)

Records of the Botanical Survey of India, Vol III, No. 2. The vegetation of the districts of Hughli, Howrah and the 24-Parganas, by D. Prain, Esq. Re. 1-12, or 1s. 8d. (3a.)

Rules framed under section 20 of the Indian Mines Act, 1901 (VIII of 1901) prescribing the Compulsory submission of Annual returns of output and labour of Indian Mines. Foolscap. 0-0-6. (1a.)

Rules for the Lease or Sale of Waste Lands in India. 1904 edition. Foolscap. Board. Rs. 4 or 6s. (8a.)

Archæological Survey of India. Annual Report, 1902-03. Super-Royal. Cloth. Rs. 20 or £1 10s. (Re. 1 2a.)

Annual Report of the Board of Scientific Advice for India for the year 1903-04. Foolscap. Paper cover. 6a. or 7d. (2a.)

List of Officers in the Department of Revenue and Agriculture, Government of India, and the Departments subordinate to it, corrected to 1st January 1905. As. 8 or 8d. (2a.)

FOREIGN DEPARTMENT.

Report on the Political Administration of the Territories within the Central India Agency for 1902-03. Foolscap Board. Re. 1 or 1s 6d. (3a.)

Report on the Administration of the Civil and Military Station of Bangalore for the year 1902-03. 8a. or 9d. (2a.)

Report on the Administration of Berar for the year 1902-03. Foolscap. Board. Rs. 2 or 3s. (2a.)

Report on the Administration of the Civil and Military Station of Bangalore for the year 1903-04. Foolscap. Limp cover. 8a. or 9d. (2a.)

FINANCE DEPARTMENT.

Report on the Administration of the Mint at Bombay and Calcutta for the year 1903-04. Foolscap. Paper cover. Re. 1 or 1s. 6d (2a.)

Statistics Compiled from the Finance and Revenue Accounts of the Government of India. Receipts and Disbursemets of Home and Indian Accounts from 1st April 1895 to 31st March 1903. Foolscap. Board. Rs. 2 or 3s. (9a.)

List of Officers in the Finance and Commerce Department, corrected to 31st October, December 1904, January and February 1905. Royal 8vo. Paper cover. 4a. or 5d. (1a.)

COMPTROLLER-GENERAL.

Finance and Revenue Accounts of the Government of India for the year 1903-04. Foolscap. Board. Rs. 2. or 3s. (8a.)

STATISTICAL DEPARTMENT.

Statistics of Cotton Spinning and Weaving in the Indian Mills in June 1904 and in the three months, April to June 1904, compared with the corresponding period of 1902 and 1903, No. 5 of 1904-05. Royal 8vo. Stitched. 2a. or 2d. (1a.) each.

Trade and Navigation Accounts of British India for the months of August, September and October 1904. Nos. 5, 6 and 7 of 1904-05. Royal 8vo. Stitched. 8a. or 9d. (2a.) each.

Accounts of the External Land Trade of British India for the months of June, July and August 1904. Nos. 3, 4 and 5 of 1904-05. Royal 8vo. Stitched. 8a. or 9d. (2a.) each.

Statistics of Cotton Spinning and Weaving in the Indian Mills in July, August, September, October, November, December 1904. Royal 8vo. Stitched. 2a. or 2d. (1a.) each.

Judicial and Administrative Statistics of British India for 1902-03 and preceding years. 8th issue. Foolscap. Board. Re. 2 or 3s. (10a.)

Accounts of the French Possessions in India in the year ending 31st March 1904 and the four preceding years. Foolscap. Paper cover. 2a. or 2d. (1a.)

Accounts of the Trade of Aden in the year ending 31st March 1904 and the four preceding years. Foolscap. Paper cover. 10a. (1a.)

Area and yield of certain principal crops in India. Sixth issue. Foolscap. Paper cover. 5a. or 6d. (2a.)

Sea-Borne Trade and Navigation Accounts of British India for the months of November, December 1904, January 1905. Nos. 8, 9 and 10 of 1904-05. Royal 8vo. Stitched. 8a. or 9d. (2a.)

Accounts of the External Land Trade of British India for the month of September, October 1904. Nos. 6, 7 and 8 of 1904-05. Royal 8vo. Stitched. 8a. or 9d. (2a.)

Agricultural Statistics of India for the years 1898-99 to 1902-03 in two Volumes. Foolscap. Board. Both Volumes. Rs. 3-8*a.* or 5*s.* 3*d.* (12*a.*)

Accounts relating to the trade carried by Rail and River in India in the quarter ending June 1904, compared with the corresponding period of the years 1902 and 1903. No. 1 of 1904-05. Foolscap. Paper cover. 8*a.* or 9*d.* (3*a.*)

Financial and Commercial Statistics of British India, II issue, 1904. Super-Royal, Paper cover. Rs. 4 or 6*s.* (12*a.*)

Tariff Shcedules, 1905. Royal 8vo. Stitched. 6*a.* or 7*d.* (1*a.*)

Annual Statement of the Coasting Trade and Navigation of British India in the year ending 31st March 1904. Super-Royal. Board. Rs. 2 or 3*s.* (7*a.*)

ACCOUNTANT-GENERAL.

History of Services of Gazetted and other Officers serving under the Government of Bengal, corrected to 1st July 1904. In two parts. Royal 8vo. Board. Rs. 5 or 7*s.* 6*d.* (12*a.*)

MILITARY DEPARTMENT.

Return of Wreck and Casualties in Indian Waters, 1902-03. Foolscap. Board. Re. 1 or 1*s.* 6*d.* (3*a.*).

Class Hand Books for the Indian Army—Mappillas or Moplahs, by Major P. Holland Pryor. Royal 8vo. Board. Re. 1-4 or 1*s.* 11*d.* (5*a.*)

Hand Book for the Indian Army—Jats, Gujars, and Ahirs, by Major A. H. Bingley. Royal 8vo. Board. Re. 1 or 1*s.* 6*d.* (5*a.*)

Classified List and Distribution Return of the Establishment of the Military Works Services corrected up to 31st December 1904. Royal 8vo. Paper cover. 4*a.* or 5*d.* (1*a.*)

RAILWAY BOARD

Administration Report of the Telegraph Department for 1903-04. Foolscap. Paper cover. 8*a.* or 6*d.* (2*a.*)

Public Works Department Classified List of the Subordinate Establishment, corrected to 30th June 1904. Royal 8vo. Paper cover. 4*a.* or 5*d.* (1*a.*)

Public Works Department Classified List and Distribution of Establishment corrected up to 31st December 1904. Super-Royal 8vo. Paper cover. Rs. 2 or 3*s.* (4*a.*)

Selections from the Records of the Government of India in the Public Works Department, No. CCXXXVIII.—Relative Merits of Broad and Metre Gauge Lines of Railway. Foolscap. Board. 4*a.* or 5*d.* (1*a.* 6*p.*)

Classified List of the Subordinate Establishment corrected up to 31st December 1904. Royal 8vo. Paper. 4*a.* or 5*d.* (1*a.*)

List of new books for sale at Thomason College, Roorkee which were not advertised before.

Roorkee Treatise on "Railways," 4th Edition, revised by F. Wolly Dod, F.C.S. Price, Rs. 3 per copy.

Roorkee Treatise on "Irrigation Work." By Lieutenant-Colonel J. Clibborn, I.S.C., B.A., L.C.E., C.I.E. Price, Rs. 9 per copy.

Roorkee Treatise on "Sanitary Engineering." Compiled by Lieutenant-Colonel J. Clibborn, I.S.C., B.A., L.C.E., C.I.E. Price, Rs. 4-8 per copy.

Roorkee Manual of "Applied Mechanics," Volume II. The stability of structures mostly by graphic methods, by Lieutenant-Colonel J. H. C. Harrison, R.E. Price, Rs. 8-2 per copy.

Roorkee Manual of Hydraulics. Price per copy, Re. 1-4. (No. XIX, Elementary Treatise.) By E. F. Tipple, Esq., B.A.

Designs for Wooden Bridges, together with rules for calculating the area of waterway, etc, and Plates. By late Rai Bahadur Kunhya Lal. Price per set, Rs. 4-2

Pamphlet on Examination for Acid Radicals: Tables giving Analysis of Acids. Price per copy, 8*a.*

Pamphlet on Examination for Acid Bases: Tables giving Analysis of Metallic Bases. Price, 8*a.* per copy.

List of New Books available for sale in the College Book Depot.

Roorkee Treatise on Civil Engineering, Section XIII. Drawing for Engineer students, Part I. By Major E. H. deV. Atkinson, R.E., Principal, Thomason College, Roorkee. Price per copy Rs. 3-3, including packing, postage, etc.

Hand-Book of the Thomason Engineering College, Roorkee, Illustrated. Price Rs. 6-12 per copy, including packing, postage, etc.

A list of new books and periodicals for sale at the Library of the Asiatic Society of Bengal, 57 Park Street, Calcutta.

SOCIETY'S PUBLICATIONS.

Proceedings Nos. 9 and 10, at 8*a.*

BIBLIOTHECA INDICA.

Chaturvarga Chintamani. Vol. IV, Fasc. 3, at 6*a.*
Catasahasrika Prajnaparamita. Vol. II, Fasc. 9, at 6*a.*
Mahabhasyaprodipoddyota. Vol. III, Fasc. 1, at 6*a.*
Suddhi Kaumudi. Fasc. 3, at 6*a.*
Vidhana Parijata. Vol. I, Fasc. 7, at 6*a.*

List of books published by the Meteorological Department from 1st October 1904 to 31st March 1905.

Monthly Weather Review, April to September 1904. (Illustrated by 6 plates.) Quarto. Paper cover, Re. 1 per month.
Indian Meteorological Memoirs, Vol. XVI. Part II. By Sir John Eliot. Quarto. Paper cover. Rs. 3.

List of Books published by the Meteorological Department during the current quarter.

Monthly Weather Review, October 1904. (Illustrated by 6 plates.) Quarto. Paper cover. Re. 1.
Indian Meteorological Memoirs, Vol. XVI, Part II. By Sir John Eliot. Quarto. Paper cover. Rs. 3.
Annual Summary of the Monthly Weather Review, 1903. (Illustrated by 6 plates.) Quarto. Paper cover. Rs. 3.
Monthly Weather Review, November 1904. (Illustrated by 6 plates.) Quarto. Paper cover. Re. 1.

List of new books published by the Geological Survey of India during the week ending 22nd April 1905.

Records of the Geological Survey of India, Vol. XXXII, Part II. Re. 1.
Memoirs of the Geological Survey of India Palæontologia Indica. New Series. Vol. II. Memoir No. 2. Re. 1.

APPENDIX TO

The Calcutta Gazette.

WEDNESDAY, JUNE 14, 1905.

NOTICES TO MARINERS.

THE following Notices are published for general information.

W. A. INGLIS,
Secretary, Marine Department.

CALCUTTA, *the 10th June 1905.*

AUSTRALIA.

Regulations regarding Target practice.

No. 189 (first publication).—The British Admiralty has given notice (No. 372 of 1905) that information has been received from the Government of the State of Victoria that The Commonwealth Defence Act, 1903, part 6, contains the following sections:—

71. The officer in charge of any artillery or rifle range may stop all traffic during artillery or rifle practice on any road or waterway crossing the line of fire, or in dangerous proximity thereto.

72. No ships, boats, or persons shall come, or remain within the prescribed distance of any ship, battery, gun, or person engaged in artillery or rifle practice, or shall remain in any position so as to obstruct such practice.

The Defence Authorities have also given Notice that all forts from which practice is carried on will fly a red flag from the masthead of the flagstaff. All ships and boats should be kept at a distance of at least 800 yards to the left and one mile to the right of the line of fire from a distance of 6,000 yards from the battery in accordance with part 6, No. 20, of the above Act.

This Notice affects the following Admiralty Chart:—Australia Directory, vols. I, II, and III, chapter I.

AUSTRALIA, SOUTH—PORT ADELAIDE RIVER.

Decreased depths in approach.

No. 190 (first publication).—The British Admiralty has given notice (No. 373 of 1905) that recent soundings show that the depths in the vicinity of the soundings of 4 fathoms shown on the Chart at a distance of 13 cables N. 33° W. from Wonga shoal light-house have decreased by about 6 inches. A note to this effect has been placed on the Charts. Vessels of deep draught should give it a wide berth when near low water.

Approximate position, lat. 34° 49′ S., long. 138° 26′ E.

(*Variation 5° Easterly in 1905.*)

This Notice affects the following Admiralty Chart:—Port Adelaide, No. 1752: Also Australia Directory, Vol. I, 1897, page 326.

AUSTRALIA, SOUTH—Spencer Gulf.

Germein bay, Port Pirie approach—Beacon established.

Secret rock—Buoy established.

No. 191 (first publication).—The British Admiralty has given notice (No. 375 of 1905) that the following beacon and buoy have been established to mark the undermentioned shoals in Spencer gulf:—

Germein bay.—The three feet shoal, situated at a distance of $6\frac{1}{10}$ miles N. 8° W. from the northern point of Jarrold point, has been marked by a black pile beacon, surmounted by a circular-shaped red topmark, erected in the centre of the shoal.

Approximate position, lat. 33° 9½′ S., long. 137° 48½′ E.

Also, that Secret rock in the northern approach to port Lincoln has been marked by a black buoy, surmounted by a staff and diamond-shaped top-mark, moored in a depth of 18 feet on its eastern edge.

Approximate position, lat. 34° 31½′ S., long. 136° 7½′ E.

(*Variation 5° Easterly in 1905.*)

This Notice affects the following Admiralty Charts:—St. Vincent and Spencer gulfs, No. 2389b; Wood point to Lowly point, No. 403. Also, Australia Directory, Vol. I, 1897, pages 254, 199; and Supplement, 1900, page 13.

EASTERN ARCHIPELAGO—Sumatra, West coast.

Pulo Marak.—Non-existence of bank.

No. 192 (first publication).—The British Admiralty has given notice (No. 378 of 1905) that the bank of 6 fathoms shown on the charts at a distance of 6 cables S. 73° W. from Ujong Sarang, Burung, Pulo Marak, has been erroneously placed in that position, and does not exist; it should therefore be expunged from the charts.

Approximate position, lat. 1° 12¾′ S., long. 100° 19′ E.

(*Variation Nil in 1905.*)

The Notice affects the following Admiralty Chart:—Ujong Masang to Ujong Indrapura, No. 709: Also, China Sea Directory, vol. I, 1896, page 297; and Supplement, 1899, page 20.

EASTERN ARCHIPELAGO—Sumatra, north coast.

Jambu Ayer or Diamond point. Light established.

No. 193 (first publication).—With reference to Notice to Marines No. 123, dated the 15th April 1905, issued by this office, the British Admiralty has given notice No. 380 of 1905 that a *white flashing* light *every five seconds*, elevated 87 feet above high water, and visible in clear weather from a distance of 15 miles, has been established in a screw pile structure, erected in a depth of 9 feet on the sand spit projecting from Jambu Ayer or Diamond point. The light is of the 4th order, the duration of the flash being under one-tenth of a second.

Approximate position, on Chart 219, lat. 5° 16¾′ N., long. 97° 29½′ E.

This Notice affects the following Admiralty Charts:—Bay of Bengal, No. 70; Bassein river to Pulo Penang, No. 830; Acheh head to Tyingkok bay, No. 2760; Malacca strait, No. 1355; Acheh head to Diamond point, No. 219; Diamond point to Pulo Berhala, No. 1353: also List of Lights, Part VI, 1905, page 63; and China Sea Directory, Vol. I, 1896, page 65.

BRITISH EMPIRE.

Caution when approaching British ports.

No. 194 (first publication).—The British Admiralty has given notice (No 381 of 1905) that The Lords Commissioners of the Admiralty having taken into consideration the fact that circumstances may arise in which it might be necessary on account of periodical exercises, manœuvres, or otherwise, to forbid all entrance to the naval ports at night, this is to give Notice that on approaching the shores of Great Britain, or any British dependency, if search-lights are observed to be in constant operation, the naval harbours should be approached with great caution, as it may be apprehended that obstructions may exist outside the port, or that the entrances may altogether be closed, and the examination service may be in force.

To signify that an entrance is closed, three *red* vertical lights will be exhibited in some conspicuous position in or near the approach to a port, and as far as possible Notice of the act will be given by "look-out" vessels in the offing.

JAPAN—KOREA STRAIT—TSU SIMA

Oguchi Sao Zaki Mitsu shima—Rocks in the vicinity.

No. 195 (first publication).—The British Admiralty has given notice (No. 383 of 1905) of the existence of the undermentioned rocks in the following position off Tsu sima :—

a. OGUCHI, IMA HARU BAY. A rock, with a depth of 4½ fathoms over it, situated at a distance of 5¾ cables N. 70° E. from Observatory rock. This rock has been marked on its northern side by a red conical buoy surmounted by a triangular topmark.

A rock, with a depth of 4½ fathoms over it, situated at a distance of 5½ cables N. 75° E. from Observatory rock. This rock has been marked by a red cask-buoy surmounted by a triangular topmark.

The depth on Naku zone immediately to the westward of the above rocks is 3¾ fathoms, not 4½ fathoms, as shown on the Charts.

Approximate position, Observatory rock, lat. 34° 19′ N., long. 129° 13½′ E.

b. SAO ZAKI A rock, with a depth of 4 fathoms over it, to the northward of Sao zaki, situated in a position from which the western extremity of Sao zaki bears S 58° W., distant 8½ cables, and the 965 feet hill S. 47° E.

Approximate position, lat. 34° 39¾′ N., long 129° 20′ E.

At a distance of a quarter of a cable to the northward of this rock there is another head with a depth of 4½ fathoms over it.

c TOYO WAN. A rock, with a depth of 2¾ fathoms over it, is situated in the approach to Toyo wan, north end of Tsu sima, in a position from which Mitsu shima light bears N. 48° W., distant $1\frac{9}{10}$ miles, and Kajiga zone ⋀S. 29° W.

Approximate position, lat. 34° 42¾′ N., long 129° 28½′ E.

There is a rocky patch, with a depth of 3½ fathoms over it, situated at a distance of $1\frac{9}{10}$ cables N. 41° E from this rock ; the ground between these two heads is foul.

(*Variation 4° Westerly in 1905.*)

This notice affects the following Admiralty Chart :—Western coasts of Kiusiu, etc., No. 358 ; Korean archipelago, No. 104 ; Fusan harbour to port Hamilton, No. 3366 ; Tsu sima, No. 2385 ; Tsu sima sound No. 2710 : Also Sailing Directions for Japan 1904, pages 123, 122, 124.

JAPAN—HONSHU—RIKUOKU GULF.

Amori.—Wreck in anchorage.

No. 196 (first publication).—The British Admiralty has given notice (No. 384 of 1905) that the wreck of the S.S. *Chitose Maru* with two masts above water lies sunk in Aomori anchorage, in a position from which the pier end bears S. 11° E., distant 2½ cables, and the north-western angle of the railway station wharf N. 87° W. The wreck is marked by a red flag by day and a *red fixed* light by night.

Approximate position, lat. 40° 50½′ N., long. 140° 44¾′ E.

(*Variation 6° Westerly in 1905.*)

This notice affects the following Admiralty Chart :—Plan of Aomori anchorage on Chart No. 101 : Also, Sailing Directions for Japan, 1904, page 687.

JAPAN—NAIKI (INLAND SEA).

Shimonoseki strait (Simonoseki) strait—Buoyage altered.

No. 197 (first publication).—The British Admiralty has given notice (No. 387 of 1905) that in the course of a few days the following alterations would be made in the buoyage of Simonoseki strait.

Light buoys established.

Eastern entrance :—

a. A black light-buoy, marked "Manjushima," and exhibiting a *white fixed* light, would be established on the northern side of the eastern entrance, in a position from which the eastern extremity of Manjushima bears N. 11° W., distant 3½ cables, and Kushi zaki N. 85° W.

b. The red conical buoy on the south-eastern edge of the Naka no su, situated 10½ cables N. 25° E. from He saki light, would be replaced by a red light-buoy marked "Naka no su East No. 2," exhibiting a *red occulting* light *every six seconds*, thus :—light, *four seconds ;* eclipse, *two seconds.*

c. The light-buoy on the north-eastern end of the Naka no su, situated 13 cables N. 27° E. from He saki lighthouse, would be marked "Naka no su East No. 1."

d. The black conical buoy, near the west end of Naka no su, situated at a distance of 13 cables N. 44° W. from He saki light, would be replaced by a black light-buoy exhibiting a *white fixed* light.

e. The red conical buoy marking Tobigasu, situated at a distance of 11¾ cables N. 42° W. from He saki light, would be replaced by a red light-buoy, exhibiting a *white occulting* light *every six seconds*, thus.—light, *four seconds*; eclipse, *two seconds*.

f. A black light-buoy, marked "Kanabuse," and exhibiting a *red fixed* light, would be established in a position from which Kanabuse beacon light bears South, distant 3¼ cables, and Dan no ura light S. 66° W.

g. The can buoy marking the south-west end of Moji shoal, situated at a distance of 5 cables S. 23° E. from the observation spot Simonoseki, would be replaced by a light-buoy painted in black and white horizontal bands and exhibiting a *red occulting* light *every six seconds*, thus:— light, *four seconds*; eclipse, *two seconds*.

Approximate position, He saki light, lat. 33° 57½′ N., long. 131° 1′ E.

h. A black light-buoy, marked "Ganryu jima," would be established in a position from which the south-eastern extremity of Ganryu jima bears S. 45 W., distant 2¼ cables, and Hane ishi N. 37° W.

Approximate position, lat. 33° 56¼′ N, long. 130° 56′ E.

Western entrance:—

a. The red conical buoy marking Ozo ne, situated at a distance of 1¾ miles S. 21° E. from Daiba hana light, would be replaced by a red light-buoy exhibiting a *red occulting* light *every six seconds*, thus:—light, *four seconds*; eclipse, *two seconds*.

b. The red conical buoy marking Kasa ze, situated at a distance of one mile S. 8° E. from Daiba hana light, would be replaced by a light-buoy exhibiting a *white fixed* light.

c. The red conical buoy marking Toridashi, situated at a distance of 6¼ cables S. 44° W. from Daiba hana light, would be replaced by a red light-buoy marked "Funase," exhibiting a *white occulting* light *every six seconds*, thus:—light, *four seconds*; eclipse, *two seconds*.

Approximate position, Daiba hana light, lat. 33° 57′ N., long. 130° 52¼′ E.

(*Variation 4° Westerly in 1905.*)

This Notice affects the following Admiralty Charts:—Hirado no seto to Simonoseki strait, No. 127; Simonoseki strait to Maruyama saki, No. 3225; Simonoseki strait, Nos. 532 and 1578; Moji ko, No. 3114; Also, Sailing Directions for Japan, 1904, pages 498, 499, 500, 502, 504, 505, 506.

NEW ZEALAND—North island, west coast.

Kaipara bar beacons—Amended positions given.

No. 198 (first publication).—With reference to Notice to Mariners No. 134, dated 1st May 1905, issued by this office, the British Admiralty has given further notice (No. 395 of 1905) that the two beacons erected on the North Head, Kaipara harbour, are painted black with white bull's eyes, and that the rear beacon is situated at a distance of 5 cables N. 59° E., and the front beacon at a distance of half a cable S. 45° E. from the light-house and not in the positions described in the above Notice. These beacons in line N. 52° E. lead over the bar in a depth of 4½ fathoms at low-water springs.

Approximate position of light-house, lat. 36° 23′ S., long. 174° 8½′ E.

(*Variation 13° Westerly in 1905.*)

This Notice affects the following Admiralty Chart:—Kaipara harbour, No. 2614: Also, New Zealand Pilot, 1901, page 244.

INDIA, WEST—Bombay harbour.

Cross island reef—Beacon erected.

No. 199 (first publication).—The British Admiralty has given notice (No. 400 of 1905) that a stone cylindrical beacon, painted red, elevated about 13 feet above high water, has been erected on Cross island reef in a position from which South channel beacon bears S. 70° W., distant 360 yards, and Cross island flagstaff N. 14° E.

Approximate position, lat. 18° 56½′ N., long. 72° 51½′ E.

(*Variation Nil in 1905.*)

This Notice affects the following Admiralty Chart :—Bombay harbour, No. 2681; port of Bombay, No. 655: Also, West Coast of Hindustan Pilot, 1898, page 201; and Supplement, 1903, page 15.

JAPAN—Honshu (Nipon)—East coast.

Oginohama Ro (Sendai) light—Arc of visibility.

No. 200 (first publication).—With reference to Notice to Mariners No. 158, dated 14th May 1904, issued by this office, the British Admiralty has given further notice (No. 401 of 1905) that, on and after the 25th March 1905, the arc of visibility of the *red fixed* light on Kitsune ana Saki, Oginohama, would be altered to show from the bearing of S. 35° E., through east and north, to S. 55° W.

Approximate position, lat. 38° 22½′ N., long. 141° 27′ E.

(*Variation 4° Westerly in* 1905.)

This Notice affects the following Admiralty Chart :—Plan of Oginohama on Chart No. 3216: Also, List of Lights, Part VI, 1905, No 1017; and Sailing directions for Japan, &c., 1904, page 393.

BAY OF BENGAL—Burma coast.

Akyab harbour—Lower Spit buoy replaced.

No. 201 (first publication).—With reference to Notice to Mariners No. 186, dated the 3rd June, issued by this office, a further telegraphic communication has been received from the Port Officer, Akyab, stating that the Lower Spit buoy has been replaced in position.

BAY OF BENGAL—Coromandel coast.

Ammapatam and Tondi ports—Buoys removed.

No. 202 (first publication).—The Presidency Port Officer, Madras, has given notice (No. 20 of 1905) that the Buoys marking the anchorages of the Ammapatam and Tondi ports will be removed from the 1st August 1905 as they are no longer required.

INDIA, WEST—Burma coast.

Murdeshwar—Date of removal of the Dart Rock buoy.

No. 203 (first publication).—With reference to Notice to Mariners No. 187, dated the 3rd June, issued by this Office, the Bombay Government has given further notice (No. 52 of 1905) that the Dart Rock buoy off Murdeshwar was removed for the South-West Monsoon on the 15th May 1905.

EASTERN ARCHIPELAGO—Java, north coast.

Korowelang—Rock buoy to be replaced by light buoy.

No. 176 (second publication).—The British Admiralty has given notice (No. 342 of 1905) that the red conical buoy surmounted by a ball, marking Korowelang rock, will be replaced by a light buoy exhibiting a *white occulting* light *every twenty seconds*, thus :—light, *ten seconds*; eclipse, *ten seconds*.

Approximate position, lat. 6° 48′ S., long. 110° 10′ E.

Further notice will be given when this alteration has been made.

This Notice affects the following Admiralty Chart :—Java, No. 1653: Also, Eastern Archipelago, Part II, 1904, page 106.

PACIFIC OCEAN—New Guinea, south coast—Aru islands—Dobbo harbour.

Tanjong Ular—Intended light.

No. 177 (second publication) —The British Admiralty has given notice (No. 343 of 1905), that it is intended to establish a *white group occulting* light showing groups of three eclipses *every thirty seconds*, thus:— light, *fifteen seconds;* eclipse, *three seconds;* light, *three seconds;* eclipse, *three seconds;* light, *three seconds;* eclipse, *three seconds* on Tanjong Ular, the north-western end of Wammer island, at the entrance to Dobbo harbour: the light, which will be of the 4th order, will be elevated 72 feet above high water, visible in clear weather from a distance of 14 miles and shown from an open ironwork support 42 feet high painted white.

Approximate position on plan on Chart No. 1460, lat. 5° 45′ S., long. 134° 11′ E.

Further notice will be given when this light has been established.

This Notice affects the following Admiralty Charts:—Eastern Archipelago, No. 942b: Australia, No. 2759a; Aru islands, No. 470; Dobbo harbour on No. 1460: Also, List of Lights, Part VI, 1905, page 87; and Eastern Archipelago, Part I, 1902, page 478.

EASTERN ARCHIPELAGO—Sumatra, west coast—Sambat bay.

Tanjong Bandar (Bundar)—Intended light.

No. 178 (second publication).—The British Admiralty has given notice (No. 344 of 1905) that it is intended to establish a *white group occulting* light showing groups of three occultations *every thirty seconds*, thus:—light, *fifteen seconds;* eclipse, *three seconds;* light, *three seconds;* eclipse, *three seconds;* light, *three seconds;* eclipse, *three seconds*, on Tanjong Bandar, Sambat bay: the light, which will be of the 4th order, will be elevated 49 feet above high water, visible in clear weather from a distance of 12 miles and shown from an open ironwork frame support, 42 feet high and painted white.

Approximate position, lat. 4° 49′ S., long. 103° 20′ E.

Further notice will be given when this light has been established.

This Notice affects the following Admiralty Charts:—Eastern Archipelago, No. 941a; China Sea, No 1263; Tyingkok islands to Sunda strait, No 2761; plan of Sambat bay on Chart No. 866: Also, List of Lights, Part VI, 1905 page 75; and China Sea Directory, Vol. I, 1896, page 314.

EASTERN ARCHIPELAGO—Sumatra, west coast.

Melabu, Tanjong Karang—Intended light.

No. 179 (second publication).—The British Admiralty has given notice (No. 345 of 1905) that it is intended to establish *a white group occulting* light showing groups of three occultations *every thirty seconds*, thus:—light, *fifteen seconds;* eclipse, *three seconds;* light, *three seconds;* eclipse, *three seconds;* light, *three seconds;* eclipse, *three seconds*, on Tanjong Karang, Melabu: the light, which will be of the 4th order, will be elevated 49 feet above high water, visible in clear weather from a distance of 12 miles, and shown from an open ironwork frame support, 42 feet high and painted white.

Approximate position, lat. 4° 7¾′ N., long. 96° 7′ E.

Further notice will be given when this light has been established.

This Notice affects the following Admiralty Charts:—Eastern Archipelago, No. 941a; China Sea, No. 1263; Acheh head to Tyingkok bay, with plan, No. 2760: Also, List of Lights, Part VI, 1905, page 75; and China Sea Directory, Vol. I, 1896, page 266.

BAY OF BENGAL—Straits Settlement and Malay peninsula.

Singapore—Standard Time—Time-balls altered.

No. 180 (second publication).—The British Admiralty has given notice (No. 346 of 1905) that on and after 1st June 1905 Standard time of the 105th meridian of East longitude will be adopted in the Straits Settlement and the Federated States in the Malay peninsula.

The time-balls at Fort Canning and Pulo Brani will consequently be dropped at 1ʰ 0ᵐ 0 P.M. Standard time of the 105th meridian, or 0ʰ 55ᵐ 25·1ˢ P.M. Singapore Observatory time, corresponding to 18ʰ 0ᵐ 0 Greenwich mean time.

Approximate position, lat. 1° 17′ N., long. 103° 51′ E.

This Notice affects the following Admiralty Charts:—Singapore road, No. 1995; Keppel harbour, No. 2023: Also, List of Time Signals, 1904, Nos. 35 and 36; and China Sea Directory, Vol. I, 1896, page 221.

BAY OF BENGAL—ANDAMAN ISLANDS.

Port Blair—Leading lights established.

No. 181 (second publication).—The British Admiralty has given notice (No. 347 of 1905) that the undermentioned *white fixed* leading lights were established in port Blair:—

(*a*) ATLANTA POINT.—A front light, elevated 70 feet above high water, has been erected on this point in a position from which the Port office jetty on Ross island bears N. 81° E. distance $8\frac{3}{10}$ cables, and the eastern extremity of Perseverance point N. 4° W.

The rear light is elevated 144 feet above high water, and is situated at a distance of $1\frac{1}{2}$ cables S. 35° W. from the front light. The light power of the lights is about 70 candles. These lights in line S. 35° W. lead into the harbour.

(*b*) SOUTH POINT.—A front light, elevated 7 feet above high water, has been established on the end of the pier at this point, situated 7 cables S. 22° W. from the Port office jetty. The rear light is elevated 40 feet above high water, and situated at a distance of one cable S. 11° E. from the front light. The light power of the lights is about 35 candles. These two lights in line S. 11° E. lead from the line of the Atlanta point lights to the anchorage off Ross island.

All the above lights are exhibited from towers about 7 feet high and painted white.

Approximate position of Port office jetty, lat. 11° 40½′ N., long. 92° 46½′ E.

(*Variation Nil in 1905.*)

This Notice affects the following Admiralty Chart:—Port Blair, No. 514: Also, List of Lights, Part VI, 1905, page 61; and Bay of Bengal Pilot, 1901, page 311.

EASTERN ARCHIPELAGO—SUMATRA, NORTH-EAST COAST.

Bedagei—Lights discontinued.

No. 182 (second publication).—The British Admiralty has given notice (No. 360 of 1905) that the two white fixed vertical lights formerly exhibited on the south side of the Bedagei river entrance have been permanently discontinued.

Approximate position, lat. 3° 30½′ N., long. 99° 13½′ E.

This Notice affects the following Admiralty Charts:—Malacca strait, No. 1355; and Diamond point to Pulo Berhala, No. 1353; Also, List of Lights, Part VI, 1905, No. 401; and China Sea Directory, Vol. I., 1896, page 86.

EASTERN ARCHIPELAGO—BORNEO, EAST COAST.

Balik Papan bay—No. 4 buoy to be replaced by light buoy.

No. 183 (second publication).—The British Admiralty has given notice (No. 364 of 1905) that the white conical buoy No. 4, on the eastern side of the entrance to the anchorage in Balik Papan bay, situated at distances of 7 cables S. 18° E. from Tokong, will be replaced by a light-buoy, painted white, exhibiting a *white occulting light every twenty seconds*, thus:—light, *ten seconds*; eclipse, *ten seconds*.

Approximate position of Tokong, lat. 1° 16′ S., long. 116° 48′ E.

(*Variation 2° Easterly in 1905.*)

This Notice affects the following Admiralty Chart:—Plan of Balik Papan bay on Chart No. 3031; Also, Eastern Archipelago, Part II, 1904, page 291.

PACIFIC OCEAN, SOUTH—SOLOMON ISLANDS—PAVUVU GROUP.

Victoria shoal—Existence of.

No. 184 (second publication).—The British Admiralty has given notice (No. 366 of 1905) of the existence of a shoal, on which a depth of 9 fathoms was obtained, to the southward of Pavuvu group, in a position from which the extremity of cape Marsh bore N. 14° W., distant $5\frac{7}{10}$ miles, and the southern extremity of Allacon island N. 70° E.

This danger, which has been named Victoria shoal, is about a cable in extent, and appeared to have much less water than that given above on its southern edge.

Approximate position, lat. 9° 10′ S., long. 158° 59′ E.

(*Variation 8° Easterly in 1905.*)

This Notice affects the following Admiralty Chart.—Plan of Pavuvu islands on Chart No. 2355: Also, Pacific Islands Vol. I., 1900, page 304.

CHINA SEA—FORMOSA (TAIWAN).

Kelung harbour, closed—Pescadores islands—State of siege proclaimed.

No. 185 (second publication).—The British Admiralty has given notice (No. 367 of 1905) that Kelung harbour, Formosa, which had recently been closed to foreign shipping during the daytime, can now be entered, provided notice is given beforehand to the Naval Mine Department.

Approximate position, lat. 25° 8′ N., long. 121° 45′ E.

Also, that the Japanese Government have published an Ordinance declaring that from 13th April 1905 the port of Makyu (Makung) in the Pescadores islands and the neighbouring seas would be in a state of siege.

Approximate position of Makung, lat. 23° 31′ N., long. 119° 34′ E.

This Notice affects the following Admiralty Charts:—Kelung harbour, No. 2618; Pescadores islands, Nos. 1961 and 1338; Also, China Sea Directory, Vol. III, 1904, pages 209 213.

BAY OF BENGAL—BURMA COAST.

Akyab harbour—Certain buoys adrift.

No. 186 (second publication).—Telegraphic communications have been received from the Port Officer, Akyab, stating that the Lower Spit buoy as well as Saunder's shoal buoy have sunk. They will be replaced as soon as possible.

INDIA, WEST—BOMBAY COAST

Alibag and Bhatkal—Buoys removed for the S.-W. Monsoon.

No. 187 (second publication).—The Bombay Government has given notice (No. 49 of 1905) that the buoys on the west coast from Alibag to Bhatkal will be removed for the south-west Monsoon after 15th May 1905.

The dates of the removal of the buoys will be notified hereafter.

INDIA, WEST—BOMBAY COAST.

Alleppey—Red and Black buoys removed.

No. 188 (second publication).—The Master Attendant at Alleppey has given notice dated the 20th May 1905 that the Red and Black buoys marking the anchorage at Alleppey have been removed and will probably be replaced about the 15th September 1905.

AUSTRALIA, SOUTH—GULF ST. VINCENT.

Port Adelaide river—Two Warping Beacons placed.

No. 171 (third publication).—The President of the Marine Board, Port Adelaide, has given notice (No 9 of 1905) that two Warping Beacons have been placed on the south side of the Jervois Bridge on the west bank of the river—one opposite the entrance to the Canal and the other near the Oyster Beds.

These Beacons are not for vessels to moor to, but for warping purposes only.

This affects Admiralty Chart No. 1750.

AUSTRALIA, SOUTH—GREAT AUSTRALIAN BIGHT.

Fowler's bay—An ordinary Jetty light exhibited.

No. 172 (third publication).—The President of the Marine Board, Port Adelaide, has given notice (No. 11 of 1905) that on and after April 22nd, 1905, an ordinary Jetty light will be exhibited from the end of Fowler's Bay Jetty.

This affects Admiralty Chart No. 1061.

AUSTRALIA—QUEENSLAND.

Port Douglas—Directions to enter the New Channel.

No. 173 (third publication).—With reference to Notice to Mariners No. 93, dated 24th March 1905, issued by this office, the Port Master, Brisbane, has given further notice (No. 3 of 1905) that the directions to enter the New Channel into Port Douglas state that the marks and lights bear in line N. E. by N. ½ N. and N. ½ E, respectively. These bearings from seaward should read S.W. by S. ½ S. and S. ½ W., respectively.

Australia Directory, vol. 2; Admiralty Chart No. 2924 (old).

INDIA, WEST—MALABAR COAST.

Talayi—Small spherical buoy removed for overhaul.

No. 174 (third publication).—The Presidency Port Officer, Madras, has given notice (No. 19 of 1905) that the small spherical buoy marking the pinnacle rock off the Sub-Port of Talayi will be removed on the 25th May 1905 for overhaul, and will be replaced about the 1st October 1905, when the working season again commences.

BAY OF BENGAL—CHITTAGONG COAST.

Kurnafuli river—Depth of water in the channels.

No. 175 (third publication).—The Port Officer, Chittagong, has given notice that the following depth of water was found in the river channels by soundings taken on the 24th May and reduced to zero:—

	Ft.	In.
Track No. 1—Outer bar—		
Disc on diamond	14	0
Track No. 2—Inner bar—		
Disc on diamond	11	6
Batten beacon on pillar	12	0
Track No. 3—		
Triangle on cross and ball	16	6
Track No. 4—Guptakhally crossing—		
Tripod on diamond	18	0
New mark—		
Cross and ball on with diamond passing close to Gupta point ...	21	6

N.B.—There is no doubt that Gupta point is being washed away and that the shoal on the opposite bank is extending.

REGISTERED No. C209.]

No. 24 of 1905.

SUPPLEMENT TO
The Calcutta Gazette.

WEDNESDAY, JUNE 14, 1905.

OFFICIAL PAPERS.

[Non-Subscribers to the GAZETTE *may receive the* SUPPLEMENT *separately on payment of five rupees per annum if delivered in Calcutta, or seven rupees and eight annas if sent by post.]*

CONTENTS.

	Page.
RESOLUTION on the Triennial Report on the Administration of the Registration Department in Bengal for the years 1902, 1903 and 1904	865
Liberality of Raja Janoki Ballav Sen, of Dimla, in the district of Rangpur	868
Weather and Crop Report for the week ending the 12th June 1905	869
Average Wholesale Prices-current for the year ending 31st March 1905	873
Prices-current (retail and wholesale) of food-grains and salt in the head-quarters station bazars of the districts of Bengal on the 31st May 1905	876
CIRCULAR and Eastern Canals for the week ending Saturday the 10th June 1905	882
Results of the Meteorological Observations taken at the Alipore Observatory from 4th to 10th June 1905 ...	883
Abstract of the Results of Meteorological Observations taken at the Alipore Observatory in the month of May 1905	884
Vital Statistics of Districts and Towns in Bengal for the month of March 1905	885
East Indian Railway during the four weeks ending 25th March 1905	887
Weekly Return of Traffic Receipts on Indian Railways ...	889

RESOLUTION ON THE TRIENNIAL REPORT ON THE ADMINISTRATION OF THE REGISTRATION DEPARTMENT IN BENGAL FOR THE YEARS 1902, 1903, AND 1904.

No. 442P.—D.

RESOLUTION.

REGISTRATION.

Dated Darjeeling, the 8th June 1905.

READ—

The Triennial Report on the Administration of the Registration Department for the years 1902, 1903, and 1904.

Read also—

The Triennial Report on the Administration of the Registration Department for the years 1899-1900, 1900-1901, and 1901-1902 and the Resolution of Government recorded thereon.

The Statistical Returns for the years 1902 and 1903.

The present report, which reached Government on the prescribed date, has been prepared by Mr. Tarini Kumar Ghose, who was in charge of the Department throughout the triennial period. Since the publication of the last triennial report for the period ending the 31st March 1902, the number of statistical tables to be appended to the Registration Report has been reduced

from 8 to 4 under the orders contained in Home Department Resolution No. 2283—95, dated the 10th June 1903. The orders conveyed in Home Department letter No. 275, dated the 31st January 1905, further revising the forms on account of changes in the law introduced by Act VI of 1904 (an Act further to amend the Transfer of Property Act, 1882) could not be given effect to in the statements appended to the present report. The Inspector-General explains that the provisions of the Act are not yet generally known in the Province, that the Act received the assent of the Governor-General in Council after nearly two and-a-half months of the year had expired, that it has not yet had much effect on registrations, and that the orders were received too late to be given effect to without unduly delaying the report. The Lieutenant-Governor considers the reasons advanced by the Inspector-General sufficient to warrant the preparation of the statements appended to the present report in the old forms.

2. Since the receipt of the report, the sanction of the Secretary of State has been received in Home Department letter No. 1067, dated the 9th May 1905, to a scheme, originally submitted by the Inspector-General and slightly modified by the Government of India, for the complete reorganization of the Registration Department. There is every reason to hope that this scheme, which provides for the payment of salaries instead of commissions to Sub-Registrars and the grant of an increase of pay to their clerks (who will in future be paid entirely by Government), and under which service becomes pensionable, will result in increased efficiency at a moderate increase of cost, well justified by the growing profits of the Department. The other important changes that have taken place during the period under review are that (1) the Registration Report is for the calendar instead of the financial year, and (2) the whole of the registration receipts and expenditure has been made Provincial under the recent Provincial Contract: they were formerly divided between the Imperial and Provincial Governments in equal shares.

3. The progress in the operations of the Registration Department noticed in the last triennial Resolution was steadily maintained during the past triennium. In 1901-1902 442 offices were open for the registration of documents: the number has now risen to 457. Three new buildings were erected during the triennium for the registration offices at Chittagong, Suri, and Mymensingh. The yearly statements of receipts and expenditure have not shown much change from year to year during the triennium; but the total receipts for the period, and also the total expenditure, show a steady advance while the surplus is higher than it has ever been before. The Inspector-General has again omitted to include the receipts and expenses of his own office and that of the Registrar of Companies, Calcutta. It would be convenient for purposes of comparison if those figures were included in future reports.

4. The total number of compulsory and optional registrations affecting immoveable property, moveable property, wills and authorities to adopt, was larger than in any of the preceding triennial periods. Though there have been various local causes, *e.g.*, bad harvests, a good marriage year, the desire of landlords to forestall or discount the results of settlements by procuring the execution of documents binding their raiyats, etc., to account for this increase in some areas, yet it seems that in the main it is to be explained by growing familiarity with the law and the desire to take advantage of its benefits. The increase is most marked in the case of deeds the registration of which is compulsory. This class of documents will in consequence of the provisions of Act VI of 1904 show a still further increase in future years. On the other hand, owing to the provisions of Act V of 1903 (Chota Nagpur Tenancy Act) the number of registrations in Chota Nagpur decreased in a marked degree. The number of searches and applications for copies has steadily increased during the triennium, a fact which further illustrates the growing knowledge on the part of the people of the benefits of registration.

5. The increase noticed in the last triennial Resolution in the number of deeds of sale or exchange affecting property of the value of Rs. 100 and upwards, the registration of which is compulsory, was well maintained during the period under review, the number during the last year of the triennium being 136,947, the highest figure yet reached. The present figures support the interpretation put upon the increase noticed in 1902, that the value of land

having risen has brought into this category a number of petty holdings the value of which in former years would have been under Rs. 100. There is a very marked falling off during the triennium in the number of revenue-paying estates, shares in revenue-paying estates, revenue-free estates, and intermediate tenures transferred by registered deeds; but the purchase-money of these estates and tenures has risen considerably; furnishing further evidence of the rise in the price of landed property. The increase is common to nearly all districts, but is most marked in Calcutta; the rise in Dacca appears to be due to the greater importance of Dacca should Bengal be partitioned. The number of mahajan purchasers of the above classes of estates and tenures has remained fairly constant, showing that the landholders of the Province continue to hold their own.

6. In the Government Resolution of 1902 the large increase in the number of transactions relating to raiyati holdings with rights of occupancy was noticed. The period under review shows a still further increase, the total number of such transactions being 781,926, the highest figure on record, as compared with 658,943 in the preceding triennium. The number of mahajan purchasers has slightly decreased, while that of raiyats has increased considerably. The large increase in the number of raiyat purchasers calls for comment: in 1894-1895 the number of such purchasers was 109,806, in 1901-1902 it rose to 179,418, while at the end of 1904 it was 195,318, the proportion of raiyats to that of other purchasers being 73·79 against 72·89 in the preceding triennium. The fact that the percentage of raiyat purchasers has slightly increased seems to show that the general body of raiyats are at all events holding their own.

7. The increase in mortgages of property whether over or under Rs. 100 continued even before the passing of Act VI of 1904, and shows that mahajans are more and more requiring some tangible security instead of a mere note of hand. The number of perpetual leases registered under section 17, clause (*d*) of the Tenancy Act shows an increase: the figures are 272,519 in 1896—1899, 277,424 in 1899—1902, and 287,197 in the last triennium. The number of such leases is largest in Chittagong, Jessore, the 24-Parganas, Backergunge, Faridpur and Khulna. The fact that the stamp duty on this class of documents has been enhanced has not interfered with their execution.

8. The total number of registrations under sections 12 and 18 of the Tenancy Act and the amount of the landlords' fees realized have not varied much during the triennial period under review. The system of levying landlords' fees under these sections of the Act continues to be unpopular and a change in the system is under contemplation. The remaining operations of the Department do not call for special remark.

9. The Lieutenant-Governor is pleased to see that greater activity has been shown generally in the work of inspection by the officers of the Department. The total number of inspections made during 1904 by the Inspector General and the Inspectors of the Department was 355 against 314 during the last year of the preceding triennium. In addition District Registrars and Sub-Registrars made 967 inspections in 1904. The Inspector-General has overlooked the instructions in paragraph 7 of the last triennial Resolution on the subject, and he is again requested to show in future reports the number of inspections made by each class of inspecting officers and how many of them were second inspections of the same office by the Inspectors. The Lieutenant-Governor attaches much importance to the regular and periodical inspection by the Inspector-General and the Inspectors of as many different offices as possible.

ORDER.—Ordered that a copy of this Resolution be forwarded to the Inspector-General of Registration for information and guidance.

Ordered also that a copy of the Resolution, together with a copy of the Report, be submitted to the Government of India in the Home Department for information.

Ordered also that the Resolution be published in the *Calcutta Gazette*.

By order of the Lieutenant-Governor of Bengal,

R. W. CARLYLE,

Offg. Chief Secy. to the Govt. of Bengal.

LIBERALITY OF RAJA JANOKI BALLAV SEN, OF DIMLA, IN THE DISTRICT OF RANGPUR.

No. 1106T.—R., dated Darjeeling, the 8th June 1905.

From—R. W. CARLYLE, Esq., C.I.E., Offg. Chief Secretary to the Government of Bengal, Revenue Department,

To—The Commissioner of the Rajshahi Division.

I AM directed to acknowledge the receipt of your letter No. 175Rct., dated the 8th May 1905, in which you report that Raja Janoki Ballav Sen, of Dimla, in the district of Rangpur, has paid a donation of Rs. 8,000 towards the establishment of the Rangpur Agricultural Demonstration Farm.

2. In reply, I am to request that you will be so good as to convey to the donor an expression of the Lieutenant-Governor's appreciation of his liberality and public spirit. This letter will be published in the *Calcutta Gazette*.

WEATHER AND CROP REPORT.

For the week ending the 12th June 1905.

Burdwan.—Rainfall at Sadar 0·73, Kalna 0·04, Katwa 0·44, Raniganj 2·24. Ploughing continues. Sowing of winter rice has begun, Weeding of jute, sugarcane and early rice commenced. Fodder sufficient. Scarcity of water reported from Asansol. No cattle-disease. Common rice sells as follows :—

	Srs.	ch.	
Sadar	13	12	per rupee.
Kalna	12	5	
Katwa	13	12	
Raniganj	13	4	

Birbhum.—Rainfall at Sadar 1·51, Rampur Hât 1·41. Weather sultry. Sowing of paddy continues. Sugarcane doing well. Fodder and water sufficient. Common rice sells as follows :—

	Srs.	ch.	
Sadar	14	4	per rupee.
Rampur Hât	15	0	

Bankura.—Rainfall at Sadar nil, Vishnupur 0·28. Weather very hot. Sowing of early rice finished and that of winter rice commenced. Rain urgently wanted for both. No cattle-disease. Fodder and water sufficient. Common rice sells as follows :—

	Srs.	ch.	
Sadar	14	0	per rupee.
Vishnupur	15	0	

Midnapore.—Rainfall at Sadar 0·53, Contai 0·01, Tamluk 1·08, Ghatal 0 85. Sowing of early rice nearly finished. Summer rice being threshed. Ploughing and sowing of winter rice continue. Sugarcane thriving. No cattle-disease. Fodder and water sufficient. Common rice sells as follows :—

	Srs.	ch.	
Sadar	15	0	per rupee.
Contai	18	0	
Tamluk	13	8	
Ghatal	14	0	

Hooghly.—Rainfall at Sadar 0·47, Arambagh 0·70, Serampore 0·39. Weather very hot. Winter rice being sown. Weeding of early rice and jute going on. No cattle-disease. Fodder and water sufficient. Common rice sells as follows :—

	Srs.	ch.	
Sadar	10	0	per rupee.
Arambagh	13	3	
Serampore	11	1	

Howrah.—Rainfall at Sadar 0·24. Weather excessively hot. Rain wanted. Sowing of jute and winter rice still going on. Sugarcane thriving. Fodder and water-supply sufficient. Common rice sells as follows :—

	Srs.	ch.	
Sadar	13	0	per rupee.
Uluberia	13	8	

24-Parganas.—Rainfall at Sadar 0·12, Barasat 0 91, Barrackpore 0·42, Basirhat 0·06, Diamond Harbour report not received. Weather sultry. Sowing of early rice and jute finished. Weeding still continues. State of standing crops fair. Prospects good. Condition of cattle good. Supply of fodder and water sufficient. Common rice sells at 12 seers per rupee.

Nadia.—Rainfall at Sadar 1·27, Kushtia 1·88, Chuadanga 1·47, Meherpur 0·39, Ranaghat 0·97. Weather very hot. Prospects of early rice good. Sowing of jute going on. Fodder and water sufficient. No cattle-disease. Common rice sells as follows :—

	Srs.	ch.	
Sadar	12	0	per rupee.
Kushtia	14	0	
Meherpur	10	0	
Chuadanga	12	0	
Ranaghat	13	0	

Murshidabad.—Rainfall at Sadar 0·24, Lalbagh 0 99, Jangipur 1·27, Kandi 1·42. Weather hot. Prospect of early rice good. Jute and sugarcane doing well in Lalbagh and Jangipur. Winter rice being sown in places. No cattle-disease. Fodder and water plentiful. Common rice sells as follows :—

	Srs.	ch.	
Sadar	13	0	per rupee.
Kandi	14	0	
Jangipur	14	0	
Lalbagh	12	4	

Jessore.—Rainfall at Sadar 0·93, Jhenida 1·01, Magura 1·23, Narail 1·16, Bangaon 0·97. Weather seasonable. Prospect of crops good. Fodder and water sufficient. Common rice sells as follows:—

	Srs.	ch.	
Sadar	14	0	per rupee.
Jhenida	13	0	
Magura	12	8	
Narail	13	5	
Bangaon	13	5	

Khulna.—Rainfall at Sadar 0·57, Bagerhat 2·28, Satkhira 0·38. Weather intensely hot. Sowing of autumn and winter rice estimated at 13 and 15 per cent. respectively. Cattle disease reported from Morelganj. Fodder and water sufficient. Common rice sells as follows:—

	Srs.	ch.	
Sadar	14	8	per rupee.
Bagerhat	15	0	
Satkhira	13	0	

Rajshahi.—Rainfall at Sadar ·98, Nator ·62, Naugaon 1·13. Heat excessive. Bright sun-shine. All crops promising. Sowing and weeding of paddy continues. Fodder and water sufficient. Common rice sells as follows:—

	Srs.	ch.	
Sadar	13	0	per rupee.
Nator	14	12	
Naugaon	13	8	

Dinajpur.—Rainfall at Sadar 0·03, Thakurgaon ·86, Balurghat nil. Weather seasonable. Weeding of jute and *bhadoi* going on. No cattle-disease. Fodder and drinking-water sufficient. Common rice sells as follows:—

	Srs.	ch.	
Sadar	14	8	per rupee.
Balurghat	14	0	
Thakurgaon	13	0	

Jalpaiguri.—Rainfall 6·77. Weather hot and cloudy. Weeding of autumn rice and jute going on. Lands are being prepared for winter rice. Fodder and water sufficient. Common rice sells at 13 seers per rupee.

Darjeeling.—Rainfall at Sadar 0·46. Weather seasonable. *Hills.*—Early rice, maize, potato and *marua* doing well. *Terai*—Condition of jute and autumn crops good. Coarse rice sells as follows:—

	Srs.	ch.	
Hills	9	0	per rupee.
Terai	13	0	

Maize sells at Darjeeling and Kalimpong at 11 seers per rupee.

Rangpur.—Rainfall at Sadar 0·11, Gaibanda 1·89, Kurigram 1·39, Nilphamari 0·93. Weeding of jute going on. Transplantation of winter rice commenced. Prospects of standing crops fair. Common rice sells at 12 seers per rupee everywhere.

Bogra.—Rainfall at Sadar 3·04. Fall general. Weather very hot and occasionally cloudy. Weeding of early rice and jute and cultivation for winter rice going on. Condition of jute fair except in some low lands where the plants are submerged. Fodder and water sufficient. Common rice sells at 13½ seers per rupee.

Pabna.—Rainfall at Sadar 1·95, Sirajganj 2·14. Weather partially cloudy and very hot. Prospects of standing crops fair. Weeding of paddy and jute continues. No cattle-disease. Fodder and water sufficient. Common rice sells at 12 seers per rupee.

Dacca—Rainfall at Sadar 1·68. Fall general. Prospects of crops good. Weather seasonable. Fodder available. No cattle-disease except at Manikganj. Common rice sells as follows:—

	Srs.	ch.	
Sadar	14	0	per rupee.
Manikganj	12	0	
Munshiganj	13	0	
Narayanganj	13	0	

Mymensingh.—Rainfall at Sadar 1·14, Jamalpur 1·41, Kishorganj 3·98, Netrakona 2·10, Tangail 2·78. Weather seasonable. Prospects of standing crops good. Weeding of early rice and jute and transplantation of winter rice going on. Fodder and water ample. No cattle-disease. Common rice sells as follows:—

	Srs.	ch.	
Sadar	13	8	per rupee.
Jamalpur	15	0	
Kishorganj	14	2	
Netrakona	16	12	
Tangail	13	0	

Faridpur.—Rainfall at Sadar 1·43, Goalundo 0·78, Weather very hot. Prospects of crops good. Fodder and water sufficient. Common rice selling at 12 seers a rupee.

Backergunge.—Rainfall at Sadar 1·27. Fall general. Weather fine and hot. No cattle-disease. Fodder sufficient. Common rice sells at 13½ seers per rupee.

Tippera.—Rainfall at Sadar 1·30, Brahmanbaria 4·98, Chandpur 2·25. Weather seasonable. Prospect of crops fair. Sowing of paddy completed in Brahmanbaria. Fodder and water sufficient. No cattle-disease. Common rice sells as follows :—

	Srs.	ch.	
Sadar	12	8	per rupee.
Brahmanbaria	14	8	
Chandpur	14	0	

Noakhali.—Rainfall at Sadar 1·97. Feni 5·23. Weather seasonable. Sowing of early rice still continues. Prospects fair in Sadar, good in Feni. Cattle-disease reported. Common rice sells as follows :—

	Srs.	ch.	
Sadar	12	0	per rupee.
Feni	15	0	

Chittagong.—Rainfall at Sadar 1·46. Cultivation of early rice going on. Weather hot and cloudy. Cattle-disease reported. Fodder and water sufficient. Common rice sells at 13 seers per rupee.

Chittagong Hill Tracts.—Rainfall 8·20. Weather excessively hot throughout the week. *Jum* paddy and cotton plants are thriving. Cattle-disease still continues. Common rice sells at 15 seers per rupee.

Patna.—Rainfall at Behar 0·05. Weather hot. Lands are being prepared for *bhadoi* sowing. *Cheena* and sugarcane doing well. Fodder and water sufficient. No cattle-disease. Common rice sells as follows :—

	Srs.	ch.	
Sadar	13	8	per rupee.
Barh	12	8	
Dinapore	12	0	

Gaya.—Rainfall nil. Weather very hot with west winds. Sugarcane doing well. Fodder and water for cattle sufficient. Common rice sells at 12 seers per rupee.

Shahabad.—Rainfall nil. Weather hot with west winds. Sugarcane being irrigated, and summar rice being harvested. Fodder and water abundant. Common rice sells at 14 seers per rupee at Sadar.

Saran.—Rainfall at Sadar nil, Sewan 0·25, Gopalganj 0·75. Weather hot. Sugarcane and *cheena* doing well. Land being prepared for *bhadoi* crops. Fodder and water sufficient. Common rice and maize selling at 12½ and 18 seers per rupee respectively at Sadar.

Champaran.—Rainfall at Sadar 1·72, Bettiah 2·18. Prospects of standing crops good. Preparation of land continues. Sowing of *bhadoi* and maize commenced in places. No cattle-disease. Fodder and water sufficient. Common rice sells at 14½ seers and maize at 21 seers per rupee.

Muzaffarpur.—Rainfall at Sadar 0·05, Hajipur nil, Sitamarhi 1·05. Weather hot and cloudy at times. Prospects of crops good. Sowing of *bhadoi* crops continues. Fodder and water sufficient. No cattle-disease. Common rice and maize sell at 12 and 17 seers per rupee respectively at Sadar.

Darbhanga.—Rainfall at Sadar 0·41, Samastipur 0·16, Madhubani 0·02. Weather hot. Sowing of *bhadoi* crops commenced in places Prospects of standing crops good. Fodder and water sufficient. No cattle-disease reported. Common rice sells as follows :—

	Srs.	ch.	
Sadar	14	4	per rupee.
Samastipur	13	8	
Madhubani	14	0	

Monghyr.—Rainfall at Sadar nil, Begusarai 1·88, Jamui 0·84. Weather hot. Sugarcane doing well. Lands being prepared for winter rice and seeds being sown. Fodder and water sufficient. No cattle-disease. Common rice sells as follows :—

	Srs.	ch.	
Sadar	12	8	per rupee.
Jamui	12	0	
Begusarai	12	0	

Bhagalpur.—Rainfall at Sadar 0·13, Banka nil, Madhipura 1·50, Supaul 0·15. Weather very hot with occasional west wind. Sugarcane doing well. Transplantation of winter rice going on. A few cases of cattle-disease reported from thanas Supaul and Protapganj in the Supaul subdivision. Fodder and water sufficient. Common rice sells as follows :—

	Srs.	ch.	
Sadar	14	0	per rupee.
Banka	15	0	
Madhipura	15	0	
Supaul	16	0	

Purnea.—Rainfall at Sadar 0·57, Kishanganj 0·15, Araria nil. Weeding of *bhadoi* paddy and jute continues. Lands being prepared for *aghani* rice. Condition of standing crops good. No cattle-disease. Fodder and water sufficient. Common rice sells as follows:—

	Srs.	ch.	
Sadar	11	8	per rupee.
Kishanganj	11	8	
Araria	13	0	

Malda.—Rainfall at Chanchal 1·19, Nawabganj 0·20, Gazole 0·60. Weather hot. Lands are being ploughed for winter rice. Autumn crops and jute doing well Summer rice being harvested. No cattle-disease. Fodder and water sufficient. Common rice sells at 11¼ seers per rupee.

Sonthal Parganas.—Rainfall at Dumka 0·75, Godda 1·15, Pakour 0·46. Weather hot. Sugarcane doing well. Sowing of winter paddy going on, but that of *makai* and *mandua* stopped for want of rain. Fodder and water sufficient. Common rice sells at 13 seers per rupee at Sadar.

Cuttack.—Rainfall at Sadar 0·51. Fall general. Weather seasonable. *Dalua* and tobacco being harvested Sugarcane growing. *Biali* and *saradh* being sown. Cattle-disease reported from Jajpur. Fodder and water sufficient. Common rice sells at Cuttack at 15¾ seers per rupee.

Balasore.—Rainfall at Sadar nil. Sowing of paddy has commenced. Sugarcane thriving well. No cattle-disease. Fodder and water sufficient Common rice sells as follows:—

	Srs.	ch.	
Sadar	16	0	per rupee.
Bhadrak	18	0	

Angul.—Rainfall at Sadar 0·21, Phulbani 2·04. Weather hot and cloudy. Fodder and water available. Common rice sells 18 seers per rupee at Sadar and Khondmals.

Puri.—Rainfall at Sadar and Khurda nil. Weather seasonable. *Dalua* and cotton being harvested. Sugarcane doing well. *Saradh* being sown. Condition of miscellaneous crops good. Fodder and water-supply sufficient. Common rice sells at 15¾ seers per rupee.

Hazaribagh.—Rainfall at Sadar nil. Weather hot. No cattle-disease reported. Fodder and water sufficient. Prices at Sadar are as follows:—

	Srs.	ch.	
Common rice	11	0	per rupee.
Mandua	19	8	
Indian-corn	15	0	

Ranchi.—Rainfall at Sadar 0·03. Weather seasonable. Ploughing continues. *Tora* paddy doing well. Cattle-disease reported from three thanas. Fodder and water sufficient. Common rice sells at Sadar at 12 seers per rupee.

Palamau.—Rainfall at Sadar 0·04. Weather very hot. Sugarcane doing well. Cattle-disease exists. Fodder and water available. Common rice sells at 12½ seers per rupee at Sadar.

Manbhum.—Rainfall at Sadar 0·52, Gobindpur 0·95. Weather seasonable. Prospects of crops good. Autumn rice, *mandua*, cotton and *arhar* are being sown. Fodder and water sufficient. Cattle-disease reported from Baghmundi and Topchanchi thanas. Common rice sells as follows:—

	Srs.	ch	
Sadar	13	0	per rupee.
Gobindpur	12	0	

Singhbhum.—Rainfall nil. Prospects of crops good. Sowing of paddy nearly finished Fodder and water sufficient. Common rice sells at 14 seers per rupee.

General Summary.—Rain is reported from every district except Gaya, Shahabad Balasore, Puri, Hazaribagh and Singhbhum. The fall was generally light except in parts of East and North Bengal, where it was heavy. Prospects of standing crops are generally good, but rain is needed in Bankura and the Sonthal Parganas. Cattle-disease is reported from ten districts. Fodder and water are generally sufficient. The price of common rice has risen in eight districts and fallen in three.

N. D. BEATSON BELL,

Offg. Director of the Dept. of Land Records and Agriculture, Bengal.

DEPT. OF LAND RECORDS AND AGRICULTURE, BENGAL,
The 13th June 1905.

THE following is published for general information.

R. W. CARLYLE,
Offg. Chief Secy. to the Govt. of Bengal.

The 10th June 1905.

AVERAGE WHOLESALE PRICES-CURRENT (per Maund) of Food-grains, Fire

No.	Marts.	Rice, best sort.	Common rice (*mota chaul*).	Wheat (*Triticum sativum*).	Barley (*Hordeum vulgare*).	Juar or cholum (*Sorghum vulgare*).	Bajra or cumbu (*Pennisetum typhoideum*).	Marua or ragi (*Eleusine coracana*).	Gram, chana, cholla, kadalay, or sunaga (*Cicer arietinum*).	Indian-corn or maize (*Zea Mays*).	Arhar dál or Thur Cadjan pea (*Cajanus Indicus*).	Linseed.	Mustard and rape seed.
1	2	3	4	5	6	7	8	9	10	11	12	13	14
		Rs. A. P.	Rs. A. P.	Rs. A. P.	Rs. A. P.	Rs. A. P.	Rs. A. P.	Rs. A. P.	Rs. A. P.	Rs. A. P.	Rs. A. P.	Rs. A. P.	Rs. A. P.
1	Calcutta ...	5 4 4	4 2 10	3 3 4	2 6 2	2 6 1 (c)	2 10 4	...	2 12 2	2 4 9 (e)	4 6 10	4 9 10	4 4 10
2	Burdwan ...	3 12 5	2 15 3	...	...	...	...	...	2 4 7	...	3 1 3	...	3 15 0
3	Midnapore	3 4 5	2 9 2	...	..	...	...	...	2 12 3	.	3 6 10	3 8 0	Black mustard 4 0 0 Rape seed 3 0 1
4	Pabna ...	6 5 10	2 9 3	2 5 7	...	...	...	...	2 6 1	...	3 5 1	3 8 2	4 1 4
5	Rangpur ...	3 12 11	2 14 10	3 4 4	...	...	...	...	2 6 2	...	3 6 9	...	3 7 3
6	Dacca ...	3 5 5	2 8 11	2 5 0	1 5 4	...	...	...	2 6 1	...	2 3 8	...	...
7	Chittagong	...	2 15 2	...	...	...	...	...	3 5 9	..	4 3 0	...	3 15 4
8	Patna ...	3 0 2	2 6 11	2 6 2	1 8 0	1 9 6 (d)	...	1 7 6 (g)	1 14 6	1 8 0	2 9 2	3 11 5	3 5 11
9	Muzaffarpur	5 0 0	2 10 1	2 10 2	1 7 7	...	...	1 8 8 (b)	2 0 6	1 8 5	2 8 6	...	...
10	Bhagalpur	3 13 0	2 11 6	2 8 2	1 11 10	...	...	...	2 1 2	1 10 10	2 12 2	3 13 0	Rape seed (a) 3 7 3 Mustard (a) 3 3 6
11	Cuttack ...	4 0 5	2 4 2	2 9 6	...	...	...	..	2 1 9	...	1 15 10	...	4 14 5
12	Ranchi ...	4 1 10	2 11 9	3 12 10	2 9 11	...	...	...	2 14 1	...	5 2 10	4 5 4	3 7 3

(a) Average of prices re
(b) Ditto ditto
(c) Ditto ditto
(d) Ditto ditto
(e) Ditto ditto
(g) Ditto ditto

DEPT. OF LAND RECORDS AND AGRICULTURE, BENGAL;

The 2nd June 1905.

etc., in the undermentioned Marts of Bengal for the year ending 31st March 1905.

Sugar, raw.	Cotton, cleaned.	Jute.	Ghi (clarified butter).	Tobacco leaf.	Hides (cow).	Grass.	Straw.	Jaar stalks.	Iron.	Firewood.	Salt.	Marts.
16	17	18	19	20	21	22	23	24	25	26	27	28
Rs. A. P.	Rs. A. P.	Rs. A. P.	Rs. A. P.	Rs. A. P.	Rs. A. P.	Rs. A. P.	Rs. A. P.	Rs. A. P.	Rs. A. P.	Rs. A. P.	Rs. A. P.	
					Per 100 pieces.						Panga.	
4 9 2	17 3 4	5 10 0	38 9 4	7 15 4	203 12 0	1 3 0	0 13 10	...	5 11 2	0 8 2	2 10 6	1. Calcutta.
4 15 2	23 6 8	...	32 14 0	...	...	...	0 11 7	...	...	0 5 11	Panga. 2 11 9	2. Burdwan.
5 0 11	25 3 8	...	33 13 0	Madhukhali. 6 4 1 Pulta. 8 11 1	Uncleaned. 2 13 1 Cleaned. 3 1 2	...	0 10 1	...	3 3 6	0 4 0	Panga. 2 13 8	3. Midnapore.
4 10 6	23 6 8	5 11 2	52 2 8	11 4 4	...	...	0 14 5	...	6 14 8	0 6 0	Panga. 3 0 9	4. Pabna.
5 7 6	...	5 6 0	34 4 1	4 12 1	...	0 3 0	0 12 0	...	7 4 0	0 8 0	Panga. 3 4 4	5. Rangpur.
5 14 0	...	5 (a) 8 6	43 4 4	8 1 1	28 14 8	0 4 7	...	...	4 15 8	0 5 9	Panga. 2 14 8	6. Dacca.
5 11 9	20 14 10	...	35 6 0	9 10 11	16 4 2	...	...	...	4 8 8	...	Panga. 3 0 2	7. Chittagong.
3 15 0	20 2 8	4 10 2	29 7 4	3 8 0	...	0 5 0	0 (f) 6 1	...	4 0 0	0 5 7	Panga. 2 15 7	8. Patna.
3 4 8	...	...	31 3 10	8 0 0	...	...	...	...	5 11 6	0 4 4	Panga. 3 2 11	9. Muzaffarpur.
4 (b) 2 10	23 13 10	...	32 14 8	5 (b) 6 9	...	...	...	...	5 0 0	0 5 3	Panga. 2 15 6	10. Bhagalpur.
4 8 8	23 4 8	...	34 8 1	4 3 8	25 0 0		0 7 9	...	3 15 1	0 4 4	Karkatch. 2 8 0	11. Cuttack.
4 14 1	24 11 4	...	36 6 1	9 10 10	1 14 6	0 9	0 8 0	...	5 6 8	0 5 0	Panga. 3 9 1	12. Ranchi.

PRICES-CURRENT (retail) of Food-grains and Salt in the Head-quarters

Number.	DISTRICTS.	QUANTITIES PER RUPEE IN														
		WHEAT.			BARLEY.			RICE, COMMON.			JOWAR OR CHOLUM (*Sorghum Vulgare*).		
		Present return.	Next preceding return.	Corresponding return of last year.	Present return.	Next preceding return.	Corresponding return of last year.	Present return.	Next preceding return.	Corresponding return of last year.	Present return.	Next preceding return.	Corresponding return of last year.
	BENGAL.	S. Ch.	S. Ch.	S. Ch.	S. Ch.	S. Ch.	S. Ch.	S. Ch.	S. Ch.	S. Ch.	S. Ch.	S. Ch.	S. Ch.
BURDWAN DIVISION. 1	Burdwan ...	...	..	15 8	...	...	...	14 0	13 8	12 12	...	...	...
2	Birbhum ...	12 12	14 4	15 0	...	...	...	14 0	14 4	13 8	...	...	...
3	Bankura ...	13 0	14 0	16 8	...	...	...	14 0	15 0	14 8	...	...	...
4	Midnapore ...	9 0	9 0	12 0	...	...	...	15 0	16 0	15 0	...	...	...
5	Hooghly ...	8 0	8 0	12 0	...	...	...	11 0	11 0	10 0	...	..	...
6	Howrah ...	...	...	13 5	...	...	...	13 0	13 0	12 0	...	.	...
PRESIDENCY DIVISION. 7	24-Parganas ..	...	...	...	...	...	...	11 0	11 0	12 0	...	..	...
8	Calcutta ...	10 10	10 10	11 0	14 0	15 0	16 0	8 10	9 10	9 10	15 0	16 0	17 0
9	Nadia ...	12 13	13 0	15 4	24 9	...	20 0	12 5	12 5	12 8	...	...	...
10	Murshidabad ...	13 8	13 8	16 0	22 0	22 0	24 0	12 8	12 8	12 0	...	...	...
11	Jessore ...	10 0	10 0	11 8	Country 16 0 / Patnai 11 4	Country 16 0 / Patnai 11 4	Country 16 0 / Patnai 12 0	14 0	14 0	16 0	...	...	...
12	Khulna ...	..	...	...	...	...	...	14 8	16 0	16 0	...	...	...
RAJSHAHI DIVISION. 13	Rajshahi ...	14 4	15 0	17 13	24 0	25 8	27 0	12 0	11 4	13 14	...	...	...
14	Dinajpur ...	11 8	13 0	13 4	...	...	...	14 8	14 8	15 9	...	...	...
15	Jalpaiguri ...	10 0	10 0	11 0	...	...	...	12 0	12 0	13 8	...	...	...
16	Darjeeling ...	...	...	...	...	...	...	11 0	11 8	12 0	...	...	...
17	Rangpur ...	11 8	11 8	11 8	...	...	...	12 0	12 0	11 4	...	...	...
18	Bogra ...	12 0	12 0	14 1	...	...	...	13 8	14 4	16 8	...	...	...
19	Pabna ...	..	15 0	18 12	...	15 12	24 0	12 0	11 4	17 4	...	...	...
DACCA DIVISION. 20	Dacca ...	13 0	14 0	16 0	24 0	24 0	29 0	13 5	15 8	16 0	...	...	...
21	Mymensingh ...	10 0	13 8	12 0	10 1	10 10	11 0	14 0	14 0	14 0	...	...	...
22	Faridpur ...	16 0	16 0	18 12	25 0	24 8	30 0	12 0	12 0	14 0	...	...	...
23	Backergunge ...	..	...	...	...	...	...	13 8	13 0	14 4	...	...	...

* Revised figures.

A. In the subdivisions the retail prices of salt per rupee are—Kalna 16 seers; Katwa 16½ seers; Raniganj 16 seers.
B. At Rampur Hat the retail price of salt is 16 seers per rupee.
C. At Vishnupur the retail price of salt is 16⅔ seers per rupee.
D. In the subdivisions the retail prices of salt per rupee are—Contai 15 seers; Tamluk 16 seers; Ghatal 16 seers.
E. In the subdivisions the retail prices of salt per rupee are—Serampore report not received; Arambagh 16 seers.
F. At Uluberia the retail price of salt is 16 seers per rupee.
G. In the marts in the interior of the district the retail prices of salt per rupee are—Chetla 16 seers; Barasat 14 seers; Baduria 14 seers 8 chitaks, Mograhat 16 seers; Barrackpore 13 seers.
H. In the subdivisions the retail prices of salt per rupee are—Kushtia 16 seers; Chuadanga 17½ seers (pargs); Meherpur 13 seers; Ranaghat 14½ seers.
I. In the subdivisions the retail prices of salt per rupee are—Lalbagh 16 seers; Kandi 14 seers; Jangipur 16 seers.
J. In the subdivisions the retail prices of salt per rupee are—Jhenida 16 seers, Magura 16 seers, Bangaon 16 seers; Narail 14 1/7 seers.

SEERS OF 80 TOLAHS.

	BAJRA OR CUMBU (*Pennisetum typhoideum*).			MARUA OR RAGI (*Eleusine Coracana*).		
	Present return.	Next preceding return.	Corresponding return of last year.	Present return.	Next preceding return.	Corresponding return of last year.
	S. Ch.	S. Ch.	S. Ch.	S. Ch.	S. Ch.	S. Ch.
	...	...	...	...	...	...
	...	...	...	...	...	...
	...	...	...	...	...	...
	...	...	...	...	...	...
	...	...	...	...	...	...
	...	...	...	...	...	...
	...	...	...	...	...	...
	...	...	...	...	...	...
	2 0	13 0*	14 0	...	...	...
	...	...	...	...	...	...
	...	...	...	...	...	...
	...	...	...	...	...	...
	...	...	...	...	...	...
	...	...	...	...	...	...
	...	...	...	...	...	...
	...	...	...	...	...	...
	...	...	...	13 0	13 0	13 0
	...	...	...	...	...	...
	...	...	...	...	...	...
	...	...	...	...	...	...
	...	...	...	...	...	...
	...	...	...	...	...	...
	...	...	...	...	...	...

KANGNI OR KAKUN ITALIAN MILLET (*Setaria italica*).			GRAM, CHANA, CHHOLA, KADALAI OR SUNAGA (*Cicer arietinum*).		
Present return.	Next preceding return.	Corresponding return of last year.	Present return.	Next preceding return.	Corresponding return of last year.
S. Ch.	S. Ch.	S. Ch.	S. Ch.	S. Ch.	S. Ch.
...	...	...	14 0	15 8	19 0
...	...	...	14 4	15 0	18 0
...	...	...	11 8	13 8	17 0
...	...	...	11 0 to 13 0	11 0 to 13 0	14 0 to 16 0
...	...	...	13 0	13 0	18 0
...	...	...	16 0	16 0	17 0
...	...	...	16 0	16 0	16 0
7 0	7 0	8 0	12 4	13 0	14 0
...	...	...	18 5	18 8	20 0
...	...	...	17 0	18 0	20 0
...	...	...	16 0	16 0	16 0
...	...	...	15 0	15 0	14 0
...	...	...	17 4	17 10	21 0
...	...	...	16 0	16 0	15 0
...	...	...	13 0	13 0	14 0
...	...	...	11 0	10 0	12 0
	...	...	13 0	14 0	15 0
...	...	...	15 12	14 4	15 0
...	...	...	12 0	18 5	19 2
...	...	...	15 0	15 8	15 0
...	...	...	13 0	13 0	13 4
	...	...	10 0	10 0	12 0
...	...	...	13 0	13 0	13 8

Station Bazars of the Districts of Bengal on the 31st May 1905.

Indian-corn or Maize (*Zea mays*).			Arhar (*dal*) or Tur, Cadjan Pea (*Cajanus indicus*)			Salt.			Wholesale prices per maund of 40 seers. Salt.			Districts.	Number.	
Present return.	Next preceding return.	Corresponding return of last year.	Present return.	Next preceding return.	Corresponding return of last year.	Present return.	Next preceding return.	Corresponding return of last year.	Present return.	Next preceding return.	Corresponding return of last year.			
S. Ch.	S. Ch.	S. Ch.	S. Ch.	S. Ch.	S. Ch.	S. Ch.	S. Ch.	S. Ch.	Rs. A. P.	Rs. A. P.	Rs. A. P.	BENGAL.		
...	...	...	10 8	10 0	13 0	A 16 8	15 8	14 0	2 3 6	2 4 0	2 13 6	Burdwan.	1	Burdwan Division.
...	...	...	9 0	9 0	13 0	B 15 0	13 8	12 0	2 8 0	2 8 0	3 2 6	Birbhum.	2	
...	...	...	12 0	13 8	13 0	C 16 12	16 12	14 0	Panga. 2 6 0	2 6 0	2 13 0	Bankura.	3	
...	...	...	9 0	10 8	11 8	D 14 0	14 0	11 8	2 6 0	2 6 0	2 14 0	Midnapore.	4	
...	...	...	10 0	10 0	11 0	E 16 0	16 0	13 0	2 8 0	2 8 0	3 0 0	Hooghly.	5	
...	...	...	11 0	11 0	12 0	F 16 0	16 0	13 0	2 4 0	2 4 0	3 1 0	Howrah.	6	
...	...	...	11 0	11 0	12 0	G 16 0	16 0	12 4	2 1 6	2 2 6	2 11 0	24-Parganas.	7	Presidency Division.
15 0	15 0	...	8 0	8 0	8 10	13 0	13 0	Panga. 11 0	2 8 0	2 8 0	2 10 0	Calcutta.	8	
...	...	...	9 2	9 2	10 0	H 16 0	16 0	13 0	2 4 0	2 4 0	3 0 0	Nadia.	9	
...	...	...	10 0	11 0	15 0	I 16 0	16 0	12 0	2 8 0	2 8 0	3 4 0	Murshidabad.	10	
...	...	...	16 0	16 0	16 0	J 16 0	16 0	Panga. 12 0	2 8 0	2 8 0	3 2 0	Jessore.	11	
...	...	...	10 0	10 0	9 2	K 13 5	13 5	13 5	3 0 0	3 0 0	3 0 0	Khulna.	12	
—	...	...	12 0	12 0	13 8	L 15 9	15 9	12 12	2 9 0	2 9 0	3 1 3	Rajshahi.	13	Rajshahi Division.
...	...	...	10 0	10 0	12 0	M 15 0	15 0	13 4	2 10 0	2 10 0	3 0 0	Dinajpur.	14	
...	...	...	8 0	8 0	10 0	N 13 8	13 0	Panga. 12 0	2 12 0	2 12 0	3 2 0	Jalpaiguri.	15	
12 0	12 0	20 0	6 8	6 8	7 0	O 11 0	11 0	10 0	3 8 0	3 8 0	4 0 0	Darjeeling.	16	
...	...	...	10 0	10 0	9 0	P 16 0	16 0	Panga. 12 1½	2 8 0	2 8 0	3 5 4	Rangpur.	17	
...	...	...	17 4	17 4	17 4	15 12	15 12	12 12	2 8 0	2 8 0	3 0 0	Bogra.	18	
...	...	...	10 10	12 0	12 0	Q 16 0	16 0	Panga. 12 12	2 8 0	2 8 0	3 2 6	Pabna.	19	
...	...	...	15 0	16 0	16 0	R 16 0	16 0	13 0	2 8 0	2 8 0	3 0 0	Dacca.	20	Dacca Division.
...	...	...	11 0	11 0	10 8	S 15 4	15 4	12 12	2 10 0	2 10 0	3 2 0	Mymensingh.	21	
...	...	...	8 0	8 0	10 0	T 16 0	16 0	12 0	2 8 0	2 8 0	3 4 0	Faridpur.	22	
...	...	...	...	...	...	U 14 0	14 0	Panga. 13 0	2 12 0	2 12 0	3 0 0	Backergunge.	23	

K. In the subdivisions the retail prices of salt per rupee are—Bagerhat 16 seers; Satkhira 16 seers.
L. In the subdivisions the retail prices of salt per rupee are—Nator 15½ seers, Naugaon 13½ seers.
M. No report from subdivision.
N. At Alipur Duars the retail price of salt is 10 seers per rupee.
O. At Kurseong and Siliguri the retail prices of salt per rupee are 11 seers and 14 seers, respectively.
P. In the subdivisions the retail prices of salt per rupee are—Gaibanda 12 seers; Kurigram 12 seers; Nilphamari 14 seers.
Q. At Sirajganj the retail price of salt is 17 seers per rupee.
R. In the marts in the interior of the district the retail prices of salt per rupee are—Madanganj 14½ seers, Manikganj 10½ seers, Mirkadim 12½ seers.
S. In the subdivisions the retail prices of salt per rupee are—Kishorganj 13 seers 14 chittaks; Jamalpur 13½ seers; Tangail 13 seers; Netrokona 11½ seers.
T. In the subdivisions the retail prices of salt per rupee are—Goalundo 13 seers 14 chittaks; Madaripur 14 seers.
U. In the subdivisions the retail prices of salt per rupee are—Pirojpur 11 seers; Patuakhali 13 seers; Bhola 14 seers.

PRICES-CURRENT (retail) of Food-grains and Salt in the Head-quarters

QUANTITIES PER RUPEE IN

Number.	DISTRICTS.	WHEAT.			BARLEY.			RICE, COMMON.			JOWAR OR CHOLUM (*Sorghum Vulgare*).		
		Present return.	Next preceding return.	Corresponding return of last year.	Present return.	Next preceding return.	Corresponding return of last year.	Present return.	Next preceding return.	Corresponding return of last year.	Present return.	Next preceding return.	Corresponding return of last year.
BENGAL—*concluded.*		S. Ch.	S. Ch.	S. Ch.	S. Ch.	S. Ch.	S. Ch.	S. Ch.	S. Ch.	S. Ch.	S. Ch.	S. Ch.	S. Ch.
CHITTAGONG DIVISION. 24	Tippera ...	...	...	...	...	...	...	13 0	13 5	13 2	...	...	...
25	Noakhali ...	...	...	...	...	...	...	13 0	13 0	13 11	...	...	...
26	Chittagong ...	...	...	...	...	...	...	11 7	14 0	14 0	...	...	...
27	Chittagong Hill Tracts.	...	...	...	...	...	...	14 0	13 0 to 14 0	12 0	...	...	...
BIHAR.													
PATNA DIVISION. 28	Patna	13 8	13 0	18 0	20 0	22 0	26 0	14 0	14 0	16 0	12 0	12 0	28 0
29	Gaya ...	13 12	13 9	18 0	22 0	22 0	24 0	13 0	12 9	12 13	21 0	20 8	...
30	Shahabad ...	14 0	14 8	18 0	20 0	20 0	28 0	14 0	15 0	15 0	...	...	...
31	Saran ...	12 8	14 0	17 0	20 0	22 0	28 0	12 8	13 8	16 0	...	...	...
32	Champaran ...	15 0	14 8	17 0	24 8	28 0	38 0	14 0	13 8	17 0	...	...	...
33	Muzaffarpur ...	12 0	12 0	15 0	23 0	24 0	26 0	12 0	13 0	15 0	...	...	...
34	Darbhanga ...	15 6	15 6	18 11	24 3	26 7	30 4	14 8	14 8	15 12	...	...	...
BHAGALPUR DIVISION. 35	Monghyr ...	15 0	15 3	18 0	27 6½	29 5	30 0	13 0	13 0	12 8	...	...	...
36	Bhagalpur ...	13 12	13 4	16 8	24 0	25 4	23 0	15 0	14 8	13 14	...	...	...
37	Purnea ...	16 0	16 0	17 0	...	...	...	11 8	11 8	15 0	...	...	...
38	Malda ...	13 0	13 0	18 0	...	...	...	12 0	12 8	14 0	...	...	...
39	Santhal Parganas.	10 12	11 0	13 8	18 0	19 0	25 0	14 0	15 0	12 0	...	...	...
ORISSA.													
ORISSA DIVISION. 40	Cuttack ...	13 12½	13 12	17 1	...	...	...	17 1	17 1	18 6	...	...	...
41	Balasore ...	13 0	13 0	11 6	...	...	...	17 0	17 0	18 0	...	...	...
42	Angul ...	8 0	8 0	8 0	...	...	...	18 0	18 0	26 0	...	...	...
43	Puri ...	13 0	13 12	13 2	...	...	...	15 12	17 1	17 11	...	...	...
CHOTA NAGPUR.													
CHOTA NAGPUR DIVISION. 44	Hazaribagh ...	11 8	11 8	13 8	15 8	17 0	17 8	11 8	11 8	12 8	...	...	...
45	Ranchi ...	7 0 to 11 8	7 8 to 11 0	8 12 to 14 0	14 8	14 0	16 0	11 8	12 0	13 0	...	...	...
46	Palamau ...	14 10	14 10	17 13	20 4	20 4	23 10	12 6	12 6	12 6	...	...	...
47	Manbhum ...	12 0	12 0	13 0	13 0	16 0	20 0	13 0	13 0	13 0	...	...	...
48	Singhbhum ...	14 0	14 0	12 0	...	...	...	14 0	14 0	15 0	...	...	...

V. In the subdivisions the retail prices of salt per rupee are—Chandpur 13 seers 8 chittaks; Brahmanbaria 14 seers 8 chittaks.
W. At Feni Hát the retail price of salt is 16 seers per rupee.
X. Return from Cox's Bazar not received.
Y. At Chandraghona the retail price of salt is 12 seers per rupee.
Z. In the subdivisions the retail prices of salt per rupee are—Barh 16 seers, Dinapore return not received; Bihar 13 seers.
a. In the subdivisions the retail prices of salt per rupee are—Jahanabad 14 seers; Nawada 16 seers; Aurangabad 15 seers.
b. In the subdivisions the retail prices of salt per rupee are—Buxar 15 seers; Bhabhua 15 seers; Sasaram 16 seers.
c. In the subdivisions the retail prices of salt per rupee are—Siwan 14 seers 8 chittaks; Gopalganj 15½ seers.
d. At Bettiah the retail price of salt is 14 seers per rupee.
e. In the subdivisions the retail prices of salt per rupee are—Hajipur 14 seers; Sitamarhi 14 seers.
f. In the subdivisions the retail prices of salt per rupee are—Samastipur 15 seers; Madhubani 15 seers 9 chittaks.
g. In the subdivisions the retail prices of salt per rupee are—Begusarai 14 seers; Jamui 13½ seers.

CALCUTTA,
The 13th June 1905.

SERS OF 80 TOLAHS.

RAJRA OR CUMBU (*Penicillaria typhoidæum*).			MARUA OR RAGI (*Eleusine Coracana*).		
Present return.	Next preceding return.	Corresponding return of last year.	Present return.	Next preceding return.	Corresponding return of last year.
S. Ch.	S. Ch.	S. Ch.	S. Ch.	S. Ch.	S. Ch.
...	...	...	...	...	...
...	...	...	...	...	...
...	...	...	...	...	...
...	...	...	...	...	...
...	...	...	...	...	...
...	...	...	...	...	...
...	...	...	...	...	...
...	...	...	18 0	19 0	20 0
...	...	...	28 0	28 0	35 0
...	...	...	23 0	24 0	26 0
...	...	...	26 7	24 0	28 8
...	...	...	...	...	...
...	...	...	...	...	...
...	...	...	...	...	...
...	...	...	...	...	...
...	...	...	...	...	...
...	...	...	...	...	...
...	...	...	...	...	...
...	...	...	...	...	...
...	...	...	19 8	20 0	26 4
...	...	...	25 0	26 0	36 0
...	...	...	...	...	...
...	...	24 0	...	...	...
...	...	...	...	...	...

Kangni or Kakun, Italian millet (*Setaria italica*).			Gram, Chana, Chhola, Kadalai or Sunaga (*Cicer arietinum*).		
Present return.	Next preceding return.	Corresponding return of last year.	Present return.	Next preceding return.	Corresponding return of last year.
S. Ch.	S. Ch.	S. Ch.	S. Ch.	S. Ch.	S. Ch.
...	...	...	...	...	...
...	...	...	11 8	11 8	12 8
...	...	...	13 0	14 0	13 0
...	...	...	...	...	...
...	18 0	22 0	19 0	19 0	23 0
14 7	11 4	...	19 8	20 0	20 8
...	...	...	18 0	18 0	23 0
...	...	...	16 0	17 0	21 0
...	...	...	19 4	20 0	23 0
...	...	...	13 0	13 0	21 0
...	...	...	18 11	18 11	23 1
...	...	...	21 0	20 15	21 0
...	...	...	20 0	18 12	21 4
...	...	...	15 0	15 0	16 0
...	...	...	18 0	16 0	24 0
...	...	...	14 8	15 0	17 0
...	...	...	Biri or kalai. 18 6	18 6	18 6
...	...	...	Chhola. 14 0	14 0	14 0
...	...	...	Biri. 18 0	18 0	16 0
...	...	...	16 0	16 0	20 0
...	...	...	17 1	17 1	18 0
...	...	...	14 8	14 8	14 8
...	...	...	12 8	11 12 to 12 0	14 0 to 14 8
...	...	...	16 14	16 14	20 4
...	...	...	14 0	14 0	16 0
...	...	...	14 0	14 0	13 0

Station Bazars of the Districts of Bengal on the 31st May 1905—concld.

INDIAN-CORN OR MAIZE (*Zea mays*).			ARHAR (*dal*) OR THUR, CADJAN PEA (*Cajanus indicus*).			SALT.			WHOLESALE PRICES PER MAUND OF 40 SEERS. SALT.			DISTRICTS	Number.	
Present return.	Next preceding return.	Corresponding return of last year.	Present return.	Next preceding return.	Corresponding return of last year.	Present return.	Next preceding return.	Corresponding return of last year.	Present return.	Next preceding return.	Corresponding return of last year.			
S. Ch.	S. Ch.	S. Ch.	S. Ch.	S. Ch.	S. Ch.	S. Ch.	S. Ch.	S. Ch.	Rs. A. P.	Rs. A. P.	Rs. A. P.	BENGAL—*concluded.*		
...	...	...	...	...	...	12 13 V	12 13	10 10	2 10 0	2 10 0	3 2 0	Tippera.	24	Chittagong Division.
...	...	...	...	...	...	16 0 W	14 0	12 15	2 8 0	2 12 0	3 2 0	Noakhali.	25	
...	...	...	9 8	10 0	9 8	16 0 X	16 0	13 0	Panga. 2 6 0	2 6 0	3 0 0	Chittagong.	26	
...	...	...	8 0	8 0	7 0	13 0 Y	13 0	11 0	3 0 0	3 0 0	3 8 0	Chittagong Hill Tracts.	27	
												BIHAR.		
18 0	18 0	29 0	12 0	12 0	16 0	16 0 Z	16 0	13 0	Panga. 2 8 0	2 8 0	2 15 0	Patna.	28	Patna Division.
18 7	17 14	23 0	11 13	12 0	13 7	15 7 a	15 6	12 15	2 9 0	2 10 0	3 1 9	Gaya.	29	
...	...	...	12 0	12 0	15 0	16 0 b	16 0	13 0	2 8 0	2 8 0	3 1 3	Shahabad.	30	
18 0	19 0	28 0	11 0	12 0	16 0	16 0 c	16 0	13 0	Panga. 2 7 6	2 8 0	2 15 0	Saran.	31	
21 9	21 0	31 0	12 8	15 0	15 0	15 0 d	15 0	12 8	2 9 0	2 9 0	3 3 0	Champaran.	32	
17 0	17 0	28 0	12 8	13 0	15 0	13 0 e	13 0	12 4	2 15 3	2 15 3	3 3 0	Muzaffarpur.	33	
22 0	23 2	27 8	12 1	13 8	18 11	15 6 f	15 6	13 4	3 3 5 0	3 5 0	3 8 0	Darbhanga.	34	
...	...	...	10 8	10 8	14 0	15 11 g	15 11	12 0	2 10 0	2 10 0	3 4 0	Monghyr	35	Bhagalpur Division.
25 0	21 4	23 0	12 0	11 6	15 4	16 8 h	15 8	12 8	Panga. 2 7 0	2 8 6	2 14 0	Bhagalpur.	36	
25 0	25 0	23 0	11 0	11 0	10 8	11 0 i	11 0	11 0	3 8 0	3 8 0	3 12 0	Purnea.	37	
...	32 0	...	11 0	12 0	13 0	13 0 j	13 0	11 0	2 12 0	2 14 0	3 8 0	Malda.	38	
18 0	19 0	16 0	16 0	16 0	20 0	14 8 k	14 0	11 0	2 10 0	2 10 0	3 4 0	Santhal Parganas.	39	
												ORISSA.		
...	...	...	18 6	18 6	18 6	15 0 l	15 0	15 0	2 8 0	2 8 0	2 8 0	Cuttack.	40	Orissa Division.
...	...	...	10 0	11 8	10 0	17 0 m	17 0	13 0	Panga. 2 6 0	2 6 0	2 15 0	Balasore.	41	
...	...	...	20 0	20 0	25 0	10 8 n	10 8	10 8	Karkatch. 3 4 0	3 4 0	3 8 0	Angul.	42	
...	...	...	11 13	10 8	11 2	16 0 o	16 0	16 0	2 8 0	2 8 0	2 5 0	Puri	43	
												CHOTA NAGPUR.		
14 8	15 0	20 0	9 8	9 0	10 0	12 8 p	13 14	10 8	3 1 3	3 0 0	3 10 0	Hazaribagh.	44	Chota Nagpur Division.
...	16 0	26 0	8 0	6 0 to 6 8	8 8 to 10 0	12 0	12 0	11 0	Panga. 3 4 0	3 4 0	3 7 0	Ranchi.	45	
16 14	16 14	...	12 6	13 8	11 13	15 3	15 3	11 13	Panga. ...	...	...	Palamau.	46	
...	18 0	22 0	11 8	11 8	12 0	14 0 q	14 0	12 0	Panga. 2 8 0	2 8 0	3 0 0	Manbhum.	47	
...	...	...	13 0	13 0	...	11 0	11 0	11 0	Panga. 3 8 0	3 8 0	3 8 0	Singhbhum.	48	

h. In the subdivisions the retail prices of salt per rupee are—Banka 11¼ seers; Madhipura 13 seers; Supaul 14 seers.
i. In the subdivisions the retail prices of salt per rupee are—Kishanganj 12 seers; Araria 14 seers.
j. At Balia Nawabganj the retail price of salt is 12½ seers per rupee.
k. In the subdivisions the retail prices of salt per rupee are—Deoghur 16 seers; Godda 10 seers; Jamtara 16 seers; Pakaur 16 seers; Rajmahal 16 seers.
l. In the subdivisions the retail prices of salt per rupee are—Jajpur 16 seers; Kendrapara 16 seers.
m. At Bhadrak the retail price of salt is 16 seers per rupee.
n. In the marts in the interior of the district the retail prices of salt per rupee are—Sankhpur 11 seers; Bisipara 9 seers.
o. At Khurda the retail price of salt is 16 seers per rupee.
p. At Gumla the retail price of salt is 11 seers per rupee.
q. At Gobindpur the retail price of salt is 16 seers per rupee.

Published for general information.

R. W. CARLYLE,

Offg. Chief Secy. to the Govt. of Bengal.

PRICES-CURRENT (wholesale) of Food-grains, Firewood, &c.

Number.	Marts.	Rice (best sort).			Common rice (*mota chaul*).			Wheat (*Triticum sativum*).			Barley (*Hordeum vulgare*).		
		Present return.	Next preceding return.	Corresponding return of last year.	Present return.	Next preceding return.	Corresponding return of last year.	Present return.	Next preceding return.	Corresponding return of last year.	Present return.	Next preceding return.	Corresponding return of last year.
		Rs. A. P.	Rs. A. P.	Rs. A. P.	Rs. A. P.	Rs. A. P.	Rs. A. P.	Rs. A. P.	Rs. A. P.	Rs. A. P.	Rs. A. P.	Rs. A. P.	Rs. A. P.
1	Calcutta ...	5 8 0	5 4 0	5 0 0	4 8 0	4 4 0	4 0 0	3 8 0	3 8 0	3 4 0	2 10 0	2 8 0	2 [illegible]
2	Burdwan ...	3 14 0	4 0 0	4 1 6	2 13 0	2 14 0	3 2 3	...	...	...	—	—	—
3	Midnapore ...	3 2 0	3 0 0	3 4 0	2 9 0	2 8 0	2 10 6	...	...	...	...	...	—
4	Pabna ..	...	...	6 10 0	3 2 9	3 2 8	2 4 0	...	...	2 2 0	...	...	—
5	Rangpur ...	4 0 0	4 0 0	3 8 6	3 0 0	2 14 0	3 1 9	3 8 0	3 8 0	3 5 4	...	...	—
6	Dacca ..	3 11 0	3 11 0	3 0 0	2 14 0	2 8 0	2 6 0	3 0 0	2 9 0	2 6 0	1 10 0	1 8 0	1 4
7	Chittagong ..	...	...	...	2 14 0	2 12 0	3 0 0	...	...	...	—	—	—
8	Patna ..	4 0 0	4 0 0	2 12 0	3 2 0	3 1 0	2 7 0	2 12 0	2 14 0	2 3 0	2 0 0	1 13 0	1 1
9	Muzaffarpur ...	5 0 0	5 0 0	5 0 0	3 1 3	2 13 9	2 9 3	3 1 3	3 1 3	2 3 0	1 10 6	1 9 6	1 1
10	Bhagalpur ..	3 9 0	3 9 0	3 15 0	2 13 0	2 11 0	2 14 0	2 14 0	3 0 0	2 7 0	1 11 0	1 9 0	1 12
11	Cuttack ...	3 13 0	3 13 0	3 12 0	2 5 6	2 5 6	2 2 6	2 14 0	2 14 0	2 4 0	—	...	—
12	Ranchi ...	4 8 0	4 3 4	3 15 9	3 1 0	3 1 0	2 12 0	3 8 0 to 5 11 6	3 10 0 to 5 5 0	2 14 0 to 4 9 0	2 12 0	2 14 0	2 1

CALCUTTA,
The 13th June 1905.

Juar or Cholum (*Sorghum vulgare*).						Bajra or Cumbu (*Pennisetum typhoideum*).						Marua or Ragi (*Eleusine coracana*).						Gram, Chana, Chola, Kadalay, or Sunaga (*Cicer arietinum*).					
Present return.			Next preceding return.			Corresponding return of last year.			Present return.			Next preceding return.			Corresponding return of last year.			Present return.			Next preceding return.			Corresponding return of last year.		
Rs.	A.	P.	Rs.	A.	P.	Rs.	A.	P.	Rs.	A.	P.	Rs.	A.	P.	Rs.	A.	P.	Rs.	A.	P.	Rs.	A.	P.	Rs.	A.	P.
2	8	0	2	6	0	2	4	0	2	12	0	2	4	0	2	10	0	...			...			...			3	0	0	2	12	0	2	8	0
...			...			...			...			...			...			...			...			...			2	12	0	2	10	0	2	2	0
...			...			...			...			...			...			...			...			...			2 to 3	12 4	0 0	2 to 3	12 4	0 0	2 to 2	4 8	0 0
...			...			...			...			...			...			...			...			...			2	8	0	2	1	6	2	0	0
...			...			...			...			...			...			...			...			...			2	12	0	2	4	0	2	7	0
...			...			...			...			...			...			...			...			...			2	10	0	2	8	0	2	8	0
...			...			...			...			...			...			...			...			...			3	0	0	2	12	0	3	0	0
3	5	0	3	5	0	1	4	0	...			...			...			...			...			...			2	1	0	2	1	0	1	11	0
...			...			...			...			...			...			1	10	6	1	9	6	1	8	0	2	16	9	2	13	9	1	13	0
...			...			...			...			...			...			...			...			...			2	0	0	2	2	0	1	14	0
																											Buri or kalai								
...			...			...			...			...			...			...			...			...			2	1	6	2	1	6	2	2	6
...			...			...			...			...			...			...			...			...			3 to 3	3 5 6	0 0	3 to 3	12 6	0 0	2 to 2	12 14	0 0

Indian-corn or Maize (*Zea mays*).			Arhar Dal or Thur—Cadjan Pea (*Cajanus indicus*).			Linseed.			Mustard and Rapeseed		
Present return.	Next preceding return.	Corresponding return of last year.	Present return.	Next preceding return.	Corresponding return of last year.	Present return.	Next preceding return.	Corresponding return of last year.	Present return.	Next preceding return.	Corresponding return of
Rs. A. P.	Rs. A. P.	Rs. A. P.	Rs. A. P.	Rs. A. P.	Rs. A. P.	Rs. A. P.	Rs. A. P.	Rs. A. P.	Rs. A. P.	Rs. A. P.	Rs.
2 8 0	2 8 0	...	4 12 0	4 12 0	4 8 0	4 14 0	4 14 0	4 6 0	4 10 0	4 10 0	4
...	...	...	3 13 0	4 1 0	3 2 0	...	...	...	5 4 0	5 4 0	3
..	...	...	4 0 0	3 6 0	3 4 0	4 12 0	4 4 0	3 2 0	Black mustard. 5 12 0	5 4 0	3
									Rapeseed. 4 4 0	4 4 0	2
...	...	...	...	...	3 5 3	3 5 3	4 10 0	3 8 0	5 4 0	5 0 0	4
...	...	...	4 0 0	3 0 0	3 12 5	—	...	—	5 4 0	5 4 0	3
...	...	...	2 8 0	2 7 0	2 6 0	...	...	...	—	...	
...	...	...	4 4 0	4 0 0	4 8 0	...	...	...	4 12 0	4 12 0	3
2 3 0	2 3 0	1 5 6	3 5 0	3 5 0	2 7 0	5 12 0	5 2 0	3 5 0	5 0 0	5 0 0	2
2 3 6	2 3 6	1 6 3	3 1 3	2 15 3	2 8 0	...	...	...	...	...	
									Rapeseed. 5 0 0	5 8 0	3
1 10 9	1 14 0	1 12 0	3 12 0	3 15 0	2 8 6	5 1 0	5 5 0	2 14 0	Mustard. 4 12 0	4 0 0	4
...	...	...	2 3 0	2 3 0	2 2 6	...	...	—	4 6 0	4 6 0	4
..	...	—	6 10 6	6 2 6 to 6 10 6	4 0 0 to 4 11 3	5 0 0	4 0 0	4 9 0	5 0 0 to 5 8 0	4 10 9 to 5 4 0	3

STANDARD SEERS.

Til or Jinjili seed.						Sugar (raw).						Cotton (cleaned).						Jute.					
Present return.		Next preceding return.		Corresponding return of last year.		Present return.		Next preceding return.		Corresponding return of last year.		Present return.		Next preceding return.		Corresponding return of last year.		Present return.		Next preceding return.		Corresponding return of last year.	
A.	P.	Rs.	A.	P.	Rs.	A.	P.	Rs.	A.	P.	Rs.	A.	P.	Rs.	A.	P.	Rs.	A.	P.	Rs.	A.	P.	Rs.	A.	P.	Rs.	A.	P.
4	0	4	4	0	3	12	0	5	0	0	5	4	0	4	8	0	17	0	0	17	0	0	17	0	0	5	14	0	5	14	0	5	6	0
...		...			...			6	0	0	6	0	0	4	12	0	20	0	0	20	0	0	26	0	0	...			...			...		
...		...			...			6	0	0	5	6	0 to 5	10	0	4	4	0 to 4	12	0	28	0	0	28	0	0	26	0	0	...			...			...		
...		...			...			...			4	0	0	4	6	0	25	0	0	25	8	0	22	0	0	7	3	6	7	2	6	4	14	9
...		...			...			5	0	0	5	0	0	6	3	6	...			...			...			5	8	0	5	8	0	5	5	4
...		...			...			6	0	0	6	4	0	6	0	0	...			...			...			6	0	0	5	12	0	5	8	9
...		...			...			8	8	0	8	0	0	5	4	0	18	0	0	16	0	0	21	8	0	...			...			...		
12	0	6	0	0	3	0	0	4	8	0	4	8	0	3	12	0	18	0	0	19	0	0	20	0	0	8	0	0	8	0	0	4	0	0
...		...			...			3	10	0	3	10	0	3	1	3	...			...			...			...			...			...		
...		...			...			4	4	0	4	8	0	4	12	0	17	8	0	19	0	0	24	8	0	...			...			...		
2	0	4	13	0	2	15	6	4	9	0	4	9	0	4	0	0	22	0	0	22	0	0	30	0	0	...			...			...		
...		...			...			5	5	0 to 5	11	6	5	5	0 to 5	11	6	5	0 to 5	5	0	26	10	0	22	14	0	26	10	6	...			...		

Ghi (clarified butter).						Tobacco Leaf						Hides (cow).						Grass.					
Present return.			Next preceding return.			Corresponding return of last year.			Present return.			Next preceding return.			Corresponding return of last year.			Present return.			Next preceding return.			Corresponding return of last year.
Rs.	A.	P.	Rs.	A.	P.	Rs.	A.	P.	Rs.	A.	P.	Rs.	A.	P.	Rs.	A.	P.	Rs.	A.	P.	Rs.	A.	P.	Rs.
															Per 100 pieces.								
41	0	0	41	0	0	39	0	0	9	0	0	8	0	0	8	0	0	450	0	0	450	0	0	250	0	0	1	4	0	1	2	0	1
33	0	0	33	0	0	32	0	0	...			...			—			...			...			...			...			—			-
									Madhukhali.									Uncleaned, per piece.														
34	8	0	34	8	0	32	8	0	5	8	0	5	8	0	5	0	0	1	12	0	2	0	0	2	4	0	...			...			-
									Pulta.									to			to			to									
																		2	12	0	3	0	0	3	4	0							
																		Cleaned, per piece.															
									8	0	0	8	0	0	8	0	0	2	0	0	2	4	0	2	8	0							
																		to			to			to									
																		3	0	0	3	4	0	3	8	0							
40	0	0	46	10	8	52	0	0	3	0	0	12	0	0	12	0	0	...			...			...			...			...			-
34	0	0	34	0	0	32	14	2	4	8	0	4	8	0	4	10	4	—			...			—			0	3	0	0		0	0
																		Per maund.															
44	0	0	45	0	0	40	0	0	7	12	0	7	12	0	7	8	0	38	0	0	38	0	0	25	0	0	0	6	0	0	6	0	0
																		Per maund.															
36	0	0	35	0	0	34	0	0	6	0	0	7	0	0	16	0	0	12	0	0	16	0	0	16	0	0	...			...			-
29	0	0	28	0	0	29	0	0	3	8	0	3	8	0	3	8	0	...			...			...			...			...			0
30	7	6	30	7	6	32	0	0	8	0	0	8	0	0	8	0	0	...			...			—			—			—			-
34	8	0	32	0	0	31	0	0	5	12	0	5	12	0	6	5	0	...			...			...			...			...			-
																		Per maund.															
38	0	0	38	0	0	34	11	0	4	4	0	4	4	0	4	4	0	25	0	0	25	0	0	25	0	0	0	7	6	0	7	6	0
																		Per piece.															
35	0	0	38	12	0	35	8	10	10	0	0	10	0	0	6	10	0	2	8	0	1	8	0	2	0	0	0	6	4	0	6	4	0
to			to			to									to																		
40	0	0	40	0	0	42	10	8							13	5	8																

the undermentioned Marts of Bengal on the 31st May 1905.

Straw.			Juar stalks.			Price per maund of 40 standard seers.									Marts.
						Iron.			Firewood.			Salt.			
Present return.	Next preceding return.	Corresponding return of last year.	Present return.	Next preceding return.	Corresponding return of last year.	Present return.	Next preceding return.	Corresponding return of last year.	Present return.	Next preceding return.	Corresponding return of last year.	Present return.	Next preceding return.	Corresponding return of last year.	
Rs. A. P.	Rs. A. P.	Rs. A. P.	Rs. A. P.	Rs. A. P.	Rs. A. P.	Rs. A. P.	Rs. A. P.	Rs. A. P.	Rs. A. P.	Rs. A. P.	Rs. A. P.	Rs. A. P.	Rs. A. P.	Rs. A. P.	
1 0 0	0 14 0	0 14 0	...	...	...	6 0 0	6 0 0	5 12 0	0 8 0	0 8 0	0 8 0	2 8 0	Panga. 2 8 0	2 10 0	1. Calcutta.
0 8 6	0 8 6	0 12 6	...	...	...	...	...	...	0 7 0	0 7 3	0 6 0	2 4 0	2 4 0	2 13 0	2. Burdwan.
...	0 8 0	1 0 0	...	...	...	2 8 0 to 4 0 0	2 8 0 to 4 0 0	2 8 0 to 4 0 0	0 4 0	0 4 0	0 4 0	2 6 0	Panga. 2 6 0	2 14 0	3. Midnapore.
1 0 0	0 13 0	0 14 0	...	...	...	...	5 4 0	7 0 0	0 5 6	0 5 6	0 6 0	2 6 0	Panga. 2 8 0	3 2 6	4. Pabna.
0 12 0	0 12 0	0 12 0	...	...	...	7 4 0	7 4 0	7 4 0	0 8 0	0 8 0	0 8 0	2 8 0	Panga. 2 8 0	3 5 4	5. Rangpur.
...	...	...	...	...	...	5 8 0	5 8 0	4 12 0	0 6 0	0 6 0	0 5 6	2 8 0	Panga. 2 8 0	3 0 0	6. Dacca.
...	...	...	...	...	...	5 0 0	4 4 0	4 8 0	...	...	...	2 6 0	Panga. 2 6 0	3 2 0	7. Chittagong.
...	...	...	...	...	...	4 0 0	4 0 0	4 0 0	0 6 0	0 6 0	0 6 0	2 8 0	Panga. 2 8 0	2 15 0	8. Patna.
...	...	...	...	...	...	5 11 6	5 11 6	5 11 6	0 4 0	0 4 0	0 4 0	2 15 3	Panga. 2 15 3	3 3 0	9. Muzaffarpur.
...	...	...	...	...	...	5 0 0	5 0 0	5 0 0	0 5 0	0 5 0	0 5 3	2 7 0	2 8 6	2 14 3	10. Bhagalpur.
0 7 6	0 6	0 7 0	...	...	...	3 13 4	3 13 0	4 2 0	0 4 0	0 4 0	0 4 6	2 8 0	Karkatch. 2 8 0	2 8 0	11. Cuttack.
0 10 8	0 10 8	0 6 0 to 0 9 0	...	...	...	5 8 0	5 0 0	5 0 0	0 5 0	0 5 0	0 5 0	3 4 0	Panga. 3 4 0	3 7 0	12. Ranchi.

R. W. CARLYLE,

Offg. Chief Secretary to the Govt. of Bengal.

GOVERNMENT OF BENGAL, IRRIGATION DEPARTMENT.

Approximate Return of Traffic on the Circular and Eastern Canals for the week ending Saturday, the 10th June 1905, as compared with the corresponding week of the previous year.

Nature of Cargo.	Week ending Saturday, the 10th June 1905.			Week ending Saturday, the 11th June 1904.		
	Number of boats.	Weight of cargo.	Tollage.	Number of boats.	Weight of cargo.	Tollage.
		Mds.	Rs.		Mds.	Rs.
Rice and paddy	540	69,180	1,041	213	*51,586	684
Jute ..	2	2,100	17	13	9,800†	82
Firewood	29	14,930	229	26	24,800	353
Other articles	685	2,24,671	3,013	535	1,65,015	1,953
Total ...	1,256	3,10,881	4,300	786	2,50,701	3,072

* Weight by canal measurement = 1,950 maunds.
† Ditto ditto = 19,565 ,,

Results of the Meteorological Observations taken at the Alipore Observatory from 4th to 10th June 1905.

Month.	Date.	Maximum in sun.	Number of hours of bright sunshine.	Mean pressure barometer at 32° Fahr.	Temperature				Hygrometry				Wind.		Rain.	Weather.
					Mean.	Maximum.	Range.	Minimum	Mean wet bulb.	Vapour tension.	Dew point.	Humidity.	Prevailing direction.	Miles recorded.		
1905.		°		Inches.	°	°	°	°	°	Inch.	°	%			Inches.	
June	4th	149·2	5·8	29·559	88·4	97·8	19·4	78·4	90·2	0·923	76 8	70	W and WNW ...	83	Nil	Partially cloudy, o, ≏, hazy.
,,	5th	145·7	3·5	·548	87·3	96·1	17·0	79 1	81·0	·990	73·9	75	SW by W, S and SSE.	137	,,	Chiefly cloudy, hazy, t, ≺, p, ≁.
,,	6th	144·7	Nil	·585	85·3	96·3	21·4	74·9	80·4	·984	78·7	78	ESE, S and SSE ...	120	0·12	Cloudy, o.
,,	7th	144·7	,,	·567	90·7	98·0	14·1	83·9	85·4	1·157	83·7	81	SSE and S ...	127	Nil	Cloudy o, hazy.
,,	8th	151·2	4·2	·586	89·7	95·9	11·8	84·1	83·8	1 085	81·7	79	S and SSE ...	191	,,	Chiefly cloudy, t, ≺.
,,	9th	149·7	6·7	·610	86·7	95·6	17·3	78·3	80·2	0 950	77·7	74	NNE, S and SSW	154	,,	Partially cloudy.
,,	10th	150·1	9·6	·573	91·0	101·5	20·4	81 1	80·0	·886	75·6	62	SSW and S by W	136	,,	Chiefly clear.

The mean pressure of the seven days		Inches. 29·568
The average pressure of the corresponding period for 24 years, Surveyor-General's Office		29·574
		Hours.
The total number of hours of bright sunshine		29·8
The maximum possible number of hours of sunshine		93·9
The mean temperature of the seven days		° 88·4
The average temperature of the corresponding period for 24 years, Surveyor-General's Office		86·0
The extreme variation of temperature		26·6
The maximum temperature		101·5
		Miles.
The highest velocity of the wind in one hour		17
		%
The mean relative humidity		74
The average relative humidity of the corresponding period for 24 years, Surveyor-General's Office		78
		Inches.
The total fall of rain from 4th to 10th June 1905		0·12
The average fall of the corresponding period for 24 years, Surveyor-General's Office		2·39
The total fall from 1st January to 10th June 1905		21·15
The average fall of the corresponding period for 24 years, Surveyor-General's Office		12·67

The mean pressure, temperature, etc., are deduced from the traces of the Barograph and Thermograph, and from eye observations.

The maximum and minimum temperatures are obtained from self-registering thermometers. All the thermometers are verified and the readings have been corrected to a standard constructed and verified at the Kew Observatory. They are exposed under a thatched shed open at the sides, and are suspended four feet above the ground.

The barometer readings are corrected to those of the standard, Newman's No. 86, formerly at the Surveyor-General's Office.

The hygrometric elements are obtained from Tables III, IV and V of the official tables computed in the Meteorological Office, and based on Regnault's modifications of August's formula.

The directions and the movement of the wind are taken from the trace of a Beckley's anemograph.

The mouth of the rain-gauge is one foot above the ground. Rainfall reported on any day is for 24 hours preceding 8 A.M. of that day.

o, overcast; ≏, dew; t, thunder; ≺, lightning; p, passing temporary showers; ≁, strong wind.

METEOROLOGICAL OFFICE, GOVT. OF INDIA,
Alipore (Calcutta), the 12th June 1905.

G. W. KÜCHLER,
for *Meteorological Reporter to the Govt of India and Director-General of Indian Observatories.*

Abstract of the Results of Meteorological Observations taken at the Alipore Observatory in the month of May 1905.

		Date.	Hour.
	Inches.		
The mean pressure of the month	29·709		
The average pressure of May from 44 years' registers ...	29·658		
The highest pressure in the month	29·904	13th	10
The lowest pressure in the month	29·424	22nd	16
The range of pressure	0·480		
	Hours		
The total number of hours of bright sunshine during the month	244·6		
The maximum possible number of hours of sunshine ...	408·3		
	°		
The mean temperature of the month	85·1		
The average temperature of May from 20 years' registers ...	85 4		
The highest temperature in the month	100·7	23rd	
The lowest temperature in the month	67·4	10th	
The range of temperature during the month	33·3		
The mean daily range of temperature	15·2		
The greatest range of temperature in one day	24·8	23rd	
	Per cent.		
The mean humidity of the month	79		
The average humidity of May from 20 years' registers ...	74		
	Inches.		
The mean vapour tension of the month ...	0 953		
The average vapour tension of May from 20 years' registers ...	0·883		
The mean cloud proportion of the month	5·40		
The average cloud proportion of May from 28 years' registers	4·49		
	Inches.		
The total rainfall of the month	10·01		
The total rainfall indicated by a Beckley's self-registering rain-gauge (mouth of the gauge about 8 feet above the ground)	9·10		
The average fall of May from 24 years' registers ...	5·60		
The greatest fall in 24 hours	3·63	19th	
	Days.		
The number of rainy days in the month	8		
The average number of rainy days in May from 24 years' registers	7		
	°		
The mean maximum equilibrium temperature of solar radiation during the month	146·8		
The mean difference of sun and air temperatures	54·8		
The greatest sun temperature	152·5	23rd	
The greatest excess of sun over air temperature .. .	61·8	13th	
The mean temperature of the nocturnal radiation thermometer on woollen cloth	74·6		
The mean depression of the nocturnal radiation thermometer below the minimum air temperature at 4 feet above the ground	2·2		
The greatest depression of the nocturnal radiation thermometer below the minimum air temperature	4·0	7th	
	Miles.		
The mean movement of the wind per day	150·0		
The greatest movement of the wind in one day	282·0	9th	
The greatest movement of the wind in one hour	27·0	1st 8 to 9 P.M.	

The number of hours with winds from each of the eight points—

N. 18, N.E. 19, E. 67, S.E. 133, S. 358, S.W. 84, W. 21, N.W. 16, Calm 28.

G. W. KÜCHLER,

METEOROLOGICAL OFFICE, GOVT. OF INDIA,
Alipore (Calcutta), the 12th June 1905.

for *Meteorological Reporter to the Govt. of India and Director-General of Indian Observatories.*

Divisions.	Districts.	Population under registration.	Births.		Deaths.																Average of corresponding month of previous five years.		Remarks.
					Cholera.		Small-pox.		Plague.		Fever.		Dysentery and Diarrhœa.		Respiratory diseases.		Injury.		Other causes.		Total of all causes.				
			Number registered.	Ratio per 1,000 of population per annum.	Number registered.	Ratio per 1,000 of population per annum.	Number registered.	Ratio per 1,000 of population per annum.	Number registered.	Ratio per 1,000 of population per annum.	Number registered.	Ratio per 1,000 of population per annum.	Number registered.	Ratio per 1,000 of population per annum.	Number registered.	Ratio per 1,000 of population per annum.	Number registered.	Ratio per 1,000 of population per annum.	Number registered.	Ratio per 1,000 of population per annum.	Number registered.	Ratio per 1,000 of population per annum.	Number registered.	Ratio per 1,000 of population per annum.	
1	2	3	4	5	6	7	8	9	10	11	12	13	14	15	16	17	18	19	20	21	22	23	24	25	26
Burdwan	Burdwan	1,532,475	5,467	42·96	507	3·96	24	·12	14	·10	2,580	22·44	103	·72	9	·06	26	·12	823	6·60	4,416	34·56	4,429	34·56	
	Birbhum	902,280	2,676	32·88	311	4·08	6	·07	...	...	1,477	19·36	4	·04	15	·12	11	·12	337	4·44	2,161	28·68	2,053	27·24	
	Bankura	1,176,411	4,569	49·08	275	2·88	23	·12	1	·009	2,077	22·32	53	·48	1	·009	10	·09	641	9·00	3,280	35·16	2,746	29·40	
	Midnapore	2,789,114	8,387	35·64	716	3·00	72	·24	5	·01	4,849	20·76	146	·60	11	·03	19	·07	1,299	5·52	7,117	30·60	6,782	37·68	
	Hooghly, including Serampore.	1,049,282	3,763	42·96	179	1·92	2	·01	116	1·32	2,013	22·92	157	1·68	34	·36	29	·24	519	5·88	3,048	34·80	3,421	39·12	
	Howrah	850,514	2,689	37·92	291	4·08	6	·08	281	3·96	879	12·36	247	3·48	21	·24	65	·84	586	8·16	2,376	33·48	2,707	38·16	
	24-Parganas	2,078,369	6,884	39·72	662	3·72	4	·01	91	·48	2,942	16·92	126	·72	46	·24	50	·24	681	3·84	4,662	26·52	5,631	32·40	
	Calcutta	847,796	1,456	20·59	214	3·00	43	·60	2,053	29·04	515	7·20	231	3·24	327	4·56	41	·48	862	12·24	4,292	60·72	5,210	73·68	
Presidency	Nadia	1,067,491	6,966	49·39	28	·12	23	·12	4	·02	2,847	25·56	15	·12	...	...	18	·10	586	5·16	3,739	33·72	3,882	34·92	
	Murshidabad	1,353,184	5,292	47·28	263	2·28	35	·24	...	...	3,558	25·68	5	·02	3	·01	35	·12	551	3·60	4,528	29·88	5,330	35·28	
	Jessore	1,813,155	5,851	38·64	36	·12	...	...	...	...	3,803	12·36	10	·08	1	·008	24	·12	733	6·96	2,122	20·28	3,186	29·88	
	Khulna	1,233,043	4,770	45·60	44	·36	1	·008	...	...	1,301	27·36	9	·07	2	·01	24	·12	419	3·36	3,808	31·20	4,207	34·92	
	Rajshahi	1,482,467	6,382	52·32	12	·09	...	...	...	...	3,342	27·36	1	·007	1	·007	11	·08	305	2·28	4,274	32·64	5,764	44·04	
	Dinajpur	1,567,690	8,461	64·68	...	...	19	·12	...	...	3,267	30·12	1	·007	...	...	14	·12	86	1·20	1,848	23·52	2,624	36·84	
Rajshahi	Jalpaiguri	787,380	2,406	36·60	1	·01	3	·03	...	...	1,466	21·56	30	·48	...	...	5	·24	107	5·04	550	26·40	780	37·80	
	Darjeeling	249,127	727	34·92	...	...	2	·09	...	...	414	19·92	22	·96	...	...	1	·06	237	1·32	4,840	26·88	5,645	31·44	
	Rangpur	2,154,151	9,098	50·64	18	·24	5	·02	...	...	4,583	25·44	20	·24	...	...	11	·12	163	9·28	1,029	27·40	1,897	26·52	
	Bogra	854,533	3,829	53·76	16	·12	9	·12	...	...	1,448	20·28	11	·08	3	·02	13	·12	205	1·56	3,278	27·60	3,640	30·72	
	Pabna	1,420,481	4,454	37·56	93	·36	143	·60	...	...	5,284	15·96	117	·48	16	·07	23	·10	1,672	4·80	4,999	22·68	7,347	33·24	
	Dacca	2,644,435	10,590	48·00	211	·60	29	·08	...	...	5,169	15·84	28	·08	3	·008	27	·07	1,270	3·84	6,737	20·64	7,791	23·88	
Dacca	Mymensingh	3,915,668	14,576	44·64	211	·60	29	·08	...	...	3,198	19·68	72	·36	...	...	58	·24	744	4·56	4,116	25·32	6,593	40·68	
	Faridpur	1,942,733	7,108	45·80	361	1·80	7	·03	...	...	2,668	13·92	18	·08	3	·01	93	·48	1,535	7·92	4,684	24·48	6,904	36·12	
	Backergunge	2,291,732	9,067	47·16	63	·24	...	...	...	...	2,737	15·60	53	·12	1	0·04	33	·12	774	4·32	3,660	20·64	4,762	26·64	
	Tippera	2,117,991	7,927	44·88	32	·24	10	·09	...	...	1,598	16·68	1	·009	...	...	55	·48	404	4·20	2,161	22·08	3,135	33·12	
Chittagong	Noakhali	1,341,728	4,576	48·00	23	·12	23	·12	...	...	2,403	22·08	16	·12	...	...	76	·60	180	1·56	2,850	25·32	3,192	28·20	Not under registration.
	Chittagong	1,353,250	4,757	42·12	93	·48	...	...	...	...	...	...	...	...	...	...	...	...	...	...	...	...	...	...	
	Chittagong Hill Tracts	...	...	...	...	...	...	...	...	...	...	...	...	...	...	...	...	...	...	...	...	...	...	...	
Patna	Patna	1,624,985	5,249	38·76	18	·12	33	·24	7,779	57·36	3,233	22·32	51	·24	27	·12	69	·36	764	4·56	11,454	67·80	7,965	46·32	
	Gaya	2,089,623	7,491	43·56	6	·02	10	·04	6,874	39·96	3,748	22·92	7	·03	4	·02	47	·24	944	5·16	9,781	59·76	5,164	31·56	
	Shahabad	1,962,936	7,008	42·84	...	...	6	·02	10,051	50·04	2,823	14·28	224	1·08	62	·24	76	·36	2,779	13·80	16,051	79·92	10,527	52·56	
	Saran	2,400,869	9,508	47·40	...	...	11	·07	5	·02	1,933	12·84	7	·03	1	·006	45	·24	739	4·92	2,741	18·36	3,866	25·44	
	Champaran	1,790,403	5,324	35·64	...	...	42	·12	1,380	6·00	4,254	18·24	47	·12	4	·01	26	·09	1,196	4·44	6,849	28·20	7,139	29·52	
	Muzaffarpur	2,754,790	9,618	41·88	...	...	23	·08	942	3·84	4,631	19·20	64	·24	1	·005	45	·24	1,736	9·96	9,028	52·32	5,923	34·32	
	Darbhanga	2,912,811	9,206	37·92	6	·02	23	·08	942	3·84	4,631	19·20	18	·09	10	·04	45	·24	1,736	9·96	9,028	52·32	5,923	34·32	
	Monghyr	2,068,804	7,394	42·84	3	·01	25	·12	4,249	24·60	3,844	20·76	41	·12	3	·01	27	·12	540	3·00	5,535	30·60	4,676	26·28	
Bhagalpur	Bhagalpur	2,068,853	6,813	39·12	5	·02	37	·12	988	5·28	4,190	26·76	3	·01	...	...	26	·12	218	1·32	4,512	28·80	6,605	42·24	
	Purnea	1,874,704	7,513	49·92	3	·01	78	·48	...	...	1,404	18·96	2	·02	...	...	8	·10	296	3·96	1,715	23·76	2,148	29·04	
	Malda	884,930	3,963	53·28	2	·02	3	·03	...	...	2,679	17·76	32	·12	2	·01	13	·08	355	2·28	3,168	21·00	2,739	18·12	
	Santhal Parganas	1,800,787	5,898	33·64	75	·48	10	·06	2	·01	2,680	12·00	576	3·24	58	·24	78	·36	1,728	9·96	4,783	27·72	6,545	38·04	
	Cuttack	2,382,758	7,977	46·32	247	1·32	10	·04	6	·02	1,619	11·40	196	2·04	...	...	25	·24	1,269	14·16	2,851	31·92	3,198	35·76	
Orissa	Balasore	1,071,197	4,106	45·96	345	3·84	4	·03	...	...	656	7·68	258	3·00	105	1·20	27	·24	950	11·16	2,469	28·32	3,114	36·72	Not under registration.
	Puri	1,017,284	3,969	39·60	254	2·76	179	2·04	...	...	...	...	...	...	...	...	...	...	...	...	...	...	...	...	
	Angul and Khondmals	...	...	...	...	...	...	...	...	...	...	...	...	...	...	...	...	...	...	...	...	...	...	...	
Chota Nagpur.	Hazaribagh	1,177,961	5,067	51·60	14	·12	...	...	97	·96	1,878	19·08	23	·12	...	...	28	·24	571	5·76	2,611	26·52	2,327	23·64	
	Ranchi	1,147,925	4,802	43·44	...	...	1	·009	...	...	1,520	15·24	66	·60	2	·01	24	·24	732	7·32	2,345	23·64	2,366	25·16	
	Palamau	619,000	2,820	54·60	...	...	...	...	98	1·80	1,306	25·20	3	·04	4	·07	19	·36	348	6·72	1,778	34·32	1,441	27·84	
	Manbhum	1,301,364	3,985	36·24	372	3·36	...	...	...	...	2,164	19·92	33	·24	3	·02	27	·24	528	4·80	3,127	28·80	2,387	21·48	
	Singhbhum	623,579	2,249	43·92	29	·48	...	...	...	...	871	16·92	20	·36	...	...	23	·36	151	2·88	1,094	21·36	1,132	22·08	
	Total	74,428,193	270,958	43·68	5,796	·84	983	·12	40,101	6·36	117,966	18·96	3,578	·48	971	·12	1,558	·24	34,643	5·52	205,596	33·12	213,110	34·32	
	Average of corresponding month of previous five years	.....	278,807	44·88	14,824	2·28	4,618	·72	Data not available.		136,331	21·96	4,659	·72	Data not available.		1,607	·24	40,1[illegible]	6·48	213,110	34·32	...	...	
	Difference + or −	.....	−7,849	−1·20	−9,028	−1·44	−3,635	−·60			−18,365	−3·00	−1,081	−·—			−49	Equal	−5,552	−·96	−7,514	−1·20	...	...	

Office of Sanitary Commissioner for Bengal,
The 10th June 1905.

W. W. Clemesha, Captain, I.M.S.,
Offg. Sanitary Commissioner for Bengal.

Vital Statistics of Towns in Bengal with a population of 20,000 and over during the month of March 1905.

Districts.	Towns	Population under registration	BIRTHS.		DEATHS.																AVERAGE OF CORRESPONDING MONTH OF PREVIOUS FIVE YEARS.		Remarks.
					CHOLERA.		SMALL-POX.		PLAGUE.		FEVER.		DYSENTERY AND DIARRHŒA.		RESPIRATORY DISEASES.		INJURY.		OTHER CAUSES.		TOTAL OF ALL CAUSES.				
			Number registered.	Ratio per 1,000 of population per annum.	Number registered.	Ratio per 1,000 of population per annum	Number registered.	Ratio per 1,000 of population per annum	Number registered.	Ratio per 1,000 of population per annum	Number registered.	Ratio per 1,000 of population per annum	Number registered.	Ratio per 1,000 of population per annum.	Number registered.	Ratio per 1,000 of population per annum.	Number registered.	Ratio per 1,000 of population per annum.	Number registered.	Ratio per 1,000 of population per annum.	Number registered.	Ratio per 1,000 of population per annum.	Number registered.	Ratio per 1,000 of population per annum.	
1	2	3	4	5	6	7	8	9	10	11	12	13	14	15	16	17	18	19	20	21	22	23	24	25	26
Burdwan	1. Burdwan	28,022	30	17·04	26	8·80					53	18·12	23	7·80	2	·60			12	4·08	116	39·72	108	36·96	
Bankura	2. Bankura	20,737	54	31·20	2	1·08	1	·48			19	10·22	4	2·28					14	8·04	40	23·04	87	39·88	
Midnapore	3. Midnapore	33,146	132	47·76							61	22·08	10	3·60					36	12·96	107	38·64	117	42·36	
Hooghly	4. Hooghly and Chinsura	29,353	96	39·96	24	9·72			87	35·52	62	21·12	13	5·28	3	1·20	3	1·20	14	5·64	196	80·04	118	48·12	
Howrah	5. Serampore	44,451	73	19·68	4	·96			3	·76	45	12·12	16	4·20					18	3·12	80	21·48	141	38·04	
	6. Howrah	157,594	236	25·56	57	6·60	4	·24	251	19·08	228	17·28	64	4·80	11	·72	39	2·88	152	11·52	836	63·60	715	54·36	
24-Parganas	7. Cossipore-Chitpur	40,750	64	15·84	6	1·68					18	5·28	2	·48					2	·48	28	8·16	64	18·84	
	8. Manicktala	32,357	50	14·76	9	3·24					17	6·24	6	2·16					5	1·80	37	13·68	53	19·56	
	9. South Suburban	26,574	80	36·36	1	·36					26	11·76	2	·84					9	4·08	38	17·28	87	39·48	
	10. Garden Reach	28,211	44	18·60	14	5·88			1	·36	27	11·40	4	1·68			1	·36	7	2·88	54	22·92	53	22·44	
	11. Bernagore	24,433	32	15·00	13	5·64	2	·84	15	6·96	20	23·52	2	·84					2	·84	83	39·12	76	35·76	
	12. Bhatpara	21,640	57	20·52	20	11·04					19	10·56	11	6·12					6	3·24	56	31·08	66	36·72	
Calcutta	13. Calcutta	847,798	1,456	20·52	214	3·00	43	·60	2,063	29·04	515	7·20	231	3·24	327	4·56	41	·48	863	12·24	4,228	60·72	5,210	73·68	
Nadia	14. Krishnagar	24,547	60	29·28	2	·96	1	·48			14	6·84	2	·96					8	3·84	27	13·08	76	37·08	
	15. Santipur	26,996	121	53·88					1	·36	49	21·84	2	·84	2	·84	2	·84	13	5·76	69	30·72	94	41·88	
Murshidabad	16. Berhampore	34,397	60	29·40							51	25·08	3	1·44	1	·48			2	·96	57	27·96	71	34·92	
Rajshahi	17. Rampur Boalia	21,589	62	34·44							29	16·08	4	2·16	1	·48			13	7·20	47	26·04	56	31·08	
Pabna	18. Sirajganj	23,114	79	40·92							46	23·88	1	·48	1	·48	2	·96	4	2·04	54	27·96	34	17·64	
Dacca	19. Dacca	90,542	243	32·16	5	·60	29	3·84			102	13·44	12	1·56			1	·12	85	11·16	224	30·96	230	30·48	
	20. Narayanganj	24,473	73	35·76							13	5·88	2	·96			2	·96	11	5·28	27	13·20	39	19·08	
Chittagong	21. Chittagong	22,140	15	8·04	7	3·72					20	10·50							4	2·16	31	16·80	35	18·96	
Patna	22. Patna City	134,785	310	27·48	10	·84	8	·60	984	87·60	115	9·60	41	3·60	14	1·20	4	·24	183	16·20	1,359	120·96	927	82·44	
	23. Bihar	45,063	143	38·04	1	·24			225	60·60	40	10·56	4	·96	3	·72	1	·24	58	15·36	335	89·16	361	96·12	
	24. Dunapore	23,690	54	19·20	1	·24			104	36·96	17	6·00	1	·24			2	·60	22	10·32	154	54·72	309	109·92	
Gaya	25. Gaya	71,288	139	23·28	4	·60	3	·48	636	107·04	305	51·24	23	5·52	17	2·76	4	·60	104	17·40	1,196	186·12	645	108·48	
Shahabad	26. Arrah	46,170	81	21·00			1	·24	313	81·24	14	3·60					2	·48	12	3·00	342	88·80	421	109·32	
	27. Sasaram	22,644	67	35·96					23	11·64	50	25·32	1	·48	1	·48			8	3·96	83	42·12	48	24·36	
Saran	28. Chapra	45,901	143	37·32					189	41·76	89	12·96	47	12·24			3	·72	100	26·04	369	94·08	257	67·08	
Champaran	29. Bettiah	24,696	76	37·80			1	·48			42	10·68							18	8·64	41	19·92	52	25·20	
Muzaffarpur	30. Muzaffarpur	45,617	91	23·88					332	87·24	34	6·24	1	·24					59	15·48	416	109·32	160	42·00	
	31. Hajipur	21,398	59	49·80					220	128·88	25	13·92	4	2·16					41	22·92	300	168·24	268	150·24	
Darbhanga	32. Darbhanga	66,344	204	36·84					278	50·28	33	5·88	14	2·52	1	·12	1	·12	130	23·52	487	88·68	43	7·76	
Monghyr	33. Monghyr	35,880	133	45·12	2	·60			131	43·80	16	5·28	4	1·32	5	1·56	3	·96	54	18·72	217	72·48	257	85·92	
Bhagalpur	34. Bhagalpur	78,760	169	26·76			6	·84	155	24·48	67	10·56	1	·12			2	·24	58	9·12	289	45·72	281	44·40	
Cuttack	35. Cuttack	51,364	99	23·04					1	·12	28	6·48	10	2·28					35	8·16	74	17·28	101	23·52	
Balasore	36. Balasore	20,880	61	35·04							11	6·24	5	2·76					20	11·40	43	24·60	58	33·24	
Puri	37. Puri	49,334	51	12·36	3	·72	1	·24			31	7·44	17	4·08	4	·96	3	·72	34	8·16	93	22·56	158	38·40	
Ranchi	38. Ranchi	23,610	52	26·16							11	5·52							8	3·96	19	9·48	26	13·08	
	Total of all towns with a population of 20,000 and over	2,416,049	5,185	25·56	461	2·28	100	·48	5,986	29·64	2,512	11·40	597	2·88	392	1·92	117	·48	2,232	11·04	12,197	60·48	12,248	64·72	
	Average of the corresponding month of previous five years	.....	4,558	22·56	706	3·48	281	1·32	Data not available		3,283	16·08	755	3·84	Data not available		89	·36	3,916	19·44	12,242	60·72	...	...	
	Difference + or −	.....	+627	+3·00	−245	−1·20	−181	−·84			−940	−4·68	−158	−·96			+28	+·12	−1,684	−8·40	−45	−·24	...	...	

OFFICE OF SANITARY COMMISSIONER FOR BENGAL,
The 10th June 1905

W. W CLEMESHA, CAPTAIN, I.M.S.,
Offg Sanitary Commissioner for Bengal

EAST INDIAN RAILWAY.

Statement of Goods Traffic in staples carried during the four weeks ending 25th March 1905 as compared with the same period of 1904.

Staples.	1904.		1905.		Increase.		Decrease.	
	Weight.	Freight	Weight.	Freight.	Weight.	Freight.	Weight.	Freight.
	Mds.	Rs.	Mds.	Rs.	Mds.	Rs.	Mds.	Rs.
Apparel, including drapery, haberdashery, millinery, uniforms, accoutrements, boots and shoes	5,600	5,989	3,965	4,383	.....	.....	1,635	1,606
Coal and coke carried for the public and foreign railways	1,33,99,109	15,67,605	1,34,91,786	17,40,826	10,94,677	1,62,131	.....	.....
Cotton—								
(1) Raw	73,379	33,874	1,75,734	95,527	1,02,355	61,953	.....	.....
(2) Manufactured—								
(a) Twist and Yarn, European	1,946	2,393	2,181	2,729	235	346	.....	.....
(b) Ditto, Indian	29,329	9,744	35,085	15,314	5,756	5,570	.....	.....
(c) Piece-goods, European	1,06,083	1,10,978	1,48,708	1,45,904	42,625	34,926	.....	.....
(d) Ditto, Indian	12,247	6,778	33,616	8,998	21,369	2,220	.....	.....
(e) Others	2,074	1,676	2,948	2,787	874	1,111	.....	.....
Chemicals, excepting saltpetre	4,500	3,137	6,187	3,798	1,687	641	.....	.....
Drugs—								
1.—Intoxicating, other than opium	163	104	190	217	27	113	.....	.....
2.—Non-intoxicating	9,751	4,490	7,876	4,358	.....	.....	1,875	135
Dyes and Tans—								
1.—Al (Morinda citrifolia)	.....	.....	122	21	122	21	.....	.....
2.—Alizarine and aniline dyes	228	177	199	125	.....	.....	29	52
3.—Cutch	2,381	933	2,338	1,027	.....	94	143	.....
4.—Indigo	4,025	2,316	1,001	796	.....	.....	3,024	1,520
5.—Myrabolams	14,437	3,385	19,312	4,920	4,875	1,735	.....	.....
6.—Tanning barks	17,154	1,178	23,870	1,703	6,716	525	.....	.....
7.—Turmeric	16,408	9,856	16,602	12,707	194	3,851	.....	.....
8.—Others	19,071	5,950	11,422	5,956	.....	6	16,189	.....
Fodder—								
1.—Oilcake	48,286	9,039	72,377	12,253	24,091	2,854	.....	.....
2.—Hay, straw and grass	29,192	8,023	42,813	5,438	13,121	2,415	.....	.....
Fruits and vegetables, fresh	6,535	3,630	15,008	6,443	8,583	2,813	.....	.....
Grain and Pulse—								
1.—Wheat	9,09,249	2,55,375	5,95,355	1,63,308	.....	.....	3,13,894	92,067
2.—Wheat flour	70,030	14,105	97,788	22,117	27,726	7,982	.....	.....
3.—Rice in the husk	59,732	6,615	50,914	5,743	.....	.....	38,818	872
4.—Rice not in the husk	4,47,984	51,228	6,30,258	94,930	1,82,274	43,702	.....	.....
5.—Jowar and bajra	6,600	688	73,279	8,765	66,679	8,077	.....	.....
6.—Gram and pulse	5,81,377	1,56,781	5,92,295	1,47,407	10,918	.....	.....	3,264
7.—Others	61,276	9,933	1,09,072	21,562	47,796	11,630	.....	.....
Hides and Skins—								
1.—Hides of cattle	53,294	29,120	1,03,326	64,920	50,032	35,800	.....	.....
2.—Skins of sheep, &c.	29,466	10,707	43,434	24,356	13,948	7,649	.....	.....
Horns	826	442	565	210	.....	.....	261	232
Hemp (Indian) and other fibres (excluding jute)	81,886	16,085	1,02,988	31,421	21,100	15,336	.....	.....
Jute—								
1.—Raw	1,35,711	21,056	70,821	11,276	.....	.....	64,890	9,780
2.—Gunny-bags and cloth	1,41,557	35,945	1,30,470	77,457	.....	.....	11,087	8,488
Lac	24,040	13,751	38,131	21,328	14,091	7,577	.....	.....
Leather—								
1.—Unwrought	2,069	3,970	2,711	4,011	642	41	.....	.....
2.—Wrought, excepting boots and shoes	755	775	1,429	1,569	674	794	.....	.....
Liquors—								
1.—Ale and Beer	13,254	4,529	14,704	4,583	1,450	54	.....	.....
2.—Spirits, of all kinds, including country spirit	5,248	6,163	5,587	7,778	639	1,615	.....	.....
3.—Wines	.....	.....	.....	.....	.....	.....	.....	.....
4.—All other sorts, including toddy and fermented liquor, other than ale and beer	509	109	874	190	374	90	.....	.....
Metals—								
1.—Brass, unwrought	4,850	1,336	4,364	3,047	.....	1,721	486	.....
2.— Do., wrought	15,802	7,527	13,649	6,220	.....	.....	2,153	1,307
3.—Copper, unwrought	1,777	2,153	515	375	.....	.....	1,262	1,778
4.— Do., wrought	3,171	3,734	2,091	1,753	.....	.....	1,080	1,981
5.—Iron and steel—								
(a) Cast	27,696	9,565	47,231	18,969	19,535	9,404	.....	.....
(b) Unwrought	1,13,414	4,845	1,27,715	6,659	14,301	1,814	.....	.....
(c) Wrought	98,148	40,727	1,38,874	47,552	40,126	6,825	.....	.....
(d) Manufactures of iron and steel	25,193	11,264	34,774	15,801	9,582	4,537	.....	.....
6.—Zinc and spelter	4,373	2,622	3,936	1,632	.....	.....	1,437	990
7.—Others	7,764	6,361	12,307	9,461	4,543	3,100	.....	.....
Oils—								
1.—Kerosine	1,75,542	89,746	2,46 068	83,014	70,526	23,268	.....	.....
2.—Castor	4,003	1,631	3,960	1,273	.....	.....	113	361
3.—Cocoanut	2,238	988	4,490	1,553	2,252	565	.....	.....
4.—Mustard and rape	5,513	2,117	13,996	4,381	7,484	2,264	.....	.....
5.—Others	3,780	2,141	4,192	3,391	406	1,250	.....	.....
Oilseeds—								
1.—Castor	56,958	12,763	58,924	18,659	1,966	5,896	.....	.....
2.—Earthnuts	293	46	624	116	330	70	.....	.....
3.—Linseed	1,42,900	30,333	1,27,453	31,103	.....	.....	15,447	3,236
4.—Poppy	6,197	1,477	8,577	2,109	2,380	632	.....	.....
5.—Rape and mustard	4,57,891	1,07,196	3,02,253	72,713	.....	.....	1,55,659	34,484
6.—Til or jinjli	43,353	29,017	25,673	6,621	.....	.....	16,610	22,396
7.—Others	58,937	15,913	75,381	15,003	16,444	1,090	.....	.....
Opium	86,608	64,001	4,659	4,505	.....	.....	62,009	59,586
Paper and pasteboard	12,293	14,797	17,306	12,496	5,014	.....	.....	2,301
Provisions—								
1.—Dried fruits and nuts	12,799	7,291	11,678	6,149	.....	.....	721	1,142
2.—Ghee	40,885	35,890	53 886	40,152	12,006	4,262	.....	.....
3.—Potatoes	1,11,708	17,232	1,67,936	26,705	56,218	9,473	.....	.....
4.—Others	70,466	29,476	49,402	30,447	.....	.....	21,064	9,029
Railway plant & rolling-stock carried for the public & foreign railways—								
1.—Locomotives, engines and tenders and parts thereof	6,375	1,009	334	305	.....	.....	6,041	704
2.—Carriages and trucks and parts thereof	469	88	25	18	.....	.....	443	70
3.—Materials—								
(a) Steel rails and fish-plates	1,17,069	23,713	91,731	30,209	.....	6,496	25,338	.....
(b) Sleepers and keys of steel and cast-iron	.....	.....	15,634	3,180	15,634	3,180	.....	.....
(c) Other sorts	3,48,240	56,515	4,61,567	82,648	1,13,327	16,130	.....	.....
Coal	3,43,901	60,814	3,30,559	67,528	.....	714	13,212	.....

Staples.	1904.		1905.		Increase.		Decrease.	
	Weight.	Freight.	Weight.	Freight.	Weight.	Freight.	Weight.	Freight.
	Mds.	Rs.	Mds.	Rs.	Mds.	Rs.	Mds.	Rs.
Saltpetre and other saline substances—								
1.—Saltpetre	78,677	39,645	37,525	16,138			41,152	13,507
2.—Other saline substances	38,853	10,892	48,516	13,578	9,663	2,686		
Silk—								
1.—*Raw—*								
(a) Foreign	.....	.....			.....	.....	.....	
(b) Indian	1,434	712	3,915	2,000	2,481	1,288		
2.—*Piece-goods—*								
(a) Foreign	.....	.....	.....	.....	.....	.....	.....	.....
(b) Indian	204	318	285	541	81	223	.....	.....
Spices—								
1.—Betelnuts	26,519	19,042	26,512	22,092	.....	3,050	27	.....
2.—Cardamoms	954	1,001	1,083	925	129	.....	.....	76
3.—Chillies	53,081	30,259	54,427	3,458	1,346	199		
4.—Ginger	1,394	497	3,536	1,336	2,142	841		
5.—Pepper	2,775	2,424	2,470	2,643	.....	219	305	
6.—Others	14,463	6,735	25,251	15,925	10,788	9,140		
Stone and lime	6,35,176	85,071	6,55,371	92,472	33,195	7,401	.....	
Sugar—								
1.—Refined	35,258	32,473	37,752	3,465			27,506	2,068
2.—Unrefined—								
(a) Sugar	1,51,995	56,984	1,76,184	45,675	24,189	.....	.....	11,309
(b) *Gur*, *rab*, jaggree, molasses and other saccharine produce	3,15,281	65,039	5,43,380	77,039	2,28,099	12,000	.....	.....
Tea—								
1.—Foreign	3,107	2,113	2,957	2,486	.....	373	150	.....
2.—Indian	53,390	24,052	51,956	24,143	.....	91	434	.....
Tobacco	58,300	24,052	51,956	24,143	.....	91	434	.....
Wood—								
1.—Timber, unwrought	1,17,906	18,992	1,60,561	22,630	42,655	3,638	.....	.....
2.—Manufactures	13,877	4,461	16,704	7,019	2,827	2,558		.....
Wool—								
1.—Raw	3,678	2,649	3,074	2,899	.....	250	604	.....
2.—Manufactured—								
(a) Carpets and rugs	771	927	2,207	1,707	1,436	780		
(b) Piece-goods, European	.....	.....	1,421	793	1,421	793	.....	.....
(c) Ditto, Indian	277	271	761	544	484	273	.....	.....
(d) Other sorts of manufactures	2,388	904	1,330	938	.....		1,058	36
All other articles of merchandise—								
1.—Bones	31,618	7,925	84,808	26,322	53,190	18,397	.....	.....
2.—Firewood	84,303	5,217	1,03,521	6,239	19,219	1,022	.....	.....
3.—Indigo seed	5,421	1,200	7,324	1,347	1,903	147	.....	.....
4.—Paints and colours	1,113	961	1,471	1,616	359	655	.....	.....
5.—Seeds other than oilseeds	2,596	611	4,109	693	1,513	.....	.....	8
6.—Others	8,07,611	2,92,124	12,18,983	2,77,796	3,51,372		.....	14,329
Total	2,03,03,238	38,81,640	2,25,18,959	41,42,333	21,25,73[illegible]	2,90,674	.....	.....
Military stores	27,843	25,550	48,446	26,949	20,603	58,399	.....	.....
Coal for railway	13,97,082	1,01,051	12,13,125	93,353	.....	.....	1,53,957	8,698
Railway materials	34,67,067	77,345	26,36,415	93,856	.....	16,511	8,30,652	.....
Livestock	.....	9,375	.....	7,216	.....	...	.....	16,041
Total	2,50,35,230	40,67,870	2,64,16,945	44,03,215	13,31,715	3,40,345	... ..	.....

J. E. P. Hore,
for *Chief Auditor.*

Traffic Audit Office, Goods Division, Calcutta, *the 10th June 1905.*

Weekly Return of Traffic Receipts on Indian Railways.

EAST INDIAN RAILWAY.

Approximate Return of Traffic for week ended 27th May 1905 on 1,962·25 miles open.

	Coaching Traffic.		Merchandise and Mineral Traffic.		Other earnings (estimated).	Total earnings.	Traffic Train-miles run.		
	No. of passengers.	Coaching Receipts.	Weight carried.	Receipts.			Coaching.	Merchandise.	Total.
		Rs. A. P.	Mds. S.	Rs. A. P. (a)	Rs. A. P.	Rs. A. P.			
Total traffic for the week	435,268	2,89,102 0 0	65,02,302 0	11,56,189 0 0	30,153 0 0	15,75,444 0 0	118,618	184,687	303,305
Or per mile of railway	.....	198 4 8	.....	589 3 6	15 5 10	802 14 0	.....	.....	.....
For previous 20 weeks of half-year	8,328,446*	*81,54,994 0 0	13,01,22,481 0†	2,15,86,535 0 0†	6,33,460 0 0‡	3,03,74,989 0 0	2,353,888§	3,581,161§	5,915,049
Total for 21 weeks ...	8,763,714	85,44,096 0 0	13,66,24,783 0	2,27,42,724 0 0	6,63,613 0 0	3,19,50,433 0 0	2,452,506	3,765,848	6,218,354
COMPARISON.									
Total for corresponding week of previous year.	416,548	4,01,727 1 0	63,78,494 0	12,25,766 9 1	34,796 2 6	16,62,289 12 7	115,740	216,047	331,7
Per mile of railway corresponding week of previous year.	.....	207 10 7	.....	633 10 3	17 15 10	859 4 8	.....	.....	.....
Total for corresponding 21⅞ weeks of previous year.	9,071,071	87,08,769 13 8	13,74,77,526 30	2,26,43,970 7 5	6,77,825 13 8	3,20,90,566 2 9	2,414,079	4,085,377	6,499,456

(a) The decrease is chiefly in grain and seed traffic.
* Added No. of passengers 14,200 and Rs. 9,446 } On account of difference between the approximate and audited figures for the week ended
† Deducted Mds. 1,04,341 and ,, 5,950 } 15th April 1905.
‡ Deducted ,, 2,402
§ Audited figures up to 15th April 1905.

1905. *Abstract of progressive weekly returns of all earnings for 1905 in comparison with 1904.*

Open mileage.	Period.	Coaching Traffic.		Merchandise and Mineral Traffic.		Other earnings.	Total.	Per mile of Railway.	Train mileage.	
		No. of passengers.	Rs.	Mds.	Rs.	Rs.	Rs.	Rs.	No.	Rate. Rs. A. P.
*1,932·87	Week ended 7th Jan. ...	372,540	3,90,660	66,67,706	11,43,288	30,547	15,64,495	809	297,843	5 4 1
*1,932·87	,, ,, 14th ,, ...	368,534	4,00,134	61,44,640	11,54,831	30,874	16,85,839	820	307,865	5 2 5
*1,932·87	,, ,, 21st ,, ...	381,101	4,27,893	69,60,443	11,86,526	34,487	16,48,906	853	309,187	5 5 4
*1,932·87	,, ,, 28th ,, ...	387,648	3,76,282	71,66,889	11,58,573	32,327	15,67,182	811	302,017	5 3 0
*1,932·87	,, ,, 4th Feb. ...	397,461	3,96,662	64,99,831	10,85,994	32,929	15,15,585	784	296,579	5 1 9
*1,932·87	,, ,, 11th ,, ...	416,257	4,32,252	57,34,068	9,76,832	32,929	14,42,013	746	281,543	5 1 11
*1,932·87	,, ,, 18th ,, ...	401,777	3,86,209	66,57,714	10,17,406	31,113	14,34,728	742	286,801	5 0 0
*1,932·87	,, ,, 25th ,, ...	468,547	4,37,133	73,81,370	11,52,050	32,763	16,21,946	839	294,820	5 8 0
*1,932·87	,, ,, 4th Mar. ...	494,324	4,60,897	67,71,733	10,55,343	33,426	15,49,663	795	283,441	5 7 6
*1,940·66	,, ,, 11th ,, ...	480,289	4,71,986	66,09,797	10,04,143	32,597	15,08,726	769	293,617	5 2 3
*1,962·25	,, ,, 18th ,, ...	427,637	4,41,117	67,26,120	11,73,578	30,761	16,45,456	839	292,157	5 10 1
*1,962·25	,, ,, 25th ,, ...	399,793	3,93,260	64,33,977	11,04,848	31,257	15,29,365	778	301,334	5 1 1
*1,962·25	,, ,, 1st April ...	409,494	4,15,071	67,83,703	10,98,292	29,755	15,43,118	787	302,951	5 1 6
*1,962·25	,, ,, 8th ,, ...	393,234	4,13,805	61,83,148	9,89,985	30,814	14,04,104	716	297,383	4 11 7
*1,962·25	,, ,, 15th ,, ...	428,107	3,84,593	57,61,038	9,28,833	29,780	13,43,204	684	291,439	4 9 2
1,962·25	,, ,, 22nd ,, ...	417,335	4,04,497	62,71,072	9,70,370	31,196	14,07,063	717	283,130	4 15 6
1,962·25	,, ,, 29th ,, ...	394,691	3,84,250	67,87,065	11,32,793	32,090	15,30,342	784	288,562	5 5 4
1,962·25	,, ,, 6th May ...	403,716	3,69,243	62,99,496	11,04,167	31,805	15,05,215	767	303,790	4 15 3
1,962·25	,, ,, 13th ,, ...	418,436	3,83,435	62,32,461	10,62,023	30,905	14,76,363	752	298,043	4 15 3
1,962·25	,, ,, 20th ,, ...	429,505	3,88,006	64,50,000	11,27,128	30,905	15,46,039	788	302,549	5 1 9
1,962·25	,, ,, 27th ,, ...	435,268	3,89,102	65,02,302	11,56,189	30,153	15,75,444	803	303,305	5 3 1
	Totals up to date ...	8,763,724	85,44,096	13,66,24,783	2,27,42,724	6,63,613	3,19,50,433	775	6,218,354	5 2 3

Abstract of progressive weekly returns of all earnings for 1905 in comparison with 1904—concluded. *1904.*

		No. of passengers.	Rs.	Mds.	Rs.	Rs.	Rs.	Rs.	No.	Rate. Rs. A. P.
1,931·49	First 9 days of Jan. ...	461,139	4,58,415	79,11,018	12,96,312	36,684	17,91,411*	926	378,822	4 11 8
1,934·49	Week ended 16th ,, ...	423,462	3,99,314	61,02,205	9,99,600	31,739	14,30,653	740	291,020	4 14 8
1,934·49	,, ,, 23rd ,, ...	428,145	4,40,858	55,24,628	9,72,799	29,059	14,42,736	746	292,713	4 14 10
1,934·49	,, ,, 30th ,, ...	409,009	4,21,040	59,76,224	10,03,302	26,379	14,50,721	750	299,668	4 13 5
1,934·49	,, ,, 6th Feb. ...	436,192	4,33,902	66,63,167	10,84,782	29,529	15,48,213	800	303,477	5 1 1
1,934·49	,, ,, 13th ,, ...	426,570	4,15,179	63,55,000	10,06,101	33,457	14,51,737	750	296,963	4 14 3
1,934·49	,, ,, 20th ,, ...	450,286	4,44,971	65,97,325	10,34,190	31,553	15,30,714	791	304,105	5 0 6
1,934·49	,, ,, 27th ,, ...	461,527	4,49,783	66,32,951	10,35,990	29,956	15,14,823	783	305,035	4 15 5
1,934·49	,, ,, 5th Mar. ...	401,443	3,99,864	66,09,979	9,72,971	29,215	14,02,050	725	309,726	4 8 5
1,934·49	,, ,, 12th ,, ...	448,408	4,52,684	66,27,353	10,19,118	29,031	15,00,833	776	298,302	5 0 6
1,934·49	,, ,, 19th ,, ...	418,962	4,37,151	58,32,190	10,08,086	28,855	14,74,092	762	305,675	4 13 2
1,934·49	,, ,, 26th ,, ...	387,307	4,08,552	57,18,282	10,01,391	31,106	14,43,949	746	293,632	4 13 1
1,934·49	,, ,, 2nd April	368,853	3,91,328	65,10,466	10,15,931	28,245	14,35,464	742	308,684	4 10 5
1,934·49	,, ,, 9th ,, ...	384,448	3,84,197	64,20,788	10,40,630	30,561	14,55,448	752	303,968	4 11 10
1,934·49	,, ,, 16th ,, ...	397,904	3,96,456	67,03,330	11,01,635	35,848	15,03,959	777	310,105	4 13 7
1,934·49	,, ,, 23rd ,, ...	440,131	4,13,377	68,77,060	11,48,230	35,644	15,97,251	826	303,412	5 4 3
1,934·49	,, ,, 30th ,, ...	489,735	4,11,579	60,88,016	11,44,984	36,296	15,92,859	823	317,471	5 0 3
1,934·49	,, ,, 7th May ...	501,679	4,16,308	68,98,463	11,93,613	37,265	16,17,186	836	307,510	5 4 2
1,934·49	,, ,, 14th ,, ...	487,107	3,99,753	69,61,514	11,49,771	37,757	15,87,281	821	314,057	5 0 10
1,934·49	,, ,, 21st ,, ...	426,279	4,32,332	75,94,175	11,96,688	37,880	16,56,900	857	312,333	5 4 11
1,934·49	,, ,, 28th ,, ...	416,548	4,01,727	63,78,494	12,25,767	34,796	16,62,090	859	331,787	5 0 2
	Totals up to date ...	9,071,071	87,08,770	13,74,77,527	2,26,43,971	6,77,825	3,20,90,566	779	6,499,456	4 15 0

* Audited figures.

TARKESSUR BRANCH RAILWAY.

Approximate Return of Traffic for week ended 27th May 1905 on 22·28 miles open.

	Coaching Traffic.		Merchandise and Mineral Traffic.		Other earnings (estimated).	Total earnings.	Traffic Train-miles run.		
	No. of passengers.	Coaching receipts.	Weight carried.	Receipts.			Coaching.	Merchandise.	Total.
		Rs. A. P.	Mds. s.	Rs. A. P.	Rs. A. P.	Rs. A. P.			
Total traffic for the week ...	20,934	4,856 0 0	13,435 0	580 0 0	10 0 0	5,446 0 0	963	225	1,188
Or per mile of railway ...	.....	218 7 1	... ...	26 1 6	0 7 3	244 15 9	...	.....	.....
For previous 20 weeks of half-year	515,237*	1,30,261 0 0*	3,93,542 0†	15,038 0 0†	165 0 0‡	1,45,464 0 0	20,081§	4,573§	24,654§
Total for 21 weeks ...	536,171	1,35,117 0 0	4,06,977 0	15,618 0 0	175 0 0	1,50,910 0 0	21,044	4,798	25,790
COMPARISON.									
Total for corresponding week of previous year.	21,198	5,140 11 1	13,067 20	502 11 0	3 10 0	5,647 0 1	893	296	1,189
Per mile of railway corresponding week of previous year.	.....	231 4 0	.....	22 9 10	0 2 7	254 0 5	.....	.....	.....
Total for corresponding 21½ weeks of previous year.	564,307	1,44,393 10 10	4,85,764 20	17,293 2 0	170 4 9	1,61,857 1 7	22,451	6,629	29,080

* Added No. of passengers 2,318 and Rs. 308 } On account of difference between the approximate and audited figures for the week ended 15th
† Do. Mds. 1,848 and ,, 34 } April 1905.
‡ Do. ,, 3
§ Audited figures up to 15th April 1905.

1905. *Abstract of progressive weekly returns of all earnings for 1905 in comparison with 1904.*

Open mileage.	Period.	Coaching Traffic.		Merchandise and Mineral Traffic.		Other earnings.	Total.	Per mile of railway.	Train mileage.	
		No. of passengers.	Rs.	Mds.	Rs.	Rs.	Rs.	Rs.	No.	Rate. Rs. A. P.
*22·28	Week ended 7th Jan.	20,210	4,786	21,896	805	6	5,597	252	1,188	4 11 4
*22·28	,, ,, 14th ,, ...	21,862	4,931	18,783	602	4	5,537	249	1,188	4 10 7
*22·28	,, ,, 21st ,, ...	22,881	5,288	23,026	844	6	6,138	276	1,188	5 3 1
*22·28	,, ,, 28th ,, ...	21,754	4,994	19,716	726	7	5,727	258	1,166	4 14 7
*22·28	,, ,, 4th Feb. ...	20,042	4,689	15,613	552	11	5,251	236	1,188	4 6 9
*22·28	,, ,, 11th ,, ...	21,217	5,158	20,771	837	11	6,000	270	1,188	5 0 10
*22·28	,, ,, 18th ,, ...	19,637	4,820	18,240	633	6	5,459	246	1,189	4 9 6
*22·28	,, ,, 25th ,, ...	26,194	6,385	30,704	1,039	6	7,430	334	1,188	6 4 1
*22·28	,, ,, 4th Mar. ...	37,973	10,642	30,530	1,206	15	11,863	534	1,242	9 13 6
*22·28	,, ,, 11th ,, ...	30,179	7,718	19,399	779	7	8,504	383*	1,427	5 15 4
*22·28	,, ,, 16th ,, ...	20,841	6,029	20,130	888	7	6,924	312	1,186	5 13 8
*22·28	,, ,, 25th ,, ...	20,683	6,308	16,329	619	7	6,934	312	1,186	5 13 7
*22·28	,, ,, 1st April ...	24,302	5,901	20,503	770	8	6,679	300	1,230	5 6 10
*22·28	,, ,, 8th ,, ...	31,912	8,894	20,326	807	17	9,718	437	1,186	8 3 11
*22·28	,, ,, 15th ,, ...	32,543	15,934	14,487	600	12	16,536	744	1,028	10 8 6
22·28	,, ,, 22nd ,, ...	23,529	5,943	18,483	730	8	6,681	301	1 188	5 10 4
22·28	,, ,, 29th ,, ...	22,566	5,574	15,568	781	7	6,362	283	1,186	5 4 10
22·28	,, ,, 6th May ...	22,247	5,618	23,857	813	8	6,439	290	1,189	5 6 8
22·28	,, ,, 13th ,, ...	22,911	5,490	10,723	498	6	5,914	266	1,188	4 15 1
22·28	,, ,, 20th ,, ...	21,764	5,246	14,557	578	6	5,830	262	1,188	4 14 6
22·28	,, ,, 27th ,, ...	20,934	4,856	13,435	580	10	5,446	245	1,188	4 9 6
	Totals up to date ...	536,171	1,35,117	4,06,977	15,618	175	1,50,910	333	25,790	5 13 7

Abstract of progressive weekly returns of all earnings for 1905 in comparison with 1904—concluded. *1904.*

		No. of passengers.	Rs.	Mds.	Rs.	Rs.	Rs.	Rs.	No.	Rate. Rs. A. P.
22·28	First 9 days of Jan. ...	25,125	6,268	28,280	1,003	14	7,285	328	1,340	4 11 3
22·28	Week ended 16th ,, ...	19,705	4,483	17,986	662	9	5,074	229	1,188	4 4 4
22·28	,, ,, 23rd ,, ...	21,894	5,229	18,703	703	8	5,939	267	1,188	5 0 0
22·28	,, ,, 30th ,, ...	24,150	5,834	27,323	785	1	6,613	297	1,188	5 9 1
22·28	,, ,, 6th Feb. ...	28,926	7,082	25,796	794	3	7,879	354	1,188	6 10 1
22·28	,, ,, 13th ,, ...	26,680	6,151	20,378	659	6	6,816	306	1,234	5 8 6
22·28	,, ,, 20th ,, ...	39,816	10,661	28,309	733	4	11,397	513	1,496	7 9 13
22·28	,, ,, 27th ,, ...	25,592	6,146	24,759	896	10	7,052	317	1,188	5 13 5
22·28	,, ,, 6th Mar. ...	23,900	6,791	19,137	684	6	7,481	383	1,188	6 5 10
22·28	,, ,, 13th ,, ...	24,231	6,066	27,319	963	7	6,966	313	1,189	5 13 1
22·28	,, ,, 19th ,, ...	25,452	6,285	26,060	1,043	11	7,339	330	1,188	6 2 9
22·28	,, ,, 26th ,, ...	22,166	5,490	19,643	774	15	6,279	282	1,188	5 4 7
22·28	,, ,,* 2nd April ...	25,804	6,236	26,084	1,078	9	7,323	334	1,194	6 7 10
22·28	,, ,, 9th ,, ...	39,679	11,781	30,244	1,193	10	12,994	580	1,274	10 7 4
22·28	,, ,, 16th ,, ...	46,269	14,351	21,814	767	16	15,124	690	1,496	10 1 9
22·28	,, ,, 23rd ,, ...	24,167	6,023	26,097	836	12	6,871	309	1,148	5 13 5
22·28	,, ,, 30th ,, ...	26,740	6,785	25,499	903	4	7,752	349	1,188	6 8 5
22·28	,, ,, 7th May ...	25,960	6,406	25,092	855	16	7,315	349	1,188	6 2 9
22·28	,, ,, 14th ,, ...	23,177	6,091	34,296	930	5	7,026	316	1,188	5 14 3
22·28	,, ,, 21st ,, ...	20,955	5,126	16,623	641	1	5,768	259	1,188	4 12 1
22·28	,, ,, 28th ,, ...	21,198	5,141	13,068	503	3	5,647	256	1,188	4 13 1
	Totals up to date ...	564,307	1,44,394	4,85,764	17,293	170	1,61,857	342	35,900	6 3 9

* Audited figures.

DELHI-UMBALLA-KALKA RAILWAY.

Approximate Return of Traffic for week ended 27th May 1905 on 162·36 miles open.

	Coaching Traffic.		Merchandise and Mineral Traffic.		Other earnings (estimated).	Total earnings.	Traffic Train-miles run.		
	No. of passengers.	Coaching receipts.	Weight carried.	Receipts.			Coaching.	Merchandise.	Total.
		Rs. A. P.	Mds. S.	Rs. A. P.	Rs. A. P.	Rs. A. P.			
Total traffic for the week	23,846	19,367 0 0	1,06,155 0	16,241 0 0	80 0 0	35,688 0 0	8,725	4,011	12,736
Or per mile of railway ...	.....	119 4 6	.....	100 0 6	0 7 11	219 13 11	.....	.....	.....
For previous 20 weeks of half-year	485,127*	4,12,141 0 0*	39,18,800 0†	3,14,565 0 0†	1,746 0 0‡	7,28,452 0 0	183,019§	80,054§	263,073
Total for 21 weeks ...	508,973	4,31,508 0 0	41,14,955 0	3,30,806 0 0	1,826 0 0	7,64,140 0 0	191,744	84,065	275,809
COMPARISON.									
Total for corresponding week of previous year.	23,726	19,243 3 1	2,85,353 20	17,467 13 4	43 15 6	36,754 15 11	9,256	4,045	13,301
Per mile of railway corresponding week of previous year.	.....	118 8 4	.....	107 9 5	0 4 4	226 6 1	.....	.....	.....
Total for corresponding 21¾ weeks of previous year.	545,674	4,63,151 12 4	29,27,218 10	2,76,553 8 10	1,288 1 3	7,40,993 8 5	208,844	78,828	287,672

* Added No. of passengers 1,624 and Rs. 789 } On account of difference between the approximate and audited figures for the week ended 15th
† Do. Mds. 27,840 ,, ,, 5,306 } April 1905.
‡ Deducted ,, 33
§ Audited figures up to 15th April 1905.

1905. *Abstract of progressive weekly returns of all earnings for 1905 in comparison with 1904.*

Open mileage.	Period.	Coaching Traffic.		Merchandise and Mineral Traffic.		Other earnings.	Total.	Per mile of railway.	Train mileage.	
		No. of passengers.	Rs.	Mds.	Rs.	Rs.	Rs.	Rs.	No.	Rate. Rs. A. P.
*162·36	Week ended 7th Jan. ...	21,203	18,621	2,37,419	11,933	91	30,645	189	12,092	2 5 9
*162·36	,, ,, 14th ,, ...	21,276	18,885	1,18,935	13,506	107	32,498	200	13,092	2 7 9
*162·36	,, ,, 21st ,, ...	20,051	15,772	1,32,909	13,546	108	29,426	181	13,513	2 2 10
*162·36	,, ,, 28th ,, ...	22,039	17,068	1,66,407	17,714	115	34,897	215	13,262	2 10 1
*162·36	,, ,, 4th Feb. ...	21,422	18,936	1,07,182	11,213	79	27,278	168	12,731	2 2 3
*162·36	,, ,, 11th ,, ...	21,231	17,449	2,74,378	17,541	114	35,104	216	12,830	2 11 10
*162·36	,, ,, 18th ,, ...	22,588	16,262	1,37,412	16,671	119	33,052	204	13,241	2 7 11
*162·36	,, ,, 25th ,, ...	26,876	20,440	2,90,289	22,124	114	42,678	263	12,716	3 5 8
*162·36	,, ,, 4th Mar. ...	26,883	19,781	2,53,441	15,119	58	34,958	216	12,996	2 11 0
*162·36	,, ,, 11th ,, ...	27,230	24,468	1,97,631	15,120	61	39,639	244	13,117	3 0 4
*162·36	,, ,, 18th ,, ...	25,093	24,525	1,97,036	17,477	75	42,077	259	12,581	3 5 6
*162·36	,, ,, 25th ,, ...	24,492	22,435	2,65,014	16,651	85	39,171	241	13,720	2 13 8
*162·36	,, ,, 1st April ...	30,522	29,220	4,02,274	20,330	76	49,626	306	14,717	3 5 11
*162·36	,, ,, 8th ,, ...	30,386	27,984	1,53,204	16,254	111	44,349	273	14,187	3 2 3
*162·36	,, ,, 15th ,, ...	27,608	24,225	1,53,846	18,182	59	42,466	262	14,396	2 15 2
162·36	,, ,, 22nd ,, ...	24,860	21,734	1,17,862	13,752	86	35,562	219	12,255	2 14 6
162·36	,, ,, 29th ,, ...	22,049	19,719	1,79,031	12,609	75	32,403	200	12,239	2 10 4
162·36	,, ,, 6th May ...	22,698	19,319	1,36,376	13,674	67	33,060	204	12,886	2 9 0
162·36	,, ,, 13th ,, ...	22,696	18,603	1,67,331	13,853	73	32,529	200	12,918	2 8 3
162·36	,, ,, 20th ,, ...	23,474	19,865	2,02,469	17,296	73	37,034	228	12,766	2 14 5
162·36	,, ,, 27th ,, ...	23,846	19,367	1,06,155	16,241	80	35,688	220	12,736	2 12 10
	Totals up to date ...	508,973	4,31,508	41,14,955	3,30,806	1,826	7,64,140	224	275,809	2 12 4

Abstract of progressive weekly returns of all earnings for 1905 in comparison with 1904—concluded. *1904.*

		No. of passengers.	Rs.	Mds.	Rs.	Rs.	Rs.	Rs.	No.	Rate. Rs. A. P.
162·36	First 9 days of Jan. ...	24,246	22,472	1,06,228	12,553	53	35,078	216	16,546	2 1 11
162·36	Week ended 16th ,, ...	18,106	13,980	97,997	12,697	31	26,708	165	12,769	2 1 6
162·36	,, ,, 23rd ,, ...	18,210	14,767	1,03,833	11,427	44	26,238	162	12,924	2 0 6
162·36	,, ,, 30th ,, ...	20,112	18,126	2,06,450	13,841	29	34,006	210	13,068	2 9 9
162·36	,, ,, 6th Feb. ...	20,613	15,244	1,33,164	12,605	31	27,880	172	12,032	2 5 1
162·36	,, ,, 13th ,, ...	20,810	17,050	1,41,217	12,811	59	29,920	184	13,340	2 3 10
162·36	,, ,, 20th ,, ...	21,858	19,050	1,40,693	12,216	62	31,328	193	12,747	2 7 4
162·36	,, ,, 27th ,, ...	22,363	19,687	1,88,996	15,095	43	34,805	214	12,808	2 11 3
162·36	,, ,, 5th Mar. ...	22,770	20,352	1,28,894	10,994	81	31,357	193	13,180	2 6 1
162·36	,, ,, 12th ,, ...	20,882	23,169	96,548	10,402	54	33,625	207	14,430	2 5 3
162·36	,, ,, 19th ,, ...	76,587	45,411	87,969	11,913	132	57,455	354	17,390	3 4 10
162·36	,, ,, 26th ,, ...	35,077	27,584	1,38,650	15,247	101	42,882	264	15,142	2 13 4
162·36	,, ,, 2nd April ...	23,736	26,822	1,71,633	17,010	76	43,908	270	13,743	3 3 1
162·36	,, ,, 9th ,, ...	24,112	25,150	1,01,971	12,588	77	37,816	232	13,899	2 11 6
162·36	,, ,, 16th ,, ...	20,630	22,479	99,823	12,581	60	35,120	216	13,493	2 9 8
162·36	,, ,, 23rd ,, ...	23,174	21,732	1,17,958	13,828	58	35,638	220	13,418	2 10 6
162·36	,, ,, 30th ,, ...	25,303	21,849	1,24,625	13,355	72	35,276	217	13,719	2 9 2
162·36	,, ,, 7th May ...	23,326	21,266	1,88,413	11,100	57	32,423	200	12,954	2 7 11
162·36	,, ,, 14th ,, ...	25,619	21,937	1,10,319	11,606	52	33,755	202	12,553	2 9 9
162·36	,, ,, 21st ,, ...	25,414	26,601	1,53,084	13,288	72	39,961	240	14,110	2 13 4
162·36	,, ,, 28th ,, ...	23,726	19,243	2,85,353	17,468	44	36,755	226	13,301	2 12 3
	Totals up to date ...	545,674	4,63,151	29,27,218	2,76,554	1,288	7,40,993	214	287,672	2 9 3

* Audited figures.

SOUTH BEHAR RAILWAY.

Approximate Return of Traffic for week ended 27th May 1905 on 78·76 miles open.

	Coaching Traffic.		Merchandise and Mineral Traffic.		Other earnings (estimated).	Total earnings.	Traffic train-miles run.		
	Number of passengers.	Coaching receipts.	Weight carried.	Receipts.			Coaching.	Merchandise.	Total
		Rs. A. P.	Mds. s.	Rs. A. P.	Rs. A. P.	Rs. A. P.			
Total traffic for the week	14,666	6,184 0 0	53,319 0	4,316 0 0	29 0 0	10,529 0 0	1,928	1,378	3,306
Or per mile of railway	.....	78 8 5	.....	54 12 9	0 5 11	133 10 11	.....	.....	.....
For previous 20 weeks of half-year	283,383*	1,38,887 0 0*	12,22,308 0†	73,084 0 0†	805 0 0‡	2,13,776 0 0	36,324§	27,899§	64,223
Total for 21 weeks ...	298,049	1,45,071 0 0	12,75,627 0	77,400 0 0	834 0 0	2,23,305 0 0	38,243	29,267	67,510
COMPARISON.									
Total for corresponding week of previous year.	15,358	6,707 8 1	73,772 30	4,659 10 0	25 9 6	11,392 11 7	1,653	1,961	3,614
Per mile of railway corresponding week of previous year.	.....	85 2 7	.....	59 2 8	0 5 2	144 10 5	.....	.....	.....
Total for corresponding 21½ weeks of previous year.	294,403	1,43,360 10 8	30,59,075 0	1,03,434 2 0	737 0 9	2,48,531 13 0	34,928	25,336	60,264

* Deducted No. of passengers 1,055 and Rs. 650
† Added Mds. 6,830 and „ 1,148
‡ Deducted „ 10
§ Audited figures up to 15th April 1905.

} On account of difference between the approximate and audited figures for the week ended 15th April 1905.

1905. *Abstract of progressive weekly returns of all earnings for 1905 in comparison with 1904.*

Open mileage.	Period.	Coaching Traffic.		Merchandise and Mineral Traffic.		Other earnings.	Total.	Per mile of railway.	Train mileage.	
		No. of Passengers.	Rs.	Mds.	Rs.	Rs.	Rs.	Rs.	No.	Rate Rs. A. P.
*78·76	Week ended 7th Jan. ...	14,187	6,026	55,900	2,640	24	9,659	123	3,471	2 12 6
*78·76	„ „ 14th „ ...	12,404	5,046	63,910	3,823	33	9,902	124	3,508	2 13 1
*78·76	„ „ 21st „ ...	12,226	6,122	58,457	2,850	23	8,995	114	3,306	2 11 1
*78·76	„ „ 28th „ ...	12,209	6,080	56,307	2,835	25	8,940	114	3,227	2 12 1
*78·76	„ „ 4th Feb. ...	12,442	6,170	49,046	3,862	35	10,007	128	3,615	2 15 1
*78·76	„ „ 11th „ ...	12,799	6,498	61,884	3,007	33	9,538	121	3,765	2 8 6
*78·76	„ „ 18th „ ...	15,633	8,449	56,634	3,301	50	11,800	150	3,287	3 9 3
*78·76	„ „ 25th „ ...	16,030	8,427	58,824	3,539	50	12,016	153	3,099	3 14 0
*78·76	„ „ 4th March ...	17,078	8,424	61,078	3,350	40	11,832	150	2,204	5 5 0
*78·76	„ „ 11th „ ...	15,872	7,318	53,166	3,342	53	10,713	136	3,140	3 4 4
*78·76	„ „ 18th „ ...	13,667	7,451	44,127	3,186	41	10,608	135	2,887	3 10 3
*78·76	„ „ 25th „ ...	15,214	8,006	61,340	4,335	33	12,374	157	2,989	4 1 1
*78·76	„ „ 1st April ...	16,198	8,005	80,380	3,619	45	11,669	148	3,277	3 9 0
*78·76	„ „ 8th „ ...	15,268	7,485	1,27,510	5,344	54	13,903	164	3,537	3 19 4
*78·76	„ „ 15th „ ...	13,818	6,305	71,509	4,493	34	10,832	138	3,308	3 4 4
78·76	„ „ 22nd „ ...	13,292	5,702	63,661	3,757	40	9,508	121	3,070	3 1 1
78·76	„ „ 29th „ ...	12,791	6,224	78,067	4,836	47	11,107	141	2,953	3 12 3
78·76	„ „ 6th May ...	14,324	6,344	62,966	3,990	43	10,381	132	3,345	3 1 1
78·76	„ „ 13th „ ...	14,681	6,512	48,679	3,337	42	9,891	126	3,306	2 15 1
78·76	„ „ 20th „ ...	14,314	6,449	50,050	3,650	42	10,141	129	3,306	3 1
78·76	„ „ 27th „ ...	14,666	6,184	53,319	4,316	29	10,529	134	3,306	3 3 1
	Totals up to date ...	298,049	1,45,071	12,75,627	77,400	834	2,23,305	135	67,515	3 4 1

Abstract of progressive weekly returns of all earnings for 1905 in comparison with 1904—concluded. 1904

		No. of Passengers.	Rs.	Mds.	Rs.	Rs.	Rs.	Rs.	No.	Rate Rs. A. P.
78·76	First 9 days of Jan. ...	15,528	7,103	82,119	4,602	36	11,831	150	3,230	3 9 6
78·76	Week ended 16th „ ...	11,638	5,312	44,913	3,637	24	8,973	114	2,363	3 12 9
78·76	„ „ 23rd „ ...	13,408	6,259	94,687	4,283	17	11,159	142	2,540	4 4 1
78·76	„ „ 30th „ ...	12,814	6,240	56,738	4,101	38	10,378	132	2,736	3 12 3
78·76	„ „ 6th Feb. ...	12,562	6,536	59,201	4,149	25	10,710	136	2,911	3 10 6
78·76	„ „ 13th „ ...	13,863	6,916	60,522	4,119	24	11,058	140	2,756	4 0 5
78·76	„ „ 20th „ ...	14,432	7,577	1,15,061	3,631	27	11,735	149	2,983	3 14 9
78·76	„ „ 27th „ ...	13,874	7,536	88,460	4,173	44	11,753	149	2,976	3 15 10
78·76	„ „ 5th March ...	13,104	7,338	90,683	4,081	70	11,489	144	2,984	3 14 11
78·76	„ „ 13th „ ...	13,993	7,561	1,57,237	7,128	50	14,717	187	3,230	4 8 11
78·76	„ „ 19th „ ...	14,064	7,080	94,571	5,181	42	12,273	156	3,197	3 14 3
78·76	„ „ 26th „ ...	12,442	6,313	1,08,182	5,776	27	12,116	154	2,835	4 4 5
78·76	„ „ 2nd April ...	11,482	5,553	73,774	5,161	31	10,745	136	2,838	3 13 5
78·76	„ „ 9th „ ...	12,563	5,812	85,809	6,983	53	12,780	162	2,835	4 6 5
78·76	„ „ 16th „ ...	14,698	6,173	87,502	6,090	47	12,310	156	2,914	4 4 1
78·76	„ „ 23rd „ ...	14,472	6,312	69,931	4,284	33	10,629	135	2,677	3 15 6
78·76	„ „ 30th „ ...	15,012	6,734	86,274	5,699	39	12,472	158	3,160	3 15 4
78·76	„ „ 7th May ...	13,469	9,277	63,300	4,541	60	13,918	177	2,760	5 0 9
78·76	„ „ 14th „ ...	15,556	6,880	54,647	4,516	33	11,429	145	2,677	4 4 0
78·76	„ „ 21st „ ...	13,896	6,379	3,06,553	8,379	32	14,780	188	2,914	5 1 1
78·76	„ „ 28th „ ...	15,358	6,708	73,775	4,660	25	11,393	145	2,914	3 15 7
	Totals up to date	294,403	1,43,361	19,59,676	1,05,434	737	2,48,532	148	60,254	4 2 6

* Audited figures.

EASTERN BENGAL STATE RAILWAY SYSTEM.

(INCLUDING B.-S. B., R. M. B. AND R.-K. L. RAILWAYS.)

Approximate Return of Traffic and Mileage for the week ended 27th May 1905 on 1,061 miles open.

	Coaching Traffic.		Merchandise and Mineral Traffic.		Other earnings (including steam-boat).	Total earnings.	Traffic Train-miles run.		
	No. of passengers.	Coaching receipts.	Weight carried.	Receipts.			Coaching.	Merchandise.	Total.
		Rs. A. P.	Mds. S.	Rs. A. P.	Rs. A. P.	Rs. A. P.			
Total traffic for the week ...	269,970	1,31,670 0 0	14,65,800 0	1,34,860 0 0	50,119 0 0	3,16,580 0 0	44,382	29,826	76,208
Or per mile of railway	254	124 0 0	1,382 0	127 0 0	30 0 0*	290 0 0*	...	...	...
For previous 20 weeks of half-year†	5,687,725	27,48,062 0 0	3,24,60,616 0	27,37,409 0 0	3,61,663 0 0	58,47,154 0 0	910,862	681,072	1,591,934
Total for 21 weeks ...	5,957,695	28,79,732 0 0	3,39,26,416 0	28,72,269 0 0	4,11,783 0 0	61,63,734 0 0	957,244	710,898	1,668,142
COMPARISON.									
Total for corresponding week of previous year	256,733	1,29,637 0 0	13,30,058 0	1,63,671 0 0	69,253 0 0	3,63,261 0 0	44,663	35,002	79,665
Per mile of railway corresponding week of previous year (957 miles)	268	135 0 0	1,912 0	171 0 0	62 0 0	369 0 0	...	...	...
Total to corresponding date of previous year	5,725,072	28,46,210 0 0	3,72,85,950 0	34,49,764 0 0	4,93,636 0 0	67,89,610 0 0	876,857	855,656	1,732,513

* Excluding ferry earnings, Rs. 9,380.
† Audited up to week ending 8th April 1905.
Decrease in goods earnings is due to larger receipts on account of ballast trains and revenue stores, and that under sundries to larger credits under hire of rolling-stock in the corresponding week of last year.

DACCA STATE RAILWAY.

Approximate Return of Traffic and Mileage for the week ended 27th May 1905 on 86 miles open.

	Coaching Traffic.		Merchandise and Mineral Traffic.		Other earnings.	Total earnings.	Traffic Train-miles run.		
	No. of passengers.	Coaching receipts.	Weight carried.	Receipts.			Coaching.	Merchandise.	Total.
		Rs. A. P.	Mds. S.	Rs. A. P.	Rs. A. P.	Rs. A. P.			
Total traffic for the week ...	27,260	7,670 0 0	44,740 0	2,630 0 0	480 0 0	10,780 0 0	3,397	1,043	4,440
Or per mile of railway	317	89 0 0	520 0	30 0 0	6 0 0	125 0 0	...	...	...
For previous 20½ weeks of half-year*	584,240	1,72,468 0 0	6,40,239 0	51,124 0 0	4,290 0 0	2,27,882 0 0	60,966	24,396	85,362
Total for 21 weeks ...	611,500	1,80,138 0 0	6,84,979 0	53,754 0 0	4,770 0 0	2,38,662 0 0	64,363	25,439	89,802
COMPARISON.									
Total for corresponding week of previous year	26,259	7,413 0 0	1,34,282 0	3,793 0 0	556 0 0	11,761 0 0	3,265	1,043	4,308
Per mile of railway corresponding week of previous year ...	305	86 0 0	1,561 0	44 0 0	7 0 0	137 0 0	...	...	...
Total to corresponding date of previous year	637,810	1,86,403 0 0	10,35,433 0	68,174 0 0	5,301 0 0	2,60,088 0 0	62,133	37,092	99,225

* Audited up to week ending 8th April 1905.

COOCH BEHAR STATE RAILWAY.

Approximate Return of Traffic and Mileage for the week ended 27th May 1905 on 33·6 miles open.

	Coaching Traffic.		Merchandise and Mineral Traffic.		Other earnings (including ferry).	Total earnings.	Traffic Train-miles run.		
	No. of passengers.	Coaching receipts.	Weight carried.	Receipts.			Coaching.	Merchandise.	Total.
		Rs. A. P.	Mds. S.	Rs. A. P.	Rs. A. P.	Rs. A. P.			
Total traffic for the week ...	3,480	1,250 0 0	1,48,740 0	3,170 0 0	10 0 0	4,430 0 0	430	(a)532	962
Or per mile of railway ...	104	38 0 0	4,426 0	95 0 0	.....	133 0 0	...	...	...
For previous 20 weeks of half-year*	64,908	27,509 0 0	9,24,738 0	31,121 0 0	253 0 0	58,883 0 0	9,135	32,211	41,346
Total for 21 weeks* ...	68,388	28,759 0 0	10,73,478 0	34,291 0 0	263 0 0	63,313 0 0	9,565	32,743	42,308
COMPARISON.									
Total for corresponding week of previous year	3,463	1,229 0 0	13,985 0	201 0 0	5 0 0	2,143 0 0	594	1,949	2,486
Per mile of railway corresponding week of previous year ...	103	37 0 0	415 0	27 0 0	.....	64 0 0	...	...	...
Total to corresponding date of previous year	67,963	26,239 0 0	13,10,368 0	38,912 0 0	288 0 0	65,469 0 0	9,753	35,119	44,872

(a) Ballast train-miles 100.
* Audited up to week ending 8th April 1905.
Inclusion of stone traffic earnings accounts for the increase under "goods."

MYMENSINGH-JAGANNATHGANJ RAILWAY.

Approximate Return of Traffic and Mileage for the week ended 27th May 1905 on 51·37 miles open.

	Coaching Traffic.		Merchandise and Mineral Traffic.		Other earnings (including ferry).	Total earnings.	Traffic Train-miles run.		
	No. of passengers.	Coaching receipts.	Weight carried.	Receipts.			Coaching.	Merchandise.	Total.
		Rs. A. P.	Mds. s.	Rs. A. P.	Rs. A. P.	Rs. A. P.			
Total traffic for the week ...	7,500	2,500 0 0	17,760 0	560 0 0	10 0 0	2,870 0 0	1,143	235	1,378
Or per mile of railway ..	148	48 0 0	346 0	11 0 0	...	56 0 0	...	...	...
For previous 20 weeks of half-year*	172,031	51,131 0 0	2,94,267 0	14,880 0 0	276 0 0	66,280 0 0	21,636	7,014	28,650
Total for 21 weeks ..	180,221	53,413 0 0	3,12,027 0	15,449 0 0	288 0 0	69,150 0 0	22,767	7,299	30,066
Comparison.									
Total for corresponding week of previous year	7,842	2,358 0 0	23,844 0	681 0 0	1 0 0	2,940 0 0	1,219	209	1,428
Per mile of railway corresponding week of previous year ...	149	45 0 0	460 0	13 0 0	...	56 0 0	...	...	...
Total to corresponding date of previous year	222,654	63,391 0 0	4,11,583 0	21,494 0 0	493 0 0	85,378 0 0	23,173	11,309	34,482

* Audited up to week ending 8th April 1905.

BENGAL CENTRAL RAILWAY COMPANY, LIMITED.

Approximate Return of Traffic and Mileage for the week ended 27th May 1905 on 139 miles open.

	Coaching Traffic.		Merchandise and Mineral Traffic.		Other earnings.	Total earnings.	Traffic Train-miles run.		
	Number of passengers.	Coaching receipts.	Weight carried.	Receipts.			Coaching.	Merchandise.	Total.
		Rs. A. P.	Mds. s.	Rs. A. P.	Rs. A. P.	Rs. A. P.			
Total traffic for the week ...	35,856	14,608 0 0	61,721 0	5,867 8 0	18,016 0 0	38,491 0 0	4,074	3,306	7,380
Or per mile of railway ..	276	112 0 0†	434 0	39 0 0	112 0 0	263 0 0	.....	..	...
For previous 21 weeks of half-year*	609,008	3,16,704 0 0	14,09,190 0	1,16,024 0 0	61,710 0 0	4,07,438 0 0	93,189	56,383	149,572
Total for 22 weeks	645,464	3,31 312 0 0	15,10,971 0	1,21,391 0 0	80,336 0 0	5,31,039 0 0	97,233	59,639	156,872
Comparison.									
Total for corresponding week of previous year	31,904	13,337 0 0	60,623 0	4,568 0 0	14,487 0 0	32,332 0 0	5,118	2,086	7,204
Per mile of railway corresponding week of previous year ..	245	103 0 0†	561 0	35 0 0	104 0 0	240 0 0	.....	.....	...
Total to corresponding date of previous year	841,758	3,51,019 0 0	19,86,823 0	1,41,591 0 0	68,503 0 0	5,98,113 0 0	103,055	53,977	157,032

* Audited up to week ended 8th April 1905.
† Coaching traffic calculated on 130 miles only.

BENGAL AND NORTH-WESTERN RAILWAY.

Approximate Return of Traffic for the week ending 3rd June 1905 on 1,467 miles open.

	Coaching Traffic.		Merchandise and Mineral Traffic		Other earnings (estimated), including steam-boat.	Total earnings.	Traffic Train-miles run.		
	No. of passengers.	Receipts.	Weight carried.	Receipts.			Coaching.	Merchandise.	Total.
		Rs	Mds.	Rs.	Rs.	Rs			
Total traffic for the week on 1,467 miles open	331,080	(a) 1,35,660	10,58,860	(b) 1,39,110	(c) 22,050	2,96,850	42,790	(d) 42,818	85,608
Or per mile of railway	225 66	92·45	721 79	95·01	15·05	195·54	.....	.....	.....
For previous 21 weeks of half-years (e)	5,276,694	21,03,505	2 22,35,671	23,23,009	4,42,457	54,87,961	893,760	906,060	1,799,820
Total for 22 weeks ...	5,607,744	23,39,225	2,33,94,531	24,51,119	4,64,457	57,84,831	935,550	948,768	1,884,318
Comparison.									
Total for corresponding week of previous year on 1,388 miles open, ...	268,168	1,18,476	12,17,263	1,70,049	26,389	3,14,914	42,386	(f) 44,027	86,413
Per mile of railway corresponding week of previous year	193·26	85·36	877·00	122 51	19·01	226·88	.....	... .	.....
Total to corresponding date of previous year	5,473,549	24,34,618	2,26,06,225	31,62,284	5,31,783	61,28,785	899,904	901,786	1,801,690

(a) Increase mainly under local and foreign outward, principally due to continuance of Bahraich *mela* and marriage parties.
(b) Foreign outward bookings still very slack; foreign inward show a marked improvement.
(c) Decrease chiefly under steam-boats, due to reduced foreign outward traffic referred to above.
(d) Includes 6,336 miles of ballast trains.
(e) Includes audited figures up to week ending 23nd April 1905.
(f) Includes 5,100 miles of ballast trains.

ASSAM-BENGAL RAILWAY.

Approximate Return of traffic for the week ended 27th May 1905 on 737 miles open for all descriptions of traffic, and an additional 3 miles for goods traffic only.

	Coaching Traffic.		Merchandise and Mineral Traffic.		Other earnings (estimated), including steam-boat.	Total earnings.	Traffic Train-miles run.		
	No. of passengers.	Coaching receipts.	Weight carried.	Receipts.			Coaching.	Merchandise.	Total.
		Rs. A. P.	Mds. s.	Rs. A. P.	Rs. A. P.	Rs. A. P.			
Total traffic for the week ...	45,314	26,584 0 0	2,26,906 0	25,906 0 0	2,147 0 0	54,637 0 0	10,674	15,746	26,420
Per mile of railway	61·48	36·07	308·63	35·01	2·90	73·98	14·48	21·28	35·76
For previous 20 weeks of half-year	962,441	6,39,059 0 0	33,29,882 0	4,92,455 0 0	53,103 0 0	11,84,676 0 0	211,063	297,916	509,879
Total for 21 weeks ...	1,007,755	6,65,643 0 0	35,56,788 0	5,18,361 0 0	55,309 0 0	12,39,313 0 0	222,637	313,662	536,299
Comparison.									
Total for corresponding week of previous year	40,182	23,169 0 0	1,18,029 0	20,747 0 0	4,721 0 0	48,637 0 0	7,115	8,430	15,545
Per mile of railway corresponding week of previous year ...	54·52	31·44	159·50	28·04	6·38	65·86	9·65	11·39	21·04
Total to corresponding date of previous year	927,566	5,91,002 0 0	28,93,926 0	4,19,852 0 0	60,339 0 0	10,71,193 0 0	182,420	219,284	401,704

FINANCIAL YEAR.

Approximate Statement of Gross Receipts of the Assam-Bengal Railway.

Receipts for week ending 27th May 1905.			Receipts for week ending 28th May 1904.			Total receipts from 1st April 1905 to 27th May 1905.			Total receipts from 1st April 1904 to 28th May 1904.			Total increase in 1905.	Total decrease in 1905.
Mean mileage worked.	Receipts.	Per mile worked.	Mean mileage worked.	Receipts.	Per mile worked.	Mean mileage worked.	Total receipts.	Per mile worked per week.	Mean mileage worked.	Total receipts.	Per mile worked per week.		
	Rs.	Rs.		Rs.	Rs.		Rs.			Rs.		Rs.	
740	54,637	73·98	740	48,637	65·86	740	4,58,606	...	740	3,40,285	...	1,18,321	...

DARJEELING-HIMALAYAN RAILWAY COMPANY, LIMITED.

			Rs.	A.	P.	Rs.	A.	P.
Approximate earnings for the week ending 3rd June 1905	...	Coaching ...	8,789	0	0			
		Goods ...	15,098	0	0	23,965	0	0
		Other earnings ...	78	0	0			
Audited earnings for the corresponding period of 1904	...	Coaching ...	8,287	0	0			
		Goods ...	11,550	0	0	19,953	0	0
		Other earnings ...	106	0	0			
		Increase ...				4,012	0	0
Receipts per mile for the week ending 3rd June 1905	...	...			...	469	14	5
Ditto for the corresponding period of 1904	...	...			...	391	3	9
		Increase ...				78	10	8
Receipts from 1st January to 3rd June 1905	...	...			...	3,86,715	0	0
Ditto for the corresponding period of 1904		...			...	4,30,383	0	0
		Decrease ...				43,668	0	0

Printed at the Printing Office, and published by the Book Depôt, of the Bengal Secretariat, Writers' Buildings, in the City of Calcutta, on 14th June 1905.

REGISTERED No. C209.]

No. 25 of 1905.

The Calcutta Gazette.

WEDNESDAY, JUNE 21, 1905.

CONTENTS.

	Page
PART I.—Orders and Notifications by the Lieutenant-Governor of Bengal, the High Court, Government Treasury, etc.	1111—1145
PART IA.—Orders and Notifications by the Government of India	109—112
PART IB.—Orders by the Lieutenant-Governor of Bengal	93—101
PART II.—Advertisements	763—797
PART III.—Acts of the Bengal Council	*Nil*
PART IV.—Bills of the Bengal Council	*Nil*
PART IVA.—Proceedings of the Bengal Legislative Council	*Nil*
PART V.—Acts of the Governor-General's Council assented to by the Governor-General	*Nil*
PART VI.—Bills introduced into the Council of the Governor-General for making Laws and Regulations or published under Rule 23	*Nil*
APPENDIX.—Marine Notifications	197—206
SUPPLEMENT No. 25:—	
Resolution on the Report of the Sanitary Commissioner, Bengal, for the years 1904	897
Statistical Return of Crops, Prices-current, Meteorological, Rainfall, Circular and Eastern Canals, Results of Meteorological Observations, Railway Traffic Receipts, &c., &c.	903—938

PART I.

Orders and Notifications by the Lieutenant-Governor of Bengal, the High Court, Government Treasury, &c.

ORDERS BY THE LIEUT.-GOVERNOR OF BENGAL.

No. 2929A.

APPOINTMENTS AND TRANSFERS.

GENERAL.—*No. 1586A.D.—The 14th June 1905.*—Babu Nobin Chandra Das, Deputy Magistrate and Deputy Collector, Dinajpur, is appointed temporarily to have charge of the Thakurgaon subdivision of that district.

Dinajpur.

No. 1639A.D.—The 17th June 1905.—Mr. H. E. Ransom, District and Sessions Judge, Chittagong, on leave, is appointed to act as District and Sessions Judge of Backergunge, during the absence, on leave, of Mr. J. H. Temple, or until further orders.

Chittagong.
Backergunge.

No. 1641A.D.—The 17th June 1905.—Mr. J. A. Ezechiel is appointed to act as District and Sessions Judge of Rangpur, during the absence, on deputation, of Mr. T. W. Richardson, or until further orders, on being relieved of his present appointment as Officiating District and Sessions Judge of Backergunge.

Backergunge.
Rangpur.

No. 1643A.D.—The 17th June 1905.—Mr. J. Johnston, Assistant Magistrate and Collector, is posted to the head-quarters station of the Mymensingh district, and is appointed to act, until further orders, in the first grade of Joint-Magistrates and Deputy Collectors, on being relieved of his present appointment as Officiating District and Sessions Judge of Rangpur.

Rangpur.
Mymensingh.

No. 1647A.D.—The 17th June 1905.—Mr. J. H. Price is appointed substantively *pro tempore* to be a Deputy Magistrate and Deputy Collector of the eighth grade and is posted to the head-quarters station of the 24-Parganas district.

24-Parganas.

No. 1705A.D.—The 19th June 1905.—Babu Surja Kumar Das, Deputy Magistrate and Deputy Collector, Faridpur, is transferred temporarily to the Araria subdivision of the Purnea district.

Faridpur.
Purnea.

No. 1713A.D.—The 19th June 1905.—Mr. J. D. Sifton, Officiating Joint-Magistrate and Deputy Collector, is posted temporarily to the head-quarters station of the Backergunge district, on being relieved of his Settlement duties in that district.

Backergunge.

No. 1738A.D.—The 19th June 1905.—The order of the 9th June 1905, appointing Mr. G. Milne, Assistant Magistrate and Collector, to have charge of the Sadar subdivision of the Howrah district on being relieved of his present appointment as Officiating Magistrate and Collector of Shahabad, is cancelled.

Shahabad.
Howrah.

ECCLESIASTICAL.—*No. 1579A.D.—The 14th June 1905.*—The order of the 25th April 1905, placing the services of the Revd. Canon Alfred Saunders Dyer, a Chaplain on the Calcutta (Bengal) Ecclesiastical Establishment, at the disposal of the Government of India in the Home Department, with effect from the 27th April 1905, is cancelled.

No. 1632A.D.—The 16th June 1905.—Mr. John Ala Din Khan, an Elder and Missionary of "The Church of God Association of India," Calcutta, is authorised, under section 9 of Act XV of 1872, to grant certificates of marriage between persons who are Native Christians.

Calcutta.

Mr. John Ala Din Khan is also appointed under Act VI of 1886 to be a Registrar of Births and Deaths in Calcutta.

PROMOTIONS.

GENERAL.—*No. 1667A.D.—The 17th June 1905.*—The following confirmations and promotions are sanctioned in the Executive Branch of the Provincial Civil Service :—

Confirmed in the third grade.

Babu Khetter Mohan Mitter.

Confirmed in the fourth grade.

Babu Sasibhusan Basu.
Mr. Dejen Lala Roy.
Babu Amrita Lal Mukherji.

Confirmed in the fifth grade.

Maulvi Syed Abdool Malek.
„ Mohiuddin Ahmed.
Babu Hira Lal Sen.
„ Kali Coomar Roy Chaudhry.
Maulvi Ashfaq Husain.

Promoted substantively pro tempore *to the fifth grade.*

Babu Jyotish Chunder Sen.
„ Jogneshwar Biswas.

Confirmed in the sixth grade.

Mr. A. J. Ollenbach.
Babu Suresh Chunder Sarkar.
„ Abhoy Prosad Das.
„ Hara Krishna Mahanti.
„ Anath Bandhu De.
„ Surendra Nath Chakravarti.

Promoted substantively pro tempore *to the sixth grade.*

Mr. H. A. Lane.
„ Sorab S. Day.

Confirmed in the seventh grade.

Mr. E. A. Oakley.
Maulvi Shamsuddin Haidar.
Babu Krishna Lal Dey.
„ Bhupendra Nath Mookerjee.
„ Chuni Lal Roy.
„ Durga Prosad.

Promoted substantively pro tempore *to the seventh grade.*

Babu Jyotis Chandra Acharyya.

LEAVE.

GENERAL.—*No. 1570A.D.—The 13th June 1905.*—Mr. J. F. Graham, Officiating District and Sessions Judge, Shahabad, is allowed combined leave for one year and four months, viz., privilege leave for two months under article 260 of the Civil Service Regulations, with effect from the 1st July 1905, or any subsequent date on which he may be relieved, and furlough for the remaining period under article 308 (*b*) of the Regulations.

Shahabad.

No. 1582A.D.—The 14th June 1905.—Babu Surendra Nath Ghose, Deputy Magistrate and Deputy Collector, is allowed furlough up to the 30th June 1905, under article 338 of the Civil Service Regulations, in extension of the leave granted to him under the order of the 5th December 1904.

No. 1584A D.—The 14th June 1905.—Babu Satyendra Nath Das, Deputy Magistrate and Deputy Collector, Thakurgaon, Dinajpur, is allowed leave for three months, under article 260 of the Civil Service Regulations, with effect from the 15th June 1905, or any subsequent date on which he may avail himself of it.

Dinajpur.

No. 1606A.D.—The 15th June 1905.—Babu Ashutosh Mookerjee, Deputy Magistrate and Deputy Collector, Cuttack, is allowed leave for fifteen days, under article 260 of the Civil Service Regulations, in extension of the leave granted to him under the order of the 4th April 1905.

Cuttack.

No. 1665A.D.—The 17th June 1905.—In modification of the order of the 2nd June 1905, Mr. J. J. Patel, Officiating District and Sessions Judge, Rangpur, is allowed combined leave for six months, viz, privilege leave for seventeen days under article 260 of the Civil Service Regulations, with effect from the 20th April 1905, and special leave for the remaining period under article 316 of the Regulations.

Rangpur.

No. 1716A D.—The 19th June 1905.—Mr. C. G. H. Allen, I.C.S., has been granted by His Majesty's Secretary of State for India an extension of furlough up to the 8th July 1905.

No. 1717A.D.—The 19th June 1905.—Mr. C. Fisher, I.C.S., has been granted by His Majesty's Secretary of State for India an extension of leave for six months, viz., furlough on medical certificate for two months and sixteen days and extraordinary leave for three months and fourteen days.

No. 1736A.D.—The 19th June 1905.—Babu Siva Prasanna Sen, Deputy Magistrate and Deputy Collector, is allowed furlough for six months, under article 338 of the Civil Service Regulations, in combination of the privilege leave for three months granted to him under the order of the 4th April 1905.

No. 1740A.D.—The 19th June 1905.—The order of the 9th June 1905, granting three months' privilege leave to Mr. W. D. R. Prentice, Officiating Joint-Magistrate and Deputy Collector, Howrah, is cancelled.

Howrah.

EDUCATION.—*No. 1636A.D.—The 17th June 1905.*—Babu Phani Bhusan Basu, Assistant Inspector of Schools, Presidency Division, on special duty, was on leave, under article 260 of the Civil Service Regulations, from the 16th April to the 9th June 1905, both days inclusive.

Presidency Divn.

The following orders are republished from the *Assam Gazette* :—

No. 4866G.—The 14th June 1905 —With effect from the 23rd May 1905, the date on which Mr. A. R. Edwards, I.C.S., Officiating Assistant Commissioner, first grade, proceeded on privilege leave—

Mr. A. J. Lainé, I.C.S., Officiating Assistant Commissioner, second grade, to officiate as Assistant Commissioner, first grade.

No. 4915G.—The 15th June 1905.—Privilege leave of absence for three months, under article 260 of the Civil Service Regulations, is granted to Mr. N. Williamson, District Superintendent of Police, in charge of the Mokokchang subdivision, with effect from the date on which he may avail himself of it.

No. 2633J.—The 9th June 1905.—Babu Aditya Chandra Chakravarty, late Officiating Subordinate Judge, Jessore, is appointed temporarily to be a Subordinate Judge of Sylhet, during the absence, on leave, of Babu Mati Lal Sinha, or until further orders.

No. 2634J.—The 9th June 1905.—Under the provisions of section 25 of Act XII of 1887 (The Civil Courts Act), the Chief Commissioner of Assam confers upon Babu Aditya Chandra Chakravarty, Sub-Judge of Sylhet, the jurisdiction of a Judge of a Court of Small Causes for the trial of suits cognizable by such a Court up to the value of Rs. 500, within the local limits of the Sadar Munsifi of Sylhet.

R. W. CARLYLE,
Offg. Chief Secy. to the Govt. of Bengal.

NOTIFICATION.

No. 1733A.D.—The 19th June 1905.—The Report of the Central Examination Committee having been received, the result of the first Half-yearly Departmental Examination of Assistant Magistrates and others, held on the 25th April 1905 and the two following days, is published for general information—

I.—SECOND OR HIGHER STANDARD.

(i) The officers, named below, have passed completely:—

1. Mr. J. F. W. James.
2. Babu Birendra Kumar Bose.

(ii) The officers, named below, who passed partially at previous examinations, have now passed in the remaining subject or subjects mentioned opposite their names:—

Civil Officers.

1.	Babu Jotindra Kumar Roy	...	Accounts.
2.	„ Annada Charan Das	...	Ditto.
3.	Mr. S. N. Mackenzie	...	Accounts and Bengali.
4.	„ Sarat Kumar Ghose	...	Accounts.
5.	Babu Hari Das Chatterjea	...	Ditto.
6.	„ Braja Nath Rai	...	Accounts and Hindustani.
7.	„ Debendra Nath Bose	...	Hindustani.
8.	„ Susibhusan Basu	...	Uriya.
9.	Mr. W. S. Hopkyns	...	Law and Accounts.
10.	„ C. T. Williams	...	Hindustani.
11.	Babu Narendra Kumar Sen	...	Accounts.
12.	Maulvi Sadad Abul Musood	...	Bengali.
13.	Mr. William Raha	...	Accounts.

Police Officer.

14.	Mr. J. F. Dickinson	...	Bengali.

(iii) The officers, named below, have passed partially and are still liable to examination in the remaining subject or subjects mentioned opposite their names in column 4 :—

Serial No.	Name.	Now passed in—	Still liable to examination in—
1	2	3	4
1	Mr. H. L. Fell ...	Accounts	Law, and Bengali at option.
2	„ C. L. Philip ...	Hindustani and Accounts	Law, and Bengali.
3	Babu Shamshair Jang Bahadur.	Accounts ...	Bengali at option.
4	Babu Roy Brajanandan Prosad Sinha.	Law	Accounts, and Bengali at option.
5	Mr. Naw Ratten Misra	Law and Accounts ...	Bengali.
6	Babu Promode Chandra Sen Gupta.	Accounts	Law by both standards, and Hindustani by the Higher Standard.
7	Babu Lakshmi Misra ...	Law	Accounts, and Bengali at option.
8	„ Bhabadev Sarkar ...	Do	Hindustani at option.
9	„ Rash Behary Mukherjee.	Accounts	Law by both standards, and Hindustani at option.
10	„ Rebati Nath Chatterjee.	Law and Accounts ...	Hindustani at option.
11	Maulvi Syed Dilawar Ali	Law	Ditto.
12	Mr. Mahim Chandra Ghosh	Hindustani	Law by the Higher Standard and Accounts by both standards.
13	„ W. A. Cosgrave ...	Law	Bengali, Hindustani and Accounts.
14	„ D. C. Patterson ...	Bengali and Hindustani...	Law and Accounts.
15	Babu Narendranath Datta.	Hindustani	Ditto.
16	Mr. W L. Scott ...	Law	Bengali, Hindustani and Accounts.
17	„ J. A. Woodhead ...	Accounts	Law, Bengali and Hindustani.

Serial No.	Name.	Now passed in—	Still liable to examination in—
1	2	3	4
	Civil Officers—concld.		
18	Babu Khirod Lal Mookerji	Law and Accounts ...	Hindustani at option.
19	Mr. S. McLeod Smith ...	Uriya	Law by both standards, Accounts by the Higher standard, and Hindustani at option.
20	„ J. A. Milligan ...	Law and Hindustani ...	Bengali.
21	Babu Baidya Nath Misra	Law	Hindustani at option.
22	Mr. H. D. Christian ...	Hindustani	Law and Accounts by both standards, and Bengali at option.
23	„ J. A. Dawson ...	Hindustani and Accounts	Law and Bengali.
24	„ H T. Cullis ...	Ditto ditto	Ditto.
25	„ H. E. Spry ...	Law	Bengali, Hindustani and Accounts.
26	Babu Atul Gopal Ray ...	Law and Accounts ...	Hindustani.
27	„ Ajodhya Prasada .	Ditto ditto	Bengali at option.
28	Mr. B A. Collins ...	Law, Hindustani and Accounts.	Bengali.
29	Pandit Hridaya Narayan	Accounts	Law by both standards, and Bengali at option.
30	Mr. A. W. Barnicott ...	Hindustani and Accounts	Law and Bengali.
31	Babu Girindro Narain Singh.	Accounts	Law by both standards, and Hindustani at option.
32	„ Hari Charan Bose ...	Law and Accounts ...	Hindustani at option.
33	Mr. H. Van Grieken ...	Accounts	Law, Bengali by both standards, and Hindustani at option.
34	Babu Sures Chandra Bose	Law and Accounts ...	Hindustani at option.
35	„ Lalit Chandra Guha	Ditto ...	Ditto.
36	„ Nogendro Nath Sen	Ditto ...	Ditto.
	Police Officer.		
37	Mr. N. B. Haynes ...	Law	Bengali and Hindustani.

II.—FIRST OR LOWER STANDARD.

(i) The officers, named below, have passed completely :—

1. Mr. C. L. Philip.
2. Maulvi Syed Muhammad Abdullah.
3. Mr. W. H. Nelson.
4. Babu Basanta Kumar Roy.
5. Mr. A. E. Scroope.
6. Babu Bagala Prasanna Chakraborty.
7. Mr. P. S. Shettle.
8. „ J. A. Woodhead.
9. Babu Nripendra Nath Ray.
10. Mr. J. A. Dawson.
11. „ H. T. Cullis.
12. „ H. E. Spry.
13. „ B. A. Collins.
14. Babu Chandra Nath De.

(ii) The officers, named below, who passed partially at previous examinations, have now passed in the remaining subject or subjects mentioned opposite their names :—

Civil Officers.

1.	Roy Brajanandan Prosad Sinha	...	...	Accounts.
2.	Babu Karali Charan Ganguli ...	...	...	Ditto
3.	Mr. F. Hollow	...	...	Law.
4.	Babu Jogendra Nath Banerji	...	...	Do.
5.	Mr. Sarat Kumar Ghose ...	...	...	Accounts.
6.	„ W. A. Cosgrave ...	...	...	Ditto.

Civil Officers—concld.

7.	Mr. D. C. Patterson	...	...	Accounts.
8.	Babu Narendranath Datta	...	...	Ditto.
9.	„ Sasibhushan Satpathi	...	...	Ditto.
10.	„ Ramu Lal Varma	...	...	Ditto.
11.	Maulvi Mahammed Raza Karim	...	...	Ditto.

Police Officer.

12.	Mr. J. V. B. R. Bromage	...	...	Hindustani.

(iii) The officers, named below, have passed partially and are still liable to examination in the remaining subject or subjects mentioned opposite their names in column 4:—

Serial No.	Name.	Now passed in—	Still liable to examination in—
1	2	3	4
1	Mr. A. B Petter ...	Hindustani ...	Law and Accounts.
2	„ George Chandra ...	Law and Accounts ...	Hindustani.
3	Maulvi Abul Khair Muhammad Ishaque.	Law	Accounts.
4	Babu Surendra Nath Bhuttacharyya.	Do.	Ditto.
5	Babu Nanda Kisor Tripathi.	Bengali and Accounts ...	Law.
6	Babu Jyoti Prosad Das ...	Hindustani ...	Law and Accounts.
7	Maulvi Syed Mohammed Yakub	Law	Accounts.
8	Babu Radhika Lal De ...	Do.	Ditto.
9	Mr. W. L. Scott ...	Accounts	Bengali.
10	Maulvi Syed Mohamed Akbar.	Ditto	Law.
11	Babu Haripada Chatterjee	Hindustani ...	Law and Accounts.
12	„ Jnanendra Nath Banerjee.	Law and Hindustani ...	Accounts.
13	„ Satis Chandra Gupta	Law	Ditto.
14	„ Chittaranjan Mukherjee	Do.	Ditto.
15	„ Anadi Nath Sen ...	Accounts ...	Law.
16	Mr. H. Van'Grieken ...	Law	Bengali.
17	Maulvi Syed Abdul Latif	Accounts	Law.

III.—FOREST OFFICERS.

The officers, named below, have passed in the subjects mentioned against their names:—

1. Mr. P. Tinne ... Forest Law and Hindustani, Lower Standard.
2. „ W. R. LeG. Jacob ... Forest Law "with credit" and Land Revenue systems.

IV.—PUBLIC WORKS DEPARTMENT OFFICERS.

The undermentioned officers of the Public Works Department have passed in Law (Part A, B, or C) for Public Works Department officers:—

1.	Babu Kunja Behari Roy	...	...	Part "A."
2.	„ Sripati Ghose ...	...	...	„ "A."
3.	Mr. K. R. Bery ...	...	...	„ "C."
4.	„ C. Addams Williams	...	...	„ "C."

V.—MEDICAL OFFICERS.

The undermentioned officers of the Indian Medical Service have passed in Bengali by the colloquial test:—

1. Major F. P. Maynard, I.M.S.
2. Captain J. W. D. Megaw, „
3. „ A. F. Stevens, „
4. „ W. V. Coppinger, „
5. „ J. W. F. Rait, „

R. W. CARLYLE,
Offg. Chief Secy. to the Govt. of Bengal.

REVENUE DEPARTMENT.

NOTIFICATIONS.

No. 1228T.R.—The 12th June 1905.—Babu Shamshair Jang Bahadur, Sub-Deputy Collector, employed as an Assistant Settlement Officer in the districts of Monghyr, Bhagalpur and Purnea, is transferred, as Settlement Officer, to the district of Rangpur, with effect from the 5th May 1905.

Monghyr, Bhagalpur, Purnea and Rangpur.

No. 1229T.R.—The 12th June 1905.—Under section 3 (17) of the Bengal Tenancy Act, VIII of 1885, as amended by Act III (B.C.) of 1898, the Lieutenant-Governor is pleased to authorise Babu Shamshair Jang Bahadur, Sub-Deputy Collector, to discharge the functions of a Revenue Officer, in the district of Rangpur, under the provisions of that Act, so far as they relate to Revenue Officers.

Rangpur.

Babu Shamshair Jang Bahadur is also vested with the powers of a Settlement Officer, under Rule 1, Chapter VI of the Rules under the Bengal Tenancy Act.

No. 1311T.R.—The 16th June 1905.—Mr. R. G. A. Hannah, Extra Assistant Conservator of Forests, attached to the Sundarbans Division, is granted privilege leave for one month, under articles 246 and 260 of the Civil Service Regulations, with effect from the 3rd July 1905, or from such subsequent date as he may avail himself of it.

Sundarbans.

No. 1243T.R.—The 14th June 1905.—The Lieutenant-Governor sanctions the transfer of the following mauzas from the jurisdiction of thana Surajgarh to that of thana Lakhisarai, in the district of Monghyr, with effect from the date of this notification :—

Monghyr.

No.	Name of mauza.	Boundary Commissioner's list No.	Revenue Survey No.	Name of pargana.
1	Bhalwanpur Chandan or Madanpur	286	67	Chandanbhuka.
2	Esuf Chand or Kachua	287	57	
3	Ahsurbaskund	288	58	

No. 1295T.R.—The 16th June 1905.—It is notified for general information that declaration No. 2867M., dated the 16th November 1903, published at page 250, Part IB of the *Calcutta Gazette* of the 18th idem, for the acquisition of a plot of land required by the Sitamarhi Municipality for the Sitamarhi Upper Primary School, in the Sitamarhi town, pargana Mehila, zilla Muzaffarpur, is hereby cancelled.

Muzaffarpur.

R. W. CARLYLE,

Offg. Chief Secy. to the Govt. of Bengal.

DECLARATION.

No. 1220T.R.—The 12th June 1905.—Whereas it appears to the Lieutenant-Governor of Bengal that land is required to be taken by Government at the expense of the Khulna Municipality for a public purpose, viz., for extending the girls' school lane at Khulna, in the town of Khulna, pargana Hogla, zilla Khulna, it is hereby declared that for the above purpose a piece of land measuring, more or less, 1 cottah of standard measurement, bounded on the north by the Girls' school lane, on the east and west by Krista Kamini Debya's land, and on the south by the South Central Road, is required within the aforesaid town of Khulna.

Khulna.

This declaration is made under the provisions of section 6 of Act I of 1894, to all whom it may concern.

A plan of the land may be inspected in the office of the Municipality of Khulna.

R. W. CARLYLE,

Offg. Chief Secy. to the Govt. of Bengal.

DECLARATION.

No. 1227T.R.—The 12th June 1905.—Whereas it appears to the Lieutenant-Governor of Bengal that land is required to be taken by Government at the public expense for a public purpose, viz, for Betta Inspection Bungalow in Adjoy Right Embankment. No. 27 in the village of Betta, pargana Kanksha, zilla Burdwan, it is hereby declared that for the above purpose a piece of land measuring, more or less, 4 bighas 16 cottahs 4 chitaks of standard measurement, bounded on the north by the waste land of Mohananda Gorang and Iswar Mondal, on the south by the waste land of Bhuban Mohun Ghose, on the east by the waste land of Mohananda Gorang, and on the west by the waste land of Norottaun Mondal, homestead land of Prosanno Mohanta and Chandra Mohanta, is required within the aforesaid village of Betta.

Burdwan.

This declaration is made, under the provisions of section 6 of Act I of 1894, to all whom it may concern.

A plan of the land may be inspected in the office of the Executive Engineer, Northern Drainage and Embankment Division, Calcutta.

R. W. CARLYLE,

Offg. Chief Secy. to the Govt. of Bengal.

DECLARATION.

No. 1242T.R.—The 13th June 1905.— Whereas it appears to the Lieutenant-Governor of Bengal that land is required to be taken by Government at the public expense for a public purpose, viz., for additional land to be acquired for experimental farm in Cuttack in the villages of Bhadimul, Bidyadharpur and Kontilo, pargana Bakhrabad, zilla Cuttack, it is hereby declared that for the above purpose a piece of land measuring, more or less, 1 acre 31·1 poles of standard measurement, commencing from mauzas Bhadimul and Kontilo, passing through mauzas Bhadimul, Bidyadharpur, and terminating at Bidyadharpur and Kontilo, is required within the aforesaid villages of pargana Bakhrabad.

Cuttack.

This declaration is made, under the provisions of section 6 of Act I of 1894, to all whom it may concern.

A plan of the land may be inspected in the office of the Land Acquisition Officer, Irrigation Branch, Cuttack.

R. W. CARLYLE,

Offg. Chief Secy. to the Govt. of Bengal.

DECLARATION.

No. 1268T.R.—The 13th June 1905.—Whereas it appears to the Lieutenant-Governor of Bengal that land is required to be taken by Government at the public expense for a public purpose, viz., for the inspection bungalow in the village of Jahanabad, pargana Monoharshai, zilla Birbhum, it is hereby declared that for the above purpose a piece of land measuring, more or less, 3 bighas, 13 cottahs and 14 chitaks of standard measurement, bounded on the north by the cultivated land of Ahamad Sheikh and waste land of Maga Ram Das, on the west by the waste land of Ahamad Sheikh and Magoo Sheikh, on the south by the waste land of Magoo Sheikh and Ajoy left embankment, and on the east by the Ajoy left embankment, is required within the aforesaid village of Jahanabad

Birbhum.

This declaration is made, under the provisions of section 6 of Act I of 1894, to all whom it may concern.

A plan of the land may be inspected in the office of the Executive Engineer, Northern Drainage and Embankment Division.

R. W. CARLYLE,

Offg. Chief Secy. to the Govt. of Bengal.

DECLARATION.

No. 1269T.R.—The 15th June 1905.—Whereas it appears to the Lieutenant-Governor of Bengal that land is required to be taken by Government at the public expense for a public purpose, viz., for the construction of a building for an outpost in the village of Belkuchi (Delua), pargana Isofshahi, zilla Pabna, it is hereby declared that for the above purpose a piece of land measuring, more or less, 2 bighas 16 cottahs and 8 chitaks of standard measurement, bounded on the north by Ramani Pramanik and Afzal Karikar's land, on the south by Ramani Pramanik and Jago Bandhu Chakravarti's land, on the east by Dina Bandhu Majhi and Hem Chandra Mali's

Pabna.

land, and on the west by Dina Bandhu Pramanik's land in zamindari of Tagore zamindar of Calcutta, is required within the aforesaid village of Belkuchi (Delua).

This declaration is made, under the provisions of section 6 of Act I of 1894, to all whom it may concern.

A plan of the land may be inspected in the office of the Subdivisional Officer of Sirajganj.

R. W. CARLYLE,
Offg. Chief Secy. to the Govt. of Bengal.

DECLARATION.

No. 1274T.R.—The 12th June 1905.—Whereas it appears to the Lieutenant-Governor of Bengal that land is required to be taken by Government at the expense of the Local Board, Tippera, for a public purpose, viz., for a khal from Malipara to the east of Nobiabad khar with a width varying from 18 to 30 feet and passing through the undermentioned villages in the district of Tippera, it is hereby declared that for the above purpose a strip of land measuring, more or less, 4 bighas, 1 cottah and 7 chitaks of standard measurement, is required within the undermentioned villages :—

Tippera.

This declaration is made, under the provisions of section 6 of Act I of 1894, to all whom it may concern.

A plan of the land may be inspected in the office of the Collector of Tippera :—

Name of pargana.	Name of village.	Area.
		B. C. CH.
Bardakhat	... Nobiabad ...	2 15 10
Ditto	... Malipara ...	1 5 13
		4 1 7

R. W. CARLYLE,
Offg. Chief Secy. to the Govt. of Bengal.

NOTIFICATION.

No. 1291T R.—The 16th June 1905.—Whereas the Collector of the district of the 24-Parganas, after holding an inquiry under section 10 of the Bengal Embankment Act, 1882 (Bengal Act II of 1882), has submitted a report recommending the construction of an embankment from Kalikapore on the Panchannagram Government Embankment (No. 96 in Schedule D to the Bengal Embankment Act, 1873, as amended by Notifications No. 160, dated the 8th April 1884, and No. 275, dated the 20th July 1886) to a point on the Diamond Harbour Railway line between Garia and Jadobpur stations, for the protection of the lands of villages Rajapur, Raipur and other villages in that district; and whereas the Collector's report has received the support of the Commissioner of the Presidency Division and of the Board of Revenue, by whom it has been submitted for the consideration of the Lieutenant-Governor, the Lieutenant-Governor, having considered the report and the Board's recommendation, is pleased to order, under section 14 of the said Bengal Embankment Act, 1882, that the said embankment shall be constructed, at an estimated cost of Rs. 7,341, in accordance with the plans prepared by the Executive Engineer, Northern Drainage and Embankment Division, and approved by the Chief Engineer, Irrigation Department, Bengal.

24-Parganas.

R. W. CARLYLE,
Offg Chief Secy. to the Govt. of Bengal.

DECLARATION.

No. 1314T.R.—The 16th June 1905.—Whereas it appears to the Lieutenant-Governor of Bengal that land is required to be taken by Government at the public expense for a public purpose, viz., for jalkar Bungram bund, Murshidabad Branch, Eastern Bengal State Railway, at mile 22-23 in the village of Hashadanga, pargana Bugwan, zilla Nadia, it is hereby declared that for the above purpose a piece of land measuring, more or less, 1 bigha 7 cottahs 9 chitaks of standard measurement, bounded on the north, east and south by Hashadanga village land, and on the west by railway acquired land, is required within the aforesaid village of Hashadanga.

Nadia.

This declaration is made, under the provisions of section 6 of Act I of 1894, to all whom it may concern.

A plan of the land may be inspected in the office of the Collector of Nadia.

R. W. CARLYLE,
Offg. Chief Secy. to the Govt. of Bengal.

DECLARATION.

No. 1315 T.R.—The 19th June 1905.—Whereas it appears to the Lieutenant-Governor of Bengal that land is required to be taken by Government at the expense of the Commissioners for the Port of Calcutta for a public purpose, viz., for works to be constructed and carried out by the Commissioners for the Port of Calcutta, under the provisions of Act III (B.C.) of 1890, in the villages of Nalocaparah, Puddopukur, Kidderpore, and Benodepore, pargana Magura, thana Watgunge, district 24-Parganas, it is hereby declared that for the above purpose four pieces of land measuring, more or less, 40 bighas and 9 cottahs of standard measurement, bounded as follows, are required within the aforesaid villages of Nalocaparah, Puddopukur, Kidderpore, and Benodepore:—

24-Parganas.

Plot A.—On the north by Puddopukur West Bye-lane and public drain, on the south by Bisu Babu's Lane, on the east by Puddopukur West Lane and public drain, and on the west by public drain, Kedar Nath Banerjee's house and Bye-lane.

Plot B.—On the north by Port Commissioners' land, Brindaban Dutt's tenanted house, Balai Lall, Kanai Lall and Ananda Lall Chundra's dwelling, Prankrisna Mookerjee's compound and Puddopukur West Bye-lane, on the south by Raj Kristo Bairagee's tenanted land, Nanda Lall Bose's dwelling and Hemangini Dassee's dwelling and tenanted land, on the east by Degumber Mookerjee's dwelling house, Raj Kristo Bairagee's tenanted land, Kedar Nath Banerjee, Hemangini Dassee and Nilmonee Dass' tank, Hemangini Dassee's house and tenanted land, Hari Sadhu Khan's house, Dinu Nath Banerjee's house and Hari Matee Dassee, Obhaya Charan Banerjee and Pana Ullah's lands, and on the west by Sustitollah Road, Brindaban Dutt's tenanted house, Bolai Lall, Kanai Lall, Ananda Lall Chundra's dwelling house, and Prankrisna Mookerjee's compound.

Plot C.—On the north by Lakhy Narayan Gunge Lane, Debendra Nath Mukerjee's pucca house and his tenanted lands, on the south by public drain and Puddopukur Square Road, on the east by Puddopukur Square Road and Puddopukur Road, and on the west by Puddopukur West Lane and Lakhy Narayan Gunge Lane.

Plot D.—On the north by Kootree Road, Uma Charan Bairagee's tenanted pucca house, vacant land belonging to the Emambara, Jadab Chandra Banerjee's house, Deb Kumar Mandal's house, Behary Lall Ghose's house, and the pucca tenanted house and compound of Bibi Marium, Mahammad F. Rahman and Bibi Azeeban, on the south by a lane, *debutter* land of the Bhukailash Estate, Umesh Chunder Mookerjee's tenanted lands and Kala Chand Jana's compound, pucca house and *thakoorbari*, on the east by *debutter* land belonging to the Bhukailash Estate, Umesh Chunder Mukerjee's tenanted lands, Berrapukur Road, the pucca tenanted house and compound of Bibi Marium, Mahammad F. Rahman and Bibi Azeeban, Gobordhon Mukerjee's house and compound, Kala Chand Jana's compound, Berrapukur Road, vacant land belonging to the Emambara and Uma Charan Bairagee's pucca tenanted house, and on the west by Naluapara Road and *debutter* land belonging to the Bhukailash Estate.

This declaration is made, under the provisions of section 6 of Act I of 1894, to all whom it may concern.

A plan of the land may be inspected in the office of the Chief Engineer of the Calcutta Port Commissioners.

R. W. CARLYLE,

Offg. Chief Secy. to the Govt. of Bengal.

OFFICE OF THE SUPERINTENDENT, PROVINCIAL SURVEYS, BENGAL.

NOTIFICATION No. $\frac{1}{E-9}$.

Dated Dinapur, the 3rd June 1905.

MR. E. F. BERKELEY, Extra Assistant Superintendent, fourth grade, Survey of India, is allowed privilege leave for two months and fifteen days, with effect from the 13th May 1905, under article 260, Civil Service Regulations.

R. T. CRICHTON, MAJOR, I.A.,

Supdt., Provincial Surveys, Bengal.

FINANCIAL DEPARTMENT.

NOTIFICATIONS.

No. 246T.—S.R.—The 14th June 1905.—In exercise of the powers conferred by section 11, clauses (*a*) and (*b*), of the Sea Customs Act, VIII of 1878, and in supersession of the Notification No. 864T.F., dated the 17th October 1896, published in Part I, page 1068, of the *Calcutta Gazette* of the 21st idem, the Lieutenant-Governor of Bengal is pleased to declare Nillah, on the Na-af river, to be a port for the shipment of husked and unhusked rice on account of which duty has been or will be paid, or security has been or will be deposited, at the port of Chittagong and to define the limits of the said port as follows:—

Chittagong.

On the South.—A straight line drawn from the south-eastern end of Shapur Island in the direction of a pillar on Point Cypress as far as the mid-channel of the Na-af river.

On the North.—A straight line drawn from the mouth of the Ucha stream in the direction of the mouth of the Gaungdaung stream as far as the mid-channel of the Na-af river.

On the West.—A line drawn parallel to and 50 yards to the west of the high-water mark of the Na-af river.

On the East.—A line drawn down the mid-channel of the Na-af river.

No. 247T.—S.R.—The 14th June 1905.—In exercise of the power conferred by section 157, clause (*c*), of the Sea Customs Act, VIII of 1878, the Lieutenant-Governor of Bengal prescribes the following conditions under which husked and unhusked rice may be shipped at the port of Nillah:—

Chittagong.

1. The master of a vessel at Chittagong, who desires to load husked or unhusked rice at Nillah or on the Na-af, shall enter in his manifest the full quantity of husked or unhusked rice which his vessel is capable of carrying, and shall likewise enter the port or ports to which he is bound, and shall deliver the manifest in duplicate to the Collector of Customs at Chittagong.

2. He shall either deposit the export duty on this quantity with the Collector, or shall execute a bond under section 161 of the Sea Customs Act in a sum not exceeding twice the export duty, that the goods shall be landed at the place for which the vessel is entered outwards.

3. On presentation of the manifest mentioned in rule 1, the Collector of Customs at Chittagong shall sign and deliver the original to the master as his port clearance, and after the vessel has loaded on the Na-af, the manifest shall be endorsed by the Superintendent of Customs at Nillah, who will present the original to the master as his port clearance and will send the duplicate to the Collector of Customs at Chittagong.

4. On production of a certificate from the proper officer of the Customs port to which the vessel is said to be bound of her arrival and discharge, the Collector of Customs at Chittagong shall refund to the master or his agent the export duty deposited under rule 2, or shall cancel the security bond.

No. 280T.O.—The 17th June 1905.—Mr. A. Burt, Assistant Opium Agent, in charge of the Dehri subdivision of the Shahabad Sub-Agency, is granted leave for three months on medical certificate under Article 336 of the Civil Service Regulations, with effect from the 1st June 1905 or any subsequent date on which he may avail himself of it.

Shahabad.

E. A. GAIT,
Offg. Secy. to the Govt. of Bengal.

MEDICAL DEPARTMENT.

No. 1128T.M.—The 16th June 1905.—Captain A. C. MacGilchrist, I.M.S., is appointed temporarily to act as a Civil Surgeon and is posted to Midnapore.

Midnapore.

No. 1130T.M.—The 16th June 1905.—Major F. O'Kinealy, I.M.S., is appointed to act as Civil Surgeon of Darjeeling during the absence, on deputation, of Major F. P. Maynard, I.M.S., or until further orders.

Darjeeling.

No. 1160T.M.—The 17th June 1905.—Captain J. W. D. Megaw, I.M.S., on special duty, is appointed to act as Resident Physician, Medical College hospital, during the absence, on deputation, of Captain E. E. Waters, I.M.S., or until further orders.

Calcutta.

No. 1164T.M.—The 17th June 1905.—Captain W. V. Coppinger, I.M.S., is appointed temporarily to act as a Civil Surgeon and is posted to Jalpaiguri, with effect from the forenoon of the 5th May 1905.

Jalpaiguri.

No. 1166T.M.—The 17th June 1905.—Dr. R. H. Pulipaka, Civil Surgeon, is transferred from Jalpaiguri to Rangpur, with effect from the afternoon of the 7th May 1905.

Jalpaiguri.
Rangpur.

No. 1168T.M.—The 17th June 1905.—Captain G. King, I.M.S., is appointed temporarily to act as a Civil Surgeon and is posted to Jessore, with effect from the 12th May 1905.

Jessore.

No. 1170T.M.—The 17th June 1905.—Lieutenant C. A. Gourlay, I.M.S., is appointed, with effect from the forenoon of the 19th May 1905, to act as Deputy Sanitary Commissioner, Metropolitan and Eastern Bengal Circle, during the absence, on deputation, of Captain W. W. Clemesha, I.M.S., or until further orders.

No. 1172T.M.—The 17th June 1905.—Captain H. B. Foster, I.M.S., is appointed temporarily to act as a Civil Surgeon and is posted to Dinajpur, with effect from the forenoon of the 26th May 1905.

Dinajpur.

No. 1174T.M.—The 17th June 1905.—Assistant Surgeon Umes Chandra Das acted as a Civil Surgeon and was posted to Rangpur, with effect from the forenoon of the 18th April to the afternoon of the 7th May 1905.

Rangpur.

E. A. GAIT,
Offg. Secy. to the Govt. of Bengal.

NOTIFICATION.

No. 1192T.M.—The 17th June 1905.—Whereas by Notification No. 3735Medl., dated the 17th July 1897, published at pages 174 to 176, Part 1B of the *Calcutta Gazette* of the 21st July 1897, it was notified that the Lieutenant-Governor of Bengal, in the exercise of the powers conferred by sections 4 and 5 of the Charitable Endowments Act, 1890, did thereby order and direct that the Government Promissory Notes of which the particulars were contained in the First Schedule thereunder written and the land and buildings mentioned and described in paragraph 12 of the Second Schedule thereunder written should as from the date of the first publication of the said notification vest and be thenceforth vested in the Treasurer of Charitable Endowments for the territories subject to the Government of Bengal to be held by him and his successors (subject to the provisions of the said Charitable Endowments Act, 1890, and any rules from time to time framed thereunder by the Governor-General in Council) upon trust for ever thereafter to receive the interest of the said Government Promissory Notes and from time to time to apply the same in terms of the scheme set forth in the Second Schedule thereunder written for the endowment and maintenance of the Iswara Chandra Charitable Dispensary at Amragori;

Howrah.

It is hereby notified that the Lieutenant-Governor of Bengal, in exercise of the powers conferred by sections 4 and 5 of the Charitable Endowments Act, VI of 1890, and upon the application and with the concurrence of Babu Iswara Chandra Hazra of Amragori, doth hereby order and direct that the said scheme set forth in the Second Schedule to the above recited notification shall, as from the date of the first publication in the *Calcutta Gazette* of this notification, be and thenceforth remain varied or modified by the substitution in place of paragraph 9 of the said scheme of the paragraph set forth in the First Schedule hereunder written, and further that the Government Promissory Notes belonging to the said Babu Iswara Chandra Hazra, of which the particulars are contained in the Second Schedule hereunder written, shall as from the date of the first publication in the *Calcutta Gazette* of this notification vest and be thenceforth vested in the Treasurer of Charitable Endowments for the territories subject to the Government of Bengal to be held by him, together with the property vested by the said recited notification upon the trusts and to and for the purposes declared and mentioned by and in the said recited notification and the said scheme as so modified as aforesaid.

The First Schedule.

9. The duties of the Committee shall be as follows:—

They shall appropriate and apply the interest of the Government securities for Rs. 19,000 vested in the Treasurer of Charitable Endowments for the purposes of the above endowment (such interest being paid to them by the said Treasurer as and when the same accrues), together with such sum and sums of money as shall be allotted and paid to them for the purpose by the District Board of Howrah, to the expenditure from time to time determined by the District Board of Howrah to be necessary for the maintenance and upkeep of six beds for the treatment of the in-door patients in the said dispensary and also to the expenditure denoted in the margin hereof or from time to time specified by the District Board of Howrah for the management of the said dispensary.

		Rs.
I.—For out-door ward—		
(1)	Medical Officer at Rs. 30 per mensem	360
(2)	Compounder at Rs. 12 per mensem	144
(3)	Servant and sweeper at Rs. 7 per mensem	84
(4)	Medical stores	400
	Country medicines	25
(5)	Contingencies	60
	Total	1,073
II.—For in-door ward—		
(1)	Medical Officer, allowance of Rs. 5 per mensem	60
(2)	Servant and sweeper, allowance of Rs. 2 per mensem	24
(3)	Cook at Rs. 7 per mensem	84
(4)	Mehter at Rs. 10 per mensem	120
(5)	Medical stores	150
	Country medicines	12
(6)	Contingencies	24
(7)	Diet of patients	360
		834
	Furniture for both the wards	50
	GRAND TOTAL	1,957

The Second Schedule.

						Rs.
053362	...	3½ per cent. loan of	1854-55	...	...	1,000
053363	...	3½ "	"	"	...	1,000
058605	...	3½ "	"	"	...	500
057819	...	3½ "	"	"	...	1,000
064366	...	3½ "	"	"	...	500
150303	...	3½ "	"	of 1865	...	1,000
141925	...	3½ "	"	"	...	1,000
145780	...	3½ "	"	"	...	1,000

E. A. GAIT,
Offg. Secy. to the Govt. of Bengal.

JUDICIAL DEPARTMENT.

No. 2930 A.

APPOINTMENTS AND TRANSFERS.

No. 1707A.D.—The 19th June 1905.—Babu Sris Kumar Som, M.A., B.L., is appointed to act as a Munsif in the district of Jessore, to be ordinarily stationed at Jhenida, during the absence, on leave, of Lala Damodar Prosad, or until further orders.

Jessore.

No. 1709A.D.—The 19th June 1905.—Babu Shib Charan Sil, B.L., is appointed to act as a Munsif in the district of Dacca, to be ordinarily stationed at Munshiganj, during the absence, on leave, of Babu Jatindra Chandra Bose, or until further orders.

Dacca.

No. 1727A.D.—The 19th June 1905.—Babu Brajendra Kumar Biswas, B.L., is appointed to act as a Munsif in the district of Tirhut, to be ordinarily stationed at Hajipur, during the absence, on leave, of Babu Satish Chandra Basu, or until further orders.

Tirhut.

LEAVE.

No. 1624A.D.—The 16th June 1905.—Babu Bepin Behary Chatterjee, Subordinate Judge, Jessore, is allowed leave for fifteen days, under article 271 of the Civil Service Regulations, in extension of the leave granted to him under the order of the 22nd April 1905.

Jessore.

No. 2923A.—The 6th June 1905.—Babu Jotindra Chandra Sen, Munsif of Kandi, in the district of Murshidabad, is allowed leave for seven days, under article 271 of the Civil Service Regulations, in extension of the leave granted to him under the order of the 4th May 1905.

Murshidabad.

No. 2924A.—The 8th June 1905.—Babu Bhupal Chandra Sen, Munsif of Bankura, is allowed leave for fifteen days, under article 271 of the Civil Service Regulations, in extension of the leave granted to him under the order of the 28th April 1905.

Bankura.

No. 2925A.—The 10th June 1905.—Babu Debendra Nath Sarkar, Munsif of Bhadrak, in the district of Cuttack, is allowed leave for six weeks, under article 271 of the Civil Service Regulations, with effect from the 1st June 1905.

Cuttack.

The 10th June 1905.—Babu Ananda Kisor Datta Ray, Munsif of Serampore, in the district of Hooghly, is allowed leave for ten days, under article 271 of the Civil Service Regulations, in extension of the leave granted to him under the order of the 11th May 1905.

Hooghly.

The 10th June 1905.—Babu Harendra Narayan Guha, Munsif of Tamluk, in the district of Midnapore, is allowed leave for twenty eight days, under article 271 of the Civil Service Regulations, in extension of the leave granted to him under the order of the 13th May 1905.

Midnapore.

No. 2926A.—The 14th June 1905.—Lala Damodar Prosad, Munsif of Jhenida, in the district of Jessore, is allowed leave for thirty eight days, under article 271 of the Civil Service Regulations, with effect from the 24th June 1905, or from the date on which he may be relieved.

Jessore.

The 14th June 1905.—Babu Satish Chandra Basu, Munsif of Hajipur, in the district of Tirhut, is allowed leave for one month, under article 271 of the Civil Service Regulations, with effect from the 25th June 1905, or from the date on which he may be relieved.

Tirhut.

No. 2927A.—The 15th June 1905.—Babu Rama Prasad Moitra, Munsif of Bankura, is allowed leave for seven days, under article 271 of the Civil Service Regulations, in extension of the leave leave granted to him under the order of 26th May 1905.

Bankura.

No. 2928A.—The 19th June 1905.—Babu Behari Lal Sarkar, Munsif of Patuakhali, in the district of Backergunge, is allowed leave for three weeks, under article 271 of the Civil Service Regulations, with effect from the date on which he availed himself of it.

Backergunge.

The 19th June 1905.—Babu Trailokya Nath Som, Munsif, on leave, is allowed leave for three months, under article 339 of the Civil Service Regulations, in extension of the leave granted to him under the order of the 2nd December 1904.

The 19th June 1905.—Babu Jotindra Chandra Bose, Munsif of Munshiganj, in the district of Dacca, is allowed leave for fifteen days, under article 271 of the Civil Service Regulations, with effect from the date on which he availed himself of it.

Dacca.

The 19th June 1905.—Babu Jogendra Nath Mookerjee, Munsif of Burdwan, is allowed leave for six months, viz., privilege leave for two months and eight days under article 271 of the Civil Service Regulations, and furlough for the remaining period under article 338 of the same Regulations, with effect from the 27th March 1905, in supersession of the leave granted to him under the order of the 23rd March 1905.

Burdwan.

POWERS.

No. 1597A.D.—The 14th June 1905.—Babu Hari Bhushan De, Deputy Magistrate, Serampore, Hooghly, is vested with the power to try summarily the offences mentioned in section 260 of the Code of Criminal Procedure.

Hooghly.

No. 1602A.D.—The 15th June 1905.—Under the authority vested in him by section 357, sub-section (2), of the Code of Criminal Procedure, Act V of 1898, the Lieutenant-Governor empowers Babu Dhirakshan Singh, substantive *pro tempore* Deputy Magistrate, Gaya, to take down evidence in criminal cases in the English language.

Gaya.

No. 1619A.D.—The 16th June 1905.—Babu Hara Chandra Ghosh, Deputy Magistrate, Rajshahi, is vested with the power to try summarily the offences mentioned in section 260 of the Code of Criminal Procedure.

He is also vested with powers under section 110 of that Code.

Rajshahi.

No. 1647A.D.—The 17th June 1905.—Mr. J. H. Price, who has, under the order of this date, been appointed substantively *pro tempore* to be a Deputy Magistrate of the eighth grade and posted to the head-quarters station of the 24-Parganas district, is vested with the powers of a Magistrate of the third class.

24-Parganas.

No. 1650A.D.—The 17th June 1905.—In exercise of the power conferred by sub-section (1) of section 565 of the Code of Criminal Procedure, 1898, the Lieutenant-Governor is pleased to empower Maulvi Abdus Samad and Babu Jogendra Nath Chuckerbutty, Magistrates of the first class, in the district of Manbhum, to order, at the time of passing sentence of imprisonment on any person referred to in that sub-section, that the residence or change of residence of such person after release shall be notified as provided by the rules made under sub-section (3) of the section.

Manbhum.

No. 1652A.D.—The 17th June 1905.—Mr. J. A. L. Swan, Officiating Joint-Magistrate, 24-Parganas, is vested with powers under section 190, sub-section (1), clause (c), of the Code of Criminal Procedure.

24-Parganas.

No. 1713A.D.—The 19th June 1905.—Mr. J. D Sifton, Officiating Joint-Magistrate, who has, under the order of this date, been posted temporarily to the head-quarters station of the Backergunge district, is vested with the powers of a Magistrate of the first class.

Backergunge.

No. 1734A.D.—The 19th June 1905.—Babu Ajoy Chunder Das, Deputy Magistrate, Mymensingh, is vested with the powers of a Magistrate of the first class. He is also vested with powers under section 110 of the Code of Criminal Procedure.

Mymensingh.

R. W. CARLYLE,

Offg. Chief Secy. to the Govt. of Bengal.

APPOINTMENTS AND TRANSFERS.

No. 1998J.D.—The 14th June 1905.—The gentlemen named below are re-appointed to be Honorary Magistrates of the Benches mentioned opposite their names in the district of Patna :—

Patna.

Maulvi Syed Feda Hosain „ Nur Muhammed	Bihar	Independent Bench.
Babu Gopi Nath Mattey „ Nareshwar Sahay	Sadikpur	ditto.
„ Damodar Prasad Maulvi Syed Shah Kamal „ Syed Zahiruddeen	Bankipore	ditto.
Babu Bhagwat Narain Singh „ Mohendra Nath Chakravarti	Jhauganj	ditto.

No. 2155J.D.—The 17th June 1905.—The gentlemen named below are re-appointed to be Honorary Magistrates of the Benches mentioned against their respectives names in the district of Faridpur :—

Faridpur.

Babu Loke Nath Chakravarti	Faridpur	Independent Bench.
„ Upendra Nath Sen	Madaripur	ditto.
„ Tara Prasanna Bhattacharjee Chaudhuri „ Jogesh Chandra Rai	Palang	ditto.

POWERS.

No. 1999J.D.—The 14th June 1905.—The gentlemen named below, who have been re-appointed to be Honorary Magistrates of the Benches mentioned opposite their names in the district of Patna, are vested with the powers of a Magistrate of the third class :—

Patna.

Maulvi Syed Feda Hosain „ Nur Muhammed	Bihar	Independent Bench.
Babu Damodar Prasad „ Bhagwat Narain Singh	Bankipore	ditto.
„ Mohendra Nath Chakravarti	Jhauganj	ditto.

No. 2001J.D.—The 14th June 1905.—Maulvi Syed Shah Kamal, who has been re-appointed to be an Honorary Magistrate of the Independent Bench at Bankipore, in the district of Patna, is vested with the powers of a Magistrate of the second class. He is also authorized to sit singly for the trial of such cases as may be made over to him by the Magistrate of the district.

Patna.

No. 2003J.D.—The 14th June 1905.—Maulvi Syed Zahiruddeen, who has been re-appointed to be an Honorary Magistrate of the Independent Bench at Bankipore, in the district of Patna, is vested with the powers of a Magistrate of the first class. He is also authorized to sit singly for the trial of such cases as may be made over to him by the Magistrate of the district.

Patna.

No. 2005J.D.—The 14th June 1905.—Under the authority vested in him by section 357, sub-section (2) of the Code of Criminal Procedure, Act V of 1898, the Lieutenant-Governor empowers Maulvi Syed Zahiruddeen, who has been re-appointed to be an Honorary Magistrate of the Independent Bench at Bankipore, in the district of Patna, to take down evidence in criminal cases in the English language. He is also vested with the power to try summarily the offences mentioned in section 260 of the Criminal Procedure Code.

Patna.

No. 2007J.D.—The 14th June 1905.—Babu Nareshwar Sahay, who has been re-appointed to be an Honorary Magistrate of the Independent Bench at Sadikpur, in the district of Patna, is vested with the powers of a Magistrate of the second class. He is also authorised to sit singly for the trial of such cases as may be made over to him by the Magistrate of the district.

Patna.

No. 2009J.D.—The 14th June 1905.—Babu Gopi Nath Mattey, who has been re-appointed to be an Honorary Magistrate of the Independent Bench at Sadikpur, in the district of Patna, is vested with the powers of a Magistrate of the first class. He is also authorized to sit singly for the trial of such cases as may be made over to him by the Magistrate of the district.

Patna.

No. 2011J.D.—The 14th June 1905.—Under the authority vested in him by section 357, sub-section 2 of the Code of Criminal Procedure, Act V of 1898, the Lieutenant-Governor empowers Babu Gopi Nath Mattey, who has been re-appointed to be an Honorary Magistrate of the Independent Bench at Sadikpur, in the district of Patna, to take down evidence in criminal cases in the English language.

No. 2156J.D.—The 17th June 1905.—The gentlemen named below, who have been re-appointed to be Honorary Magistrates of the Benches mentioned against their respective names in the district of Faridpur, are vested with the powers of a Magistrates of the third class:—

Faridpur.

Babu Loke Nath Chakravarti	Faridpur	Independent Bench.
„ Upendra Nath Sen	Madaripur	ditto.
„ Tara Prasanna Bhattacharjee Chaudhuri	Palang	ditto.
„ Jogesh Chandra Rai		

Babu Loke Nath Chakravarti is also empowered, under section 357, sub-section 2 of the Code of Criminal Procedure, Act V of 1898, to take down evidence in criminal cases in the English language.

No. 2173J.D.—The 17th June 1905.—Babu Srish Chandra Sarbadhikari, a Presidency Magistrate for the town of Calcutta, is empowered to sit singly for the trial of cases.

Calcutta.

No 2185J.D.—The 17th June 1905.—Babu Ram Dhari Sinha, an Honorary Magistrate of the Motihari Independent Bench, in the district of Champaran, is vested with the powers of a Magistrate of the second class. He is also authorized to sit singly for the trial of such cases as may be made over to him by the District Magistrate.

Champaran.

H. W. C. CARNDUFF,
Offg. Secy. to the Govt. of Bengal.

NOTIFICATIONS.

No. 2145J.D.—The 17th June 1905.—It is hereby notified for general information that the police-station at Dewanserai, in the district of Murshidabad, has been moved, as a temporary measure, from its present site at Dewanserai to Lalgola.

Murshidabad.

No. 2167J.D.—The 17th June 1905.—It is hereby notified that the Proclamation No. 1301J.D., dated the 19th May 1905, published in the *Calcutta Gazette* of the 24th idem, regarding the quartering of an additional police force in the village of Kusma in the district of Monghyr, will take effect from the 1st instant, the date on which the additional police force was entertained.

Monghyr.

No. 2198J.D.—The 17th June 1905.—In exercise of the power vested in him by section 14, sub-section (1) of the Code of Criminal Procedure, 1898, the Lieutenant-Governor is pleased to confer upon each of the under-mentioned Presidents of panchayats in the district of Tippera the powers of a Magistrate under sections 64, 127 and 128 of the same Code, and to declare that the said powers may be exercised by the said officers within the limits of the Unions noted against their respective names

Tippera.

2. The Lieutenant-Governor is further pleased to declare, in pursuance of sub-section (2) of the said section 14, that the said powers are conferred and may be exercised by each of the said officers for a period of three years only from the date of this notification:—

Thana Nasirnagar.

Name of President.	Name and No. of Union.
Babu Radhika Charan Das	... Fandauk, VI.
Thana Nabinagar.	
Babu Jamini Kant Mukherjee	... Kadair, X.

H. W. C. CARNDUFF,
Offg. Secy. to the Govt. of Bengal.

PUBLIC WORKS DEPARTMENT.

ESTABLISHMENT.

The 13th June 1905.

No. 136.—Mr. G. L. Searight, Executive Engineer, first grade, is appointed Under-Secretary to this Government in the Irrigation and Railway Branches, with effect from the 15th June 1905, until further orders.

The 17th June 1905.

No. 140.—Rai Sahib Prosonno Coomar Pal, Sub-Engineer, first grade (Honorary Assistant Engineer), Mahanadi Division, is appointed to officiate as Executive Engineer of that division during the absence, on leave, of Mr. Bishan Swarup, Executive Engineer, or until further orders.

W. A. INGLIS,
Secy. to the Govt. of Bengal.

The 20th June 1905.

No. 143.—Mr. K. R. Bery, Assistant Engineer, Champaran Division, is granted privilege leave for two months and 20 days under article 260 of the Civil Service Regulations, with effect from the 15th July 1905, or such subsequent date as he may avail himself of it.

W. A. INGLIS,
Secy. to the Govt. of Bengal.

IRRIGATION DEPARTMENT.

The 20th June 1905.

No. 18.—Notification.—In accordance with the last clause of section 43 of Act II (B.C.) of 1882 (the Bengal Embankment Act), the Lieutenant-Governor is pleased to direct that the embankment described below, which is not mentioned in Schedule D to Bengal Act VI of 1873, shall be included therein :—

No. 94A (Mowla cross-bund).

Cross embankment to protect the village of Mowla (Rajapur), in the district of Murshidabad, connecting the existing portion of embankment No. 94 of the Bhagirathi left embankment, in mile 34, chain 12, with the new retired line of the same embankment in mile 34, chain 13 20. The length of this cross embankment is 507 feet.

W. A INGLIS,
Secy. to the Govt. of Bengal.

[Second Publication.]

The 13th June 1905.

No. 17.—Notification.—In exercise of the powers conferred on him by sections 99 and 78 of Act III (B.C.) of 1876, the Hon'ble the Lieutenant-Governor of Bengal proposes to make the following alterations and additions in rules 5, 6, 9, 15, 47 and 48 of the Water-rate Rules for the Orissa Canals and in Appendices III and VIII thereto.

W. A. INGLIS,
Secy. to the Govt. of Bengal.

Existing rules.	*Proposed rules.*
5. The preliminary application for a lease for a term of years, either new or renewal, may be of an informal nature, but it must be in writing. It may be received either at the Subdivisional or Sectional Canal office: in the latter case, the Sectional Officer shall forward it immediately to the Subdivisional Canal Officer:	5. The preliminary application for a lease for a term of years, either new or renewal, may be of an informal nature, but it must be in writing. It may be presented at any time; but if presented after the 1st of April in the year during which the lease is to commence, an additional charge of 1 pice per *goont* of local measure, equivalent to 6 annas 3 pies per mán, will be made for the year following that in which the lease has been applied for. The Subdivisional Canal Officer shall, at a date not less than three months and not more than six months before the expiry of a lease for a term of years, send a notice in writing to the representative of the cultivators informing him of the fact. Such notice shall request that early intimation may be sent if it is desired to renew the lease, and shall draw attention to the extra charge which will be incurred if the application is presented after the 1st of April.
The Subdivisional Canal Officer as soon as he has, by personal enquiry or by an enquiry made by the Sectional Officer, satisfied himself that the land in question constitutes a definite block, and that it can be irrigated, shall at once inform the Divisional Canal Officer, giving such particulars as that officer may direct, and shall ask his formal approval to the lease being proceeded with. On receipt of such approval, he shall forward the preliminary application to the zilladar in order that the detailed assessment of the block may be taken in hand. A copy of the map alluded to in rule 4 shall be sent with the application, and this constitutes the basis of the assessment.	The preliminary application may be presented either at the Subdivisional or Sectional Canal office. The Subdivisional Canal Officer as soon as he has, by personal enquiry or by an enquiry made by the Sectional Officer, satisfied himself that the land in question constitutes a definite block, and that it can be irrigated, shall at once inform the Divisional Canal Officer, giving such particulars as that officer may direct, and shall ask his formal appoval to the lease being proceeded with. On receipt of such approval, he shall forward the preliminary application to the zilladar in order that the detailed assessment of the block may be taken in hand. A copy of the map alluded to in rule 4 shall be sent with the application, and this constitutes the basis of the assessment.

Existing rules.	*Proposed rules.*
6. The zilladar on receipt of the application shall depute an amin to prepare the khasra or detailed assessment paper. This shall be done on the ground with the aid of the revenue survey map and khasra. Should the survey map and khasra not be available, the amin shall make a sketch map and shall measure the areas with a chain or measuring-rod.	6. The zilladar on receipt of the application hall depute an amin to prepare the khasra or detailed assessment paper. This shall be done on the ground with the aid of the revenue survey map and khasra. Should the survey map and khasra not be available, the amin shall make a sketch map and shall measure the areas with a chain or measuring-rod.
	The amin shall write out daily in the form provided for the purpose abstracts for each cultivator of the entries in the khasra relating to lands in his occupation and shall deliver such abstracts, to the representative for distribution.
9. Should it happen that the cultivators of the block proposed for lease are not unanimous, and that certain of them decline to sign the application, the zilladar shall report the matter to the Subdivisional Canal Officer. This officer shall hold a local enquiry, recording the statements of the persons who decline to sign and recording his personal opinion on the reasons given. He shall then send a report to the Divisional Canal Officer, who shall decide if the lease may be accepted, excluding the fields in the occupation of the persons who decline to sign or whether the lease shall be declined. The Divisional Canal Officer is authorized to grant a lease when not less than 95 per cent. of the net irrigable area of the block has been signed for. In particular cases should it be desirable to grant a lease even though an area larger than 5 per cent. of the block has not been signed for, this may be done on the written order of the Superintending Engineer. The reasons for granting the lease shall be fully recorded	9. On the 1st December of each year, or on any subsequent date, the Divisional Canal Officer may decline to proceed with a lease for a term of years the application for which has not been fully signed by that date. Provided that the form of application shall have been tendered to the cultivators through their representative for signature after the adjustment of any matters in dispute with regard to classification or area of land not less than 15 days before the 1st December or subsequent date. Any provisional lease covering the same lands on which a supply of water may have been granted pending the completion of the lease for a term of years shall then become the substantive lease for the season and shall be put in force. 9A. Should it happen that the cultivators of the block proposed for lease are not unanimous, and that certain of them decline to sign the application, the zilladar shall report the matter to the Subdivisional Canal Officer. This officer shall hold a local enquiry, recording the statements of the persons who decline to sign and recording his personal opinion on the reasons given. He shall then send a report to the Divisional Canal Officer, who shall decide if the lease may be accepted, excluding the fields in the occupation of the persons who decline to sign or whether the lease shall be declined. The Divisional Canal Officer is authorized to grant a lease when not less than 95 per cent. of the net irrigable area of the block has been signed for. In particular cases should it be desirable to grant a lease even though an area larger than 5 per cent. of the block has not been signed for, this may be done on the written order of the Superintending Engineer. The reason for granting the lease shall be fully recorded.
15. Applicants for a lease for a term of years or for a season lease for the irrigation of autumn rice who may require water before the lease has been concluded can obtain a supply on tendering an application for a provisional lease in the form given as Appendix No. III to these rules. This application must be signed in the presence of the Sectional Officer or of some other responsible officer nominated for the purpose by the Subdivisional Canal Officer. The signatures should be those of the leading cultivators in the block in question, and they should represent holders of not less than 75 per cent. of the irrigable land within the block. As soon as the Subdivisional Canal Officer receives the application duly signed, he shall issue a permit in the form given as Appendix No. VIII to these rules, and shall at once supply water.	15. Applicants for a lease for a term of years or for a season lease for the irrigation of autumn rice who may require water before the lease has been concluded can obtain a supply on tendering an application for a provisional lease in the form given as Appendix No. III to these rules. This application must be signed in the presence of the Sectional Officer or of some other responsible officer nominated for the purpose by the Subdivisional Canal Officer. As soon as the Subdivisional Canal Officer receives the application duly signed, he shall issue a permit in the form given as Appendix No. VIII to these rules, and shall at once supply water.
47. The chaukidar of the village or such other representative as, with the consent of a majority of the lessees and with the approval of the Subdivisional Canal Officer, may be appointed for the purpose by the Deputy Collector, or other officer in charge of the Revenue	47. Before any lease other than a special lease for *dalua* rice provided for in rule 19 is entered into, the Deputy Collector or other officer in charge of the Revenue Division shall select as representative of the cultivators a person or persons who must have a direct interest in

Existing rules.

Division, in consideration of his giving assistance in the matters noted below, shall be entitled to free irrigation of lands in his own occupation which may be within the boundaries of a block leased for a term of years, or to which water is supplied under a season lease other than a special lease for *dalwa* rice provided for in rule 19, subject to a limit of 3 per cent. on the total area assessed:—

(*i*) In assisting the amin while preparing the assessment papers for land, which it is proposed to lease for a term of years, or for lands which have been irrigated under season leases.

(*ii*) In procuring and attesting the signatures to the applications for long leases or for season leases for rice.

(*iii*) In receiving the individual notices of amounts assessed, and in distributing them to the persons concerned.

(*iv*) In attending when required at enquiries into complaints.

(*v*) In giving information to the Subdivisional or sectional officers regarding any insufficiency of the supply of water or of any misuse of the supply of water.

(*vi*) In giving information to the zilladar with respect to alterations in the occupancy of lands under lease for a term of years.

(*vii*) In assisting the tahsildar in collecting the rates.

48. The chaukidar or other representative shall only be entitled to the free irrigation if he renders the assistance required to the best of his ability. It shall be within the discretion of the Deputy Collector or other officer in charge of the Revenue Division to disallow the free irrigation and to recover the rates from the chaukidar or other representative for reasons duly recorded in writing.

Proposed rules.

the land covered by the lease. The selection shall be made with the consent of a majority of the cultivators having an interest in the lease, and in consultation with the Subdivisional Canal Officer. The person or persons so selected shall continue as representative for the village unless he or they resign the office, or unless the Deputy Collector or other officer in charge of the Revenue Division shall, for reasons recorded in writing, remove him or them from the office.

47A. The person or persons so selected are required to give assistance in respect of the following matters:

(1) To assist the amin while preparing the assessment papers.

(2) To assist in procuring and to attest the signatures to applications for leases.

(3) To receive and to distribute to the persons concerned the individual notices of amounts charged.

(4) To attend and to assist at enquiries into complaints.

(5) To give information to the Subdivisional Officer or to the Sectional Officer of any insufficiency in the supply of water or of any misuse of the water.

(6) To give information to the zilladar with respect to alterations in the occupancy of lands under a lease for a term of years.

(7) To assist the tahsildar in collecting the rates.

48. For such assistance the representative or representatives shall be entitled to the free irrigation of lands in his or in their own occupation which may lie within the lands covered by the lease, subject to a total limit of 3 per cent of the area assessed.

The Deputy Collector or other officer in charge of the Revenue Division may, for reasons recorded in writing, disallow in whole or part such free irrigation, and may recover the rates which would otherwise have been charged, if the assistance required by rule 47A has not been rendered to the best of the ability of the representative or representatives.

SCHEDULE OF RATES.

1. On a lease for a term of years for the irrigation of all crops on the land leased (supply of water given from 16th June to 31st March in each year)—

	Per mán. Rs. A. P.
For leases executed prior to 30th June 1902	1 8 0
For leases executed from 1st July 1902	1 12 0

2. For such lands included in a lease for a term of years as may be classified by the Canal Officer under rule 3 as only deriving material benefit in seasons of short rainfall ... ... Rs. 0-8-0

These rates fall due on the 1st February of each year.

1. On a lease for a term of years for the irrigation of all crops on the land leased (supply of water given from 16th June to 31st March in each year)—

	Per mán. Rs. A. P.
For leases executed prior to 30th June 1902	1 8 0
For leases executed from 1st July 1902	1 12 0

2. For such lands included in a lease for a term of years as may be classified by the Canal Officer under rule 3 as only deriving material benefit in seasons of short rainfall ... ... Rs. 0-8-0

These rates fall due on the 1st February of each year.

Provided that in all cases in which the preliminary application for the lease has been presented on any date subsequent to the 31st of March of the year during which the lease is to commence, an additional charge of one pice per *go ut* equivalent to 6 annas 3 pies per mán shall be made on all lands in the lease for the year subsequent to that from which the lease commences.

EXISTING.

APPENDIX III

APPLICATION FOR SUPPLY OF WATER PRIOR TO CONCLUSION OF {*a lease for a term of ____ years / a season lease for autumn (Sarad) rice.}

We, being principal cultivators of Mauza Pargana on our own behalf and on behalf of the other cultivators of the Mauza, hereby certify that we have presented an application for the grant of {*a lease for a term of ____ years / a season lease for autumn (Sarad) rice} to cover all the irrigable land in a block situated in Mauza the area of which is approximately Máns. The boundaries of the block are shown in the attached sketch map, and are as specified below.

Now in order that we may obtain a supply of water at once and before *the {*lease for a term of ____ years / season lease for autumn (Sarad) rice} can be concluded, we whose signatures or marks are annexed below severally and jointly bind ourselves to pay the water rate on the whole area within the limits of the block as specified which may be determined by the Canal Officer to be irrigable: Provided that those fields which, under the existing conditions of cultivation, do not, in this season, require a supply of water, shall be exempted though classed as irrigable. We agree that under any circumstances the area to be charged for under this application shall be no less than Máns. In the event of {*a lease for a term of ____ years / a season lease for autumn (sarad) rice} not being concluded through the default or the non-consent of any of the cultivators of irrigable lands within the block, a rate of Rs. 3 per Mán on the area determined as irrigable and as liable to be charged for in the present season will be charged to us and will be payable by us on or before the 1st of February next. Water to be supplied up to 30th November only.

In token of our obligation in this agreement, we annex our signatures or marks below.

Dated *189* .

Boundary—North

East

South

West

Signature of applicant.	Date.	Signature of applicant.	Date.

CERTIFIED that the total approximate area of the block as ascertained by local enquiry is acres, and signatures of persons cultivating about per cent. of the whole area have been taken on this, and these are to my knowledge genuine.

* *Note.*—One or other to be scored through as may be proper.

Date

Signature of Sectional Officer.

PROPOSED.

APPENDIX III.

APPLICATION FOR SUPPLY OF WATER PRIOR TO CONCLUSION OF {*a lease for a term of ____ years / a season lease for autumn (Sarad) rice.}

We, being cultivators of Mauza Pargana hereby certify that we have presented an application for the grant of {*a lease for a term of ____ years / a season lease for autumn (Sarad) rice} to cover all the irrigable land in a block situated in Mauza the area of which is approximately Máns. The boundaries of the block are shown in the attached sketch map, and are as specified below.

Now in order that we may obtain a supply of water at once and before the {*lease for a term of ____ years / season lease for autumn (Sarad) rice} can be concluded, we whose signatures or marks are annexed below severally bind ourselves to pay the water-rate on our holdings within the limits of the block as specified which may be determined by the Canal Officer to be irrigable: Provided that those fields which, under the existing conditions of cultivation, do not, in this season, require a supply of water, shall be exempted though classed as irrigable. We agree that under any circumstances the area to be charged for under this application shall be not less than Máns as specified by each of us below. In the event of {*a lease for a term of ____ years / a season lease for autumn (Sarad) rice} not being concluded through the default or the non-consent of any of the cultivators of irrigable lands within the block, a rate of Rs. 3 per Mán on the area determined as irrigable and as liable to be charged for in the present season will be charged to us and will be payable by us on or before the 1st of February next. Water to be supplied up to 30th November only.

In token of our obligation in this agreement, we annex our signatures or marks below.

Dated *189* .

Boundary—North

East

South

West

Area declared by applicant.		Signature of applicant.	Date.	Signature of applicant.	Date.
Máns.	Goont				

CERTIFIED that the total approximate area of the block as ascertained by local enquiry is acres, and that the signatures of the persons taken on this are to my belief genuine.

* *Note.*—One or other to be scored through as may be proper.

Date

Signature of Sectional Officer.

Signature of Representative of Cultivators.

EXISTING.

APPENDIX VIII.

PERMIT FOR SUPPLY OF WATER PENDING COMPLETION OF LEASE FOR A TERM OF YEARS OR OF SEASON LEASE FOR RICE IRRIGATION.

To

of Village Pargana

WHEREAS you have applied for a supply of water which is required at once and before the {*lease for a term of ___ years / season lease for rice irrigation} for which you have applied can be concluded and whereas you have agreed on condition of obtaining a supply of water that you whose names are recorded above will be severally and jointly responsible for the water rates which may be due on the full irrigable area of the block, the area of which is approximately Máns and the boundaries of which are shewn in the attached sketch map and are as specified below: Provided that those fields which under the conditions of cultivation of the present season do not in this season require a supply of water, shall be exempted though classed as irrigable. Further provided that as agreed by you, under any circumstances the area to be charged for under this lease shall not be less than Máns.

This is to inform you that water will now be supplied to the block from the Distributary Canal and the supply will be continued as required up to 30th November next. Your responsibility under the terms of your application will remain until the {*lease for a term of ___ years / season lease for rice irrigation} is concluded when it will cease. In the event of the {*lease for a term of ___ years / season lease for rice irrigation} not being concluded, through the default or non-consent of any of the cultivators of irrigable lands within the block, you will under the terms of your application be liable severally and jointly for a rate of Rs. 3 per Mán on the full irrigable area of the block subject to the provisos above, and on the 1st February next or on any subsequent date you may severally or jointly be called on by the Deputy Collector or other officer in charge of the Revenue Division to pay the full amount.

Boundary—North

South

East

West

* *Note.*—One or other to be scored through as may be proper.

Signature of Subdivisional Canal Officer.

PROPOSED.

APPENDIX VIII.

PERMIT FOR SUPPLY OF WATER PENDING COMPLETION OF LEASE FOR A TERM OF YEARS OR OF SEASON LEASE FOR RICE IRRIGATION.

of Village Pargana

WHEREAS you have applied for a supply of water which is required at once and before the {* lease for a term of years / season lease for rice irrigation} for which you have applied can be concluded and whereas you have agreed on condition of obtaining a supply of water that you whose names are recorded above will be severally responsible for the water rates which may be due on your holdings in the full irrigable area of the block, the area of which is approximately Máns and the boundaries of which are shewn in the attached sketch map and are as specified below: Provided that those fields which under the conditions of cultivation of the present season do not in this season require a supply of water, shall be exempted though classed as irrigable. Further provided that as agreed by you, under any circumstances the area to be charged for under this lease shall not be less than Máns.

This is to inform you that water will now be supplied to the block from the Distributary Canal and the supply will be continued as required up to 30th November next. Your responsibility under the terms of your application will remain until the {* lease for a term of years / season lease for rice irrigation} is concluded when it will cease. In the event of the {* lease for a term of years / season lease for rice irrigation} not being concluded, through the default or non-consent of any of the cultivators of irrigable lands within the block, you will under the terms of your application be liable severally for a rate of Rs. 3 per Mán on your holdings in the full irrigable area of the block subject to the provisos above, and on the 1st of February next or on any subsequent date you may severally be called on by the Deputy Collector or other officer in charge of the Revenue Division to pay the amount due on your respective holdings.

Boundary—North

South

East

West

* *Note.*—One or other to be scored through as may be proper.

Signature of Subdivisiona Canal Officer.

[Third Publication.]

The 6th June 1905.

No. 16.—Notification.—It is hereby notified for general information that the Lieutenant-Governor of Bengal proposes, under the provisions of sections VI and XI of Act V (B.C.) of 1864, to make the following addendum to the schedule of tolls in force on the Calcutta Canals and Tolly's Nala and published in Notification No. 144, dated the 23rd May 1893.

W. A. INGLIS,
Secy. to the Govt. of Bengal.

13.—During neap-tides, when there is not sufficient water in the Tolly's Nala near Russa for the navigation of boats laden with firewood, they will be allowed to proceed to or from the river Biddiadharee through the Circular Canal on payment of a rate of eight annas per 100 maunds of measured maundage for passage through that canal in addition to the rate ordinarily payable for entering or plying in Tolly's Nala.

For purposes of reckoning demurrage charges under item No. 11 of the schedule, two extra days will be allowed over and above those provided for vessels plying on the Tolly's Nala.

Boats plying under this concession will not be allowed either to load or to unload along the Circular Canal or river Hooghly. Infringement of this rule will render the boats liable to the ordinary tolls in force for the Circular Canal.

MARINE DEPARTMENT.

The 15th June 1905.

No. 65 Marine.—Intimation having been received of the outbreak of plague in Bassein, it is hereby notified for general information that that place is declared an infected port, and that the regulations for the prevention of the introduction of plague by sea issued by this Government will be enforced in the ports of Orissa and Chittagong against vessels arriving from that place.

W. A. INGLIS,
Secy. to the Govt. of Bengal.

The 17th June 1905.

No. 66 Marine.—Mr. H. S. Toxer, Acting Branch Pilot, is granted, under article 676A., Civil Service Regulations, three months' privilege leave, with effect from the afternoon of the 6th July 1905.

W. A INGLIS,
Secy. to the Govt. of Bengal.

The 20th June 1905.

No. 67 Marine.—It is hereby notified, for general information, that Bhavanagar is declared free from plague, and that the regulations for the prevention of the introduction of plague by sea, which were imposed in the ports of Orissa and Chittagong against vessels arriving from that port are hereby withdrawn.

W. A. INGLIS,
Secretary to the Govt. of Bengal.

PUBLIC WORKS DEPARTMENT

ESTABLISHMENT.

The 15th June 1905.

No. 137.—Babu Troylukho Nath Mazumdar, Supervisor, first grade, is transferred, in the interests of the public service, from the Gandak Division (Gandak Circle) to the Eastern Sone Division (Sone Circle).

The 17th June 1905.

No. 138.—Babu Monmotho Nath Chuckerbutty, Overseer, second grade, is transferred, in the interests of the public service, from the Nadia Rivers to the Cossye Division.

No 139.—Babu Phanindro Nath Mookerjee, Overseer, first grade, is transferred, in the interests of the public service, from the Cossye to the Nadia Rivers Division.

The 20th June 1905.

No. 141.—Babu Tarini Charan Sircar, Sub-Engineer, first grade (Honorary Assistant Engineer), Eastern Sone Division, is granted, under article 260 of the Civil Service Regulations, privilege leave for 20 days, with effect from the afternoon of the 9th June 1905.

No. 142.—Babu Khetter Mohan Paulit, Supervisor, second grade, is appointed Toll Collector of Hanskhali, Nadia Rivers Division, during the absence, on leave, of Babu Bidhu Bhusan Trivedy, or until further orders.

W. A. INGLIS,
Chief Engineer, Bengal.

SUBORDINATE CIVIL SERVICE.

No. 2931A.

No. 1592A.D.—The 14th June 1905.—The undermentioned substantive *pro tempore* Sub-Deputy Collectors of the Burdwan Division are posted to the stations mentioned against their names, viz.:—

Burdwan Divn.

Maulvi Atai Elahi	...	Serampore, Hooghly.
Babu Nihar Ranjan Banerji	...	Burdwan.
„ Amal Krishna Mukerji	...	Ghatal, Midnapore.
Maulvi Syed Ezhar Hasan	...	Contai, ditto.

No. 1654A.D.—The 17th June 1905.—Under the authority vested in him by section 357, sub-section (2), of the Code of Criminal Procedure, Act V of 1898, the Lieutenant-Governor empowers the substantive *pro tempore* Sub-Deputy Magistrates, named below, to take down evidence in criminal cases in the English language:—

24-Parganas.

Babu Nrisinha Ranjan Mukerjea	...	... 24-Parganas.
„ Chittaranjan Mukherjee	...	... Ditto.
„ Satis Chandra Gupta	...	... Basirhat, 24-Parganas.

No. 1656A.D.—The 17th June 1905.—Babu Promode Chandra Sen Gupta, substantive *pro tempore* Sub-Deputy Collector, is posted to the Ranchi district, and is vested with the powers of a Magistrate of the third class, on being relieved of his Settlement duties in Bihar.

Ranchi.

No. 1660A.D.—The 17th June 1905.—The substantive *pro tempore* Sub-Deputy Collectors of the Bhagalpur Division, named below, are posted to the head-quarters stations of the districts mentioned against their names:—

Bhagalpur Divn.

Babu Brajabandhu Bhaumik	...	... Bhagalpur.
Mr. O. G. Robinson	...	... Purnea.

No. 1662A.D.—The 17th June 1905.—The substantive *pro tempore* Sub-Deputy Collectors of the Presidency Division, named below, are posted to the head-quarters stations of the districts mentioned against their names:—

Presidency Divn.

Babu Nand Kishore Jain	...	Murshidabad.
„ Susil Kumar Ganguli	...	Nadia.
„ Rajani Kanto Mukhopadhayay	...	Khulna.
„ Sasi Bhusan Bhattacharjya	...	Jessore.
„ Sati Prasad Ganguli	...	24-Parganas.

No. 1703A.D.—The 17th June 1905.—The substantive *pro tempore* Sub-Deputy Collectors of the Orissa Division, named below, are posted to the head-quarters stations of the districts mentioned against their names:—

Orissa Divn.

Babu Radha Krishna Basu	...	... Cuttack.
„ Radha Charan Das	...	...
„ Anadi Ranjan Bose	...	... Balasore.
„ Mohini Mohan Senapati	...	...
„ Gopinath Das	...	... Puri.

No. 1711A.D.—The 19th June 1905.—The substantive *pro tempore* Sub-Deputy Collectors of the Patna Division, named below, are posted to the head-quarters stations of the districts noted against their names:—

Patna Divn.

Maulvi Syed Musi Kazim	...	... Saran.
„ Syed Mohamed Naziruddin	...	... Patna.
„ Mohammad Abdus Salam	...	... Shahabad.
Babu Abhay Charan De	...	... Muzaffarpur.
Maulvi Abul Mahamed Rashad	...	... Darbhanga.

No. 1729A.D.—The 19th June 1905.—Maulvi Amjad Ali, substantive *pro tempore* Sub-Deputy Collector, Dacca, is transferred to the head-quarters station of the Backergunge district.

Dacca. Backergunge.

No. 1731A.D.—The 19th June 1905.—Babu Jogesh Chandra Sen, substantive *pro tempore* Sub-Deputy Collector, Dacca Division, is posted to the head-quarters station of the Dacca district.

Dacca.

R. W. CARLYLE,

Offg. Chief Secy. to the Govt. of Bengal.

JAIL DEPARTMENT.

NOTIFICATION.

No. 6767, dated Calcutta, the 20th June 1905.—Captain E. E. Waters, I.M.S, made over charge of the Puri Jail, temporarily, to Assistant Surgeon Satis Chandra Basu on the afternoon of the 9th April 1905.

No. 6768, dated Calcutta, the 20th June 1905.—Assistant Surgeon Satis Chandra Basu made over charge of the Puri Jail to Captain E. E. Waters, I.M.S., on the forenoon of the 15th April 1905.

W. J. BUCHANAN,
Inspector-General of Prisons, Bengal.

CIVIL MEDICAL DEPARTMENT, BENGAL.

No. 1310D., dated Darjeeling, the 12th June 1905.—Senior Assistant Surgeon Jogendra Nath Ghosh, of the Bhagalpur Dispensary, is allowed privilege leave combined with furlough for one year and two months, viz, privilege leave for two months and nineteen days under article 260 of the Civil Service Regulations, and furlough for the remaining period under article 338 (*b*) of the same Regulations, with effect from the 26th May 1905.

No. 1333D., dated Darjeeling, the 13th June 1905.—Third-grade Assistant Surgeon Harendra Kumar Das did supernumerary duty at the Medical College Hospital, Calcutta, from the 22nd May to the 6th June 1905, both days inclusive.

No. 1336D., dated Darjeeling, the 13th June 1905.—First-grade Assistant Surgeon Syam Nirad Das Gupta of the Silliguri subdivision and Dispensary in the Darjeeling district is allowed privilege leave for six weeks under article 260 of the Civil Service Regulations, with effect from the date he is relieved of his duties.

No. 1339D., dated Darjeeling, the 13th June 1905.—Third-grade Assistant Surgeon Harendra Kumar Das is appointed to act at the Silliguri subdivision and Dispensary in the Darjeeling district during the absence, on leave, of first-grade Assistant Surgeon Syam Nirad Das Gupta or until further orders.

S. H BROWNE, M.D., COL., I.M.S.,
Inspector-General of Civil Hospitals, Bengal.

TREASURY NOTICE.

UNCOVENANTED DEPUTY COLLECTOR BABU PROSONNO KUMAR KARFARMA is placed in charge of the Champaran Treasury, and is authorised to draw bills on other Treasuries with effect from the forenoon of the 2nd June 1905.

C. R. MARRIOTT, *Addl. Commissioner.*

PATNA COMMR.'S OFFICE, BANKIPORE, *the 14th June 1905.*

HIGH COURT NOTICES.

NOTIFICATION.

THE following Circular Orders amending certain of the forms of Registers prescribed by the High Court of Judicature at Fort William in Bengal for maintenance in Civil and Criminal Courts subordinate to it, having been framed by the said High Court in the exercise of the powers vested in it by the Statute 24 and 25 Vic., Chapter 104, section 15 and by section 3 of Act III of 1879, confirmed by the Local Governments of Bengal and Assam and sanctioned by the Governor-General in Council, are published for general information.

HIGH COURT,
ENGLISH DEPARTMENT
(CIVIL AND CRIMINAL),
The 14th June 1905.

By order of the High Court,
A. P. MUDDIMAN,
Registrar.

CIVIL.

No. of 1904.

1. *Cancel* column 27 of "Forms Nos. (M) 40 (i) and 40 (ii)," at page 62, Volume II of the High Court's General Rules and Circular Orders, Civil.

2. *Cancel* the "NOTE" at the foot of "Forms Nos. (M) 41," "(M) 44," and "(M) 46" to "(M) 54," at pages 63, 66, and 68 to 76 *ibid.*

3. *Cancel* the entry "(iv)" under the "NOTE" at the foot of "Forms Nos. (M) 42" and "(M) 43," at pages 64 and 65; and "NOTE 1" at the foot of "Form No. (M) 45," at page 67 *ibid.*

4. *Cancel* "Form No. (M) 62," at page 85 *ibid*, and *substitute* therefor the following:—

FORM No. (M) 62.

Register of the attendance of Witnesses.

Serial No. of witnesses.	Name of witness.	Register number and class of case.	DATE OF ATTENDANCE. First day.	Second day.	Third day.	Fourth day.	Fifth day.	Sixth day.	Examined.	Not examined.	Initials of presiding officer.	REMARKS.
1	2	3	4	5	6	7	8	9	10	11	12	13

NOTE 1.—For instructions, see Rule 6A, at page 132, General Rules and Circular Orders, Volume I.

NOTE 2.—Columns 1 to 4 should be filled in daily for every witness reported to be in attendance for the first time and columns 5 to 9, as may be necessary, on account of the subsequent re-appearance of the same witness. If a witness has to re-appear after having been six times in attendance, a new series of entries in *red ink* must be made in columns 4 to 9 immediately under the previous entries. Columns 10 and 11 should be filled up after the witness's final discharge; and the initials of the presiding officer are required in column 12 to vouch for the correctness of the entries in the Register.

5. *Cancel* the figures, letters, and words "C. O. No. 6 of 20th February 1892," or the word "ditto," as the case may be, entered in the fourth column of the "*List of Forms for indenting purposes*" against Forms Nos. (M) 40 (i) to (M) 54, at pages 416 to 420 *ibid.*,

CRIMINAL.

No. of 1904.

Cancel "Form No. (M) 41," at page 57, Volume II, of the High Court's General Rules and Circular Orders, Criminal, and *substitute* therefor the following:—

FORM No. (M) 41.

Register of the attendance of Witnesses.

Serial No. of witnesses.	Name of witness.	Number of case in Register Nos. (M) 31, (M) 32, (M) 33 or (V) 34	DATE OF ATTENDANCE. First day.	Second day.	Third day.	Fourth day.	Fifth day.	Sixth day.	DISCHARGED. On the first day.	On the second day.	On the third day.	After the third day.	Examined.	Not examined	Initials of presiding officer	Amount paid as expenses.	Receipt of witness.	REMARKS.
1	2	3	4	5	6	7	8	9	10	11	12	13	14	15	16	17	18	19

NOTE 1.—For instructions, see Rule 71A, page 29, General Rules and Circular Orders, Volume I.

NOTE 2.—Columns 1 to 4 should be filled in daily for every witness reported to be in attendance for the first time and columns 5 to 9, as may be necessary, on account of the subsequent re-appearance of the same witness. If a witness has to re-appear after having been six times in attendance, a new series of entries in *red ink* must be made in columns 4 to 9 immediately under the previous entries. Columns 10 to 15 should be filled up after the witness's final discharge according to the entries made in columns 4 to 9; and the initials of the presiding officer are required in column 16 to vouch for the correctness of the entries in the Register. Any amount paid as expenses to witnesses should be entered in column 17, and, if the payment be made in Court, the witness's receipt should be taken at the time of payment in column 18.

NOTE 3.—Witnesses who, after having been discharged, are re-summoned for cross-examination under the provisions of section 257, Criminal Procedure Code, should be regarded as witnesses who have re-appeared, and should, in accordance with the instructions given in Note 2 above, be entered in columns 5 to 9. (*General Letter No. 1 of 11th March 1903.*)

NOTIFICATION.

THE following Circular Orders having been framed by the High Court of Judicature at Fort William in Bengal in the exercise of the powers vested in it by the Statute 24 and 25 Vic., Chapter 104, section 15, and sanctioned by the Governor-General in Council, are published for general information.

HIGH COURT,
ENGLISH DEPARTMENT,
CIVIL AND CRIMINAL,
The 14th June 1905.

By order of the High Court,
A. P. MUDDIMAN,
Registrar.

ISSUED BY AUTHORITY OF THE HIGH COURT OF JUDICATURE AT FORT WILLIAM IN BENGAL.

(CIVIL.)

No. of 1905.

At page 132 of Volume I of the High Court's General Rules and Circular Orders (Civil *insert* the following:

[1] Or, if early morning sittings are being held, 7 A.M.

[2] Or, if early morning sittings are being held, 7-30 A.M.

6A. Parties shall be required to file with the nazir, not later than 12 noon,[1] lists of the witnesses who are in attendance to give evidence on their behalf. Lists presented later than that hour will not be received by the nazir. The nazir, or naib nazir, will verify the fact of the attendance of the witnesses named in the lists, and will, not later than 12-30 P.M.,[2] send the lists, after initialling them, to the Bench Clerk of the Court concerned. The Bench Clerk will enter in the Register of the attendance of witnesses the names of the witnesses who are entered in the lists, and also of those who, though not so entered, are actually examined.

The omission of the name of a witness from the list sent to the Court by the nazir shall be no bar to such witness being examined, if presented for examination, but no costs shall be allowed to any witness on account of his expenses for the day's attendance, if he is neither entered in the lists, nor actually examined.

NOTE.—This rule in no way affects the obligation, on the part of witnesses, to attend punctually at the time for which they are summoned

(CRIMINAL.)

No. of 1905.

Insert the following at page 29 of Volume I of the High Court's General Rules and Circular Orders, Criminal:—

[1] Or, if early morning sittings are being held, 7-30 A.M.

[2] Or, if early morning sittings are being held, 7 A.M.

74A. The Police Officer attached to the Court, or some other responsible officer of the Court, specially appointed to the duty, shall be required to make over to the Bench Clerk, not later than 12-30 P.M.,[1] a list, verified, dated and initialled by him, of the witnesses who, up to 12 noon,[2] are in attendance for examination. The Bench Clerk will enter in the Register of attendance of witnesses the names of the witnesses entered in the list, and also of those who, though not so entered, are actually examined. The omission of the name of a witness from the list shall be no bar to such witness being examined, if presented for examination; but no costs shall be allowed to any witness on account of his expenses for the day's attendance, if he is neither entered in the list, nor actually examined.

NOTE.—This rule in no way affects the obligation, on the part of witnesses, to attend punctually at the time for which they are summoned.

Sheriff's Office, the 31st May 1905

NOTICE is hereby given that the Third Criminal Sessions of the year 1905 of the High Court of Judicature at Fort William in Bengal, for the Town of Calcutta and Factory of Fort William, and the places subordinate thereto, will be held at the Court-house, in the Town of Calcutta, on Monday, the third day of July next, at 11 o'clock in the forenoon, and thenceforward from day to day until the said Sessions be over. And it is hereby proclaimed that all persons who are to prosecute any of the prisoners to be brought up for trial at the said Sessions be present then and there to prosecute.

E. CABLE, *Sheriff.*

সাইফ আফিস, সন ১৯০৫ সাল তারিখ ৩১শে মে।

সকলকে সমাচার দেওয়া যাইতেছে যে খুবে বাঙ্গালার কোর্ট উইলিয়ম দুর্গের অধীন শহর কলিকাতার ও অন্যান্য স্থানের ফৌজদারী বিচার নিষ্পত্তি জন্য আগামী সন ১৯০৫ সালের ৩রা জুলাই সোমবার বেলা ১১ ঘটিকার সময় এবং যে পর্য্যন্ত সেশিয়ানের কার্য্য শেষ না হয় প্রতিদিন উক্ত সময়ে কলিকাতার হাইকোর্টের আপন আদালত ঘরে সন ১৯০৫ সালের তৃতীয় ক্রিমিনেল সেশিয়ান বসিবেক এবং এতদ্দ্বারা প্রচার করা যাইতেছে যে, যে সকল ব্যক্তি কোন করেদির বিরুদ্ধে ফৌজদারী মিছিল করিবেক তাহারা উক্ত স্থানে উক্ত সময়ে হাজির থাকিয়া মোকদ্দমা করে ইতি।

ই: কেবল, সরিফ।

EDUCATION DEPARTMENT, BENGAL.

Subordinate Educational Service.

The 11th June 1905.—Babu Satis Narayan Chaudhuri, B.A., Assistant Head Master, Murshidabad Nawab's High School (class V), is allowed leave of absence for one month, under article 271 of the Civil Service Regulations, with effect from the 8th June 1905, or any subsequent date on which he may avail himself of it.

Babu Durga Das Roy, an Assistant Master in the Murshidabad Nawab's High School (class VI), is appointed to act as Assistant Head Master of the same institution, during the absence, on leave, of Babu Satis Narayan Chaudhuri, or until further orders.

Babu Manindra Nath Chaudhuri, B.A., is appointed to act as an Assistant Master in the Murshidabad Nawab's High School and in class VI of the Subordinate Educational Service on a salary of Rs. 37-8 a month, during the deputation of Babu Durga Das Roy, or until further orders.

The 15th June 1905.—Babu Abinash Chandra Misra, Sub-Inspector of Schools, Hooghly (class VII), was granted by the District Board of Hooghly leave of absence for three weeks, under article 260 of the Civil Service Regulations, with effect from the 10th March 1905.

The 18th June 1905.—Babu Nilmadhab Chakravarti, Head Clerk, Office of Inspector of Schools, Bhagalpur Division (substantively *pro tempore* in Class III), is allowed leave of absence for one month under article 260 of the Civil Service Regulations, with effect from the 3rd July 1905 or any subsequent date on which he may avail himself of it.

V. H. JACKSON,
Assistant Director of Public Instruction, Bengal, in charge.

NOTIFICATION.

AN oral examination in English idiom and pronunciation, as notified in the Director of Public Instruction's Circular No. 162, dated the 9th December 1902, will be held in the office of the Inspector of Schools, Rajshahi Division, at Jalpaiguri, on Thursday, the 29th June 1905, at 11 o'clock A.M. Each candidate should send in his application so as to reach this office on or before the 26th June 1905, stating the following particulars:—

1. His name and his father's name.
2. The name of his village and district.
3. Particulars concerning any examinations passed by him.
4. Whether he appeared at any previous oral examination, and, if so, when.

Each candidate should bring his University certificates in original.

JALPAIGURI, *The 12th June 1905.*

W. BOOTH,
Offg. Inspr. of Schools, Rajshahi Divn.

NOTIFICATION.

THE Half-yearly Examination in the Art of Teaching for Teachers of vernacular subjects employed in Government and Aided schools in the Chittagong Division will be held at the Training School at Chittagong on the 30th August 1905 at 11 A.M. in accordance with the Director of Public Instruction's Circular No. 181, dated the 25th October 1904. The Half-yearly Examination for Teachers of English subjects will be held at the Chittagong Municipal High English School on the 31st idem.

As a practical test of their teaching ability the candidates will be required to give a lesson on Reading and explanation and another lesson on Euclid or Geography.

Teachers who intend to present themselves at the examination should send (at least a fortnight before the date fixed for the examination) a statement containing the following information, and should also bring with them their University or other certificates to the examination centre:—

1. Name (in full).
2. Name of father (in full).
3. Name of native village and district.
4. University or departmental examination passed.
5. Year of passing the same.
6. Designation and full address.

CHITTAGONG, *The 15th June 1905.*

ABDUL KARIM,
Inspector of Schools, Chittagong Division.

CIVIL ENGINEERING COLLEGE, SIBPUR.

AGRICULTURAL DEPARTMENT.

HIGHER AGRICULTURAL CLASS.

[Session 1905-1906.]

Rules for admission.

FOR admission to the Higher Agricultural Class, an applicant must have one of the following qualifications:—

(i) He must have passed the F.E. Examination of the Calcutta University, and be under 23 years of age, but no student will be allowed to join the Agricultural class after the expiration of five years from admission into the Engineering College.

(ii) He must have passed the B.A. Examination of the Calcutta University by the B. course, or possess other sufficient educational qualifications; be under 23 years of age, and, in addition, have received a nomination from the Bengal Government.

(iii) He must have had a general education qualifying him to follow the instruction in the Higher Agricultural Class, and must also receive a nomination from Government for admission as a special student. To be eligible for a nomination under this rule, a candidate must either have landed property of his own, or be recommended by some influential landholder who desires to train him to take part in the management of his estate, or he must otherwise satisfy Government that he intends to make practical use of his agricultural training. Students entering under this rule will be termed Special Agricultural students. They will not be subject to any maximum limit of age, but will not be entitled to the privileges conferred on passed students under rules 12 and 13, even though they should obtain fully-signed diplomas in due course after passing the necessary examinations.

Every candidate for admission to this Department must apply in writing to the Principal not later than the 14th July. The form of application for a nomination, which must be addressed to the Principal, is given in Appendix B. In the event of the form not being properly filled up and accompanied by the necessary certificates, no notice will be taken of the application.

The number to be nominated each year will depend on the accommodation available.

Every applicant, not already a student of the College, must undergo a medical examination by the College Surgeon before admission to this Department. If this officer's report is unsatisfactory, the applicant will not be admitted.

The session begins on the first Monday in November. All students are required to join the College on that day. Any student prevented by sickness from attending on the opening day must produce a certificate to that effect from a Civil or Assistant Surgeon, failing which he will be liable to a fine not exceeding Rs. 10. No student will be admitted or re-admitted to the College after the month of November, except by special orders of the Director of Public Instruction. This permission will only be given under exceptional circumstances.

COURSE OF INSTRUCTION.

The course of instruction in the Higher Agricultural Class will extend over two academic years.

SCHOLARSHIPS.

Senior scholarships awarded in the Engineer Department are tenable in the Agricultural Department.

One graduate scholarship of Rs. 30 a month, tenable for one year, will be awarded on the result of the examination held at the end of the first academic year.

APPOINTMENTS.

Two appointments annually are assigned to students holding a fully-signed diploma: one in the Provincial Executive Service and one in the Subordinate Executive Service. The right of selection for these appointments will rest with Government, and the students who gained the highest marks at the examination for diplomas will not necessarily be selected.

ENTRANCE AND TUITION FEES.

Each student in the Higher Agricultural Department will be required to pay an *admission fee* of Rs. 10.

F.E.'s who elect to join the Agricultural Department immediately after passing the F.E Examination are exempted from the payment of this fee, as their names are already borne on the College books.

For the present no tuition fees will be charged to students in the Agricultural Department, except in the case of those joining as special students under rule 3 (iii). The tuition fees for these students will be Rs. 8 a month.

Further particulars may be obtained free on application to the Principal.

SIBPUR,
The 7th June 1905.

A. MACDONELL,
Offg. Principal, Civil Engineering College.

NOTICE No. I.

OFFICE OF THE INSPECTOR OF SCHOOLS, CHOTA NAGPUR DIVISION.

Purulia, the 10th June 1905.

THE half-yearly Examination of teachers who teach through the medium of English, in the art of teaching, will be held in the Purulia Zilla School on the 7th August 1905. The candidates who appear at this examination must have passed the Entrance or some other higher examination. They are requested to bring their certificates with them for admission to the said examination.

2. The examination will be mainly practical and will consist of—

(*a*) Practical examination in class control.

(*b*) A practical test of teaching ability.

(*c*) An oral examination, in which the Inspector of Schools or any other examiner will put some questions on the art of teaching, object lessons, class management, organization and discipline.

Salmon's "Teacher's Handbook of Slojd" (George Phillip and Son).

3. The book noted in the margin is prescribed for the said examination.

BALDEV MISRA,

Assistant Inspector of Schools,

Chota Nagpur Division, in charge.

NOTICE No. II.

THE half-yearly examination of teachers of Vernacular subjects, who have at least passed the Middle Vernacular Standard Examination, will be held in the first grade Training School at Ranchi on the 30th August 1905. The candidates are requested to bring their certificates with them for admission to the said examination.

2. The examination will be mainly practical, and will consist of—

(*a*) Practical examination in class control.

(*b*) A practical test of teaching ability.

(*c*) An oral examination in which the Inspector of Schools or any other examiner will put some questions on the art of teaching, object lessons, class management, organisation and discipline.

BALDEV MISRA,

Assistant Inspector of Schools, in charge.

NOTICE.

COMMERCIAL CLASSES IN THE PRESIDENCY COLLEGE.

DAY classes in the following subjects will be opened in the College on the 27th June 1905:—

1. English (modern), especially English correspondence, including Commercial correspondence, letter-drafting and précis-writing.
2. Arithmetic, including Commercial and Mental Arithmetic.
3. Book-keeping, Short-hand and Type-writing.
4. Commercial History and Geography.
5. Bengali, especially Commercial correspondence, letter-writing, précis-writing and translation.

All will be admitted to the Day classes who have passed the School Final or the Entrance Examination or who are able to satisfy the Education Department by passing a simple preliminary test examination.

There is no age limit.

The fee for the Day classes is Rs. 3 a month.

P. K. RAY,

Offg. Principal, Presidency College.

PRESIDENCY COLLEGE, CALCUTTA, *the 8th March 1905.*

NOTICE.

EVENING classes in the following subjects will be opened in the College on the 27th June next:—

1. Banking and Currency.
2. Commercial and Industrial Law.
3. Book-keeping.
4. Short-hand.
5. Type-writing.

Candidates who have attended the lectures in the day course will be eligible for admission to the Evening course, but others will be admitted if they satisfy the Education Department by passing a simple preliminary test examination.

There is no age limit.

The fee is Rs. 3 for each series of fifteen lectures in the evening course on—

1. Banking and Currency; and
2. Commercial and Industrial Law;

and Rs. 10 for each course of lectures on—

1. Book-keeping.
2. Short-hand; and
3. Type-writing.

P. K. RAY,

Offg. Principal, Presy. College.

PRESY. COLLEGE, CALCUTTA, *the 15th May 1905.*

NOTIFICATION.

THE quarterly oral examination in the knowledge of English idiom and pronunciation, notified in the Director of Public Instruction's Circular No. 162, dated the 9th December 1902, will be held at the office of the Inspector of Schools, Dacca Division, on the 30th June. Candidates should send in their names so as to reach this office on or before the 25th instant. The examination is free, and is restricted to teachers.

Candidates will not be admitted to the examination unless they produce their University certificates.

DACCA,
The 10th June 1905.

H. A. BAMFORD,

Inspector of Schools, Dacca Division.

NOTIFICATIONS OF THE BOARD OF REVENUE.

No. 3593½B.

NOTICE is hereby given that the Seventh Sale of Opium, the Provision of 1902-1903, will be held at the Government Opium Sale-room, No. 2 Bankshall Street, on Tuesday the 4th July 1905, at 11 A.M., and will comprise 4,000 chests, viz.—

	Chests.
Opium manufactured at the Patna Factory, consisting of ...	2,000
Ditto at the Ghazipur Factory, consisting of ...	2,000
Total ...	4,000

2nd.—The general conditions of the sale now advertised will be the same as usual. They may be ascertained by reference to the notification issued on the 22nd November 1904 and published in the *Government* and *Exchange Gazettes*, or on personal application at the office of the Board of Revenue.

3rd.—The latest dates for deposit and clearance will be the 10th and 19th July 1905, respectively, that is to say, no Bank of Bengal Receipts, Government Promissory Notes or other Public Securities that may be tendered for deposit in redemption of Promissory Notes given by purchasers in the sale-room will be received after 3-30 P.M. of Monday, the 10th July 1905, and no Bank of Bengal Receipts in full payment of lots will be accepted after 3-30 P.M. of Wednesday, the 19th July 1905.

4th.—In addition to the quantity above advertised for sale, the following quantities, more or less, of the opium manufactured at the Patna and Ghazipur Factories will be brought to sale between the sale now advertised and December next on or about the dates

specified below The Board of Revenue, however, reserve to themselves the right of altering these dates, should circumstances render it expedient to do so:—

DATES.	Manufactured at the Patna Factory; about chests.	Manufactured at the Ghazipur Factory; about chests.	Total; about chests.
On or about Tuesday, 1st August 1905 ...	2,000	2,000	4,000.
On or about Tuesday, 5th September ,, ...	2,000	2,000	4,000
On or about Tuesday, 26th September ,, ...	2,000	2,000	4,000
On or about Wednesday, 1st November ,, ...	2,000	2,000	4,000
On or about Tuesday, 5th December ,, ...	2,000	2,000	4,000
Total ...	10,000	10,000	20,000

By order of the Board of Revenue, L. P.,

H. F. SAMMAN, *Offg. Secretary.*

BOARD OF REVENUE, L. P., CALCUTTA, *the 27th May 1905.*

ELECTION OF MUNICIPAL COMMISSIONERS

NOTIFICATION.

IT is hereby notified for general information that under section 27 of the Bengal Municipal Act, III of 1884, as modified up to the 1st November 1896, a bye-election will be held on Saturday, the 12th August 1905, in the Taltala Ward of the Noakhali Municipality, in the district of Noakhali, to elect a Commissioner for that Ward in the place of Babu Krishna Kumar Mozumdar, deceased.

W. MAUDE, *Offg. Commissioner.*

CHITTAGONG, *the 17th June 1905.*

NOTIFICATION.

IT is hereby notified for general information that at the two bye-elections held on the 3rd June 1905 in Wards Nos. II and VIII of the Basirhat Municipality, in the district of the 24-Parganas, Munshi Kanai Mondal and Din Mohammad Khan, who were removed from the Municipal Board under section 20 (1) (*c*) of the Municipal Act, have been re elected to be Commissioners respectively for those wards.

CHANDIDAS GHOSE, *Personal Asst.*, for *Offg. Commr., on tour.*

COMMR.'S OFFICE, PRESY. DIVN., CALCUTTA, *the 19th June 1905.*

NOTIFICATION.

IT is hereby notified for general information that the 31st August 1905 has been fixed for holding a bye-election for the election of a Commissioner for Ward No. I of the Bhadeswar Municipality in the place of Babu Ashoo Tosh Banerjee, resigned.

E. H. WALSH, *Offg. Commissioner.*

BURDWAN COMMR.'S OFFICE, CHINSURA, *the 13th June 1905.*

NOTIFICATION.

IT is hereby notified for general information that at the bye-election held on the 15th May 1905 in thana Egra, Babu Govind Prosad Maiti was elected as a member of the Contai Local Board, in the district of Midnapore, *vice* Babu Jogendra Narayan Das Mohapatra, removed.

E. H. WALSH, *Offg. Commissioner.*

BURDWAN COMMR.'S OFFICE, CHINSURA, *the 14th June 1905.*

NOTIFICATION.

IT is hereby notified for general information that, under rule 21 (*b*) of the Dispensary Manual, the following gentlemen have been appointed members of the Committee for the management of the Charitable Dispensary at Ranaghat in the district of Nadia:—

1. The Subdivisional Officer of Ranaghat (*ex-officio*).
2. The Civil Surgeon of Nadia (*ex-officio*).
3. Babu Nagendra Nath Pal Choudhuri.
4. ,, Sarat Chandra Pramanik.
5. ,, Mohendra Nath Ghose.
6. ,, Krishna Chandra Ghatak.
7. ,, Kali Kumar Mallik.
8. ,, Nagendra Nath Mukerjee.

CHANDIDAS GHOSE, *Personal Asst.*, for *Offg. Commr.*

COMMR.'S OFFICE, PRESY. DIVN., CALCUTTA, *the 19th June 1905.*

NOTIFICATION.

IT is hereby notified for general information that, under Rule 21 (*b*) of the Dispensary Manual, the following gentlemen have been appointed members of the Committee for the management of the Charitable Dispensary at Narail, in the district of Jessore:—

The Sub-Deputy Collector of Narail (*ex-officio*).
Babu Indu Bhushan Bose.
,, Kailash Chandra Ghose.

F. W. DUKE, *Offg. Commissioner.*

COMMR.'S OFFICE, PRESY. DIVN., *the 13th June 1905.*

NOTIFICATION.

IT is hereby notified for general information that, in exercise of the powers conferred on me by section 41 of the Bengal Local Self-Government Act, III of 1885, I appoint the following gentlemen to be members of the Union Committees of Senhati and Dumuria in the Sadar subdivision, of Kalaroa and Magura in the Satkhira subdivision and of Bagerhat and Mulghur in the Bagerhat subdivision of the district of Khulna.

Dumuria Union Committee.

1. Babu Devendra Nath Bhattacharjee.
2. ,, Sital Chandra Ghattak.
3. ,, Jogendra Nath Kundu.
4. Munshi Kismuttulla Joddar.
5. Babu Hira Lal Gupta.
6. ,, Bhaba Nath Mitra.
7. ,, Nibaran Chandra Ghosh.
8. Munshi Abdul Goldar.
9. Sub-Registrar of Dumuria, *ex-officio*

Senhati Union Committee.

1. Babu Sridhar Sen.
2. ,, Saroda Kanto Das.
3. ,, Sasi Bhusan Sen.
4. ,, Nepal Chandra Chatterji.
5. Babu Rajani Kanto Mazumdar.
6. ,, Surendra Kumar Mitra.
7. ,, Paresh Nath Das.
8. ,, Protap Chandra Banerjee.
9. The Civil Hospital Assistant Dowlatpur, *ex-officio.*

Kalaroa Union Committee.

1. Babu Kali Krishna Mukerjee.
2. ,, Raj Kumar Ghosh.
3. ,, Ram Gopal Banerjee.
4. Munshi Abbas Delal.
5. Babu Gopal Chandra Kundu.
6. ,, Surendra Nath Sen.
7. Munshi Dadirali Mridha.
8. Babu Dwarka Nath Haldar.
9. Babu Srish Chandra Bose.

Magura Union Committee.

1. Babu Purna Chandra Roy.
2. ,, Harish Chandra Mukerjee.
3. ,, Trailakhya Nath Mukerjee.
4. ,, Mohendra Nath Ghosh.
5. Babu Raj Kumar Bose.
6. ,, Rashamay Dutta.
7. ,, Gopal Chandra Bose.
8. ,, Lalit Mohan Chatterjee.
9. Moulvi Menatulla Khan.

Bagerhat Union Committee.

1. Babu Hem Chandra Roy Choudhury.
2. Kazi Safiuddin Ahmad.
3. Babu Basanta Kumar Chakravarti.
4. „ Saroda Prasanna Bose.
5. Babu Sasadhar Ghose.
6. „ Suk Lal Nag.
7. „ Beni Lal Dutta.
8. „ Kasi Nath Ghose.
9. Babu Sri Kanta Roy.

Mulghar Union Committee.

1. Babu Sarat Chandra Raha.
2. „ Keshab Lal Ghose.
3. „ Banka Behari Roy.
4. Munshi Muswoodul Huq.
5. Babu Annoda Charan Acharjye.
6. „ Kunja Behari Ghose.
7. „ Jadu Nath Bose
8. „ Trailukhya Nath Ghose.
9. Munshi Hasim Choudhury

CHANDI DAS GHOSE, *Personl. Asst*, for *Offg. Commissioner.*

COMMR.'S OFFICE, PRESY. DIVN., CALCUTTA, *the 20th June 1905.*

The Calcutta Gazette.

WEDNESDAY, JUNE 21, 1905.

PART IA.

Orders and Notifications by the Government of India, &c.

[*Reprinted from the "Gazette of India."*]

The following orders, issued by the Government of India in the Home Department, are republished for general information.

H. W. C. CARNDUFF,
Offg. Secy. to the Govt. of Bengal.

NOTIFICATION.

JUDICIAL.

Simla, the 2nd June 1905.

No. 786.—Erratum.—In the Home Department Notification No. 333, dated the 3rd March 1905, regarding the appointment of certain gentlemen to be notaries public,

for "Babu Gopal Chandra Shome"

read "Babu Gopal Chandra Som."

No. 788.—Mr. H. C. Eggar, late Solicitor to Government, was granted leave from the 12th December 1904 to the 28th February 1905, both days inclusive, under article 658 of the Civil Service Regulations.

M. HAMMICK,
Offg. Secy. to the Govt. of India.

The following order, issued by the Government of India in the Department of Commerce and Industry, is republished for general information.

H. W. C. CARNDUFF,
Offg. Secy. to the Govt. of Bengal.

EXPLOSIVES.

Simla, the 29th May 1905.

No. 1962G.—In accordance with the provisions of section 18, sub-section (1), of the Indian Explosives Act, 1884 (IV of 1884), and with the directions contained in the Notification of the Government of India in the Home Department, No. 1964, dated the 2nd September 1887, the Governor-General in Council is pleased to publish, for the information of persons likely to be affected thereby, the following amendments which it is proposed to make in the rules to regulate the transport and importation of explosives, published with the like Notification No. 5528, dated the 11th October 1901.

The draft will be taken into consideration on or after the 1st August 1905.

DRAFT AMENDMENTS.

I.—In rule 1, Class 6, *Ammunition class, after* the words "Division 1 comprises exclusively—safety cartridges, safety fuzes for blasting," *omit* the words—"Fuzes for shells and tubes friction for guns, provided there be no more than five fuzes or 25 tubes in one package, and that the package be a hermetically-sealed metal cylinder."

II.—For rule 2 *substitute* the following, namely:—

"2. The following general rules shall be observed with respect to the packing of explosives for conveyance:—

(1) Unless the context otherwise requires,—

the expression "outer package" means a box, barrel, case or cylinder, of wood, metal or other solid material, of such strength, construction and character that it will not be broken or accidentally opened, nor become defective or insecure whilst being conveyed, and will not allow any explosive to escape;

the expression "inner package" means a substantial case, bag, canister or other receptacle, made and closed so as to prevent any explosive from escaping;

the expression "authorized explosive" means exclusively an explosive included in a List of Authorized Explosives prepared by the Chief Inspector of Explosives with the Government of India, and published annually in the *Gazette of India* and in force for the time being;

the expression "propellant" means an authorized explosive of Class 3, adapted and intended exclusively for use as a propelling charge in cannon or small arms; and

the expression "special authority" means a written authority granted by the Chief Inspector of Explosives, to which may be attached such conditions as may, in the opinion of the Chief Inspector of Explosives, be necessary to meet the special requirements of the case.

(2) The interior of every package shall be free from grit and otherwise clean.

(3) Save as hereinafter provided, there shall not be any iron or steel in the construction of any package unless the same is covered with suitable material so as effectually to prevent the exposure of such iron or steel.

(4) Every package when actually used for the packing of one explosive shall not be used for the packing of any other explosive or any other article or substance:

Provided that this rule shall not prevent the packing of inner packages containing a propellant in an outer package with inner packages containing gunpowder or another propellant:

Provided also that this rule shall not prevent the packing of any article which is not of an inflammable or explosive nature, or liable to cause fire or explosion, in the same package as an explosive of the 1st Division of the 6th (Ammunition) Class.

(5) Subject to the foregoing provisions, the following shall be the method of packing authorized explosives of the various classes, respectively, and the maximum amounts which may be in any one package:—

Class.	Method of packing.	Amount in any one outer package.	Amount in any one inner package.
Class 1	When the quantity in any one consignment does not exceed 5lbs. in amount a single outer package; otherwise		
	A double package, the inner and outer packages being as above defined.	100 lbs.	100lbs.
		Provided that where gunpowder and propellant are packed together the amount shall not exceed—	
		50 lbs. ...	25 lbs.
Class 2	As for Class 1	50 lbs. ...	50 lbs.
Class 3, Division 1, other than propellants.	As for Class 1, provided that either the outer or inner package shall be thoroughly waterproof, and both shall be without metal in the construction thereof.	50 lbs. ...	5 lbs.
Class 3, Division 1, propellants.	As for Class 1	50 lbs. ...	50 lbs.
Class 3, Division 2, other than Picric Acid and wet guncotton.	As for Class 1	50 lbs. ...	50 lbs.
Picric Acid ...	As for Class 1	Unlimited ...	Unlimited.

Class.	Method of packing.	Amount in any one outer package.	Amount in any one inner package.
Guncotton so wetted with water as to be absolutely uninflammable.	As for Class 1, provided that the inner or outer package, or both of them, shall be of such a nature and so closed as to prevent any material loss of moisture during conveyance.	Unlimited ...	Unlimited.
Class 4	As for Class 1	50 lbs. ...	50 lbs.
Class 5	Packed in water. A treble package, the innermost package being a bag permeable to water, enclosed in a case containing sufficient water to ensure the explosive being kept constantly wet; and the outer package containing sufficient water constantly to surround the case. Both the case and the outer package shall be of such construction as will not allow water to escape. If the explosive is of such character that it cannot be packed in a thoroughly wet condition, it shall be packed in accordance with conditions set forth in a special authority.	200 lbs. ...	25 lbs.
Class 6, Division 1, other than Pin-fire cartridges for pistols.	A single outer package ... Provided that the above general rule (3) shall not apply to explosives of this Division. Provided also that bulleted cartridges of a calibre exceeding 0·5 inch and belonging to this Division shall be packed in such a manner that the point of any bullet cannot come in contact with the cap of another cartridge.	Unlimited.	
Pin-fire cartridges for pistols.	(*a*) Not exceeding 50 in number in any one consignment:—So packed in a single package that the bases lie alternately in opposite directions. The bases and pins shall be so fitted into perforations in millboard or other suitable material as to prevent the firing of any one of the said cartridges by an explosion in any other of the said cartridges.	50 in number.	
	(*b*) Exceeding 50 in number:—In an inner and outer package, the cartridges being packed in inner packages with millboard as above required.	2,500 in number.	50 in number.
Class 6, Division 2 ...	Explosives made up into cartridges or charges for cannon, shells, torpedoes, mines, blasting or other like purposes shall be packed in such manner and in such quantity as is required for the same explosive when not so made up; provided that, where a		

Class.	Method of packing.	Amount in any one outer package.	Amount in any one inner package.
	double package is required, the enclosing case of such cartridges or charges may, if it satisfies the conditions required for an inner package, be held to be such inner package.		
	Other ammunition of this Division :—A single outer package.	100 lbs.	
Class 6, Division 3, other than detonators and electric detonators.	As for class 1	50 lbs. ...	2 lbs. or 10 in number, whichever be the greater.
	Provided that bulleted cartridges of a calibre exceeding 0·5 inch and belonging to this Division shall be packed in such a manner that the point of any bullet cannot come in contact with the cap of another cartridge.		
Detonators ...	(*a*) Not exceeding 1,000 in any one consignment:—As for class 1, provided that the detonators and the spaces between the same and between the sides of the inner package and the said detonators shall all be filled, as far as practicable, with fine sawdust or other similar material; a layer of felt or other soft yielding material shall be placed between both ends of all the detonators and the interior of the inner package in which the same are placed in such manner, and so secured, that both ends of the detonators will rest upon the said cotton wool or other material; every inner package, if of metal, to be lined throughout with paper or other soft material; and	1,000 in number.	100 in number.
	(*b*) Exceeding 1,000 detonators :—		
	The detonators shall be packed in inner packages, with sawdust and cotton wool as above described. Such inner packages shall be placed inside a substantial case of wood or metal, made and closed so as to prevent any of the inner packages escaping therefrom, and such case shall be placed inside an outer package in such manner and so secured as to leave a clear space of not less than three inches between the case and every part of the interior of the said outer package, notwithstanding that such clear space may, if preferred, be filled with sawdust, straw or other similar material, or	10,000 in number.	100 in number.

Class.	Method of packing.	Amount in any one outer package.	Amount in any one inner package.
	may contain a light framework or battens of wood to keep the case aforesaid in position in the outer package; and (c) where the number of detonators exceeds 5,000, such outer package shall be provided with handles or other contrivance by means of which it can be safely and conveniently carried.		
Electric detonators ...	As for Class 1, provided that where the number in any outer package exceeds 3,000, such outer package shall be provided with handles or other contrivance by means of which it can be safely and conveniently carried.	5,000 in number.	100 in number.
Class 7, Division 1 ...	Double package, the inner package being hermetically closed and contained in an outer package as above defined.	20 lbs. ...	1 lb.
Class 7, Division 2 ...	Single outer package, provided that the above general rule (3) shall not apply to explosives of this Division.	100 lbs.	

(6) Nothing in this rule shall be deemed to prohibit the use of an additional package, whether inner or outer, provided that such additional package shall not be of such character as shall have been prohibited in writing by the Chief Inspector of Explosives.

(7) An explosive which is not an authorized explosive shall be packed in such manner as may be directed by a special authority with reference to such explosive.

(8) On the outermost package there shall be affixed in conspicuous characters, by means of a brand or securely attached label or other mark, the word "Explosive," the name of the explosive, the number of the class and division to which it belongs, and the name of the manufacturer or sender.

In the case of explosives of Classes 3 and 4, there shall be added the date of manufacture or issue from the factory, or such sign indicating such date as may be approved by the Chief Inspector of Explosives:

Provided that in the case of cartridges or charges for cannon, shells, mines, blasting or other like purpose, which do not contain their own means of ignition, the marking shall be as for the explosive when not so made up.

Provided also that in the case of explosives of Class 6, Division 1 (safety fuzes excepted), there shall be added the words "Not liable to explode in bulk."

Provided also that in the case of Pin-fire cartridges for pistols there shall be added the words "Pin-fire cartridges."

Provided also that in the case of safety fuzes or gunpowder the word "explosive" and the number of the class and division may be omitted.

Provided also that, where an outer package contains more than one explosive, the marking above required shall be affixed separately in respect of each explosive so contained.

(9) To meet special cases exemption may be granted by special authority from the observance of any one or more of the conditions imposed by this rule."

III.—For rule 8 *substitute* the following, namely:—

"8. An explosive shall not be imported by sea into British India, except under and in accordance with the conditions of a license to import the explosive granted under these rules:

Provided that any explosive other than an explosive specified in rule 11 may, previous to the grant of an importation license, if it is included in a list published under clause (*l*) of rule 2 and for the time being in force, and if it is certified to be of British manufacture or, if not of British manufacture, if it is imported from the United Kingdom and covered by the certificate granted by one of His Majesty's Inspectors of Explosives in England, be landed in accordance with such regulations as the Local Government may prescribe in this

behalf, and be stored in a place set apart by the Local Government for this purpose. The Governor-General in Council may extend this privilege to any such explosive not of British manufacture regarding which he is satisfied that it has been manufactured under adequate official supervision.

Before any explosive is landed under the proviso to this rule, the consignee shall give to the Chief Customs Officer of the Port such undertaking, with or without security, as the said officer thinks sufficient, to obey, in the event of the explosive failing to satisfy the prescribed tests, such directions as to its disposal as the Local Government may see fit to prescribe.

If samples are taken by an officer deputed by the Chief Customs Officer on board the ship on its arrival the procedure shall be that prescribed in rule 15."

IV.—For rule 14 *substitute* the following, namely:—

"14. No license shall be granted for the importation of any explosive of the description referred to in rule 13, unless it is an explosive authorized for manufacture in or importation into the United Kingdom for general sale and unless its importation is recommended by the Chief Inspector of Explosives with the Government of India, and if it is an explosive for which a test or examination has been prescribed by or under the orders of the Government of India unless samples of the explosive taken as hereinafter provided are certified by the Chemical Examiner or some other officer appointed by the Local Government in this behalf to have passed the test or examination from time to time prescribed."

Simla, the 29th May 1905.

No. 556.—With reference to the Commerce and Industry Department Notification No. 1962G., dated the 29th May 1905, publishing draft amendments which it is proposed to make in the rules to regulate the transport and importation of explosives, published with the like Notification No. 5528, dated the 11th October 1901, the following draft list of "Authorized explosives," referred to in draft rule 2 (1) of the above draft rules, is published for the information of persons likely to be affected thereby, and will be taken into consideration on or after the 1st August 1905.

C. A. MUSPRATT-WILLIAMS, *Major*, R.A.,
Chief Inspector of Explosives in India.

LIST OF AUTHORISED EXPLOSIVES.

The following explosives are at present authorised for importation into British India for general sale:—

CLASS 1—*Gunpowder.*

Gunpowder.

CLASS 2—*Nitrate Mixture.*

Ripplene.

CLASS 3—*Nitro-Compound.*

Every explosive in this class and every explosive ingredient thereof shall be so thoroughly purified and otherwise of such character as to satisfy a test known as the Heat Test, and specified in Schedule A of Home Department Notification No. 5529Public, dated the 11th October 1901:—

DIVISION 1.

Amberite No. 1.

Ballistite.
Blasting Gelatine.
Carbonite.
Cordite.
Cordite, M. D.
Dynamite.
Gelatine Dynamite No. 1.
Gelatine Dynamite No. 2, or Gelignite.

Provided that every explosive in this Division shall be of such character and consistency as not to be liable to liquefaction or exudation:—

DIVISION 2.

Amberite No. 2.

Cooppal's Powder.
E. C. Sporting Powder.
Empire Powder.
Gun-cotton.
Henrite.
Schultze Gunpowder.
Kynoch's Smokeless Sporting Powder.

DIVISION 2—*concld.*

Amberite No. 2—concld.

Negro Powder.
Picric Acid.
Picric Powder.
Rifleite.
Roburite.
S. R. Powder.
S S. Powder.
Smokeless Powder.
Smokeless Blasting Powder.

CLASS 4.—*Chlorate Mixture.*

Nil.

CLASS 5.—*Fulminate.*

Nil.

CLASS 6.—*Ammunition.*

DIVISION 1.

Safety Fuzes for Blasting.
Safety Electric Fuzes.
Percussion Caps.
Railway Fog Signals.
Safety Cartridges.

DIVISION 2.

Cartridges for Cannon, Shells, Mines, Blasting or other like purposes.
Cartridges for small arms which are not Safety Cartridges.
Electric Fuzes.
Fuzes for Blasting which are not Safety Fuzes.
Fuzes for Shells.
Tubes for firing Explosives.
War Rockets.

DIVISION 3.

Cartridges for small arms, which are not Safety Cartridges.
Detonators.
Electric Detonators.
Fuzes for blasting which are not Safety Fuzes.
Friction Tubes.
Fuzes for Shells.
Tubes for firing Explosives.

CLASS 7.—*Fireworks.*

DIVISION 1.

Nil.

DIVISION 2.

Manufactured fireworks.
Amorces.
Chinese Crackers.

The 31st May 1905.

No. 2151G.—The following draft rules which it is proposed to make in exercise of the powers conferred by section 17 of the Indian Explosives Act, 1884 (IV of 1884), are published (as required by section 18 of the said Act and by notification of the Government of India, Home Department, No. 1964, dated the 2nd September 1887) for the information of persons likely to be affected thereby; and notice is hereby given that the draft will be taken into consideration by the Governor-General in Council on or after the 1st day of August 1905.

2. Any objections or suggestions which may be received from any person with respect to the draft before that date will be considered by the Governor-General in Council:—

In exercise of the powers conferred by section 17 of the Indian Explosives Act, 1884 (IV of 1884), and in supersession of Government of India, Home Department, Notification No. 1606 Public, dated the 31st July 1897, the Governor-General in Council is pleased hereby to declare that,—

I.—Picric Acid when in process of manufacture shall (for whatever purpose used or manufactured) be deemed to be an explosive within the meaning of the said Act, subject to the following exception:—

(*a*) When the Picric Acid is mixed with not less than half its own weight of moisture in every process of manufacture, it shall be exempt from being deemed to be an explosive within the meaning of the said Act.

II.—Picric Acid when kept, conveyed, imported or sold shall (for whatever purpose used or manufactured) be deemed to be an explosive within the meaning of the said Act, subject to the following exceptions:—

(*a*) Picric Acid mixed with not less than half its own weight of water, shall be exempt from being deemed to be an explosive within the meaning of the said Act.

(*b*) Picric Acid which does not fall within the exemption (*a*), when the quantity does not exceed two thousand pounds in any one ship, boat, carriage, building or place, shall be exempt from being deemed to be an explosive within the meaning of the said Act; provided that such Picric Acid is so kept and conveyed as not to be liable, whether under the action of fire or otherwise, to come in contact with any substance specified in the schedule hereto, or with any fire or light capable of igniting such Picric Acid.

Provided also that such Picric Acid when dry is so packed in a substantial barrel or case that the contents cannot escape; and that no metal other than aluminium, or an alloy containing not less than ninety per centum of aluminium, is used in the construction of any package containing such Picric Acid, and that each barrel or case is legibly marked "Picric Acid."

Picric Acid when not subject to the above exemptions must be packed and marked as laid down in the rules* relating to the packing of explosives prescribed by the Government of India.

* General Rules for Transport and Importation of Explosives.

III.—Picrates and mixture of Picric Acid with any other substance (for whatever purpose used or manufactured) shall be deemed to be explosives within the meaning of the said Act, subject to the following exception:—

(*a*) A picrate mixed with not less than half its own weight of water shall be exempt from being deemed to be an explosive within the meaning of the said Act.

Schedule.

Any of the following metals or metallic oxides, namely, lead, oxide of lead, oxide of iron, potash, baryta, lime, soda, oxide of zinc, oxide of copper; and any compound of such metal or oxide (other than a metallic sulphate); or any chlorate, nitrate, or other oxidizing agent; or any other substance declared by a notification of the Government of India to be capable of forming with Picric Acid a dangerous compound.

Provided that this schedule shall not be deemed to include any metal or oxide unavoidably formed on any metal used in the construction of any ship, boat or carriage, or contained in any paint, where the packages containing Picric Acid are protected from direct contact with such metal or paint.

NOTIFICATION.

EXPLOSIVES.

Simla, the 13th June 1905.

No. 2729G.—In accordance with the provisions of section 18, sub-section (*1*), of the Indian Explosives Act, 1884 (IV of 1884), and in pursuance of the directions contained in the Notification of the Government of India in the Home Department No. 1964, dated the 2nd September 1887, the Governor-General in Council is pleased to publish, for the information of persons likely to be affected thereby, the following amendments which it is proposed to make in the rules to regulate the transport and importation of explosives published with the Notification in the Home Department No. 5528, dated the 11th October 1901.

The draft will be taken into consideration on or after the 1st September 1905:—

(1) In rule 10, after the word "Negapatam" the words "and Moulmein" shall be inserted; and after the word "Akyab" the word "Moulmein" shall be omitted.

(2) In rule 11, the word "or" before the word "Negapatam" shall be omitted, and after the word "Negapatam" the words "or Moulmein" shall be inserted.

W. L. HARVEY,
Secy. to the Govt. of India.

The following order, issued by the Government of India in the Military Department, is republished for general information.

H. W. C. CARNDUFF,
Offg. Secy. to the Govt. of Bengal.

Simla, the 9th June 1905.

CANTONMENTS.

No. 495.—In exercise of the powers conferred by section 25 of the Cantonments Act, 1889 (XIII of 1889), the Governor-General in Council is pleased to extend to the Cantonment of Lebong the provisions of sections 100 and 287—307 of the Bengal Municipal Act, 1884 (Ben. Act III of 1884), subject to the restrictions and modifications set forth below:—

1. Whoever refuses or fails to furnish any return of the rent or annual value of his holding when required to do so by the Cantonment Committee, for a space of one week from the day on which he shall have been required to do so, or knowingly makes a false or incorrect return, shall be liable to a fine not exceeding twenty rupees, and to a further daily fine not exceeding five rupees for each day during which he shall omit to furnish a true and correct return, and whoever hinders, obstructs or prevents any member of the Cantonment Committee, or any person authorised by the Cantonment Committee in writing in that behalf, from entering or inspecting or measuring any such holding, shall be liable to a fine not exceeding two hundred rupees.

[Bengal Act III of 1884, section 100.]

Penalty for default in furnishing return.

2. The Cantonment Committee shall provide a supply of water within the limits of the Cantonment, and for this purpose it shall be lawful for them to cause such mains and pipes to be laid, and such tanks, reservoirs or other works to be made and constructed as shall be necessary for the supply of water in the chief public streets; and they may also erect in all such streets sufficient and convenient standpipes or pumps for the use of the inhabitants of the Municipality for domestic purposes.

[Section 287.]

The Cantonment Committee to provide water-supply.

3. A supply of water for domestic purposes shall not include a supply of water for animals or for washing carriages, where such animals are kept for sale or hire, or a supply for any trade, manufacture or business, or for watering gardens or roads, or for any ornamental or mechanical purpose.

[Section 288.]

What are domestic purposes.

4. The Cantonment Committee at a meeting shall determine what pressure of water shall be maintained in their service pipes and mains, and during what hours such pressure shall be continued, and shall publicly notify the same.

[Section 289.]

Pressure at which water must be kept.

5. Whenever the Cantonment Committee deem it practicable and consistent with the maintenance of an efficient water-supply, they may at a meeting, and subject to such rules and conditions as the Local Government may make and impose, allow the owners and occupiers paying the water-rate to lay down communication pipes from the service pipes of the Cantonment Committee for the purpose of leading water to their premises for domestic purposes.

[Section 290.]

Communication pipes.

6. The communication pipes and all fittings thereon leading water from the service pipes of the Cantonment Committee into any house or land and the pipes, works and fittings inside the house or land, must in all cases be executed subject to the inspection and satisfaction of the Committee. Such communication pipes and fittings may be made by the servants and workmen of the Committee upon such terms as may be agreed upon between the Committee and the person requiring the supply, or subject to such charges as may be fixed by the Committee; and the Committee may require the amount necessary for the execution of such works to be paid or deposited before such works are executed.

And such charges and expenses shall be recoverable in the same manner as the water-rate.

[Section 291.]

Communication pipes, etc., must be made to satisfaction of officers of the Cantonment Committee.

7. Any officer authorized in that behalf by the Cantonment Committee may, between the hours of seven in the forenoon and five in the afternoon, enter into or on any house or land supplied with water as aforesaid in order to examine all pipes, works and fittings connected with the supply of water, and to ascertain whether there be any waste or misuse of such water.

And, if such officer at any such time be refused admittance into such house or land for the purposes aforesaid, or be prevented from making such examination, the Committee may forthwith cut off the supply of water from such house or land:

Provided that nothing hereinbefore contained shall authorize an entry into any room appropriated for the zanana or residence of women which by the custom of the country is considered private, unless a notice in writing of not less than four hours be given.

[Section 292.]

Power to enter premises.

8. In the event of any pipes, works or fittings connected with the supply of water in any house or land being at any time found, on examination by any officer of the Committee authorized in that behalf, to be out of repair to such an extent as to cause waste of water, the Committee may cause the water to be turned off from such house or land, after giving notice in writing of not less than twenty-four hours and may recover from the occupier of such house or land the expense incurred for turning off the water.

[Section 293.]

When pipes are out of order Cantonment Committee may turn off water.

[Section 294.] 9. The Cantonment Committee may supply water for purposes other than domestic purposes, and may, subject to such charges and rates as may have been fixed by the Committee at a meeting, lay down, or allow to be laid down, the necessary pipes and works of such dimensions and character as may be approved by them.

Supply for business.

[Section 295.] 10. The Cantonment Committee at a meeting may determine what quantity of water shall be supplied to the occupier of every house free of further charge for every rupee paid to the Committee as water-rate on account of such house.

House-holder entitled to certain supply of water for domestic use.

If the Cantonment Committee have reason to believe that the occupier of any house consumes more water than he is entitled to as aforesaid, it shall be lawful for them to provide a water-meter at their own expense, and to attach the same to the water-pipes of the said house: and any water which may be used over and above the quantity to which the occupier is entitled as aforesaid shall be paid for by him at such rate as the Cantonment Committee at a meeting may determine.

[Section 296.] 11. It shall be at the option of the Cantonment Committee to provide filtered or unfiltered water for all latrines and water-closets, and it shall be lawful for them to require that all latrines and water-closets supplied with water, filtered or unfiltered, shall be provided with a cistern of such size and description as the Committee shall direct, and all such cisterns shall be put up at the cost of the owner of the house or land so supplied with water.

Cantonment Committee may provide filtered or unfiltered water for latrines.

[Section 297.] 12. If any person supplied with water shall neglect to pay the water-rate at the times of payment thereof, or the charge made for the said water when supplied for other than domestic purposes, the Cantonment Committee may turn off the water from the house or land in respect of which such rate or charge is payable, and may recover the expense of turning off the water from such person:

Water may be cut off on neglect to pay the rate.

Provided that the stopping or cutting off the supply of water shall not relieve any person from any penalties or liabilities which he may have incurred.

[Section 298.] 13. The occupier of any house or land in which water supplied by the Cantonment Committee is, from negligence or other circumstances under the control of the said occupier, wasted, or in whose house or land the pipes, works or fittings for the supply of water shall be found to be out of repair to such an extent as to cause waste of water, shall be liable to a fine not exceeding twenty rupees.

Occupier in whose house water is wasted liable to penalty.

[Section 299.] 14. Any person otherwise causing waste of water supplied by the Cantonment Committee shall be liable to a fine not exceeding five rupees.

Persons causing waste of water liable to penalty.

[Section 300.] 15. It shall be within the discretion of the Cantonment Committee to allow any person not residing within the limits of the Cantonment to take or be supplied with water for domestic use, on such terms as the Committee in meeting may from time to time prescribe.

Cantonment Committee at their discretion may allow person outside the Cantonment to take water.

And any person taking, or causing to be taken, for use, outside the limits of the Cantonment, water supplied by the Committee, without the permission of the Committee, shall be liable to a fine not exceeding fifty rupees.

Penalty.

[Section 301.] 16. Before a connection for the supply of water from the service-pipes of the Cantonment Committee to any house or land is sanctioned, the Committee may cause all the works, pipes and fittings within the said house or land to be inspected by an officer appointed by them in that behalf.

Before connection, an officer of the Cantonment Committee to cause all works and pipes to be inspected.

And the cost of such inspection shall be payable in advance by the person applying for such connection at such rates as the Committee shall from time to time direct.

And, until such officer shall have certified to the Committee that the works, pipes and fittings have been executed and put up in a satisfactory manner, a connection with the service-pipes of the Committee shall not be permitted.

[Section 302.] 17. The connection with the service-pipes of the Cantonment Committee, as also the laying of supply-pipes under any public road or thoroughfare, shall be executed by an officer of the Committee authorised in that behalf and by no other person.

Connection with service-pipes to be executed only by an officer of the Cantonment Committee.

And the expense of making such connection shall be payable in advance by the person applying for the same, at such rates as the Committee shall from time to time direct.

[Section 303.] 18. Any person who shall unlawfully flush, draw off, divert or take water from any water-works belonging to, or under the control of, the Cantonment Committee, or from any water or streams by which such water-works are supplied, shall be liable to a fine not exceeding one hundred rupees.

Obstructing or diverting water.

[Section 304.] 19. No works for introducing a supply of water to any house shall be commenced by the owner without sending a specification and estimate of the cost thereof to the occupier, nor by the occupier without sending such specification and estimate to the owner.

Estimate and specification of works to be sent.

20. Except in the case of a special agreement to the contrary, the owner of any house or land shall bear the expense of keeping all works connected with the supply of water to such house or land in substantial repair: [Section 305.]

Owner to keep works in repair.

Provided that nothing in this rule shall affect the liabilities of parties under leases executed previous to the extension of these rules to the Cantonment.

21. All public tanks, reservoirs, cisterns, wells, aqueducts, conduits, tunnels, pipes, pumps, and other water-works, whether made, laid or erected at the cost of the Cantonment Committee or otherwise, and all bridges, buildings, engines, works, materials and things connected therewith, or appertaining thereto, and also any adjacent land (not being private property) appertaining to any public tank shall become vested in His Majesty, and be under the control of the Cantonment Committee. [Section 306.]

Tanks, etc., vested in His Majesty.

22. The water-rate and all moneys collected, received, or recovered for or in respect of the supply of water or the execution of works, and all fines connected therewith, or in any respect relating to the water-supply, shall be applied by the Cantonment Committee in defraying the expense of making, extending or maintaining the water-works, in the payment of such a proportionate share of the cost of collection and of general supervision as the Cantonment Committee in meeting may from time to time direct and in the liquidation of debts incurred for some purpose connected with the supply of water. [Section 307.]

Application of rates and moneys received from the supply of water.

Simla, the 16th June 1905.

VOLUNTEER CORPS.

APPOINTMENTS, PROMOTIONS AND RESIGNATIONS.

1st Battalion, Calcutta Volunteer Rifles.

No. 525.—James Henry Bernard, Esq., I.C.S., to be second-in-command with the rank of Major, with effect from the 1st April 1905.

H. B. B. WATKIS, *Colonel,*
Offg. Secy. to the Govt. of India.

The Calcutta Gazette.

WEDNESDAY, JUNE 21, 1905.

PART IB.

ORDERS BY THE LIEUT.-GOVERNOR OF BENGAL.

MUNICIPAL AND LOCAL.

NOTIFICATIONS.

No. 1096T.M.—The 18th June 1905.—It is hereby notified that, under section 19 of the Bengal Local Self-Government Act, III of 1885, the Lieutenant-Governor is pleased to appoint Munshi Sahadatulla Talukdar to be a member of the Thakurgaon Local Board, in the district of Dinajpur, *vice* Babu Jogendra Narayan Ray Choudhury, resigned.

Dinajpur.

No. 1102T.M.—The 14th June 1905.—It is hereby notified that, under section 19 of the Bengal Local Self-Government Act, III of 1885, Mr. E. F. Ainslie has been elected by the members of the Alipur Local Board, in the district of Jalpaiguri, to be a member of the Jalpaiguri District Board, *vice* Mr. A. W. Stark, resigned.

Jalpaiguri.

No. 1104T.M.—The 14th June 1905.—It is hereby notified that, under section 19 of the Bengal Local Self-Government Act, III of 1885, the Lieutenant-Governor is pleased to appoint Dr. S. Ducat to be a member of the District Board of Jalpaiguri, *vice* Mr. J. Wedderspoon.

Jalpaiguri.

No. 1106T.M.—The 14th June 1905.—It is hereby notified that, under section 19 of the Bengal Local Self-Government Act, III of 1885, the Lieutenant-Governor is pleased to appoint Mr. J. Thompson to be a member of the District Board of Jalpaiguri, *vice* Mr. C. L. Clifford.

Jalpaiguri.

No. 1119T.M.—The 15th June 1905.—Whereas a Notification No. 1070M., dated the 28th February 1905, was published at page 41, Part IB of the *Calcutta Gazette* of 1st March 1905, declaring the intention of the Lieutenant Governor to revise the boundaries of the Balasore Municipality so as to include within its limits the following area, and whereas no objection was raised to the proposal within six weeks from the date of publication of the above notification within the Municipality, it is hereby notified for general information that, in exercise of the power vested in the Local Government by section 9A (2) of the Bengal Municipal Act, III of 1884, and in accordance with the recommendation of the Commissioners of the Balasore Municipality, made at a meeting, the Lieutenant-Governor sanctions the above proposal.

Balasore.

The area to be added is bounded—

On the north—By an imaginary line drawn along the bank of the Nuniajuri river running from the southern end of the Nuniajuri bridge in the east as far as the village Begunia in the west.

On the west—By an imaginary line drawn parallel at a distance of 1,200 feet (running from the north to the south between the boundary line of the two villages, Arar Bazar and Begunia, from the Nuniajuri river in the north, where the western end of the aforesaid northern boundary line ends, to the junction of the Diversion Grand Trunk Road and Mitrapur road on the south) to the west of the portion of Old Grand Trunk Road, from Mitrapur road on the south up to the southern end of the Nuniajuri bridge on the north, and from the junction of Grand Trunk Road and Mitrapur road, with a bend to the east along the southern side of the Mitrapur road, up to the northern end of the eastern fencing of Railway station compound, and from thence along the eastern fencing of the Bengal-Nagpur Railway station compound towards the south as far as the point where it meets with the short round road.

On the south—By the portion of short round road from the point towards the west where the aforesaid western boundary (Bengal-Nagpur Railway fencing) meets as far as the junction of short round and Grand Trunk Roads towards the east.

On the east—By the portion of Grand Trunk Road from the junction of short round and Grand Trunk Roads towards the south up to the southern end of the Nuniajuri bridge towards the north. (This Grand Trunk Road should be understood as was before the introduction of Railway here at Balasore.)

The revised boundaries of the Municipality after the inclusion of the above area will be as follow:—

On the north—By the Nuniajuri river as far as the village Begunia towards the west, and from the junction of the Nuniajuri and Burabalang rivers towards the east up to the eastern boundary of the Old Balasore towards the east along the bank of the said Burabalang river.

On the west—By an imaginary line drawn parallel at a distance of 1,200 feet (running from north to south between the boundary line of the two villages, Arar Bazar and Begunia, from the Nuniajuri river in the north, where the western end of the aforesaid northern boundary line ends, to the junction of the Diversion Grand Trunk Road and Mitrapur road on the south) to the west of a portion of Old Grand Trunk Road, from Mitrapur road on the south up to the southern end of the Nuniajuri bridge on the north, and from the junction of Grand Trunk Road and Mitrapur road, with a bend to the east along the southern side of the Mitrapur road up to the northern end of the eastern fencing of Bengal-Nagpur Railway station compound, and from thence along the eastern fencing of Bengal-Nagpur Railway station compound towards the south as far as the point where it meets with the short round road, and by a portion of short round road from the southern end of the eastern fencing of Bengal-Nagpur Railway station compound as far as the junction of short round road and Grand Trunk Road, and thence along the eastern side of Grand Trunk Road towards the south up to the point where it meets the southern boundary line of the mauza Poruapada.

On the south—By a zigzag line running from west to east from Grand Trunk Road on the west to the Chandipur road on the east, drawn along the southern boundary of the mauzas Poruapada, Karanjia, Gobendraipur, Makalpur, Mansing Bazar, Akhrasal, southern side of Dighipokhar and Sunhat mauza.

On the east—By a line drawn along the eastern boundary of the mauza Purna Balasore from the point towards the north where it meets the eastern end of the aforesaid northern boundary at the bank of Burabalang river as far as the north-western corner of Ambhira tank, and from that corner towards the south along the western side of the said tank up to its south-western corner, and from thence by an imaginary straight line towards the south-western direction joining the Chandipur road, where the eastern end of the aforesaid southern boundary line meets and touching the south-eastern corner of the Alhua tank in the way.

No. 1137T.M.—The 16th June 1905.—It is hereby notified that, under section 27 of the Bengal Municipal Act, III of 1884, the Lieutenant-Governor is pleased to appoint Babu Dina Nath Das to be a Commissioner of thh Faridpur Municipality, in the district of Faridpur, *vice* Mr. H. Mullick, resigned.

Faridpur.

No. 1139T.M.—The 16th June 1905.—It is hereby notified that, under section 27 of the Bengal Municipal Act, III of 1884, the Lieutenant-Governor is pleased to appoint Mr. C. Still, C.I.E., to be a Commissioner of the Bettiah Municipality, in the district of Champaran, *vice* Mr. J. R. Lowis, resigned.

Champaran.

No. 1145T.M.—The 17th June 1905.—It is hereby notified that under section 19 of the Bengal Local Self-Government Act, III of 1885, Babu Nagendra Chandra Sen has been elected by the members of the Kendrapara Local Board, in the district of Cuttack, to be a member of the Cuttack District Board, *vice* Mr. J. S. Davidson, resigned.

Cuttack.

No. 1146T.M.—The 17th June 1905.—It is hereby notified that the members of the Kendrapara Local Board, in the district of Cuttack, having at a meeting, under section 25 of the Bengal Local Self-Government Act, III of 1885, requested the Lieutenant-Governor to appoint a Chairman, the Lieutenant-Governor is pleased, under sections 25 and 29 of the Act, to appoint Babu Nagendra Chandra Sen to be the Chairman of that Local Board, *vice* Mr. J. S. Davidson, resigned.

Cuttack.

No. 1176T.M.—The 17th June 1905.—In exercise of the power conferred by section 17, sub-section (*1*), of the Cantonments Act, 1889 (XIII of 1889), and with the previous sanction of the Governor-General in Council, the Lieutenant-Governor is pleased to impose a water-rate at two and three-quarters *per cent.* on the annual value of holdings situated within the Lebong Cantonment:

Darjeeling.

Provided as follows:—

(*1*) Such water-rate shall not be levied upon—

(*a*) any house or land, no part of which is within a radius of one thousand feet from the nearest stand-pipe or other supply of water available to the public; or

(*b*) any land used exclusively for purposes of agriculture; or

(*c*) any holding consisting only of tanks.

(*2*) Nothing in clause (*1*) shall prevent the Cantonment Committee from making any special arrangement consistent with any enactment or rules for the time being in force in the Cantonment with persons residing beyond the radius prescribed in sub-clause (*a*) of that clause.

No. 1177T.M.—The 17th June 1905.—In exercise of the power conferred by section 17, sub-section (*2*) of the Cantonments Act, 1889 (XIII of 1889), and with the previous sanction of the Governor-General in Council, the Lieutenant-Governor is pleased to apply for the assessment and recovery of the water-rate imposed in the Cantonment of Lebong by Notification No. 1176T.—M., of this date, the provisions of sections 44, 96, 97, 99, 101, 103—105, 107—109, 112—130, 279, 281—286 and 312 of the Bengal Municipal Act, 1884 (Bengal Act III of 1884), in the adapted form set forth below:—

Darjeeling.

PART I.—ASSESSMENT.

The Cantonment Committee to determine the valuation of holdings.

1. The Cantonment Committee, after making such inquiries as may be necessary, shall determine the valuation of all holdings within the Cantonment as hereinafter provided. [*Ben. Act III of 1884, section 96.*]

Duration of assessment.

2. Save as herein otherwise provided, such valuation shall be valid for five years from the date on which it first takes effect in the Cantonment, and until the beginning of the year next after the date on which a new valuation may be made, or until the valuation be revised and amended. [*Ibid, section 97.*]

Returns for ascertaining annual value.

3. The Cantonment Committee, in order to prepare the valuation list, may, whenever they think fit, by notice, require the owners or occupiers of all holdings to furnish them with returns of the rent or annual value thereof, and the Cantonment Committee, or any person authorized by them in writing in that behalf, at any time between sunrise and sunset, may enter, inspect and measure any such holding after having given forty-eight hours' previous notice of their intention to the occupier thereof: [*Ibid, section 99.*]

Provided that if an assessor is appointed, such assessor shall not be competent to authorize any other person to enter, inspect, and measure any such holding.

[*Ibid, section 101.*]

4. The gross annual rental at which any holding may be reasonably expected to let shall be deemed to be the annual value thereof, and such value shall be accordingly determined by the Cantonment Committee and entered in the valuation list:

Annual value of holding how to be ascertained.

Provided that, if there be on a holding any building or buildings the actual cost of erection of which can be ascertained or estimated, the annual value of such holding shall in no case be deemed to exceed an amount which would be equal to seven and-a-half per cent. on such cost, in addition to a reasonable ground-rent for the land comprised in the holding:

Provided also that, in estimating the annual value of a holding, the value of any machinery that may be on such holding shall not be taken into consideration.

[*Ibid, section 103.*]

5. The Cantonment Committee shall cause to be prepared a valuation and rating list, which shall contain the following particulars, and any others which the Cantonment Committee may think proper to include:—

Preparation of valuation and rating list.

(*a*) name of street or road in which the holding is situated;
(*b*) number of the holding on the register;
(*c*) description of the holding;
(*d*) annual value of the holding;
(*e*) name of owner;
(*f*) amount payable for the year;
(*g*) amount of quarterly instalment;
(*h*) if the holding is exempted from assessment, a note to that effect.

[*Ben. Act III of 1884, section 104.*]

6. If any house belongs to one owner and the land on which it stands and any adjacent land which is usually occupied therewith belongs to another, the Cantonment Committee may value such house and land together, and may impose thereon one consolidated rate.

Power to assess upon house consolidated rate for house and land on which it stands.

The total amount of the rates shall be payable by the owner of the house, who shall thereafter be entitled to deduct from the rent which he pays for the land one-fourth of the water-rate so paid.

[*Ibid, section 107.*]

7. If the value of any holding shall be diminished from any cause beyond the control of the owner thereof, the owner thereof may apply for reduction of the valuation of the same.

Application for reduction of assessment.

[*Ibid, section 108.*]

8. The Cantonment Committee may, at any time after the publication of the notice required by rule 10, value and rate any holding which was without authority omitted from the valuation and rating list, or which has become liable to valuation and rating after the publication thereof; and may enhance the valuation and rating of any holding which may appear to have been insufficiently valued or rated through mistake, oversight or fraud; and may re-value and re-assess the water-rate on any holding the value of which has been increased by additions or alterations to any building thereon.

Power to revise valuation and assessment.

Any water-rate imposed, or enhancement made, under this rule shall take effect from the beginning of the quarter next following that on which the rate shall be imposed or enhancement made.

[*Ibid, section 109.*]

9. The Cantonment Committee may, at any time, substitute for any name mentioned in the valuation and rating list the name of any person to whom any holding mentioned therein shall have been transferred.

Power to revise assessment list.

Such person shall be liable to pay the water-rate payable on such holding from the first day of the quarter next after the date of the transfer.

[*Ibid, section 112.*]

10. When the valuation and rating list of the water-rate on the annual value of holdings shall have been prepared or revised, the President shall sign the same, and shall cause it to be deposited in the office of the Cantonment Committee, and shall cause the notice in Form A of the First Schedule annexed to these rules to be published as far as possible in the manner prescribed by section 354 of the Bengal Municipal Act, 1884.

Publication of notice of assessment.

[*Ibid, section 113.*]

11. Any person who is dissatisfied with the amount assessed upon him, or with the valuation or rating of any building, or his liability to be assessed or rated, may apply to the Cantonment Committee to review the amount of valuation or rating, or to exempt him from the rate.

Application for review.

[*Ibid, section 114.*]

12. Every application presented under the last preceding rule shall be heard and determined by not less than three members of the Cantonment Committee who shall be appointed in that behalf by the Committee at a meeting. The members so appointed, after taking such evidence and making such enquiries as they may deem necessary, may pass such orders as they shall think fit in respect of such application.

Procedure upon review.

The decision of such members, or of a majority thereof, in such cases shall be final.

[*Ibid, section 115.*]

13. Unless good cause shall be shown to the satisfaction of such Cantonment Committee for extending the time allowed, no such application shall be received after the expiration of one month from the date of publication of the notice required by rule 10

Limitation of time for application of review.

relating to the list containing the valuation or rating in respect of which application is made, or after the expiration of fifteen days from the date of service of the first notice of demand for payment at the rate in respect of which the application is made, whichever period shall last expire.

Assessment to be questioned only under these rules.

14. No objection shall be taken to any rating in any other manner than is provided for in these rules. [Ben. Act III of 1884, section 116.]

PART II.—RECOVERY.

Office hours for payment of the water-rate.

15. By notification to be posted up in their office the Cantonment Committee shall declare at what hours of each day (not being a Sunday or other recognized holiday), the office shall be open for the receipt of money and the transaction of business. [Ibid, section 117.]

Water-rate payable in advance.

16. The amount due by any person on account of the water-rate shall be deemed to be the amount entered in the lists, the notice relating to which is published under rule 10, unless the amount entered in such lists is subsequently altered by the Cantonment Committee as provided in these rules, in which case the amount to which the rating is so altered shall be deemed to be the amount due. Every instalment of such rate shall be deemed to be due on the first day of the quarter in respect of which such instalment is payable. [Ibid, section 118.]

Payment of water-rate.

17. The water-rate shall be paid by the occupiers of the holdings by quarterly instalments in advance. [Ibid, section 279, sub-section (3).]

Receipts to be given.

18. For all sums paid on account of the water-rate a receipt stating the amount and the rates on account of which it is paid shall be given, signed by the tax-collector or by some other officer authorized by the Cantonment Committee to grant such receipts. [Ibid, section 119.]

Bill and notice of demand to be presented.

19. At any time within six months after any sum has become due on account of the water-rate, the Cantonment Committee shall cause to be presented to the person liable to the payment thereof a bill for the said sum which shall contain a statement of the period for which the water-rate is in arrear. If the amount mentioned in such bill be not paid on presentation thereof a notice of demand, in the form marked A in the Second Schedule, with copy of the bill appended thereto, shall be served on the person liable to pay the same, and such notice of demand may be served at any subsequent time: [Ibid, section 120.]

Provided that no charge shall be made in respect of the service of such notice.

Such notice shall be signed by the President or an officer authorized on that behalf, and shall be served by the person authorized to receive payment.

Water-rate due from non-resident owner may be recovered from occupier.

20. If the sum due from the owner of any holding remains unpaid after the notice of demand has been duly served, and such owner be not resident within the Cantonment, or the place of abode of such owner be not known, the same may be recovered from the occupier for the time being of such holding. [Ibid, section 105.]

Occupier paying water-rate may deduct one-fourth from rent due to owner.

21. Whenever the person by whom the water-rate shall have been paid, or from whom the said rate shall have been recovered is not the owner of the house or land in respect of which the water-rate shall have been assessed, such person may recover from the owner one-fourth of the water-rate so paid or recovered, and may deduct the same from the rent payable by him to such owner. [Ibid, section 281.]

When house is unoccupied, owner to pay one-fourth of water-rate.

22. Whenever any house or land has been unoccupied during an entire quarter the owner of the said house or land shall pay to the Cantonment Committee one-fourth of the sum which would have been payable as water-rate by the occupier if such house or land had been occupied. [Ibid, section 282.]

The sum payable by the owner under this section shall be deemed to be due on the first day of the quarter following that in respect of which the said sum is payable.

Refund of water-rate when house ceases to be occupied.

23. Whenever any quarterly instalment of the water-rate shall have been paid in respect of any house or land and such house or land shall, during the quarter for which such instalment shall have been paid, cease to be occupied, the person who shall have paid such water-rate shall be entitled to be repaid by the Cantonment Committee three-fourths of such sum as shall bear to the amount paid by him the same proportion which the residue of the quarter bears to the entire quarter : [Ben. Act III of 1884, section 283.]

Provided that notice shall have been given in writing to the Cantonment Committee of such house or land being unoccupied, and that the application for refund be made within six months next after the date on which the house or land ceased to be occupied.

The date on which the said notice is delivered at the office of the Cantonment Committee shall for the purpose of this rule be deemed to be the date on which the house or land ceased to be occupied.

[*Ibid, section 284.*]

Rate payable on house being re-occupied.

24. Whenever any house or land which shall have been unoccupied shall begin to be occupied during any quarter, there shall be forthwith payable by the occupier in respect of such house a sum calculated at one-fourth of the rate that would have been payable if the house or land had been occupied during the entire quarter for the period during which the house or land was not occupied, and the full rate for the residue of the quarter.

And such occupier shall be entitled to deduct from the rent, or otherwise recover from the owner, one-fourth of the water-rate that would have been payable if the house or land had been occupied during the entire quarter.

[*Ibid, section 285.*]

Person subletting to several different tenants to be deemed occupier.

25. Whenever any person holding any house or land from the owner thereof has sub-let the same in severalty to two or more persons, the person holding from the owner shall, for the purposes of these rules, be deemed to be the occupier of such house or land.

[*Ibid, sections 286 and 312.*]

Power to assess owners in certain cases.

26. If any holding shall be occupied by more than one tenant holding severally, or shall be of less value than one hundred rupees, it shall be lawful for the Cantonment Committee to recover the rate from the owner of such holding, who shall have for the recovery of such rate from the tenant the remedies provided by sections 313 and 314 of the Bengal Municipal Act, 1884:

Provided that the owner shall not be entitled to recover from any occupying tenant more than three-fourths of the water-rate that would but for this proviso be recoverable by him under the said sections.

[*Ibid, section 181.*]

If not paid in fifteen days, process of distress may issue.

27. If any person after service upon him of the bill and notice referred to in rule 19 shall not, within fifteen days of the service of such notice or from the date of any order made on an application for review under rule 11, pay the sum due either to the Cantonment Committee at their office or to some person authorized by them to receive the money, or show to the Cantonment Committee sufficient cause for not paying the same, the amount of the arrear due, with costs on the scale shown in the table of fees marked B in the Second Schedule, may, at any time within three months after the date of service of the said notice, or of the order made on an application for review as aforesaid, be levied by distress and sale of any moveable property belonging to the defaulter, except ploughs, plough-cattle, tools or implements of agriculture or trade, wherever found, or of any moveable property belonging to another person, subject to the same exceptions which may be found within the holding in respect of which such defaulter is liable to such rate:

Provided that when the holding in respect of which the default is committed is a place of business, and the moveable property distrained is shown to the satisfaction of the Cantonment Committee to have been left there for repairs or safe custody in the ordinary course of business it shall be released:

Provided also that if the said property or any part thereof belong to any person othey than the defaulter, the defaulter shall be liable to indemnify the owner thereof for any damage he may sustain by reason of such distress, or by reason of any payment he mar make to avoid such distress or any sale under the same.

[*Ben Act III of 1884, section 182.*]

Distress how to be made.

28. Every warrant of distress and sale under the last preceding section shall be issued by the Cantonment Committee, and shall be in the Form marked C in the Second Schedule.

Distress shall be made by actual seizure of moveable property, and the officer charged with the execution of the warrant shall be responsible for the due custody thereof.

Such officer shall make an inventory of all moveable property seized under the warrant, and shall give not less than ten days' previous notice of the sale, and of the time and place thereof, by beat of drum, in the cantonment and by serving on the defaulter a notice in the Form marked D in the Second Schedule:

Provided that, if the property is of a perishable nature, it may be sold at once with the consent of the defaulter, or without such consent at any time after the expiry of six hours from the seizure.

[*Ibid, section 183.*]

Officer may break open door.

29. The officer charged with the execution of the warrant may, under the special orders of the Cantonment Committee, between sunrise and sunset, break open any outer or inner door or window of a house, in order to make the distress, if he has reasonable ground for believing that such house contains any moveable property belonging to the defaulter, and if, after notification of his authority and purpose and demand of admittance duly made, he cannot otherwise obtain admittance:

Provided that he shall not enter or break open the door of any room appropriated for the zenana or residence of women, which by usage of the country is considered private, except after three hours' notice and opportunity given for the retirement of the women.

[*Ibid, section 184.*]

Sale how to be conducted.

30. If the sum due be not paid with costs before the time fixed for the sale or the warrant be not discharged or suspended by the Cantonment Committee, the moveable property seized shall be sold by auction at the time and place specified, in the most public manner possible, and the proceeds shall be applied in discharge of the arrears and costs.

The surplus sale-proceeds (if any) shall be credited to the Cantonment Fund, and may be paid on demand to any person who establishes his right to the satisfaction of the Cantonment Committee or in a Court of competent jurisdiction.

The tax-collector, or other officer authorized in that behalf, shall make a return of all such sales to the Cantonment Committee in the Form marked E in the Second Schedule.

Certain persons prohibited from purchasing at sales.

31. All officers and servants of the Cantonment Committee, and all chaukidars, constables and other officers of police are prohibited from purchasing any property at any such sale. [*Ibid, section 195.*]

Cantonment Committee to keep account of distress and sales.

32. The Cantonment Committee shall cause a regular account to be kept of all distresses levied and sales made for the recovery of the water-rate under these rules. [*Ibid, section 196.*]

Sale of property beyond limits of Cantonment.

33. If no sufficient moveable property belonging to a defaulter, or being upon the premises in respect of which he is rated, can be found within the Cantonment, the Deputy Commissioner of Darjeeling, or any other Magistrate having jurisdiction over the cantonment may, on the application of the Cantonment Committee, issue his warrant to any officer of his Court for the distress and sale of any moveable property or effects belonging to the defaulter within any other part of the jurisdiction of the Magistrate, or for the distress and sale of any moveable property belonging to the defaulter within the jurisdiction of any other Magistrate exercising jurisdiction within the territories administered by the Lieutenant-Governor of Bengal, and such other Magistrate shall endorse the warrant so issued and cause it to be executed, and the amount, if levied, to be remitted to the Magistrate issuing the warrant, who shall remit the same to the Cantonment Committee. [*Ibid, section 197.*]

Distress or sale not unlawful for want of form.

34. No distress or sale made under these rules shall be deemed unlawful, nor shall any party making the same be deemed a trespasser on account of any error, defect, or want of form in the bill, notice, summons, warrant of distress, inventory or other proceedings relating thereto. [*Ben. Act III of 1884, section 198.*]

Cantonment Committee may bring suit instead of distraining or on failure of distress.

35. Instead of proceeding by distress and sale, or in case of failure to realize thereby the whole or any part of the water-rate, the Cantonment Committee may sue the person liable to pay the same in any Court of competent jurisdiction. [*Ibid, section 199.*]

Irrecoverable amounts.

36. The Cantonment Committee may order to be struck off the books any amount in respect of water-rate which may appear to them to be irrecoverable. [*Ibid, section 120.*]

Powers of President.

37. The President of the Cantonment Committee shall, for the transaction of business under these rules, exercise all powers vested in the Cantonment Committee, but not any power directed to be exercised by the Cantonment Committee at a meeting. [*Ibid, section 44.*]

E. A. GAIT,
Offg. Secy. to the Govt of Bengal.

THE FIRST SCHEDULE.

FORM A.

Cantonment of Lebong.

WHEREAS a valuation and rating list of the water-rate on the annual value of holdings has been deposited in the office of the Cantonment Committee as required by rule 18 of the rules for the assessment and recovery of the rate:

Notice is hereby given that the said list is open to the inspection of all persons desiring to inspect the same at the office of the said Cantonment Committee during office hours on any day not being a close holiday; and that the several owners of the holdings included therein are hereby required to pay the quarterly instalments set opposite to their names with regularity at the office appointed by the Cantonment Committee for the receipt of the same, or to the tax-collector or other officer authorized to receive payment, the first payment to be made on the first day of ( ) and every subsequent payment on or before the first day of ( ), the first day of ( ), and the first day of ( ), and in default thereof any arrear that may be due will be realized by distress and sale of the moveable property belonging to the defaulter, or which may be found on the holding in respect of which the valuation is made, and by such other proceedings as are allowed by law.

Dated this day of

A. B.,
President of the Cantonment Committee.

THE SECOND SCHEDULE.

FORM A.

Notice of Demand.

To

CANTONMENT OF LEBONG.

TAKE notice that the sum of Rs. , being the amount due from you, as shown in the accompanying bill, is hereby demanded from you, and that if you do not, within fifteen days, pay the same to an officer authorized to receive payment, or into the office of the Cantonment Committee, the amount together with costs will be levied by distress and sale of your goods and chattels, or otherwise as provided by law.

A. B.,
President of the Cantonment Committee

[*The following note will be added at the foot of the above notice in those cases only in which the notice is to be addressed to a person who has not already paid one instalment of the tax at the rate at which the demand is made.*]

NOTE.—If you have any objection to make against this demand, you may, instead of paying the amount which is hereby demanded, present a petition to the Cantonment Committee praying for a review of the amount assessed (or rated). Such petition must be presented within fifteen days of the service of this notice, otherwise it will not be received. If you present such petition, no amount will be levied from you until the Cantonment Committee shall have passed an order on your petition; but after fifteen days from such order the amount due by you, with such costs as the Committee may direct, will be levied unless it has been previously paid.

FORM B.

Table of Fees payable upon Distraints.

Sums distrained for.	Fees. Rs.	A.
Under 1 rupee	0	4
1 and under 5 rupees	0	8
5 „ 10 „	1	0
10 „ 15 „	1	8
15 „ 20 „	2	0
20 „ 25 „	2	8
25 „ 30 „	3	0
30 „ 35 „	3	8
35 „ 40 „	4	0
40 „ 45 „	4	8
45 „ 50 „	5	0
50 „ 60 „	6	0
60 „ 80 „	7	8
80 „ 100 „	9	0
Above 100 rupees	10	0

The above charge includes all expenses, including the service of notice of demand, except when peons are kept in charge of property distrained, in which case three annas must be paid daily for each man. If the amount demanded be paid or the warrant discharged before the sale is held so that no sale is necessary, one-fourth of the fees specified in the above table shall be remitted.

FORM C.

Distress Warrant.

To (here insert the name of the officer charged with the execution of the warrant).

WHEREAS of has not paid or shown sufficient cause for the non-payment of the sum of rupees due for water-rate for the period mentioned in the margin, although the said sum has been duly demanded in writing from the said , and fifteen days have elapsed since the service of the notice of demand: This is to require you to distrain the moveable property of the said wherever it may be found within the cantonment, except ploughs, plough-cattle, tools or implements of trade or agriculture, or any other moveable property, subject to the same exceptions, which may be found within the holding specified in the margin to the amount of

the said sum of and the further sum of to defray the charges of taking, keeping, and selling such property; and, if within ten days next after such distress, the said sum of shall not be paid to sell the said property, and having paid and deducted out of the proceeds of the sale the said sum of and charges of taking, keeping and selling such property, to return the surplus (if any) on demand to the person whom you shall have found in possession of the said property, and if no demand be made, to pay the same to the Cantonment Committee. If distress cannot be made of sufficient property of the said , you are to certify the same to us in returning this warrant.

A. B.,
President of the Cantonment Committee.

FORM D.

Form of Inventory and Notice.

(State particulars of goods seized.)

TAKE notice that I have this day seized the property specified in the above inventory for the sum of due for the taxes mentioned in the margin, and that unless you pay to me or into the office of the Cantonment Committee of the said sum of and the further costs of this distraint as specified below, within ten days from the day of the date of this notice, the property will be sold.

(*Signature of the officer executing the warrant of distress.*)

Costs of distraint—

Date

FORM E.

Register of Distraints of Property and Sales held on account of Arrears for the month of in

1. Name of defaulter.
2. Number on register and specification of the holding on account of which the arrear is due.
3. Amount of arrear due.
4. Amount of costs and penalty.
5. Total amount to be realized.
6. Inventory of property seized under distress.
7. Date of distress.
8. Date of sale.
9. Detail of articles sold.
10. Amount realized on each article.
11. Purchaser's name.
12. Total amount realized.
13. Amount paid into the Cantonment Committee's office on account of arrear due, with date.
14. Amount paid into the Cantonment Committee's office on account of costs and penalties.
15. Surplus proceeds of sale remaining after deducting the amount of arrears, costs, penalties due.
16. How the surplus was disposed of, with date of such disposal.
17. Balance of arrear still remaining unrealized, if any.
18. On what date such remaining balance was realized or written off by authority.
19. Remarks (explaining why the property seized was released without sale, if not eventually sold, etc., etc.).

E. A. GAIT,
Offg. Secy. to the Govt. of Bengal.

Notification of the Corporation of Calcutta.

THE following return, dated the 16th June 1905, of the appointment of a Commissioner by the Calcutta Trades Association, under section 8 of Act III (B.C.) of 1899, is hereby published in pursuance of section 8 (2) of the said Act:—

Mr. James Peter Wyness, Editor of the *Indian and Eastern Engineer*, 14 Clive Street, elected, *vice* Mr. C. T. Wibley, resigned.

MUNICIPAL OFFICE,
The 19th June 1905.

C. F. PAYNE,
Actg. Chairman of the Corporation of Calcutta.

The Calcutta Gazette.

WEDNESDAY, JUNE 21, 1905.

PART II.

Advertisements.

[N. B.—Advertisements, Notices, &c., intended for insertion in this part of the Gazette cannot be received after Noon on Monday.]

LAND SALE NOTICES.

Notification A.

NOTICE is hereby given, under sections 6 and 13, Act XI of 1859, that the undermentioned estates and shares of estates in the district of Puri will be put up for sale at the office of the Collector of that district on the 10th July 1905 at 12 noon for arrears of revenue and other demands which by law are realizable arrears of land revenue.

When in columns 5, 7 and 9 of the appended statement it is stated that only a share is to be sold, it is to be understood that a separate account is kept for that share, and that the other share or shares in the estate not specifically mentioned in column 6 are excluded from the sale.

Tauzi No.	Name of mahal and pargana.	Sadar jama of whole estate.	Whether the whole estate is to be sold.	If only a share is to be sold, specification of such share or shares.	Names of proprietors of property to be sold.	If only a share is to be sold, the sadar jama of such share.	If the whole estate is to be sold, the arrears due from it.	If only a share is to be sold, the arrears due from it.
1	2	3	4	5	6	7	8	9
		Rs. A. P.				Rs. A. P.	Rs. A. P.	Rs. A. P.
166 2	Taluk Ganeswarpur, pargana Ranchas.	1,619 0 0	... ...	Kismat 7a.	Chandamoni Debya, mother and guardian of Hanuman Khuntia (minor).	709 5 0	... .	79 5 0 Due for kist April 1906.
198	Killa Kokal, pargana Chabiskud.	1,706 0 0	Whole ...	.....	Balaram Das Bhagat and others.	.....	854 0	Ditto.
236 7	Taluk Lakshmiprasad, pargana Kurlow.	1,039 0 0	.....	Kismat 8a. 7p. 2k. 15b.	Jagannath Sahu and others ...	356 15 0	.....	5 5 0 Due for kist April 1906.

Puri Collectorate, the 30th May 1905.

J. E. BLACKWOOD, Collector.

Notification A.

NOTICE is hereby given, under sections 6 and 13, Act XI of 1859, that the undermentioned estates and shares of estates in the district of Tippera will be put up for sale at the office of the Collector of that district on the 27th June 1905 at 12 o'clock for arrears of revenue and other demands which by law are realizable as arrears of land revenue.

When in columns 5, 7 and 9 of the appended statement it is stated that only a share is to be sold, it is to be understood that a separate account is kept for that share.

Tauzi No.	Name of mahal and pargana.	Sadar jama of whole estate.	Whether the whole estate is to be sold.	If only a share is to be sold, specification of such share or shares.	Names of proprietors of property to be sold	If only a share is to be sold, the sadar jama of such share.	If the whole estate is to be sold, the arrears due from it.	If only a share is to be sold, the arrears due from it.
1	2	3	4	5	6	7	8	9
		Rs. A. P.					Rs. A. P.	
1933/3	Pargana Bardakhat Balmakandi Joar.	2,555 13 3	Whole ...	.....	Dwaraka Nath Barman and others.	.....	638 15 3	.....
1933/60	Pargana Bardakhat Joar Shingula.	1,360 3 1	Do. ...	....	Purna Chandra Chakraberty and others.	.....	373 11 1	.....
1933/61	Pargana Bardakhat Tinchitta Joar.	940 3 9	Do. ...	. .	Tarini Charan Bordhon and others.	.....	198 14 3	.....

Comilla, the 15th May 1905. H. W. SCHOOPE, Collector.

Notification A.

NOTICE is hereby given, under sections 6 and 13, Act XI of 1859, that the undermentioned estates and shares of estates in the district of Mymensingh will be put up for sale at the office of the Collector of that district on the 23rd June 1905 at 12 o'clock noon for arrears, of revenue and other demands, which by law are realizable as arrears of land revenue.

When in columns 5, 7 and 9 of the appended statement it is stated that only a share is to be sold, it is to be understood that a separate account is kept for that share.

Tauzi No.	Name of mahal and pargana.	Sadar jama of whole estate.	Whether the whole estate is to be sold.	If only a share is to be sold, specification of such share or shares.	Names of proprietors of property to be sold.	If only a share is to be sold, the sadar jama of such share.	If the whole estate is to be sold, the arrears due from it.	If only a share is to be sold, the arrears due from it.
1	2	3	4	5	6	7	8	9
		Rs.		*Second-class estates.*			Rs. A. P.	
6178	Joyarchatal, pargana Baradakhat.	588	Whole ...	.....	Kali Sundari Dassya and others.	.....	9 9 3	.....
8880	Char Iswardia, pargana Mymensingh.	822	Do. ...	.....	Brojendra Kishore Roy Chaudhury and others.	.....	64 14 9	.....

Mymensingh Collectorate, the 13th May 1905. W. B. THOMSON, Collector.

Notification A.

NOTICE is hereby given, under sections 6 and 13, Act XI of 1859, that the undermentioned estates and shares of estates in the district of Burdwan will be put up for sale at the office of the Collector of that district on the 21st June 1905 at 12 o'clock noon for arrears of revenue for March 1905 kist and other demands, which by law are realizable as arrears of land revenue.

When in columns 5, 7 and 9 of the appended statement it is stated that only a share is to be sold, it is to be understood that a separate account is kept for that share.

Tauzi No.	Name of mahal and pargana.	Sadar jama of whole estate.	Whether the whole estate is to be sold.	If only a share is to be sold, specification of such share or shares.	Names of proprietors of property to be sold.	If only a share is to be sold, the sadar jama of such share.	If the whole estate is to be sold, the arrears due from it.	If only a share is to be sold, the arrears due from it.
1	2	3	4	5	6	7	8	9
		Rs. A. P.					Rs. A. P.	
17	Chak Durga, pargana Kanthati.	9,939 2 11	Whole estate is to be sold.	.....	Seyadani Aymana Bibi ...	.....	3,434 0 1	.....

Burdwan Collectorate, the 16th May 1905. P. H. O'BRIEN, Collector.

Notification A.

NOTICE is hereby given, under sections 6 and 13, Act XI of 1859, that the undermentioned estates and shares of estates in the district of Nadia will be put up for sale at the office of the Collector of that district on the 23rd June at 12 noon, for arrears of revenue and other demands, which by law are realisable as arrears of land revenue.

When in columns 5, 7 and 9 of the appended statement it is stated that only a share is to be sold, it is to be understood that a separate account is kept for that share, and that the other share or shares in the estate are excluded from the sale.

Tauzi No.	Name of mahal and pargana.	Sadar jama of whole estate.	Whether the whole estate is to be sold.	If only a share is to be sold, specification of such share or shares.	Names of proprietors of property to be sold.	If only a share is to be sold, the sadar jama of such share.	If the whole estate is to be sold, the arrears due from it.	If only a share is to be sold, the arrears due from it.
1	2	3	4	5	6	7	8	9
		Rs. A. P.				Rs. A. P.	Rs. A. P.	Rs. A. P.
266	Jagadanandpur, pargana Bagowan.	955 14 11	Whole ...	.....	Jotindra Nath Ray ...	.....	3 10 2	.....
61	Balia, pargana Plassy ...	5,631 0 9	.....	1a. 13g. 1c. 3d. (separate account No. 61-1).	Dub Mohini Dasi and others.	586 9 1	.....	49 10 3
61	Ditto, ditto ..	5,631 0 9	.....	16g. 2c. 6d (separate account No. 61-4).	Ditto ditto ...	293 4 7	.....	3 7 6
			Total ...	2a. 10g.				
				The other shares, viz., 13a. 10g., will be excluded from the sale.				
213	Gopalpur, pargana Shahanjial.	2,176 0 5	.....	11a. 15g. 2c. 2kg. (separate account No. 213-0).	Panchanan Mazumdar, self and guardian on behalf of Lalis Mohan Mazumdar.	1,607 4 3		1 10 2
				The other share, viz., 4a. 4g. 1c. 2kg., will be excluded from the sale.				
3327	Pakuria, pargana Taragonia.	777 6 0	.....	5a. 13g. 3c. 1d. (residue) ...	Bama Charan Choudhury.	728 6 4	.....	3 6 2
				The other shares, viz., 10a. 6g. 2kg. 2d., will be excluded from the sale.				
840	Chur Kaipal, pargana Shahanjial.	1,390 0 0	Whole ...	.....	Monmohan Ray, self and guardian for Kedar Nath Ray.	.....	1 5 5	.....

Nadia Collectorate, the 20th May 1905. R. S. GREENSHIELDS, Collector.

Notification B.

NOTICE is hereby given, under sections 5 and 13, Act XI of 1859, that unless the arrears mentioned below are paid on or before the next latest date of payment, viz., the 28th April 1905, the undermentioned estates or shares of estates in the district of Puri will be put up for sale at the office of the Collector of that district on the 10th July 1905 at 12 o'clock noon for the said arrears.

When in columns 5, 7 and 9 of the appended statement it is stated that only a share is to be sold, it is to be understood that a separate account is kept for that share, and that the other share or shares in the estate not specifically mentioned in column 5 are excluded from the sale.

Tauzi No.	Name of mahal and pargana.	Sadar jama of whole estate.	Whether the whole estate is to be sold.	If only a share is to be sold, specification of such share or shares.	Names of proprietors of property to be sold.	If only a share is to be sold, the sadar jama of such share.	If the whole estate is to be sold, the arrears due from it.	If only a share is to be sold, the arrears due from it.	Nature and amount of demand for which to be sold.
1	2	3	4	5	6	7	8	9	10
		Rs. A. P.		A. P.		Rs. A. P.	Rs. A. P.	Rs. A. P.	
185/2	Killah Rupas, pargana Athais.	1,689 0 0		Kismat ... 9 4	Trilochan Chaudhuri and others.	985 5 0	..	491 11 0	Due for first April 1905.
166/1	Ta. Ganeswarpur, pargana Banchas.	1,619 0 0	..	" ... 9 0	Baladev Prakas Bramhachari.	910 11 0	.....	455 0 0	Ditto.
166/2	Ditto ...	1,619 0 0	.....	" ... 7 0	Chandra Moni Debya, mother and guardian of Hanuman Khentia.	708 5 0	.....	354 0 0	Ditto.
66	Ma. Durgadaspur, pargana Kotrahang.	579 0 0	Whole ...	.....	Raja Makund Dev ...	...	439 0 0	.....	Ditto.
79/6	Ma. Thanthana, pargana Kotrahang.	653 0 0	.....	Kismat ... 13 0	Dinanandhu Pain, brother and guardian of Gopi Nath Pain and others.	530 9 0	.....	264 14 0	Ditto.
347	Ta. Amuri, pargana Purbadual.	1,216 0 0	...	" ... 8 0	Nayanmali Jenadie, mother and guardian of Durga Charan Jagadeb Rai.	608 0 0	.....	304 0 0	Ditto.
347/3	Ditto ...	1,216 0 0	.....	" ... 8 0	Radha Mohan Rai ...	608 0 0	....	304 0 0	Ditto.

Puri Collectorate, the 7th April 1905. J. R. BLACKWOOD, Collector.

Notification A.

NOTICE is hereby given, under sections 6 and 13, Act XI of 1859, that the undermentioned estates and shares of estates in the district of Backergunge will be put up for sale at the office of the Collector of that district on the 23rd June 1905 corresponding to 9th Ashar 1312 B.S., at 12 noon for arrears of revenue and other demands, which by law are realisable as arrears of land revenue.

When in columns 5, 7 and 9 of the appended statement it is stated that only a share is to be sold, it is to be understood that a separate account is kept for that share.

Touzi No.	Name of mahal and pargana.	Sadar jama of whole estate.	Whether the whole estate is to be sold.	If only a share is to be sold, specification of such share or shares.	Names of proprietors of property to be sold.	If only a share is to be sold, the sadar jama of such share.	If the whole estate is to be sold, the arrears due from it.	If only a share is to be sold, the arrears due from it.
1	2	3	4	5	6	7	8	9
		Rs. A. P.				Rs. A. P.	Rs. A. P.	Rs. A. P.
1445	Jear Durgapur, pargana Moesergomedpur.	824 4 10½	.....	Residuary share 10a. will be sold and share 6a. will be excluded from the sale.	Pyari Mohon Pal and others.	512 10 10½	.....	141 5 3½
1446	Mahal Darihat, Rajabariguni, pargana ditto.	944 9 7	.....	Residuary share 14a. 15g. will be sold and share in 5g. will be excluded from the sale.	Raja Sree Nath Roy Choudhury and others.	870 12 7	.....	87 1 0½
1479	Taluk Ganga Gobindo Nag and others, pargana ditto.	806 9 8½	Whole ...	.....	Chandra Bin de Pal Choudhury and others.	.....	215 7 3	.....
1833	Taluk Krishna Prosad Guha, pargana ditto.	3,060 15 8	Do. ..	.....	Brojo Lal Roy Choudhury and others.	.....	166 4 10½	.....
1629	Jear Ramna Bamna, taluk Mohammad Safi, pargana ditto.	19,487 10 8	.....	Separate account No. 2 share— 6a. 1g. 2kr. 2kt. 1gd 3kr. 1kt. 8til will be sold, and share 9a. 18g. 1kr. 19til 3kr. 3kg. 18gd. 14t. 12til will be excluded from the sale.	Mr. G. L. Garth and Mr. H. L. Weatherall, trustees to the estate of Golam Abad Choudhury and others.	7,406 13 0	.....	38 14 5
1678	Taluk Said Miron, pargana ditto.	1,183 14 9½	Whole ...	.....	Iochamoyee Gupta and others.	.....	444 11 0½	.....
2845	Silimabad zamindari 13g., pargana Silimabad.	3,509 8 0½	.....	Residuary share 7a. 10g. will be sold, share 2a. 16g. 2½kr. will be sold separately and the rest 5a. 13g. 1½kr. will be excluded from the sale.	Kasiswari Choudhurani, executrix to the estate of her husband Durga Narayan Roy Choudhury.	1,687 4 2½	.....	742 3 9½
2846	Ditto ...	3,509 8 0½	.....	Separate account No. 1 share— 2a. 16g. 2½kr. will be sold, share 7a. 10g. will be sold separately and share 5a. 13g. 1½kr. will be excluded from the sale.	Ditto ...	837 6 7	.....	181 3 9½
4538	Abad Debpur, pargana Satnadi Kalikapur.	2,333 0 0	Whole ...	.....	Satis Chandra Chakravarti and others.	.....	1,749 12 0	.....
4542	Padma alias Ramjanpur, pargana Kasimpur, Sahalapatti.	5,383 0 0	Do. ...	.....	Ambica Charan Chakravarty and others.	.....	2,691 0 0	.....
4767	Char Udaypur, pargana Chandradwip.	566 0 0	Do. ...	.....	Babu Chandi Charan Chatterjee, Manager, Court of Wards, to the estate of Sir Raja Souriudra Mohan Tagore, Kt., C.I.E., etc., and another.	.....	566 0 0	.....
5196	Char Kakra, together with Rampur, pargana Jasra.	7,939 0 0	Do. ...	.....	Abdul Goni and others.	.....	1,365 15 0	.....
5203	Char Manpura, pargana Jasira.	1,016 2 0	Do. ...	.....	Aseroddin and others	.....	516 0 0	.....
6064	Surplus land of thak Koyaria, pargana Kasimpur Sahalapatti.	888 0 0	Do. ...	.....	Syed Mohammad Mozaffar Hoshen Choudhury and others.	.....	705 10 0	.....

Backergunge Collectorate, the 11th May 1905. H. C. STREATFEILD, Collector.

Notice.

NOTICE is hereby given, under sections 6 and 13 of Act XI of 1859, that the undermentioned estate and share of estate in the district of the 24 Parganas will be put up for sale at the office of the Collector of that district on the 17th July 1905, at 12 o'clock noon, for arrears of revenue and other demands which by law are realised as arrears of land revenue.

When in columns 5, 7 and 9 of the appended statement it is stated that only a share is to be sold, it is understood that separate account is kept for that share and that the share or shares are excluded from sale.

Consecutive number	Touzi No.	Name of pargana and mahal.	Sadar jama for the whole estate.	Whether the whole estate is to be sold.	If only a share is to be sold, the specification of such share.	Names of proprietors of properties to be sold.	If only a share is to be sold, the sadar jama of such share.	If the whole is to be sold, the arrears due from it.	If only a share is to be sold, the arrears due from it.
1	2	3	4	5	6		8	9	10
1	392/1	Azimabad, kismat Budajoy-Chandipore.	Rs. A. P. 6,513 7 8	.....	Excluding 12as. share, remaining 4as. share.	Radhabinode Mundal and others.	Rs. A. P. 2,075 5 1½	.....	Rs. A. P. 711 1 2½

Alipore, the 8th May 1905. BHUPATI CHAKRAVARTTI, for Collector.

Notification A.

NOTICE is hereby given, under sections 6 and 13, Act XI of 1859, that the undermentioned estates and shares of estates in the district of Midnapore will be put up for sale at the office of the Collector of that district on the 27th June 1905 at 12 o'clock for arrears of revenue and other demands which by law are realisable as arrears of land revenue.

When in columns 5, 7 and 9 of the appended statement it is stated that only a share is to be sold, it is to be understood that a separate account is kept for that share.

Tauzi No.	Name of mahal and pargana.	Sadar jama of whole estate.	Whether the whole estate is to be sold.	If only a share is to be sold, specification of such share or shares.	Names of proprietors of property to be sold.	If only a share is to be sold, the sadar jama of such share.	If the whole estate is to be sold, the arrears due from it.	If only a share is to be sold, the arrears due from it.
1	2	3	4	5	6	7	8	9
		Rs. A. P.				Rs. A. P.	Rs. A. P.	Rs. A. P.
275	Pargana tappa Balisita, mahal Bnitorebinode, 4 annas' share.	1,658 14 9	.....	Residuary share, excluding separate account No. I—10a. 13g. 1k. 1kt. share of the mahal. All other shares than that specified will be excluded from sale.	Chowdry Gopendra Nundan Das Mahapatra.	1,165 15 8	.....	81[illegible] 3 0
312	Pargana Batitaki, mahal Palgeria.	630 1 7	Entire ...	.....	Mohendra Nath Pal, sabait of Lukshmi Janardan Jew.	...	290 7 0	.....
380	Pargana Bhuniamutta, mahal Haripore alias Banamalipore.	920 13 8	.....	Residuary share, excluding separate account No. I—15a. 4g. share of the mahal. All other shares than that specified above will be excluded from sale.	Kripasindoo Masanta and others.	874 12 8	.....	372 0 0
535	Pargana Chetua, mahal Dubrajpore.	3,408 10 1	.....	Separate account No. I—8a. share of the mahal. All other shares than that specified above will be excluded from sale.	Sreemati Mangala Dasi and others.	1,704 4 11	.....	356 13 8
535	Ditto ...	3,408 10 1	.....	Separate account No. III—3a. share of the mahal. All other shares than that specified above will be excluded from sale.	Jotindra Nath Sing and others.	639 1 11	.....	219 11 10
558	Pargana Dakhinmal, mahal Haripore.	6,769 1 5	.....	Separate account No. 41—8a. share of the mahal. All other shares than that specified will be excluded from sale.	Haripriya Debi	3,384 5 9	.....	1,480 8 3
720	Pargana Eqrachore, mahal Bhatda.	3,613 6 4	.....	Residuary share, excluding separate accounts Nos. 3, 4, and 10 to 24— As. G. K. KT. Mauza Baria alias Jharia ... 16 0 0 0 M. Gopinathpore ... 16 0 0 0 M. Karakpara ... 16 0 0 0 M. Miregapore ... 16 0 0 0 M. Naraharipore 16 0 0 0 M. Sundarpore 16 0 0 0 M. Malikpore ... 0 3½ 0 0 M. Mahanagore 0 3½ 0 0 M. Jagannathpore ... ... 5 6 2 2 As. G. KG. TIL. M. Kamardiha... 3 9 9 15 K. M. Dabeta alias kist Dambata 1 15 2 18 KS. M. Nobipore ... 9 11 6 14 M. Tetulmari ... 12 0 0 0 M. Bhatda ... 8 11 6 3 1 K. M. Gonipore ... 3 0 0 0 M. Narainbar .. 16 0 0 0 All other shares than that specified above will be excluded from sale.	Chowdry Gopendra Nundan Das Mahapatra.	1,311 8 0	.....	203 8 0
880	Pargana Kalindibalsai, mahal Chaddahazari.	2,278 11 0	.....	Separate account No. III—8a. share of the mahal. All other shares than that specified above will be excluded from sale.	Haripriya Debi	1,139 5 6	.....	497 3 4
907	Pargana Kasijora, mahal Bazitola alias Deulbar.	1,530 4 0	.....	Residuary share, excluding separate account No. I—14a. 10g. share of the mahal. All other shares than that specified will be excluded from sale.	Syed Aftauddin Ahmed	1,386 12 7	.....	650 7 0, January and March 1905.
921	Pargana Kasijora, mahal Chakdaha alias Radaballuvchak.	9,185 8 0, including police.	.....	Separate account No. 4—4a. 5g. share of the mahal. All other shares than that specified will be excluded from sale.	Ashutosh Chatterjee and others.	2,439 14 3, including police.	.....	1,141 12 10, including police.
921	Ditto ...	9,185 8 0, including police.	.....	Separate account No. 6—1a. 15g. share of the mahal. All other shares than that specified will be excluded from sale.	Ditto ...	1,004 10 7, including police	.....	469 5 10, including police

Tauzi No.	Name of mahal and pargana.	Sadar jama of whole estate.	Whether the whole estate is to be sold.	If only a share is to be sold, specification of such share or shares.	Names of proprietors of property to be sold.	If only a share is to be sold, the sadar jama of such share.	If the whole estate is to be sold, the arrears due from it.	If only a share is to be sold, the arrears due from it.
1	2	3	4	5	6	7	8	9
		Rs. A. P.				Rs. A. P.	Rs. A. P.	Rs. A. P.
937	Pargana Kasijora, mahal Gurparusattampore *alias* Chaitnyapore.	738 10 8	.....	Residuary share, excluding separate accounts Nos. 1 and 2—12a. 16g. share of the mahal. All other shares than that specified will be excluded from sale.	Ganganarain Maity and others.	590 14 8	.....	259 8 11, January and March 1905.
972	Pargana Kasijora, mahal Kadalia.	1,450 14 1	Entire ...	.....	Debendra Nundan Das Mahapatra.	.....	8 13 10	.....
1057	Pargana Kasijora kist, mahal Manur.	2,290 6 10	Do. ...	.....	Damudar Das Barman, sabait of Samaljew Tagore.	.....	1,046 13 6	.....
1660	Pargana Khandar, mahal Panchpara.	4,053 11 5	.....	Separate account No. I— Mauza Abdulla— M. Aroon. M. Aroon chak. M. Fateh chak. M. Gokulpore. M. Jamunda. M. Kamal chak. M. Monohar chak. M. Pai Gokul. M. Rasik chak. M. Ranihati. M. Rai chak. M. Binode chak. M. Madhu Sudan chak. M. Pithai chak. Eight annas' share of all the above mauzas. All other shares than that specified will be excluded from sale.	Krishna Chandra Kar and others.	632 5 6	.....	293 7 1
1731	Pargana Moynachore, mahal Ankapurba.	1,001 7 2	.....	Residuary share, excluding separate account No. I—8a. share of the mahal. All other shares than that specified will be excluded from sale.	Ganganarain Maity ...	500 11 7	.....	235 15 0
1395	Pargana Naraingurkist, mahal Khelar *alias* Bonpatua.	3,415 1 7	.....	Residuary share, excluding separate accounts Nos. 1 to 4— A. G. K. KT. Mauza Alichak . 5 6 2 2 M. Baksubeg 10 13 1 1 M. Balaram Chaita. 16 0 0 0 M. Banpatna ... 16 0 0 0 M. Bagberia ... 16 0 0 0 M. Baligeria .. 16 0 0 0 M. Benaparadihi 16 0 0 0 M. Bramhanibhera. 10 13 1 1 M. Kalikachuk ... 5 6 2 2 M. Kuchaibhalluk 16 0 0 0 M. Khalaridihi ... 16 0 0 0 M. Khatrageria chak. 10 13 1 1 M. Lahabaranchak. 10 13 1 1 M. Madhuchak ... 5 6 2 2 M. Mandalageria 5 6 2 2 M. Madhabchak 5 6 2 2 M. Nischindipur 16 0 0 0 M. Lekrageria ... 5 6 2 2 M. Parijatnagar 16 0 0 0 M. Punjachotta 5 6 2 2 M. Purusattamchak. 16 0 0 0 M. Prempura ... 16 0 0 0 M. Raghunathpore. 16 0 0 0 M. Raipore ... 16 0 0 0 M. Satrughanbar 5 6 2 2 M. Sawtalchak ... 5 6 2 2 M. Sekharpari ... 16 0 0 0 M. Tatra ... 10 13 1 1 M. Ucchabanudabar. 5 6 2 2 M. Bhagabanpore 16 0 0 0 M. Chaita ... 16 0 0 0 M. Deulbar ... 5 6 2 2 M. Harachak ... 5 6 2 2 M. Hiraparee ... 10 13 1 1 M. Hiraparee-chak. 10 13 1 1 M. Koitpore ... 5 6 2 2 M. Kaimkhan ... 10 13 1 1 M. Kaimkhan-chak. 10 13 1 1 M. Kalidasbhera 10 13 1 1 All other shares than that specified will be excluded from sale.	Chowdry Krishna Chandra Das Mahapatra and others.	2,441 1 2	.....	339 13 5, January and March 1905.
2247	Pargana Sabong, mahal Mohar.	1,445 9 0	Entire ...	.....	Sarat Chandra Jana and others.	.....	679 8 0	
2427	Pargana Shahapore, mahal Hasimpore.	1,014 2 10, including police.	Do. ...	.....	Sarat Chandra Singha-Chowdery.	.....	190 11 4 Land revenue.	.....
2577	Pargana Shipore, mahal Logua.	2,619 5 3	.....	Separate account No. 22— A. G. K. Mauza Akbar- 10 0 3 M. Aulda ... ... 7 0 3 M. Barastia ... ... 10 0 3 M. Bohalia ... ... 10 0 3 M. Khagda .. ... 10 0 3 M. Khurutia ... 10 0 3 M. Modekool ... 10 0 3	Srimati Tillotoma Debi, mother and guardian of Chow. Narendra Nath Pahari, minor.	1,376 15	.....	639 7 1

Tauzi No.	Name of mahal and pargana.	Sadar jama of whole estate.	Whether the whole estate is to be sold.	If only a share is to be sold, specification of such share or shares.	Names of proprietors of property to be sold.	If only a share is to be sold, the sadar jama of such share.	If the whole estate is to be sold, the arrears due from it.	If only a share is to be sold, the arrears due from it.
1	2	3	4	5	6	7	8	9
		Rs. A. P.		A. G. K. KG. M. Madhab Chandra Chak ... 10 0 3 0 M. Logura .. 6 1 3 0 M. Panarul ... 3 10 0 6 M. Nagat Khanda 10 0 3 0 M. Shiporebar ... 10 0 3 0 M. Takapara ... 10 0 3 0 M. Gopalpore ... 6 1 3 0 M. Jagunia ... 10 0 3 0 M. Kanongobar.. 3 10 0 6 M. Kanooprojapeti list ... 3 10 0 6 M. Kuarpore ... 10 0 3 0 M. Krishnapore... 10 0 3 0 M. Brindabanpore 7 0 3 0 M. Chaulda ... 6 1 3 0 M. Dubda ... 10 0 3 0 M. Dubdaha Taki 10 0 3 0 M. Dhusurda ... 7 0 3 0 M. Gobrachak ... 10 0 3 0 M. Godaychak ... 7 0 3 0 All other shares than that specified will be excluded from sale.			Rs. A. P.	
				Part II.				
2917	Pargana Jalamutta, mahal Koomal Erinch Bistan Baindabazar Jalpai.	3,360 14 2	Entire ..	.....	Sreemati Haripriya Debi	.....	1,675 5 8	.....
2876	Pargana Potaspore, mahal Dehatgokulpore.	28,049 0 0	Do. ...	.....	Chowdry Gopendra Nundan Das Mahapatra.		22,788 13 0, January and March 1905.	.....
				Part III.				
2964	Pargana taraf Bisnan, mahal Garshar, &c., bajapti No. 147.	814 0 0	Entire ...	.....	Panchanon Mirdhya ...		262 6 0	..... Malguzari right will be sold.

Midnapore, the May 1905. J. N. Roy, Covd. Deputy Collector in charge.

Notification B.

NOTICE is hereby given under section 5, Act XI of 1859, that unless the arrears mentioned below are paid on or before the next latest date of payment, viz., the 28th June 1905, the undermentioned estates or shares of estates in the district of Midnapore will be put up for sale at the office of the Collector of that district on the 30th June 1905, at 12 o'clock noon for the said arrears.

When in columns 5, 7 and 9 of the appended statement it is stated that only a share is to be sold, it is to be understood that a separate account is kept for that share, and that the other share or shares in the estate are excluded from the sale.

Tauzi No.	Name of mahal and pargana.	Sadar jama of the whole estate.	Whether the whole estate is to be sold.	If only a share is to be sold, specification of such share or shares.	Names of proprietors of property to be sold.	If only a share is to be sold, the sadar jama of such share.	If the whole estate is to be sold, the arrears due from it.	If only a share is to be sold, the arrears due from it.	Nature and amount of demand for which to be sold.
1	2	3	4	5	6	7	8	9	10
478	Pargana Chandrakona, mahal Kuldaha.	Rs. A. P. 10,784 7 2	.....	Separate account No. 1, 4a. 5g. 1ch. 1k. share of the mahal. All other shares than that specified will be excluded from sale.	Paran Ch. Ray and others.	Rs. A. P. 2,675 13 8	Rs. A. P.	Rs. A. P. 144 9 0	Rs. A. P. Revenue— 144 9 0
944	Pargana Kasijora, maha Gumukpota.	3,185 0 0 including police.	.....	Separate account No 1. 8 annas share of the mahal. All other shares than that specified will be excluded from sale.	Munimuhun Ray ...	1,592 8 0 including police.	.....	742 2 0 including police.	Revenue— 742 8 0 Police— 5 10 0 Cess— 48 13 9 Embankment— 84 0 0
2863	Pargana Sabong, mahal Palpara.	733 3 6	Entire ...	.....	Sya. Tarangini Dasi and others.	.....	171 13 6 January and March 1905.	.....	Revenue— 171 13 6 Cess— 18 14 6

Midnapore Collectorate, the May 1905. J. N. Roy, Covtd. Deputy Collector in charge.

Notice of Sale.

NOTICE is hereby given, under sections 6 and 13 of Act XI of 1859, that the undermentioned estates and shares of estates in the district of 24-Parganas will be put up for sale at the office of the Collector of that district on the 27th June 1905 at 12 o'clock noon for arrears of revenue and other demands which by law are realizable as arrears of land revenue.

When in columns 5, 7 and 9 of the appended statement it is stated that only a share is to be sold, it is to be understood that a separate account is kept for that share and that other share or shares are excluded from sale.

Consecutive No.	Tauzi No.	Name of pargana and mahal.	Sadar jama of the whole estate.	Whether the whole estate is to be sold.	If only a share is to be sold, the specification of such share.	Names of proprietors of the properties to be sold.	If only a share is to be sold, the sadar jama of such share.	If the whole estate is to be sold, the arrears due from it.	If only a share is to be sold, the arrears due from it.
1	2	3	4	5	6	7	8	9	10
			Rs. A. P.				Rs. A. P.	Rs. A. P.	Rs. A. P.
1	1	Magura, Chetla and others.	5,422 9 3	.....	12a. 15g. 3k. 1kg. 8t. of the entire estate minus 3a. in each of the mauzas as Srirampore, Baghirghole and Rajeb Molla's Chak.	Kali Chandra Roy Choudhury and others.	1,161 9 10½	.....	857 13 4
2	2	Magura, kismat Kanganberia and others.	2,823 15 2½	.....	4a. 5g. 2k. 5½d. of the entire estate minus 4a. 5g. 2k. 5½d. of mauzas Chetla and Alipore.	Kali Nibaran Roy Choudhury.	738 11 11½	.....	233 14 2
3	3-1	Magura, Laskarpore and others.	3,389 13 6½	.....	6a. share, excluding 10a. of the entire estate.	Bindoobashini and Gonesh Jononi Debi guardian of Rajendro Kumar Roy Choudhury.	3,106 10 7½	.....	1,312 6 9
4	6-1	Magura, kismat Joolpia and others.	3,489 1 3	....	Excluding 110a., remaining 6a. share.	Ditto ...	1,307 7 9½	.....	671 1 10½
5	9	Magura, kismat Chetla and others.	810 0 6½	Whole ...	.....	Surendro Nath Roy and others.	.....	156 11 1½	.....
6	10	Ditto ...	809 10 1½	Do. ...	.....	Ram Kali Roy Choudhury and others.	.....	98 4 0	.....
7	12	Ditto ...	810 11 3½	Do. ...	.....	Mohit Kali Debi and others.	.....	195 5 11½	.....
8	13	Magura, kismat Khariberia and others.	4,078 14 11½	.....	Excluding 3a., remaining 13a. share.	Kali Shoshi Roy Choudhury and others.	3,312 13 8½	.....	976 5 6
9	13-1	Ditto ...	4,078 14 11½	.....	Excluding 13a2, remaining 3a. share.	Kali Pado Roy Choudhury.	766 1 3	.....	246 1 6
10	53	Magura, kismat Rameswarpur and others.	3,125 1 2		Residuary share, i.e., entire estate minus shares composed in the separate account Nos. 1 to 9.	Dwija Das Bhaduri, Manager, Court of Wards, and another.	2,102 1 0½	.....	551 10 4
11	56	Magura, kismat Sriramporo.	3,126 5 7½	.....	Excluding 1a. 15g. 2k. 2d., remaining 14a. 4g. 1k. 2kr. 1d.	Kristo Prosonno Mondal and others.	2,778 15 8½	.....	999 5 7
12	85	Magura, kismat Angachia and others.	984 14 7	.....	The whole estate minus 7a. share in mauza Chak Kantalia, and 2a. 1g. 2k. share in each of the mauzas kismat Babanpur and Nona.	Trailokhinath Barua ...	861 11 10	.....	239 4 9
13	120	Baridhati, kismat Kadalia and others.	5,093 5 2½	Whole ...	.....	Harihar Chatterjee ...	.....	1,845 13 1½	.....
14	152	Khaspore, Srirampore and others.	703 8 8	.....	14a. 4g. 1k. 2kt. 7d. share, excluding 1a. 15g. 1k. 1kr. 2d.	Kristo Prosonno Mondle and others.	625 5 11	.....	136 3 9
15	230	Khaspore, Dhakuria and others.	1,064 11 10	.....	10a. share minus 1a. 15g. 2k. 2d. share in each of the mauzas Garia and Berju.	Sarat Kumari Dasi and others.	1,046 10 9	.....	60 3 9
16	250-9	Midanmolla, Barutpore and others.	62,620 2 7	.....	1a. 17g. 4d. share, excluding 14a. 8g. 3k. 5d. share.	Jitendro Kumar Roy Chowdhri.	5,115 15 7	.....	198 13 6
17	251	Medan Molla, Rajpur and others	1,075 2 2½	.....	11a. 11g. 1kr. 1d. share, excluding 4a. 8g. 3k. 1kr. 2d. share.	Kedar Nath Roy Choudhury and others.	776 7 10	.....	98 13 7
18	253	Pargana Mudan Molla, Kharampara and others.	1,079 3 6	.....	11a. 11g. 1kr. 1d. share, excluding 4a. 8g. 3k. 1kr. 2d.	Kedarnath Roy Choudhury and others.	779 7 0	.....	46 2 2
19	314	Muragacha, Harinarainpore and others.	13,200 13 6½	.....	7a. 11g. 2k. 2kg. 15t. 1k. share of the entire estate.	Banki Behari Mandal and others.	5,747 4 5	.....	848 7 4
20	315-1	Muragacha, Roghunathpore and others.	10,220 15 6	.....	18g. 3k. share, excluding 18a. 1g. 1k. share	Kristo Prasanna Mandal and others.	849 6 7½	.....	189 3 10
21	315-3	Ditto	10,220 15 6	.....	Excluding 13a. 19g. 2k. 2kr. 2d. share, remaining 2a. 1k. 1d. share.	Gopi Kisore Mandal and others.	1,287 9 11½	.....	676 1 11
22	315-11	Ditto ...	10,220 15 6	.....	Excluding 14a. 17g. 2k. share, remaining 1a. 2g. 2k. share.	Apurba Kumari Dasi ...	719 4 9	.....	375 13 10
23	326	Muragacha, Bistoopore and others.	2,443 3 0	.....	Excluding 15a. 12g. share, remaining 4g. share.	Jotindra Nath Roy Choudhury and others.	1,312 2½	.....	685 14 9
24	327-1	Muragacha, Dharapare and others.	1,064 7 4	.....	Ditto	Uma Prosad Ghose ...	532 3 8	.....	278 14 10
25	346	Balia Santoshbati and others.	5,551 0 9	....	Excluding 2a. 13g. 3k. 2kr. 2d., remaining 13a. 6g. 1kr. 1d. share.	Brojendranath Mandal and others.	4,896 15 4	.....	336 3 1
26	383	Azimabad Hudarashkhali and others.	19,434 8 1½	.....	In each of the mauzas except Khakramuri 15g. share.	Gopikisore Mandal and others.	900 2 7½	.....	614 5 11
27	385-1	Ditto ...	19,434 8 1½	.....	Ditto 1a. 2g. 2k. share.	Nobokisore Mandal and others.	1,385 12 7	.....	393 0 9
28	385-4	Ditto ...	19,434 8 1½	.....	Excluding 15a. 4g. 2k. 2kr. remaining 15g. 1k. 1kr. share.	Brojendra Nath Mandal	918 8 7½	.....	518 13 10
29	385-5	Ditto ...	19 34 8 1½	.....	1a 1g. 2k. 1d. share of the entire estate.	Gopi Kissore Mandal and others.	1,303 10 7½	.....	738 15 8
30	385-6	Ditto ...	19,434 8 1½	.....	Excluding 15a. 4g. 2k 2kr., remaining 15g. 1k. 1kr. share.	Kristo Prosanna Mandal	928 8 7½	.....	518 13 10
31	385-9	Ditto ...	19,434 8 1½	.....	Excluding 14a. 17g. 2k., remaining 1a. 2g. 2k. share.	Apurba Kamari Dasi ...	1,363 8 7½	.....	761 11 8
32	385-10	Ditto ...	19,434 8 1½	.....	Excluding 15a. 4g. 2k. 2kr., remaining 15g. 1k. 1kr. share.	Sarat Kumari Dasi ...	938 8 7½	.....	259 3 1
33	385-11	Ditto ...	19,434 8 1½	.....	In all the mauzas except mauza Khagramori 13g. 1k. 1kr. share.	Kalidas Adak and others.	807 6 10	.....	224 10 4
34	385-12	Ditto ...	19,434 8 1½	.....	Excluding 15a. 10g. share remaining 10g. share.	Nobokisore Mandal and others.	605 9 5	.....	338 6 8
35	385-14	Ditto ...	19,434 8 1½	.....	Excluding 15a. 5g., remaining 15g. share.	Chandi Charan Mandal and others.	908 6 1	.....	507 13 3
36	388-1	Balia Moloyapore and others.	8,326 9 0	.....	Excluding 14a. 17g. 2k., remaining 1a. 2g. 2k. share.	Nobokisore Mandal and others.	585 8 2½	.....	180 2 11½
37	388-3	Ditto ...	8,326 9 0	.....	Excluding 14a. 18g. 1k. 2kr. 2d., remaining 1a. 1g. 2k. 1d. share.	Gopi Kissore Mandal and others.	560 3 6½	.....	183 14 6½
38	389-1	Balia Santoshpore and others.	9,401 5 10	.....	Excluding 14a. 17g 2k., remaining 1a. 2g. 2k. share.	Radha Binod Mandal and others.	663 5 10½	.....	171 7 0½
39	389-4	Ditto	9,401 5 10		Excluding 14a. 18g. 1k. 2kr. 2d., remaining 1a. 1g. 2k. 1d. share.	Gopi Kissore Mandal and others.	614 11 3½	.....	176 12 11½

...ive No	Tauzi No.	Name of pargana and mahal.	Sadar jama of the whole estate.	Whether the whole estate is to be sold.	If only a share is to be sold, the specification of such share	Names of proprietors of the properties to be sold.	If only a share is to be sold, the sadar jama of such share.	If the whole estate is to be sold, the arrears due from it.	If only a share is to be sold, the arrears due from it.
1	2	3	4	5	6	7	8	9	10
	389-12	Balia, Santoshpur and others.	Rs. A. P. 9,401 5 10	.....	Excluding 14a. 17g. 2k., remaining 1a. 3g. 2k. share.	Apurba Kumari Dasi	Rs. A. P. 663 5 11	Rs. A. P.	Rs. A. P. 342 14 4
	391-5	Muragacha, Gomukhi, and others.	5,538 8 6	.....	Excluding 13a. 10g. 2k. 2kr., 2d., remaining 2a. 1k. 1d. share.	Gopikisor Mandal and others.	697 2 0	.....	229 0 11
	391-6	Ditto	5,538 8 6	.....	Excluding 14a. 6g. 2k. 2kr. remaining 1a. 18g. 1k. 1kr. share.	Kshirodamayee Dasi, widow of late Sashi Bhusan Biswas.	576 14 41	.....	157 15 2
	392	Azimabad, Huda Joychandipur.	6,313 7 8	.....	Excluding 13a. 6g. 2k. 2kr., remaining 2a. 13g. 1k. 1kr. share.	Nabakisor Mandal and others.	1,385 9 2	.....	538 7 5½
	392-1	Ditto	6,313 7 8	.....	Excluding 13a. share, remaining 4a. share.	Radhabinod Mandal and others.	2,078 5 11	.....	1,546 15 1
	392-3	Ditto	6,313 7 8	.....	Excluding 13a. 6g. 2k. 2kr., remaining 2a. 13g. 1k. 1kr. share.	Chandi Charan Mandal and others.	1,385 9 4	.....	538 10 0
	392-4	Ditto	6,313 7 8	.....	Ditto ditto ...	Nabakisor Mandal and others.	1,385 9 4	.....	548 9 11
	394-6	Azimabad, taraf Kisorepore.	7,108 12 11	.....	Excluding 14a. 6r. 2k. 2kr., remaining 1a. 13g. 1k. 1kr. share.	Srimaty Kshirodamoyi Dasi.	740 8 1	.....	154 7 9
	395	Azimabad, taraf Madhabpore.	14,657 13 11	.....	Excluding 6a., remaining 10a. share.	Baikuntha Nath Dey, and others.	9,161 2 8	.....	2,453 9 4
	395-1	Ditto ...	14,657 13 11	.....	Excluding 10a., remaining 6a. share.	Srimati Kiran Sashi Dasi, guardian of Kamal Kristo and Bata Kristo Mandal.	5,496 11 3	.....	2,453 8 8
	400	Balia Ramchandrapur and others.	747 11 1	Whole ...	.....	Radha Mohan Mandal...	.....	235 7 2	.....
	401-4	Azimabad Huda Ramkristapur and others.	8,941 9 7	.....	Excluding 14a. 14g. 2kr., remaining 1a. 5g. 3k. 1kr. share.	Gopi Kissore Mandal and others.	721 15 6½	.....	130 0 10½
	401-7	Ditto ...	8,941 9 7	.....	Excluding 14a. 17g. 2k., remaining 1a. 2g. 2k. share.	Krista Lal Mandal and others.	628 11 3½	.....	33 4 4
	401-11	Ditto ...	8,941 9 7	.....	Ditto ditto ...	Apurba Kumari Dasi...	628 11 3½	.....	294 15 10½
	403	Azimabad, taraf Patharbaria, and others.	5,143 3 3	.....	Excluding 9a. 14g. 2k. 2kr., remaining 6a. 5g. 1k. 1kr. share.	Ranka Behari Mandal and others.	2,014 6 6½	.....	381 11 4½
	403-2	Ditto ...	5,143 3 3	.....	Excluding 9a. 6g. 2k. 2kr., remaining 6a. 15g. 1k. 1kr. share.	Kshiroda Mayee Dasi, widow of Sashi Bhusan Biswas.	2,143 15 11	.....	418 4 8
	411	Magura, kismut Dhanyakhola and others.	2,518 5 7	Whole ...	.....	Manilal Banerjea ...	.....	758 8 5	.....
	1147	Modanmolla Komalpore and others.	1,082 10 3	.....	Excluding 4a. 8g. 3k. 1kr. 2d., remaining 11a. 11g. 1kr. 1d. share.	Durgadas Roy Chowdhury and others.	751 13 7	.....	23 13 1

24-Parganas Collectorate, Alipore, the 22nd May 1905. J. H. BERNARD, Collector.

Notification A.

NOTICE is hereby given, under sections 6 and 13, Act XI of 1859, that the undermentioned estates and shares of estates in the district of Birbhum will be put up for sale at the office of the Collector of that district on the 24th June 1905 at 11 A.M. for arrears of revenue and other demands, which by law are realisable as arrears of land revenue.

When in columns 5, 7 and 9 of the appended statement it is stated that only a share is to be sold, it is to be understood that a separate account is kept for that share, and that the other share or shares in the estate are excluded from the sale.

Tauzi No.	Name of mahal and pargana.	Sadar jama of whole estate.	Whether the whole estate is to be sold.	If only a share is to be sold, specification of such share or shares.	Names of proprietors of property to be sold.	If only a share is to be sold, the sadar jama of such share.	If the whole estate is to be sold, the arrears due from it.	If only a share is to be sold, the arrears due from it.
1	2	3	4	5	6	7	8	9
17	Kagash, pargana Mouresswar Sabek.	Rs. A. P. 17,183 13 0	.....	Residuary share 2a. 19g. 3k. 1kt. and 6d. share of mauzas Andahara Chuk, Alu-Bandi, Ishabpur, Ishanpur *alias* Ichabpur, Uttormath, Ekuti, Kalyanpur, Kagash, Kartickgunj, Kalipur, Kuchuighata, Kushumjatra, Kusmipur, Kristopur, Khatlopur, Khagra Chuk, Khirija, Chandpur, Jamkala, Jalla, Jhikordaha Chuk, Thakurgaown Chuk, Tikordaha, Tilpara Chuk, Dasi Bajejami-Rajeupti, Dhobagaon, Dhobajole, Nowapara, Nanas Chuk, Nirisha, Paikpara, Pargaon, Piasala, Rahara Chuk, Bella, Bipra-Salgoria, Busicha Chuk, Bhagabatipur, Moidipur, Mallati, Mahabatpur Chuk, Mohidipur Chuk, Mohespur, Maligaon Chuk, Mstery, Rasulgunj, Rajballav Chuk, Rupadihi, Salgoria, Sibpur, Salamath, Horikora, Horispur, Hazrapur, and 3a. 5g. 10keg of Bansra and Bahadoorgunj. All other shares than that specified will be excluded from the sale.	Asu Tosh Mookerjee and others.	Rs. A. P. 2,295 15 0	.....	Rs. A. P 156 9 .0

Birbhum Collectorate, Suri, the 4th May 1905. S. C. MUKERJEE, Collector.

Notification A of sale.

NOTICE is hereby given, under sections 6 and 13, Act XI of 1859, that the undermentioned estates and shares of estates in the district of Rangpur will be put up for sale at the office of the Collector of that district on the 22nd June 1905, at 12 noon, for arrears of revenue and other demands, which by law are realizable as arrears of land revenue.

Tauzi No.	Name of mahal and pargana.	Sadar jama of whole estate.	Whether the whole estate is to be sold.	If only a share is to be sold, specification of such share or shares.	Names of proprietors of property to be sold.	If only a share is to be sold, the sadar jama of such share.	If the whole estate is to be sold, the arrears due from it	If only a share is to be sold, the arrears due from it.
1	2	3	4	5	6	7	8	9
163	Kundi, pargana Kundi, 7 annas.	Rs. A. P. 19,673 10 8	No ...	The separate account bearing No. 163-1 comprising 16 annas of each of the mauzas Barahari Raghu, Budha, Gobardhan, Ghose Raghab, Jayram, Lakshan Kisamat chhota, Rajaram, Shaja Pukhari, Digaltari, Kashichak, Khalia, Lalu Kisamat, Sohandighi, Purandar Kashinathpur, and Khaleya kisamat and 8 annas share of each of the mauzas Fatehpur, Gopinathpur, Jinahar, Krishnapur, Ranipur, Sripur *alias* Srichandra Barakali Jama and Khalia.	Nabin Kishori Chaudhurani and others.	Rs. A. P. 1,471 1 11	.....	Rs. A. P. 194 3 1

NOTE.—All other shares besides that specified will be excluded from the sale.

Rangpur, the 28th April 1905. T. EMERSON, Collector.

Notification A.

NOTICE is hereby given under sections 6 and 13, Act XI of 1859, that the undermentioned estates and shares of estates in the district of Dacca will be put up for sale at the office of the Collector of that district on the 23rd June 1905 at 12 o'clock noon for arrears of revenue and other demands, which by law are realizable as arrears of land revenue:—

When in columns 5, 7 and 9 of the appended statement it is stated that only a share is to be sold, it is to be understood that a separate account is kept for that share, and that the other share or shares in the estate are excluded from the sale.

Tauzi No.	Name of mahal and pargana.	Sadar jama of whole estate.	Whether the whole estate is to be sold.	If only a share is to be sold, specification of such share or shares.	Names of proprietors of property to be sold.	If only a share is to be sold, the sadar jama of such share.	If the whole estate is to be sold, the arrears due from it.	If only a share is to be sold, the arrears due from it.
1	2	3	4	5	6	7	8	9
		Rs. A. P.		Residue— As. gds. kr. kt.		Rs. A. P.		Rs. A. P.
275	Pargana Talipabad, Siv Prosad.	1,146 10 7½	.....	13 6 2 2	Jasoda Lal Roy and others.	955 8 10½	.....	14 10 6
846	Pargana Rohanpur, Tapne Bowkanda John Hollo.	3,078 6 7½	.....	Residue— 9 13 1 1	Ditto ...	1,860 0 5	.....	139 6 9
2966	Pargana Ran Bhowal Mirali Haidar.	1,125 5 0	.....	Residue	Maharaja Surja Kant Acherjee and others.	618 4 4	.....	12 3 11½

Dacca Collectorate, the 13th May 1905. MOHENDRA CHUNDER MOZUMDAR, Deputy Collector in charge.

Notification A.

NOTICE is hereby given, under sections 6 and 13, Act XI of 1859, that the undermentioned estates and shares of estates in the district of Chittagong will be put up for sale at the office of the Collector of that district on the 17th July 1905 at 12 noon for arrears of revenue and other demands, which by law are realisable as arrears of land revenue.

When in columns 5, 7 and 9 of the appended statement it is stated that only a share is to be sold, it is to be understood that a separate account is kept for that share.

Tauzi No.	Name of mahal and pargana.	Sadar jama of whole estate.	Whether the whole estate is to be sold.	If only a share is to be sold, specification of such share or shares.	Names of proprietors of property to be sold.	If only a share is to be sold, the sadar jama of such share.	If the whole estate is to be sold, the arrears due from it.	If only a share is to be sold, the arrears due from it.
1	2	3	4	5	6	7	8	9
391		Rs. A. P.				Rs. A. P.	Rs. A. P.	Rs. A. P.
391 to 397	Thana Satkania, taraf mauza Amirabad, Bahalt taraf Mangatram Hazari.	1,401 13 3	Only a share is to be sold.	Residuary share No. 3 ...	Taran Sing Hazari and Sm. Golap Kumari Thakurani.	908 15 8	.....	170 4 11
398								
398 to 399	Thana Bhatiary, taraf Ahamedullah Nasrullah.	720 14 8	Whole estate is to be sold.	.....	Fazal Rohaman and Rajjab Ali	...	196 3 3	.....

NOTE.—The figures shown in columns 8 and 9 represent the arrears remaining unpaid on the 25th May 1905.

Chittagong Collectorate, the 8th June 1905. F. P. DIXON, Collector.

Advertisement of Sale.

NOTICE is hereby given that the undermentioned plots of land, no longer required by Government, situated along the South Behar Section Railway, in the district of Monghyr, will be put up to sale at 10 o'clock on the 8th day of July 1905, corresponding with the 21st Asadh 1312 Fusli, at Barhi, village Indupur.

The purchasers of the several plots of land will be subject to the following conditions:—

1st.—The purchasers will have no power to make any excavations on the land nearer than 15 feet from the railway fencing, or plough the land closer than 3 feet from its foundation.

2nd.—If the amount of purchase-money does not exceed Rs. 100, the whole amount must be paid down at once.

3rd.—If the amount of purchase-money exceed Rs. 100, one-fourth of the amount must be immediately deposited. If the balance be not paid by noon of the fifteenth day after the sale, reckoning the day of sale as one, or if that day be a close holiday, then by noon of the first succeeding office day, the sale shall be cancelled, the sum deposited being forfeited to Government, and the lot again put up for sale at the risk of the defaulting purchaser, after issue of advertisement as in the case of original sale.

4th.—The plots of land will be sold revenue-free to the highest bidders.

5th.—The purchasers shall be put in possession on receipt by the Collector of the orders of the Board confirming the sale.

Consecutive lot number.	Name of district.	Pargana and mauza.	Number of mile on which land is situate.	Situated on which side of the railway.	Approximate area of lot in bighas and in acres. B. K. C.	A. R. P.	Land excluded from sale from each lot. Reasons for exclusion.	A. R. P.	Commencement and termination of lot.	Boundary of lot.
1	2	3	4	5	6		7		8	9
1	Monghyr	Indupur, pargana Salemabad.	.....	South of the railway line running from Howrah to Dehli.	3 17 15½	3 1 16·888	.....	.....	From 1 to 4.	*North*—Orchards belonging to Kali Singh, Chulha Dusadh, Muso Singh in Barhi and jote of Jagdeo Singh in relinquished B class land.
2	Ditto ...	Ditto ...	.....	Ditto ...	3 1 4½					*South*—Waste land and relinquished B class lands.
3	Ditto ...	Ditto ...	.....	Ditto ...	0 15 0					*East*—Waste land.
4	Ditto ...	Ditto ...	.....	Ditto ...	3 3 16½					*West*—Railway fencing.
					10 2 16⁷/₈					

Monghyr, the 9th May 1905.

U. GUHA, *for* Collector.

Advertisement of Sale.

NOTICE is hereby given that the undermentioned plots of land, no longer required by Government, situated along the Nirmali Station of the Tirhut State Railway, in the district of Bhagalpur, will be put up to sale at 11 o'clock on the 30th June 1905, corresponding to 13th of Assar Fasli 1312 at Supaul Katchery, district Bhagalpur.

The purchasers of the several plots of land will be subject to the following conditions:—

1st.—The purchasers will have no power to make any excavations on the land nearer than 15 feet from the railway boundary, or to plough the land closer than 3 feet from its foundation.

2nd.—If the amount of purchase-money does not exceed Rs. 100, the whole amount must be paid down at once.

3rd.—If the amount of purchase-money exceed Rs. 100, one-fourth of the amount must be immediately deposited. If the balance be not paid by the noon of the fifteenth day after the sale, reckoning the day of sale as one, or if that day be a close holiday, then by noon of the first succeeding office day, the sale shall be cancelled, the sum deposited being forfeited to Government, and the lot again put up for sale at the risk of the defaulting purchaser, after issue of advertisement, as in the case of original sale.

4th.—The plots of land will be sold revenue-free to the highest bidder.

5th.—The purchasers shall be put in possession on receipt by the Collector of the orders of the Board confirming the sale.

Consecutive lot No.	Name of district.	Pargana and mauza.	Number of mile on which land is situate.	Situated on which side of the railway.	Approximate area of lot in bighas and in acres. B. K. C.	A. R. P.	Land excluded from sale from each lot. Reasons for exclusion.	A. R. P.	Commencement and termination of lot.	Boundary of lot.
45, 46, 47, 48, 49, 50, 51, 52, 53, 54, 55, 56, 57, 58, 59, 60, 61, 62 to 67, 69 to 114, 116 to 121, 125 to 129, 132, 135, 138, 140 and 141.	Bhagalpur	Mauza Nirmali, pargana Naredigar.	67	North ...	44 7 8 (Standard).	14·67 0 0	.....	.....	.....	*North*—Mauza Nirmali. *South*—Land in possession of the railway. *East*—Road to Nirmali. *West*—Mauza Nirmali.

Bhagalpur, the 15th May 1905.

H. COUPLAND, Collector of Bhagalpur.

Advertisement of Sale.

NOTICE is hereby given that the undermentioned plots of land, no longer required by Government, situated along the Hajipur-Katihar Extension Railway, in the district of Monghyr, will be put up to sale at 10 o'clock on 8th day of July 1905, corresponding to the 21st Asarh 1312 Fasli, at Mohanpur, pargana Naipur.

The purchasers of the several plots of land will be subject to the following conditions:—

1st.—The purchasers will have no power to make any excavations on the land nearer than fifteen feet from the railway fencing, or plough the land closer than three feet from its foundation.

2nd.—If the amount of purchase-money does not exceed Rs. 100, the whole amount must be paid down at once.

3rd.—If the amount of purchase-money exceeds Rs. 100, one-fourth of the amount must be immediately deposited. If the balance be not paid by noon of the fifteenth day after the sale, reckoning the day of sale as one, or if that day be a close holiday, then by noon of the first succeeding office day, the sale shall be cancelled, the sum deposited being forfeited to Government, and the lot again put up for sale at the risk of the defaulting purchaser, after issue of advertisement, as in the case of original sale.

4th.—The plots of land will be sold revenue-free to the highest bidders.

5th.—The purchasers shall be put in possession on receipt by the Collector of the orders of the Board confirming the sale.

Consecutive lot No.	Name of district.	Pargana and mauza.	Number of mile on which land is situate.	Situated on which side of the railway.	Approximate area of lot in bighas and in acres.		Land excluded from sale from each lot.		Commencement and termination of lot.	Boundary of lot.
					B. K. C.	A. R. P.	Reasons for exclusion.	A. R. P.		
1	2	3	4	5	6		7		8	9
1	Monghyr	Mohanpur, pargana Naipur.	2 of the Hajipur-Katihar extension.	North ...	0 5 11	.....	.....	.....	From 1 to 3 ...	*North.*—Girja Chaudhry's land. *South.*—Waste land. *East.*—Railway fencing. *West.*—Alkhu Chaudhry's land.
2	Ditto ...	Ditto ...	Ditto ...	Do. ...	0 5 6	.....	.....	.....	.....	*North.*—Girja Chaudhry's land. *South.*—Railway fencing. *East.*—Railway fencing. *West.*—Girja Chaudhry's land
3	Ditto ...	Ditto ...	Ditto ...	Do. ...	0 0 13	.....	.....	.....	.....	*North.*—Girja Chaudhury's land. *South.*—Railway fencing. *East.*—Railway fencing. *West.*—Girja Chaudhury's land.

Monghyr, the 9th May 1905.

UMA PRASANNA GUHA, *for* Collector.

Notice of Sale for Arrears of Revenue.

NOTICE is hereby given, under section 6, Act XI of 1859, Act VII (B.C.) of 1868 and Act II (B.C.) of 1871, that the undermentioned tenures in the Satkania khas mahal, in the district of Chittagong, will be put up to public and unreserved sale at the Collector's office of that district on the 13th day of July 1905 for arrears of rent and cesses remaining unpaid on the 25th May 1905:—

No. of tenure.	Name of tenure with its situation.	Name of proprietor.	Annual jama.		Amount of arrears for which the tenure is to be sold.		
			Rent.	Cesses.	Rent.	Cesses.	Total.
			Rs. A. P.	Rs. A. P.	Rs. A. P.	Rs. A. P.	Rs. A. P.
31/1824	Thana Sathania, at present Banskhali, mauza Nakora, mahal Noabad, bal taluk Rajkumar Roy.	Mahesh Chandra Bhattacharji ...	1,130 0 0	127 0 6	247 2 0	27 10 0	274 12 0
17/490	Thana Ditto, mauza Chambal, mahal Noabad, taluk Tajannissah	Srimati Jabeda Khatoon, herself and on behalf of minor sons, Abdul Karim, Abdool Rahim, Abdul Salim, Abdul Khalem and daughter, Srimati Jannoot Khatoon.	1,954 4 0	161 9 6	732 14 0	60 9 6	793 7 6
5862/4990	Thana Satkania, mauza Satghar, mahal Noabad, taluk Fazar Ali Khan.	Salamat Ali Khan, Srimati Ashraf Bibi.	580 2 0	48 4 0	196 12 9	18 1 3	214 14 0

Chittagong, the 9th June 1905.

F. P. DIXON, Collector.

Notification A.

NOTICE is hereby given, under sections 6 and 13, Act XI of 1859, that the undermentioned estates and shares of estates in the district of Balasore will be put up for sale at the office of the Collector of that district on the 18th day of July 1905, at 12 o'clock noon for arrears of revenue and other demands which by law are realizable as arrears of land revenue.

When in columns 5, 7 and 9 of the appended statement it is stated that only a share is to be sold, it is to be understood that a separate account is kept for that share.

Tauzi No.	Name of mahal and pargana.	Sadar jama of whole estate.	Whether the whole estate is to be sold.	If only a share is to be sold, specification of such share or shares.*	Names of proprietors of property to be sold.	If only a share is to be sold, the sadar jama of such share.	If the whole estate is to be sold, the arrears due from it.	If only a share is to be sold, the arrears due from it.
1	2	3	4	5	6	7	8	9
876	Taluk Purusottampur, pargana Balikhand.	Rs. A. P. 5,636 0 0	Whole ...	.....	Chaudhuri Ram Chandra Nicnkha Mahapatra and others of Purusottampur, pargana Balikhand and others.	Rs. A. P.	Rs. A. P. 140 11 0 1905 April kist.	Rs. A. P.
1600	Kt. taluk Guruprasad, pargana Bayang.	1,416 0 0	Do. ...	.....	Munshi Latifur Rahoman Ahmed and others of Isafpur, pargana Randiaorgara and others.		38 9 6 1905 April kist.	.....
985 Ijmali.	Taluk Birbarpur, pargana Bhera.	2,565 0 0	Share ...	12a. 9p. 16kt. 7b. 1g. 1½ bed.	Radha Charan Mahanti and others of Balimedh, pargana Bheda and others.	1,804 11 4		60 11 6 1905 April kist.
986 Ijmali.	Mal. Damaderpur, pargana Bhera.	2,189 0 0	Do. ...	10a. 4p. 15kt. 12b. 13g. 2k. 3 247 34560 bed.	Chintamoni Nayak and others of Nischintapur, pargana Bheda and others.	1,403 3 10½	.....	16 7½ 1 1905 April kist.
989 Ijmali	Taluk Malda, pargana Dhannagar.	3,420 8 0	Do. ..	13a. 10p. 10kt. 12b. 15g. ...	Chaudhuri Birabhadra, Narindra Mahapatra and others of Kurigan, pargana Dhannagar and others.	2,066 14 10	.....	166 6 7½ 1905 April kist.
1515	Taluk Benotara, pargana Kaima.	1,053 0 0	Whole ...	.....	Pankaja Panda and others, of Samdihi, pargana Dolagram and others.	.....	203 3 11½ 1905 April kist.	.....
1341 6	Mahal Kasba Kamardia, pargana Kamardachaur.	3,865 0 0	Share ...	3a. 7p. 5kt. 15b. 15g. 2k 1kt. 4b. 18g. 1kt. 2b. 7g. 2k. 9b. 7g. 3kt.	Srichandan Bhuyan Brindaban Chandra Rai, of Gad Rentrapur, pargana Sahabander and others.	803 15 5½	.....	403 1 6 1905 April kist.
1344 3	Mal. Kusuda, pargana Kamardachaur.	1,693 0 0	Do. ...	8a.	Srichandan Bhuiyan Brindaban Chandra Rai, of Gad Rentrapur, pargana Sahabander.	846 8 0	.....	423 8 0 1905 April kist.
318	Taluk Napang, pargana Manjuri.	665 12 5	Whole ...	.....	Gopimohan Rai, common Manager of Mahasay Radhakanta Rai and others, of at present Naripur, pargana Randiaorgara.	...	331 11 0 1905 April kist.	.....
3	Taluk Sarmanga, pargana Randiaorgara.	1,429 0 0	Do. ...	.....	Munshi Latifur Rahaman Ahmed of Isafpur, pargana Randiaorgara and others.	...	133 9 0 1905 April kist.	.. ..
1031	Taluk Madhabnagar, pargana Randiaorgara.	1,984 0 0	Share ...	12a. 9p. 13kt. 3b. 17g. 1k. 2kt. 4b. 7g. 1k.	Raghunath Panigrahi and others of Srigunga, pargana Bayang and others.	1,587 12 11	.....	13 4 10½ 1905 April kist.
45 Ijmali.	Ma. Darara, pargana Senaut.	1,304 0 0	Do. ...	10a. 8p.	Jadunath Prasad Do, of Damoderpur, pargana Sunhat, and others.	869 5 4	... ..	434 10 7½ 1905 April kist.
46	Taluk Belna, pargana Senaut.	1,084 0 0	Whole ...	.....	Munshi Latifur Rahaman Ahmed of Isafpur, pargana Randiaorgara and others.	.. .	471 6 8 1905 April kist.	.....
124 Ijmali	Ar. Dograi, ma. Dolsahi, pargana Senaut.	9,880 0 0	Share ...	5a. 11p. 12kt. 1b. 10g. 2k. ...	Ghanasyam Mahapatra of Nawalapur, pargana Bayang and others.	2,461 14 4	.....	738 12 [illegible] 1905 April kist.
131 Ijmali	Taluk Ramkrishnapur, pargana Senaut.	896 0	Do. ...	11a. 1p. 16kt. 3b. 17g. 2k. 1½bed.	Adhikari Sadanand Das of Okra, pargana Senaut and others.	624 7 4	.....	115 8 11 1905 April kist.
1368	Ml. Bistnupur, pargana Sahabander.	3,816 0 0	Whole ...	.....	Srichandan Bhuyan Brindaban Chandra Rai of Gad Rentrapur, pargana Sahabander.	.....	1,908 0 0 1905 April kist.	.. .
682 Ijmali	Taluk Bistnupur, pargana Siary.	1,465 0 0	Share ..	6a.	Prankristna Puthal of Brahmania, pargana Armala and others.	349 6 0	.....	13 3 3 1905 April kist.
150 Ijmali	Tapa Purusanda, pargana Soso.	9,258 0 0	Do. ...	15a. 14kt. 3b.	Balabhadra Prasad Das Rajkumar Bairiganjan Bhuyan Mahapatra of Gopinathpur, killa Mangalpur, pargana Banchas and others.	3,713 9 3	.....	66 3 4½ 1905 April kist.

* All other shares than that specified will be excluded from the sale.

Balasore Collectorate, the 2nd June 1905.

J. CORNES, Offg. Collector.

Advertisement of Sale.

NOTICE is hereby given that the proprietary right of Government, as specified in the conditions of sale below, to the undermentioned estates situate in the district of Jessore will be put up to sale at the sub-divisional head-quarters, Jhenida, on the 18th July 1905, corresponding with the 2nd Sravan 1312 (B.S.).

The purchaser will be subject to the following conditions of sale:—

Conditions of Sale.

1st.—The estate to be sold to the highest bidder above the upset price, which will be fixed by the Collector at the time of sale. The purchaser of these estates will be considered as the proprietor of the estate, and the entire proprietary right of Government in such estate will be transferred to him, subject to the revenue fixed in perpetuity.

2nd.—The sale to be subject to existing leases and to the rights conferred by the settlement proceedings and by the laws in force, and purchasers to be bound to respect the rights of resident cultivators who have signed the schedule of assessment prepared by the Revenue authorities.

3rd.—If the amount of purchase-money do not exceed Rs. 100, the whole amount to be paid down at once.

4th.—If the amount of purchase-money exceed Rs. 100, one-fourth of the amount bid to be immediately deposited. If the balance be not paid by noon of the fifteenth day after the sale, reckoning the day of sale as one, or, if that day be a close holiday, then by noon of the first succeeding office day, the sale is to be cancelled (the sum deposited being forfeited to Government), and the estate to be again put up to sale at the risk of the defaulting purchaser after issue of advertisement, as in the case of original sale.

Number in the district roll.	Name of estate and pargana.	Approximate area in acres.	Government revenue assessed.	REMARKS.
Tauzi No.		A. R. P.	Rs. A. P.	
313(*a*)	Gopalpore	102 2 22	201 15 0	
4126	Ashurhut	13 0 27·7	33 11 2	
4095	Ditto	1 1 38	2 11 6	
3977	Armukhi	0 3 17	1 9 6	
4169	Srifaltola and Bademalanchi ..	30 0 19·53	100 7 0	
3976	Armukhi	2 1 20·16	9 4 0	
3373(*a*)	Khedapara	7 3 39	25 0 0	
3383	Khajurah	51 0 2·88	128 8 9	
3261	Khedapara	2 2 3·84	4 14 6	
3311	Suti-Mamunsia	1 1 11·2	3 8 0	

Jessore Collectorate, the 2nd June 1905.

S. K. AGASTI, Collector.

Advertisement.

NOTICE is hereby given that the proprietary right of Government, as specified in the conditions of sale below to the undermentioned estate, situate in the district of Jessore, will be put up to sale at the Subdivisional head-quarters Bangaon on the 8th July 1905, corresponding with 24th Ashar 1312 (B.S.).

The purchaser will be subject to the following conditions of sale:—

Conditions of Sale.

1st.—The estate to be sold to the highest bidder above the upset price which will be fixed by the Collector at the time of sale. The purchaser of this estate will be considered as the proprietor of the estate, and the entire proprietary right of Government in such estate will be transferred to him, subject to the revenue fixed in perpetuity.

2nd.—The sale to be subject to existing leases and to the rights conferred by the settlement proceedings and by the laws in force, and purchasers to be bound to respect the rights of resident cultivators who have signed the schedule of assessment prepared by the revenue authorities.

3rd.—If the amount of purchase-money do not exceed Rs. 100, the whole to be paid at once.

4th.—If the amount of purchase-money exceed Rs. 100, one-fourth of the amount bid to be immediately deposited. If the balance be not paid by noon of the fifteenth day after the sale, reckoning the day of sale as one, or, if that day be a close holiday, then by noon of the first succeeding office day, the sale is to be cancelled (the sum deposited being forfeited to Government), and the estate to be again put up to sale at the risk of the defaulting purchaser, after issue of advertisement, as in the case of original sale.

Number on the district roll.	Name of estate and pargana.	Approximate area in acres.	Government revenue assessed.	REMARKS.
		A. R. P.	Rs. A. P.	
5344	Hudabishnupur	0 1 18$\frac{8}{11}$	.....	This estate will be sold revenue-free.
5410	Ditto	1 3 11$\frac{111}{121}$	3 1 9.	

Jessore, the 1st June 1905.

S. K. AGASTI, Collector.

Advertisement of Sale.

NOTICE is hereby given that the undermentioned plots of land, no longer required by Government, situated along the Hajipur Branch Railway, in the district of Muzaffarpur, will be put up to sale at 1 o'clock on Friday, the 30th June 1905, corresponding with the 13th Jaith of 1312 Fasli, at Muzaffarpur.

The purchasers of the several plots of land will be subject to the following conditions:—

1st.—The purchasers will have no power to make any excavations on the land nearer than 15 feet from the railway boundary, or to plough the land nearer than 3 feet from the same.

2nd.—If the amount of purchase-money does not exceed Rs. 100, the whole amount must be paid down at once.

3rd.—If the amount of purchase-money exceed Rs. 100, one-fourth of the amount must be immediately deposited. If the balance be not paid by noon of the fifteenth day after the sale, reckoning the day of sale as one, or if that day be a close holiday, then by noon of the first succeeding office day, the sale shall be cancelled, the sum deposited being forfeited to Government, and the lot again put up for sale at the risk of the defaulting purchaser, after issue of advertisement, as in the case of original sale.

4th.—The plots of land will be sold revenue-free to the highest bidders.

5th.—The purchasers shall be put in possession on receipt by the Collector of the orders of the Board confirming the sale.

Consecutive lot No.	Name of district.	Pargana and mauza.	Number of mile on which land is situate.	Situated on which side of the Railway.	Approximate area of lot in bighas and in acres.		Land excluded from sale from each lot		Commencement and termination of lot.	Boundary of lot.
					B. K. C.	A. R. P.	Reasons for exclusion.	A. R. P.		
1	Muzaffarpur.	Chupralodi *alias* Maripore and Bhagwanpore, pargana Besara.	Mile 1 of Hajipur line.	West of the Railway.	0 13 5	0 0 32	.....	.....	.....	*North*—Orchard of Tabarak Hussain. *South*—Public road. *East*—Railway fencing. *West*—Orchard of Kunja Sahu.
2	Ditto ...	Chupralodi *alias* Maripore.	Ditto ...	East of the Railway.	0 4 4	0 0 11·3	.....	.....	.....	*North*—Garden of Mr. Franjy. *South*—Public road. *East*—Garden of Mr. Franjy. *West*—Railway fencing.
3	Ditto ...	Ditto ...	Miles 1 and 2 of Hajipur line.	Ditto ...	0 4 0	0 0 11	.....	.....		*North*—Public road. *South*—Orchard of Safdar Hussain. *East*—Orchard of Abdul Jabar. *West*—Railway fencing.
4	Ditto ...	Ditto ...	Ditto ...	On both sides of the Railway.	2 18 2	0 2 27	This being a part of the District Board road.	0 2 20	.....	

The 17th April 1905.

KALI MOHAN SEN, for Collector.

Notice of Sale for Arrears of Revenue.

NOTICE is hereby given, under section 6, Act XI of 1859, read with Act VII (B.C.) of 1868 and Act II (B.C.) of 1871, that the undermentioned noabad taluks within the Sadar khas mahal, in the district of Chittagong, will be put up to public and unreserved sale at the Collector's office of that district on the 14th day of July 1905 for arrears of rent and cesses remaining unpaid on the 25th day of May 1905:—

Mahal Noabad.

Serial No.	No. of taluk.	Name of taluk with its situation.	Name of proprietor.	Sadar Jama.		Abwab.	
				Rent.	Cesses.	Rent.	Cesses.
				Rs. A. P.	Rs. A. P.	Rs. A. P.	Rs. A. P.
1	883 / 30134	Mauza Bakalia, thana Town, taluk Ahamad Ali.	Mosharaf Ali and others ..	1,395 4 0	236 5 6	474 12 0	77 11 6
2	4757 / 25878	Mauza Juskhola, thana Fatickchari, taluk Earali Khan.	Obedar Rahaman Khan	2,856 4 0	166 13 0	1,421 9 9	129 4 9
3	4758 / 25879	Mauza Juskhola, thana Fatickchari, taluk Obedulla.	Hashmat Ali Khan Chowdhury and others.	1,149 0 0	58 1 0	430 14 0	18 3 6
4	4871 / 30081	Mauza Bhujpur, thana Fatickchari, taluk Earali Khan.	Nipruchaiman Raja	703 8 0	36 13 0	263 10 0	13 13 6
5	1 / 25880	Mauza Hapania, thana Fatickchari, taluk Faradjafar.	Ditto	894 10 6	67 9 6	181 0 0	25 9 0

Chittagong, the 10th June 1905.

J. J. BARNIVILLE, *for* Collector.

Notice of Sale for Arrears of Revenue.

NOTICE is hereby given, under section 6, Act XI of 1859, read with Act VII (B.C.) of 1868 and Act II (B.C.) of 1891, that the undermentioned Noabad taluks within the Cox's Bazar khas mahal, in the district of Chittagong, will be put up to public and unreserved sale at the Collector's office of that district on the 15th July for arrear rent and cess remaining unpaid on the 25th May 1905:—

Number of tenure.	Name of mauza, thana and mahal.	Name of talukdar.	Sadar Jama.		Amount of arrears for which the tenure is to be sold.		
			Rent.	Cess.	Rent.	Cess.	Total.
			Rs. A. P.	Rs. A. P.	Rs. A. P.	Rs. A. P.	Rs. A. P.
1 159/3	Mauza Teknaf, thana Teknaf, mahal Noabad, taluk Fate Chowdhuri.	Khema Chowdhuri, Jhabuke and Adafuroo.	1,374 6 0	52 10 6	254 0 0	17 9 9	271 9 9
3 509/5	Mauza Longurbill, thana Teknaf, mahal Noabad, taluk Thau Chowdhuria.	Ditto ...	798 0 0	36 7 0	198 0 0	12 8 4	210 8 4
4 460/576/580	Mauza Dakhinuhila, thana Teknaf, mahal Noabad, taluk Ishan Chandra Chowdhuri.	Mongjai Chowdhuri and Keojai Chowdhuri.	2,321 6 0	185 8 6	446 8 0	61 13 6	507 13 6
5—1055	Mauza Dakhinuhila, thana Teknaf, mahal Noabad, taluk Srimati Khosmeh, Mangajai and Keojai.	Fate Chowdhuri, Kepchi Chowdhuri, Aunglafa Chowdhuri, Mongjai Chowdhuri, Keojai Chowdhuri, Mongla-furoo Chowdhuri, Ari Chowdhuri, Faturi Chowdhuri, Chailapo Chowdhuri, Khemang Chowdhuri, Mam-furoo Chowdhuri and Laturi.	1,621 8 0	70 15 6	264 0 0	23 11 0	287 11 0
68—92	Mauza Totakkhali, thana Ramoo, mahal Noabad, taluk Jafar Ali.	Srimati Rajiman Khatun	831 4 0	37 6 6	207 13 0	29 2 3	236 15 3
69—94	Mauza Patali Machhuakhali, thana Ramoo, mahal Noabad, taluk Bar Mahammad.	Srimati Jagyeswari, for her minor son, Aerur Chandra Das.	670 10 0	30 5 0	230 10 0	16 13 0	247 7 0
71—99	Mauza Patali Machhuakhali, thana Ramoo, mahal Noabad, taluk Hari Sikdar.	Nyamatali	979 14 0	104 5 6	244 15 6	34 13 6	279 13 0
72—101	Mauza ditto, thana ditto, mahal ditto, taluk Shamdali.	Nur Mahammad	991 2 0	110 6 0	177 10 0	38 13 6	216 7 6
89—121	Mauza Kharulia, thana Ramoo, mahal Noabad, taluk Khayerullah.	Kamala Kanta Sen	676 6 0	69 12 0	253 10 3	23 4 0	276 14 3
119—153	Mauza Nunachhari, thana Ramoo mahal Noabad, taluk Gouri Sankar and Bodya Nath Kanungoe.	Golamberi, Golamkibria, Golamakbar Chowdhuri, Bakia Bibi, Falchum Bibi, Chhambai Bibi and Nargis Bibi.	593 1 0	73 11 6	222 5 9	24 9 3	246 15 0
126—165	Mauza Uttarmithachhari, thana Ramoo, mahal Noabad, taluk Rustumali.	Mahammad Ismail Chowdhuri and Badarduza.	1,071 4 0	124 1 0	401 13 0	40 11 0	442 7 0
193—250	Mauza Bharuakhali, thana Ramoo, mahal Noabad, taluk Mahammad Raja.	Srimati Gol Bahar, Elahadad, Nechhamallah, Srimati Arap Jamal, herself and for her minor sons, Ahasanajjama, Kamaljjama and Manirajjama, and Srimati Golafroz, herself and for her minor sons, Farokahamad, Badar Alam, Faridal Alam, and daughters Jarina Khatun, Fariza Khatun, Nazapa Khatun, Bashara Khatun and Axis Khatun.	1,106 4 0	141 13 6	345 12 0	47 5 0	392 1 0
206-264	Mauza Joarianala, thana Ramoo, mahal Noabad, taluq Golamali.	Aktar Kamal Chowdhuri	673 0 0	86 7 0	504 12 0	57 10 0 Talabana	561 6 0 0 12 0 562 3 0
246 220/240	Mauza Manikpur, thana Chakaria, mahal Noabad, taluq Jhailafuroo.	Srimati Dilendra Kumari	869 0 0	110 6 6	329 4 0	36 13 0	366 1 0
279 274/365	Mauza Bheola Manikchar, thana Chakaria, mahal Noabad, taluq Bibi Isprak.	Asmat Ali and Jaha Rakshu	1,379 8 0	173 0 0	502 6 0	57 15 0	559 5 0
283 281/294	Mauza Khilsadak, thana Chakaria, mahal Noabad, taluq Bibi Isprak	Mrahjan Sikdar	535 8 0	97 15 0	198 6 0	32 10 0	231 0 0
286 283/295/380	Mauza Paharchanda, thana Chakaria, mahal Noabad, taluq Bibi Isprak.	Beni Madhab Sen	1,960 8 0	149 12 6	743 2 0	49 14 10	793 0 10
295 78/518/464/580	Mauza Taitong, thana Chakaria, mahal Noabad, taluq Hari Das Bahaddar, Har Chandra and Nabin Chahdra.	Nezamat Ali Chowdhuri	1,483 14 0	191 6 6	539 9 0	63 13 0	603 6 0
296 289/303	Mauza Rajakhali, thana Chakaria, mahal Noabad, taluq Bibi Isprak.	Nezamat Ali	1,005 10 0	215 12 6	612 14 9	140 5 3	753 4 0
298 290/288/303	Mauza Kolarbil, thana Chakaria, mahal Noabad, taluq Raja Khan.	Akbar Ali Khan	1,044 10 0	109 9 6	391 11 9	36 9 6	428 5 3
299 83/509/496/3499	Mauza Battali, thana Chakaria, mahal Noabad, taluq Hari Das Bahaddar.	Nezamat Ali	503 4 0	44 4 0	186 11 0	14 12 0	201 7 0

The 13th June 1905.

J. J. BARNIVILLE, Collector.

Notice of Sale for Arrears of Revenue.

NOTICE is hereby given, under section 6, Act XI of 1859, read with Act VII (B.C.) of 1868 and Act II (B.C.) of 1871, that the undermentioned noabad taluks within the Patia khas mahal, in the district of Chittagong, will be put up to public and unreserved sale at the Collector's office of that district on the 14th July 1905 for arrears and cesses remaining unpaid on the 25th May 1905 :—

No. of tenure.	Name of mauza, thana, and mahal.	Name of talukdar.	Sadar Jama.		Amount of arrears for which the tenure is to be sold.		
			Rent.	Cesses.	Rent.	Cesses.	Total.
			Rs.	Rs. A. P.	Rs. A.	Rs. A.	Rs. A.
1 / 6749 / 303	Thana Patia, mauza Dhopachari, mahal Noabad taluk Keramat Ali Kamalapru.	Chalafuru Choudhury, son of Bomang Kamalinga Choudhury of Bandaiban.	844	43 9 6	316 8	16 0	332 8
74141 / 19387	Thana Patia, mauza Charichanagar, mahal Noabad taluk Ochman Sadagar and Eakup.	Raj Chandra Sen, son of Ramkishore Sen of Sanharah and Shariutulla Sadagar.	520	14 13 0	195 2	5 9	200 11

Chittagong, the 10th June 1905.

J. J. BARNIVILLE, Covenanted Deputy Collector in charge.

Statement of the Affairs of the Bank of Bengal for the week ending 13th June 1905.

LIABILITIES.

		Rs.	A.	P.
Capital paid up ...		2,00,00,000	0	0
Reserve Fund ...		1,32,00,000	0	0
Public Deposits at Head Office ...	Rs. 96,17,702 9 4	1,98,23,398	4	3
Ditto ditto at Branches	,, 1,02,05,695 10 11			
Other Deposits at Head Office and Branches		10,8 ,60,444	2	9
Bank Post Bills, &c. ...		16,19,948	5	10
Sundries ...		31,[illegible]7,054	14	2
Rupees ...		16,62,40,815	11	0

ASSETS.

		Rs.	A.	P.
Government Securities ...		1,36,99,518	1	11
Other authorised investments ...		76,21,768	13	8
Loans on Government and other authorised securities ...		3,36,86,461	8	8
Accounts of Credit on ditto ditto ...		2,09,70,546	11	10
Bills discounted and purchased ...		3,61,42,488	9	4
Balances with other Banks ...		12,31,208	12	10
Bullion ...		..		
Dead Stock ...		18,52,491	3	8
Stamps ...		17,682	2	0
Sundries ...		12,49,437	14	3
		11,64,66,603	14	2
Cash and Currency Notes at Head Office* ...	Rs. 2,66,39,127 2 7	4,97,74,241	12	10
Cash and Currency Notes at Branches†	,, 2,31,35,114 10 3			
Rupees ...		16,62,40,845	11	0

* Includes Sovs. & ½ Sovs., value	Rs.	2,09,485	0 0
† Do. do. do.	,,	1,79,992	8 0
	Rs.	3,8[illegible],477	8 0

By order of the Directors,
W. D CRUICKSHANK,
Secretary and Treasurer.

E. DICKINSON,
Chief Accountant

Rate for Demand Loans 4 per cent.
Percentage 37 41.

BANK OF BENGAL,
Calcutta, 15th June 1905

(700—1)

Statement of Government Promissory Notes enfaced for payment of Interest in London, under deduction of amount retransferred to India, and outstanding in the books of the Bank of Bengal on the 15th June 1905.

PARTICULARS.	3 per cent. of 1896-97.	3½ PER CENT. LOANS—							4 PER CENT. LOANS—							4½ PER CENT. LOANS—				GRAND TOTAL.
		Of 1848-49.	Of 1854-55.	Of 1865.	Of 1879.	Of 1893-94.	Of 1900-01.	Total.	Of 1832-33.	Of 1835-36.	Of 1842-43.	Of 1854-55.	Transfer of 1865.	Reduced 4 per cent. loan of 1879.	Total.	Of 1879.		Transfer loan of 1879, 4½ per cent. portion.	Total.	
Balance of 31st May 1905 ...	93,58,000	1,62,41,500	10,75,09,700	2,24,24,900	1,24,26,300	.....	20,55,200	16,00,57,600	6,933	5,000	.....	3,500	40,800	2,500	58,733	5,000	...	29,500	34,500	17,01,03,833
ADD—																				
Amount of transferred to in London	.....	.....	.....	.....	.....	.....	.....	.....	.....	.....	.....	.....	.....	.....	.....	.....	...	.....	.....	.....
Amount enfaced at Madras up to 7th June 1905 ...	50,000	.....	.....	.....	.....	.....	.....	.....	.....	.....	.....	.....	.....	.....	.....	.....	...	.....	.....	50,000
Amount enfaced at Bombay up to 10th June 1905	.....	.....	1,500	3,000	.....	.....	.....	4,500	.....	.....	.....	.....	.....	.....	.....	.....	...	.....	.....	4,500
Amount enfaced at Calcutta between 1st and 15th June 1905	.....	.....	1,25,000	3,000	.....	.....	.....	1,28,000	.....	.....	.....	.....	.....	.....	.....	.....	...	.....	.....	1,28,000
	94,08,000	1,62,41,500	10,76,26,200	2,24,30,900	1,24,26,300	.....	20,55,200	16,02,90,100	6,933	5,000	.....	3,500	40,800	2,500	58,733	5,000	...	29,500	34,500	17,02,91,333
DEDUCT—																				
Amount written off in the London registers ...	.....	2,700	9,85,000	1,71,000	21,900	.....	.....	11,79,700	.....	.....	.....	.....	.....	.....	.....	.....	...	.....	.....	11,79,700
Balance on 15th June 1905	94,08,000	1,62,38,800	10,66,41,200	2,22,59,900	1,24,05,300	.....	20,55,200	15,96,10,400	6,933	5,000	.....	3,500	40,800	2,500	58,733	5,000	...	29,500	34,500	16,91,11,633

NOTE.—From 9th June 1857 to 15th April 1905—Enfaced from India, 11,382 lakhs; retransferred from London, 11,028 lakhs.
" 16th April 1905 " 30th " " " " " 5 " " " " " —
" 1st May " " 15th May " " " " " 3 " " " " " 3 lakhs.
" 16th " " " 31st " " " " " 4 " " " " " —
" 1st June " " 15th June " " " " " 2 " " " " " 12 lakhs.
11,393 " 11,053 "
11,053 "
Balance against India 340 "

J. GRAVES,
Offg. Superintendent.

W. D. CRUICKSHANK,
Secretary and Treasurer.

(707—1)

PUBLIC DEBT OFFICE, BANK OF BENGAL,
Calcutta, the 17th June 1905.

MILITARY ACCOUNTS DEPARTMENT.

Statement of Unclaimed Sums deposited with the Bengal Military Orphan Society in trust for Soldiers' Children, exclusive of those of minors who have not attained the age of 21.

Date of Deposit.	Name and Rank of Father.	Corps.	Names of Children.	Amount. Rs.	A.	P.
Prior to 1842	Collins, ——, Sergeant ...	.....	Two children ...	157	14	1
,,	Lee, E., Corporal	.....	Two children ...	111	9	0
,,	Smith, Henry, Sergeant ...	.....	Elizabeth	828	0	0
,,	Smith, D., Sergeant-Major ...	.....	Margaret	78	6	5
,,	Story, ——, Sergeant ...	.....	Thomas	117	5	4
,,	MacConnell, Sergeant ...	.....	John	77	15	3
,,	Rutherford, Sergeant ...	.....	Margaret	138	10	8
,,	Hewetson, William, Gunner ...	.....	John	47	5	7
,,	Taylor, John, Private ...	.....	John	214	11	11
,,	Conroy, Peter, Corporal ...	.....	Thomas	274	14	6
,,	McCullum, ——, Conductor ...	.....	John	364	6	10
,,	Gordon, James	59th Foot	James	589	2	2
,,	Casey, Jeremiah	87th Foot	Daniel	109	12	4
,,	Corbolly, Thomas, Private ...	59th Foot	Samuel	62	12	3
,,	Cassidy, ——, Corporal ..	.....	John	61	3	9
,,	Hyde, Henry, Conductor ...	.....	Thomas	187	1	10
,,	Hodgkinson, E., Troop Sergeant-Major.	11th Dragoons ...	William	64	8	0
,,	Anderson, William, Corporal ...	H. C. 1st Bn. Regt. ...	Mary Anne Margaret ...	124	11	6
,,	White, W., Private ...	3rd Buffs	George and Mary Anne	13	13	9
,,	Minogue, T., Private ..	3rd Buffs	Thomas	29	11	0
,,	Tailor, John, Bombardier ...	.....	Elizabeth	43	0	0
,,	Neal, James, Private ...	59th Foot	James	43	0	0
,,	Sherrock, J., Corporal ...	.....	Joseph	160	0	0
,,	Moore, Bombardier ...	.....	Dorothy	5	9	5
,,	Lawson, Henry, Laboratory Sergeant.	.....	George	11	8	2
,,	Creighton, James, Corporal ...	13th L. Infy. ...	Mary Ann	16	13	0
,,	McCoy, ——, Sub-Conductor ...	.....	John and George ...	958	3	2
,,	Long, R., Sergeant ...	Allahabad Magazine Establishment.	Ann and Robert D. ...	137	3	9
,,	Baker, H., Gunner ...	4th Co., 3rd Bn. Arty. ...	James	32	1	4
,,	Hills, ——, Gunner ...	1st Co., 3rd Bn. Arty. ...	Sophia	30	1	1
,,	Burns, James, Gunner ...	Artillery	Hannah	10	5	0
,,	McKenney, R., Bombardier ...	1st Co., 4th Bn. Arty. ...	Ann Eliza	134	6	5
,,	Smith, J., Gunner ...	1st Co., 2nd Bn. Arty. ...	Margaret	6	6	5
,,	Byrne, F., Hospital Sergeant ...	2nd Bn., Arty. ...	Charles	123	13	4
,,	Flynn, J., Gunner ...	3rd Troop, 1st Bde., H. Arty.	Elizabeth	0	1	4
,,	Fagan, J., Gunner ...	1st Co., 3rd Bn. Arty. ...	Mary and James ...	11	12	9
,,	Johnson, C., Gunner ...	1st Co., 5th Bn. Arty. ...	William	3	0	6
,,	Twoomey, M., Gunner ...	4th Co., 3rd Bn. Arty. ...	Michael, William, and Margaret.	21	2	11
,,	Ahern, William, Gunner ...	4th Co., 2nd Bn. Arty. ...	John	65	11	9
,,	McCormick, J., Gunner ...	4th Co., 2nd Bn. Arty. ...	Bernard	116	10	9
,,	Gavin, J., Gunner ...	2nd Co., 3rd Bn. Arty. ...	Thomas and James ...	189	3	6
,,	Bryan, D. Sergeant ...	.....	Mortimer	12	10	11
,,	Reid, ——, Sergeant ...	Sappers and Miners ...	Eleanor and Eunice ...	68	6	5
,,	South, John, Sergeant ...	.....	Elizabeth and Martha ...	310	0	0
,,	Cunningham, Mathew, Private	44th Foot	Michael	37	14	8
,,	Blyth, John, Conductor ...	.....	Children (names not recorded).	12	12	3
,,	Smith, T., Sergeant ...	.....	Esther and Amelia ...	23	15	0
,,	Pierce, Qr.-Mr. Sergeant ...	20th N. I.	Thomas	711	15	2
,,	Driver, J., Sergeant-Major ...	.....	Robert Charles and John.	141	7	1
,,	Davis, D., Farrier Sergeant ...	4th Troop, 1st Bde., H. Arty.	Thomas	23	15	2
,,	Canty, John, Bombardier ...	3rd Co., 4th Bn. Arty. ...	John (died 11th May 1842).	272	2	8
June 29, 1853	(Not recorded)	.....	Bryon, Margaret, and William.	53	8	3
,, 29, 1849	(Not recorded)	.....	Daly, Robert ...	23	9	1
Mar. 24, 1843	Nowlon, L., Farrier Sergeant ...	4th Troop, 2nd B. H. A.	Ellen	112	9	0
Apl. 3, 1843	Farrel, James, Gunner ...	2nd Co., 5th Bn. Arty. ...	Charlotte	4	2	8
,, 3, 1843	Roach, Edward, Private ...	1st En. Lt. Infy. ...	David and Austel ...	7	13	8
Mar. 9, 1843	Shiehan, B., Gunner ...	3rd Co., 3rd Bn. Arty. ...	John and Patrick ...	2	1	8
June 21, 1844	Evans, George, Sergeant ...	1st Co., 2nd Bn. Arty. ...	Mary Ann and Catherine.	19	14	9
Sept. 19, 1844	Andrews, ——, Private ...	44th Foot	George	200	0	0
Oct. 30, 1857	Ward, J., Gunner ..	O. Batty., 3rd Bde., R. A.	Julia	277	11	11
Dec. 31, 1887	Bunn, T., Gunner	G. Batty., B. Bde., R. H. A.	William Thomas ...	63	9	8
			James John ...	63	9	8
Mar. 29, 1888	Oxford, W., Private ...	2nd Royal Lanc. Regt.	A. L and A. ...	30	6	5
Nov. 16, 1844	Gale, ——, Private ...	10th Foot	John Thomas ...	28	12	0
,, 26, 1844	Sullivan, John, Bombardier ...	1st Co., 2nd Bn. Arty. ...	John	180	0	0
Jan. 6, 1845	Monaghan, Michael, Sergeant ..	1st Co., 2nd Bn. Arty. ...	James	156	12	5

Date of Deposit.	Name and Rank of Father.	Corps.	Names of Children.	Amount.
				Rs. A. P.
Jan. 15, 1845	Godfrey, ——, Sergeant-Major...	.....	Harriett M. and James...	81 14 1
Feb. 14, 1845	Fry, ——, Bugle-Major ...	6th Bn. of Arty. ...	James	12 6 9
„ 3, 1842	Wilson „ ...	.. ...	Sophia, Thomas, and Elizabeth.	204 7 8
„ ... 1842	McCarthy, Qr.-Mr. Sergeant ...	... ..	John	61 2 3
„ 14, 1845	Hannoo, J., Drummer ...	68th Regt., N. Infy. .	Mary	28 8 3
July 7, 1845	Hay, A., Sergeant-Major ...	.....	Thomas	101 6 4
„ 9, 1845	Meaney, John, Sergeant Major	2nd Bde., H. Arty.	Henry and James ...	292 15 8
„ 9, 1845	Murphy, Thomas, Bombardier	2nd Troop, 3rd Bde., H. Arty.	Ellen	77 4 11
„ 9, 1845	Fate, William, Staff Sergeant ...	4th Co., 15th Bn of Arty.	Catherine Ann... ...	167 15 5
„ 9, 1845	Paley, Owen, Gunner ...	3rd Co., 5th Bn. of Arty.	Owen	7 1 7
Sept. 1, 1845	Ryan, ——, Sergeant ...	.. ...	Julia B. and George J.	120 13 0
Aug. 8, 1846	McEnerney, Thomas, Sub-Conductor.	.....	Hannah	152 0 9
.....	Glasscan, John Corporal ...	.....	Ellen Sarah ...	66 10 2
.....	Ridley, Henry, Gunner ...	.....	Henry	31 9 3
Oct. 16, 1846	Lewis, Thomas, Gunner ..	Arty	Thomas	20 5 3
July 6, 1847	Dobbins, Francis, Gunner ...	.....	Martha	83 3 6
„ 19, 1847	Lunn, Adam, Farrier ...	.....	Adam T. and John ...	79 14 0
„ 19, 1847	Clarke, William, Bombardier ...	1st Troop, 3rd Bde., H. Arty	Not recorded ...	104 10 3
„ 19, 1847	Prince, W., Sergeant ..	1st Troop, 1st Bde., H. Arty.	Ditto	125 15 10
Jan. 11, 1848	Byrnes, ——, Corporal ...	.....	Maria	59 0 0
July 6, 1848	Braithwaite, W., Staff Sergeant	.. ...	C. William and William H.	148 3 6
Oct. 16, 1848	Butcher, H., Sergeant-Major ...	Sirmoor Bn. ...	Johannah, Frederick and David Edwin ...	99 6 1
May 9, 1849	Sheehan, D., Private ...	2nd En. Regt. ...	James	36 5 6
June 2, 1849	Moore, Benjamin, Private ...	1st En. B. F. ...	Sarah C.	9 8 4
„ 2, 1849	Crowley, Charles, Private ...	1st En. B. F. ...	John	7 6 1
Oct. 12, 1849	Deare, W., Conductor ...	.....	Emeline	50 0 0
Nov. 21, 1849	Moget, ——, Sergeant Major ...	.....	George	69 14 4
Feb. 18, 1850	Boote, Daniel, Gunner ...	1st Co., 4th Bn. of Arty.	James and another ...	26 3 6
June 29, 1850	Uniack, Patrick, Sergeant ...	1st Co., 3rd Bn. of Arty.	John and another ...	29 15 0
Aug. 19, 1850	Sheehan, P., Gunner ...	Arty.	Patrick	23 5 6
Oct. 29, 1850	Lees, James, Corporal ...	2nd En. Regt. ...	Elizabeth	25 14 6
Nov. 4, 1852	Hodgins, Adam, Gunner ...	2nd Co., 5th Bn. of Arty.	William	9 11 11
Feb. 1, 1853	Edwards, Michael, Sergeant ...	2nd Co., 5th Bn. of Arty.	Jane and Bridget ...	36 5 9
Apl. 21, 1853	Staples, Edward, Sergeant ...	Sappers and Miners ...	E. W. H.	97 2 6
Sept. 13, 1853	Brown, Michael, Sergeant ...	Arracan Bn. ...	John	49 10 3
Jan. 24, 1854	Galway, Robert, Bombardier .	1st Co., 3rd Bn. of Arty	William	206 1 2
„ 18, 1855	Munrowd, George, Sub-Conductor.	Ordnance Dept. ...	Georgiana	61 10 3
Sept. 24, 1855	Franks, G., Bazar Sergeant ...	.....	Mary Harriet ...	283 1 11
Oct. 15, 1857	Earle, Edward, Sergeant ...	Calcutta Town Guard ...	William Edward ...	209 14 0
Dec. 4, 1860	MacDonnel, John, Private ...	97th Foot	Charles	25 15 6
June ... 1862	Keddie, J., Private ...	2nd En. B. F. ...	Jane and James ...	86 0 0
July 22, 1863	Lawton, William, Color-Sergeant	24th Foot	William and Joseph ...	1:2 14 2
Jan. 20, 1864	Jones, John, Gunner ...	G. Battery, 22nd Bde., Royal Arty.	Henrietta Dalzell ...	30 5 10
Mar. 10, 1864 / May 19, 1864	Anderson, William, Gunner ...	5th Bn., 25th Bde., Royal Arty.	Duncan	35 4 11
July 18, 1865	Rowland, J., Private ...	2nd Dragoon Guards ...	Sophia M. and Elizabeth Ann.	8 0 0
June 25, 1866	Mead, William, Bombardier .	4-25th Royal Arty. ...	Mary and Thomas ...	4 0 0
Oct. 9, 1871	York, R., Sergeant ...	Arty.	Henry J.	21 1 4
May 8, 1884	Claydon, Daniel, Color-Sergeant	2nd Lanc. Fus. ...	Thomas Patrick ...	60 0 0
July 6, 1887 / June 2, 1888 and Sept. 7, 1888	Simons, J., Lance-Corporal ...	2nd Bn., The Queen's Royal West Surrey Regt.	Annie Isabella and John Thomas.	353 14 0
Apl. 11, 1889	Hyland, M., Drummer ...	2nd Bn., The Queen's Royal West Surrey Regt.	Patrick, Emily, Matilda, and Rosanna.	559 9 5

Application for payment of the deposits should be made to the Pay Examiner, Bengal Command, Calcutta.

JOHN C. C. PERKINS, *Captain*,

Pay Examiner, Eastern Command, and ex-officio
Secretary, Military Orphan Schools.

PAY EXAMINER'S OFFICE, EASTERN COMMAND;
Calcutta, the 9th June 1905.

NOTIFICATION.

Corporation of Calcutta.

IN compliance with the provisions of section 565 of the Calcutta Municipal Act [Act III (B.C.) of 1899], it is hereby declared that the General Committee of the Corporation of Calcutta have, in exercise of the powers conferred on them by section 559 of the same Act, framed the following bye-laws and will submit them to the Corporation for consideration.

Any person having any objection to the proposed bye-laws should submit it in writing to the Chairman of the Corporation on or before the 22nd July 1905:—

Bye-laws under section 559 (45).

1. The area to be used for graves in every burial-ground shall be divided into grave-spaces which shall be serially numbered so that the position of each grave-space may be readily ascertained. A corresponding map or maps of the burial-ground shall be constantly kept at some convenient place on or near the burial-ground, and shall be open to the inspection of all persons. On such map or maps every grave-space shall be delineated with its number inscribed thereon. A book shall also be kept with such map or maps in which all interments made in the aforesaid grave-spaces and their dates shall be entered.

2. Each grave-space shall be not less than 9 feet by 6 feet in superficial dimension, and every grave shall be constructed so as to leave a space of at least one foot on all sides between the same and the nearest boundary of the grave-space.

3. Each grave shall, for the first interment therein, be constructed of a perpendicular depth of not less than 7 feet, except in Muhammadan cemeteries, where the minimum depth shall be 5 feet.

A measuring rod shall be kept in each cemetery on which shall be legibly marked the perpendicular depth herein prescribed, and it shall be incumbent on every person having control or being in charge of a cemetery to satisfy himself by the use of such rod that prior to any interment being made therein each grave is of the prescribed depth.

4. Any person having the control or being in charge of a cemetery who shall be guilty of a breach of any of the provisions of the foregoing bye-laws shall be liable to a fine which may extend to Rs. 20.

Bye-laws under section 559 (46).

(1) Subject to the provisions of any existing pottah or lease, no grave shall be reopened until after the expiry of eight years from the last interment therein except in order to inter therein another member of the same family, in which case a layer of earth shall be left undisturbed above the last previously interred remains of not less than 6 inches in depth, if such remains were enclosed in a coffin, and of not less than 1 foot in depth, if such remains were not so enclosed; provided also that no soil shall be disturbed which on reopening any grave shall be found to be offensive. In no case shall any human remains be removed from a grave, save in the manner and subject to the conditions prescribed in bye-law 1 under section 559 (48).

(2) Every interment after the first interment shall be made in such manner that the interred remains shall rest at a depth below the ordinary level of the surrounding ground of not less than 3 feet 6 inches when such remains are enclosed in a coffin, and of not less than four feet when such remains are not so enclosed.

(3) Any person having the control or being in charge of a cemetery who shall be guilty of a breach of any of the provisions of the foregoing bye-laws shall be liable to a fine which may extend to Rs. 20.

Bye-laws under section 559 (48).

1. Subject to the provisions of section 176, Code of Criminal Procedure, no human remains shall be exhumed within eight years of interment without the consent of the Chairman of the Corporation unless such remains shall originally have been interred enclosed in a metal coffin of a pattern approved by the Health Officer of the Corporation. Every person in charge of any exhumation shall conduct the process in such manner that no avoidable nuisance or danger to health shall be caused thereby.

Proviso.—Human remains hermetically sealed in a metal coffin of approved pattern, may, with the permission of the Chairman of the Corporation, be kept for any period before transportation to another place, in some place to be approved of by the Chairman.

2. No person shall dispose of or cause to be disposed of a corpse which has been kept and used for purposes of dissection or medico-legal examination at any place except a burial or burning ground appointed for the purpose by the Chairman of the Corporation and at any time except between the hours of sunset and sunrise.

3. Every Sub-Registrar shall cause all clothes, bedding, mats, etc., brought to a burial-ground or burning ghât with a corpse and not enclosed in a coffin or not removed from the burial-ground or burning-ghât after the burial or burning has been completed to be burnt.

4. Any person having the control or being in charge of a cemetery or a burning ghât who shall be guilty of a breach of any of the provisions of the foregoing bye-laws shall be liable to a fine which may extend to Rs. 20, and in the case of a continuing breach of any such provisions to a further fine which may extend to Rs. 10, for every day during which the breach continues after conviction for the first breach.

MUNICIPAL OFFICE,
The 14th June 1905.

FRED. GAINSFORD,
Secretary to the Corporation.
(709—1)

In the Court of the District Judge of Rajshahi.

EXECUTION CASE No. 3 OF 1903 (MONEY).

Raja Promoda Nath Roy, decree-holder, *versus* Sara Khatun and others, judgment-debtors.

NOTICE is hereby given that the undermentioned property of the judgment-debtors will be sold in execution of the above decree at public sale in the Court premises by the Nazir of the District Judge of Rajshahi, on the 15th July 1905 at 12-30 P.M., for the realisation of Rs. 23,798-7 only:—

3 annas 15 gandas 1 kara 1 kranti 8 danti share of Debikhalabaria, pargana Bhatia, tappe Chapaila, station and sub-registry Nator, bearing tauzi No. 432 of the Rajshahi Collectorate. Revenue payable for entire mahal is Rs. 2,944-6 (including police).

The property is subject to an encumbrance of Rs. 6,826-8-6.

S. N. HUDA, District Judge.

Judge's Court, Rajshahi, the 16th June 1905.

(705—1)

Holta Tea Company, Limited.

NOTICE is hereby given that at an Extraordinary General Meeting of the Shareholders of the Holta Tea Company, Limited, held at the Registered Office of the Company, No. 20 Strand Road, Calcutta, on the twenty-ninth day of May 1905, the following extraordinary resolutions were passed:—

1. That it has been proved to the satisfaction of the meeting that the Company cannot, by reason of its liabilities and inability to arrange finance, continue its business, and that it is advisable to wind up the same and accordingly that the Company be wound up voluntarily.

2. That Mr G. Kingsley and Mr. S. Jameson be and hereby are appointed to be Liquidators of the Holta Tea Company, Limited, with joint and several powers for the purposes of the winding up of such Company.

SHAW, WALLACE & Co.,
Agents and Secretaries.

Calcutta, the 29th May 1905. (650—2—414)

NOTICE TO CREDITORS.

In the Goods of Elizabeth Steer Onsow deceased.

NOTICE is hereby given that Letters of Administration with copy Will and two codicils annexed to the property and credits of the deceased above named having, on the 4th day of May 1905, been granted to Frederick Henry Eggar, all creditors and other persons having any claim against the estate of the abovenamed deceased are hereby required to send in writing the particulars thereof to the undersigned on or before the 1st day of July 1905 after which date the assets of the estate of the said deceased will be distributed by Frederick Henry Eggar, the Administrator, amongst the parties entitled thereto having regard to the claims of which he has then had notice. And notice is hereby further given that the said Frederick Henry Eggar will not be liable for the assets or any part thereof so distributed to any person of whose claim he shall not have had notice at the time of such distribution such notice to be sent to the undersigned.

Dated this 29th day of May 1905.

THOS. H. WESTMACOTT,
30-2 Dalhousie Square,
Attorney for Frederick Henry Eggar, Administrator to the Estate of the deceased.

(610—3—395)

Lost.

THE Government Promissory Note No 109883 of the 3½ per cent. loan of 1895 for Rs. 5,000, originally standing in the name of Rajoballa Dabee, and last endorsed to Hrishikesh Chatterjee, the proprietor, by whom it was never endorsed to any other person, having been lost, notice is hereby given that payment of the above note and the interest thereupon have been stopped at the Public Debt Office, Bank of Bengal, Calcutta, and that application is about to be made for the issue of duplicate in favour of the proprietor. The public are cautioned against purchasing or otherwise dealing with the abovementioned security.

Name of the advertiser—HRISHIKESH CHATTERJI.
Residence—Kanchrapara, district Nuddia.

(649—3—396)

Lost or Stolen.

THE Government Promissory Notes Nos. 026356, 026357 and 026358 of the 3 per cent. loan of 1896-97 for Rs. 100 each, originally standing in the name of Shamapodo Sreemany and last endorsed to Nalin Chunder Mookerjee (since deceased), the proprietor, by whom they were never endorsed to any other person, having been lost or stolen, notice is hereby given that payment of the above notes and the interest thereupon have been stopped at the Public Debt Office, Bank of Bengal, Calcutta, and that application is about to be made for the issue of duplicates in favour of the administrator. The public are cautioned against purchasing or otherwise dealing with the above-mentioned securities.

T. H. WILSON & Co.,
Attorneys for Babu Bhola Nath Roy, Administrator, Estate, Nalin Chunder Mookerjee, deceased

6, Old Post Office Street, Calcutta. (659—3—417)

Wanted

AN Overseer for the Sadar subdivision of the District Board, Khulna, on Rs. 60—4—80, *plus* travelling allowance, Rs. 37-8 per month.

A plucked B.E. strong in estimating and road projects is required. Apply on or before the 25th June 1905 to

H. D. CHATTERJEE, District Engineer.

Khulna, the 1st June 1905. (662—3)

Wanted

TWO B.Sc.'s, one for the post of the Science Teacher of the Rangpur Zillah School and the other for the post of a Teacher of Mathematics and Science in the Ranchi Industrial School, each on a salary of Rs. 50 (fifty rupees) a month, outside the list of the Subordinate Educational Service.

Applications will be received up to the 24th June 1905.

HARI DAS BANERJEE, Personal Asst.,
for Director of Public Instruction, Bengal.

Calcutta, the 3rd June 1905.

Wanted

A HEAD MASTER AND A THIRD MASTER for the Barh Bayley H. E. School on a monthly salary of Rs. 60 and Rs. 30 respectively. The selected candidates will have to stick to the posts for one year at least. Applications will be received by the undersigned up to the 5th of July 1905.

JYOTISH CHANDRA SEN,
Secretary, Barh H. E. School.

Patna, P. O. Barh, the 10th June 1905. (692 - 3)

Wanted

AN Overseer for the Comilla Municipality on a salary of Rs. 50 and horse allowance Rs. 15 per month on probation for 11 months. Candidates must submit their application with copies of testimonials on or before 2nd July 1905. The selected candidate shall have to give cash security of Rs. 500. Applicants to state age and submit certificates of riding and physical activity.

He must be qualified under rule 7 (2) of Part IX.

(ILLEGIBLE), Chairman, Comilla Municipality.

The 15th June 1905. (702—2)

Notice.

WANTED at once a Treasurer for the first-class Treasury at Cuttack.

The pay of the appointment is Rs. 80 per month, and cash security of Rs. 15,000 is required. There is a prospect of the pay being raised to Rs. 100 per month if additional security of Rs. 5,000 is furnished.

Applications will be received up to the 7th July next by the Collector.

W. F. C. MONTRIOU, Deputy Collector in charge, *for* Collector.

Cuttack Collectorate, the 16th June 1905. (703—3)

WANTED an experienced Correspondence Clerk for the District Engineer's Office, Saran, on a salary of Rs. 50 per month, rising to Rs. 65 by biennial increment of Rs. 2. None need apply who has not occupied a similar post.

Applications in applicant's own handwriting will be received by the undersigned up to 1st July 1905.

E. J. BULL, District Engineer, Saran.

Chapra, the 17th June 1905. (706—2)

WANTED at once for the Chella Charitable Dispensary a qualified Native Doctor on a salary of Rs. 30 a month. Chella is nearly seven miles from the Bolpur Railway Station.

The applications will be received by the Civil Surgeon up to 30th June 1905.

C. C. SINHA, Secretary, Chella Dispensary, Birbhum.

Birbhum District Board's Office, dated Suri, the 13th June 1905.

(708—2)

WANTED four Duftaries for the Hooghly Collectorate and Magistracy on a salary of Rs. 8 to Rs. 9 according to qualifications. None need apply who is not thoroughly experienced in binding books and registers, in dusting and arranging rooms, and looking after pens, ink, paper, etc. Applications will be received by the undersigned up to the 10th July 1905.

S. K. GHOSE, *for* Collector, Hooghly.

Hooghly Collectorate, the 17th June 1905. (730—3)

Notice.

WANTED a Peshkar on Rs. 30 per month for the Settlement Office for a period of about six months. Preference will be given to a candidate having previous experience of the work of Settlement Office Applications will be received by the undersigned till the 6th July 1905.

KALI PROSAD CHATTERJEE, Settlement Officer.

Bogra, Settlement Office, the 19th June 1905.

(731—3)

Notice.

NOTICE is hereby given that the Transfer Books of the Bank will be closed from Saturday, the 1st till Saturday, the 15th, proximo, both days inclusive.

By order of the Directors,

W. D. CRUICKSHANK,
Secretary and Treasurer.

Calcutta, the 13th June 1905. (697—1)

In the matter of an application under the Indian Electricity Act, 1903, by the Calcutta Tramways Company Limited, for a license for the supply of electrical energy for the working of a Tramway within the Municipal area of Howrah, and for the erection and construction of the works necessary for the carrying out of such purpose.

EVERY local authority, company, or person desirous of making any representation to the Government of Bengal or of bringing before it any objection respecting the above application may do so by letter addressed to the Secretary to the Government of Bengal in the Public Works Department within two months of the 14th day of June 1905.

1. The applicants for this license are the Calcutta Tramways Company, Limited, of No. 1, Queen Victoria Street, in the City of London, and of No. 1, Corporation Street, Calcutta, a Joint-Stock Company, incorporated with Limited Liability under the English Companies Acts, and carry on the business of a Tramway Company in Calcutta and its suburbs.

2. It is proposed to supply electrical energy for the working of tramcars which will run over the following routes:—

Route A.—Starting from Grierson Road (Hooghly Floating Bridge) *vid* Dobson's Road, Golabaree Road, Grand Trunk Road and Hurrogunge Road to a terminus at the southern end of the Ghoosery Road.

Route B.—Starting from Grierson Road (Hooghly Floating Bridge) *vid* Dobson's Road, Golabaree Road East, and Howrah Road to the southern end of the Ghoosery Road.

Route C.—Starting from Grierson Road (Hooghly Floating Bridge) *vid* Buckland Bridge Road, Maidan Road and Grand Trunk Road to a terminus at Kaurapara Ghat Road.

Route D.—Starting from Kaurapara Ghat Road along Grand Trunk Road, joining Route A to Golabaree Road, and proceeding, if necessary, along Hurrogunge Road to the terminus of Route A.

3. General description of works and system of supply:—

(*a*) The purpose for which the supply is to be given is electric traction.

(*b*) *System of Distribution.*—Three-phase current at a pressure of 6,600 volts to be transmitted at a frequency of 25 cycles per second from the Power Station of the applicants located on the Lower Circular Road, Calcutta, to a sub-station located in Howrah by means of special duplicate 3-core high tension cables laid underground. In the sub-station the high tension alternating current will be transformed to continuous current at a pressure of 550 volts by means of static transformers and rotary convertors. This continuous current will be distributed to various points along the system by means of underground cables, where they will feed into the overhead trolley wires from which the Motor Cars will derive the necessary current.

(*c*) Both the high tension transmission mains and the low tension distributing mains will be laid in earthenware troughings filled with pitch, and in the case of the former a separate trough will be provided for each. Duplicate high tension submarine cables will be laid under the Hooghly River to join the Calcutta mains with those of Howrah.

4. The following is a list of streets where it is intended to lay down cables and overhead wires:—

Underground cables.	*Overhead wires.*
(Provided sub-station is near junction of Dobson's and Grierson Roads.)	
Grierson Road.	Grierson Road.
Dobson's Road.	Dobson's Road.
Golabaree Road.	Golabaree Road.
Howrah Road.	Howrah Road.
Grand Trunk Road.	Bandu Ghat Road.
Chandmari.	Ghoosery Road.
New Street.	Road joining Ghoosery and Bandu Ghat Road.
Tindal Garden Road.	Hurrogunge Road.
Buckland Bridge Road.	Grand Trunk Road.
Howrah Station Road.	Kaurapara Ghat Road.
	Road to ditto from Grand Trunk Road.
	Maidan Road.
	Buckland Bridge Road.
	Howrah Station Road.

5. It is desired to cross and for such purpose to open and break up the soil of the East Indian Railway Co. and the Howrah-Amta Light Railway Co, Ld., at the following places, that is to say, at the level crossings in Dobson's Road, Maidan Road and Grand Trunk Road.

6. A copy of the map of the district showing the boundaries of the area of supply and the streets and other places over or along which it is proposed to place electric-supply lines is deposited for public inspection with the Secretary to the Municipal Commissioners of Howrah and likewise with the applicants, the Calcutta Tramways Company, Limited, whose office is at No. 1, Corporation Street, Calcutta.

7. Copies of the Draft License and of the License when granted may be obtained at the office of the Calcutta Tramways Company, Limited, No. 1, Corporation Street, Calcutta, at a price of Re. 1 per copy.

(698—1)

In the Court of the Certificate Officer of Bankura.

CERTIFICATE CASE No. 258 OF 1905-1906.

Secretary of State for India in Council, decree-holder, *versus* Srimati Rani Ananda Kumari Devi, judgment-debtor.

NOTICE is hereby given that the undermentioned property of the judgment-debtor will be sold at a public sale in the Court premises by the Certificate Officer at Bankura on the 10th August 1905 at 12 A.M. for the realization of Rs. 629-11-2 in execution of the above decree:—

Thana Bankura, estate Chhatna, bearing tauzi No. 998 of the Bankura Collectorate. Revenue payable for the mahal, Rs. 2,287-1.

RAMENDRA KRISHNA DEB, Collector

Bankura Collectorate, the 19th June 1905. (728—3)

In the Court of the Certificate Officer of Bankura.

CERTIFICATE CASE No. 265 OF 1905-1906.

Secretary of State for India in Council, decree-holder, *versus* Nolini Nath Sinha Deb, guardian of minor Protap Naran Sinha Deb, judgment-debtor.

NOTICE is hereby given that the undermentioned property of the judgment-debtor will be sold at a public sale in the Court premises by the Certificate Officer of Bankura on the 10th August 1905 at 12 A.M. for the realization of Rs. 425-2-2 in execution of the above decree:—

Thana Vishnupur, estate Jamkundi, bearing tauzi No. 478, residuary, of the Bankura Collectorate. Revenue payable for the mahal, Rs. 965-14-9.

RAMENDRA KRISHNA DEB, Collector.

Bankura Collectorate, the 17th June 1905. (729—3)

INSOLVENT NOTICES.

In the matter of JOYGOPAL PAUL, an insolvent.

On Thursday, the 4th day of May last, it was ordered that the matters of the petition of the said insolvent be heard on Tuesday, the 4th day of July next, and that the said insolvent do then attend to be examined before the said Court.

Monmotho Nath Sen, Attorney. (712—2)

In the matter of TULSEE TELLY and another, insolvents.

On Wednesday, the 24th day of May last, it was ordered that the matters of the petition of the said insolvents be heard on Tuesday, the 4th day of July next, and that the said insolvent do then attend to be examined before the said Court.

K. M. Rukshit, Attorney. (713—2)

In the matter of MAHOMED ALA BUKSH, an insolvent.

On Tuesday, the 7th day of March last, it was ordered that the matters of the petition of the said insolvent be heard on Tuesday, the 4th day of July next, and that the said insolvent do then attend to be examined before the said Court.

R. E. Byack, Attorney. (714—2)

In the matter of HABIB MOHOMMED and others, insolvents.

On Monday, the 15th day of May last, it was ordered that the matters of the petition of the said insolvents be heard on Tuesday, the 4th day of July next, and that the said insolvent do then attend to be examined before the said Court.

hgP u& Co., Attorneys. (715—2)

In the matter of DANIEL SMITH, an insolvent.

On Friday, the 26th day of May last, it was ordered that the matters of the petition of the said insolvent be heard on Tuesday, the 4th day of July next, and that the said insolvent do then attend to be examined before the said Court.

Insolvent in person. (716—2)

In the matter of JAMES MICHAEL DOYLE, an insolvent.

On Tuesday, the 2nd day of May last, it was ordered that the matters of the petition of the said insolvent be heard on Tuesday, the 4th day of July next, and that the said insolvent do then attend to be examined before the said Court.

Insolvent in person. (717—2)

In the matter of SUNTOKE CHAND GOLECHA, an insolvent.

On Thursday, the 25th day of May last, it was ordered that the matters of the petition of the said insolvent be heard on Tuesday, the 4th day of July next, and that the said insolvent do then attend to be examined before the said Court.

Bannerjee & Bannerjee, Attorneys. (718—2)

In the matter of JOHN MACJOHN, an insolvent.

On Monday, the 20th day of March last, it was ordered that the matters of the petition of the said insolvent be heard on Tuesday, the 4th day of July next, and that the said insolvent do then attend to be examined before the said Court.

Pugh & Co., Attorneys. (719—2)

In the matter of WILLIAM SHEEHAM, an insolvent.

On Tuesday, the 2nd day of May last, it was ordered that the matters of the petition of the said insolvents be heard on Tuesday, the 4th day of July next, and that the said insolvent do then attend to be examined before the said Court.

C. C. Mitter, Attorney. (720—2)

In the matter of MOTHURARAM TELLY, an insolvent.

On Friday, the 5th day of May last, it was ordered that the matters of the petition of the said insolvents be heard on Tuesday, the 4th day of July next, and that the said insolvent do then attend to be examined before the said Court.

K. M. Rukshit, Attorney. (721—2)

In the matter of SHAIK HINGOO, an insolvent.

On Saturday, the 6th day of May last, it was ordered that the matters of the petition of the said insolvent be heard on Tuesday, the 4th day of July next, and that the said insolvent do then attend to be examined before the said Court.

P. N. Paul, Attorney. (722—2)

In the matter of JASPER LAMPHIER, an insolvent.

On Wednesday, the 10th day of May last, it was ordered that the matters of the petition of the said insolvents be heard on Tuesday, the 4th day of July next, and that the said insolvent do then attend to be examined before the said Court.

Insolvent in person. (723—2)

In the matter of DOYA CHAND KHETAN and another, insolvents.

On Friday, the 5th day of May last, it was ordered that the matters of the petition of the said insolvents be heard on Tuesday, the 4th day of July next, and that the said insolvents do then attend to be examined before the said Court.

K. M. Rukshit, Attorney. (724—2)

In the matter of N D. SUTHERLAND, an insolvent.

On Thursday, the 1st day of June instant, it was ordered that the matters of the petition of the said insolvent be heard on Tuesday, the 4th day of July next, and that the said insolvent do then attend to be examined before the said Court.

C. A. Smith, Attorney. (725—2)

In the matter of J. A. CASEY, an insolvent.

On Wednesday, the 31st day of May last, it was ordered that the matters of the petition of the said insolvent be heard on Tuesday, the 4th day of July next, and that the said insolvent do then attend to be examined before the said Court.

Insolvents in person. (726—2)

In the matter of CHARAN DAS PAUL, an insolvent.

On Monday, the 29th day of May last, it was ordered that the matters of the petition of the said insolvent be heard on Tuesday, the 4th day of July next, and that the said insolvent do then attend to be examined before the said Court.

Bannerjee Bannerjee, Attorneys. (727—2)

In the matter of SOSHEE BHUSAN COONDOO, and others, insolvents.

On Monday, the 8th day of May last, it was ordered that this matter be heard on Tuesday, the 4th day of July next, and that the said insolvents do then attend to be examined before the said Court.

A. K. Thakur, Attorney. (732—2)

In the matter of KAMINI MOHANA BASU, an insolvent.

On Tuesday, the 23rd day of May last, it was ordered that the matters of the petition of the said insolvent be heard on Tuesday, the 4th day of July next, and that the said insolvent do then attend to be examined before the said Court.

Insolvent in person. (733—2)

In the matter of LUCHMI CHAND and MUDDEN GOPAUL, insolvents.

On Wednesday, the 17th day of May last, it was ordered that the matters of the petition of the said insolvents be heard on Tuesday, the 4th day of July next, and that the said insolvents do then attend to be examined before the said Court.

Insolvents in person. (734—2)

In the matter of JADU NATH SEN GUPTA, an insolvent.

On Wednesday, the 24th day of May last, it was ordered that the matters of the petition of the said insolvent be heard on Tuesday, the 4th day of July next, and that the said insolvent do then attend to be examined before the said Court.

S. D. Dutt & Gupta, Attorneys. (735—2)

In the matter of CICIL MURRAY MORSE PELL and FRANCIS HIGGINS PELL, insolvents.

On Saturday, the 6th day of May last, it was ordered that Tuesday, the 4th day of July next, be appointed for the further hearing of this matter and that unless cause be shewn to the contrary on that day the said insolvents be discharged personally as well as to their after acquired property from all liabilities for debts, claims and demands of and against the said insolvents at the time of the filing of their petition for relief.

(736—2)

NOTICE.

In the Court of the District Judge of Jessore.

INSOLVENCY CASE No. 2 OF 1905.

Momrej Biswas, petitioner.

NOTICE is hereby given that Momrej Biswas of Kashipur, thana Jhinadah, district Jessore, was, on the 26th April 1905, declared an insolvent.

F. J. JEFFRIES,
Addl. District Judge.

Jessore, the 23rd May, 1905. (601—1—444)

CALCUTTA POST OFFICE NOTICE

Mails for—	Date and hour of closing at the General Post Office, Calcutta		Route by which despatched.
	1905.	P.M.	
United Kingdom, Aden, Egypt, Europe, America, West Africa *vid* United Kingdom and East Africa *vid* Aden (and also South Africa, if superscribed on the cover *vid* United Kingdom or Aden).	June 22	At 6-30	Per P. & O. steamer from Bombay.
Parcels and money-orders for the United Kingdom and other Foreign places.	,, 21	Parcels, 5 P.M.; M.-O., 4 P.M.	Ditto ditto.
* Australasian Colonies ..	,, 26	At 7-30	*Vid* Tuticorin and Colombo.*
† Straits Settlements (also China and Japan, if the Steamer's name is superscribed on the cover).	,, 23	,, 8-30	Per steamer *Laisang*.
Burma	,, 22	,, 7-30	
Burma, Penang and Singapore.	,, 24	,, 7-30	Per B. I. S. N Co.'s steamer.
Akyab, Kyaukpyu and Sandoway.	,, 23	,, 7-30	
Burma, Tavoy and Mergui	,, 26	,, 7-30	
South Africa (Letters), Supplemental.	,, 21	,, 7-30	Per steamer *Umkuzi* from Colombo.
Ditto (Parcels), Supplemental.	,, 21	,, 5	
Mauritius, Reunion, Mayotte, Nossi-Be.	,, 28	,, 7-30	Per steamer *Surada* from Colombo.
Mauritius, Reunion, Mayotte Nossi-be (Supplemental).	,, 29	,, 7-30	

* Although the date entered in column 2 is, as far as can be calculated, the latest safe date of posting for the next Mail steamer, full allowance being made for the steamer being in advance of her published timing, Mails for the places mentioned in column 1 are despatched daily to Tuticorin, so that they may proceed by any steamer from Colombo that has been unusually accelerated or retarded, or by any special opportunity that may be afforded by a steamer not belonging to one of the regular lines.

† Correspondence for China and Japan is despatched daily to Tuticorin, so that it may proceed by the first steamer from Colombo.

1. The letter-box for Inland articles will be cleared for the forenoon Mails at the following hours:—

For Goalundo, Arakan and Chittagong, at 5-45 A.M.
For Midnapore and Orissa districts, at 9 A.M.
For the Eastern districts, as far as Dacca and Mymensingh, at 6-15 A.M.
For Khulna and Jessore districts, at 7 A.M.
For Bombay, Central Provinces and Midnapore *vid* Bengal-Nagpur Railway, at 11-15 A.M., and with a late fee of ½ anna up to 11-40 A.M.

2. The letter-box will be cleared for the evening Mails at the following hours, viz.—

For the East Indian Railway Loop Mail, at 2-30 P.M., and with a late fee of ½ anna up to 2-55 P.M.
For the Northern Bengal, Darjeeling and Assam Mails, at 3-25 P.M., and with a late fee of ½ anna up to 3-50 P.M.
For the Bombay Mail *vid* Jubbulpore, at 6 P.M., and with a late fee of ½ anna up to 6-30 P.M.
For the Punjab Mail, at 7-30 P.M.
For Midnapore, Orissa, Madras Presidency and Ceylon, at 7-30 P.M.
For the Khulna Mail, at 7-30 P.M.
For the Eastern Bengal Mail, Darjeeling, and places on the Darjeeling-Himalayan Railway, at 7-30 P.M.
} and with a late fee of ½ anna up to 8 P.M. and with a late fee of 1 anna up to 8-45 P.M.

3. Late registered letters will be received between the following hours:—

For the Bombay Mail *vid* Jubbulpore, from 5 P.M. to 6-15 P.M.
For the Punjab Mail, from 6 P.M. to 7 P.M.
For the Eastern Bengal Mail, from 6 P.M. to 7 P.M.
For the Khulna Mail, from 6 P.M. to 7 P.M.
For Midnapore, Orissa, Madras Presidency and Ceylon, from 6 P.M. to 7 P.M.

NOTE.—The late fee on each registered letter will be 2 annas' which must be prepaid in stamps on the letter.

4. Articles for Burma and for Port Blair by sea are received without late fee up to 7-30 P.M., and with a late fee of ½ anna up to 8 P.M.

5. On the latest safe day of despatch of Mails for the Australasian Colonies, or any other Foreign Countries, *vid* Madras or Tuticorin, the letter-box for Foreign articles will be cleared for the last time at 7-30 P.M., and late letters and papers fully prepaid will be received up to 8-45 P.M.

6. On the day of despatch of the Mail for Europe (Thursday) the letter-box for Foreign articles will be cleared for the last time for articles, without the late fee, at 6-30 P.M., and late letters and papers fully prepaid will be received up to 6-45 P.M. Late registered articles will be received from 5 to 6 P.M. On the day of despatch of any Foreign Mail by sea, the letter-box will be cleared for the last time, without the late fee, up to 8-40 P.M., and late letters and papers up to 9 P.M. The late fee for Foreign articles is 4 annas, which must be prepaid in stamps affixed to the articles.

CALCUTTA G. P. O., *The 19th June 1905.* } JOHN OWENS, *Presidency Postmaster.*

Nadia Rivers.

Report showing the least depths of water for the week ending Friday, the 16th June 1905.

Name of River.	Reach of River.	Least depth of water sounding.	Remarks.
		Ft. in.	
Bhagirathi.	Entrance from Ganges	5 6	
	Thence to Geriah	5 0	Momintola.
	From Geriah to Jangipur	4 6	Kanupur.
	,, Jangipur to Berhampore	3 0	Amaniganj.
	,, Berhampore to Katwa	3 0	Bhootchat.
	,, Katwa to Nadia	4 0	Raghunathpur.
Bhairab-Jalangi.	Entrance from Ganges ...	7 0	
	Thence to Akriganj ...	5 6	Khamardiar.
	Akriganj to junction of the Bhairab and Jalangi ...	4 0	Kashiadanga.
	Thence to Patkabari	7 6	Lalnagar.
	Patkabari to Nadia . ..	4 0	Hantra.
Mathabhanga.	Entrance from Ganges ..	3 6	
	Thence to Dewanganj	2 0	Dewanganj.
	From Dewanganj to Shikarpur	1 3	Koormipara.
	,, Shikarpur to Boalia ...	3 0	Kadipur.
	,, Boalia to Chuadanga ...	2 9	Muhammadpur.
	,, Chuadanga to Kissengani and Hanskhali	6 0	Shibnibash.

Gauge Readings.

	Locality.	Date.	Hour.	Height above zero.	Height above mean sea-level.	Remarks.
			A.M.	Ft.	Ft.	
Ganges ..	Sahibganj	17-6-1905	6	3·50	71·50	Rise.
	Rampur Boalia	17-6-1905	Noon	47·05	47·05	Fall.
	Entrance of Bhagirathi Geriah	16-6-1905	A.M. 7	9·35	54·35	Steady
	Entrance of Bhairab-Jalangi Akriganj ...	16-6-1905	7	4·55	52·51	Fall.
	Entrance of Mathabhanga ...	...	...	...	...	...
Bhagirathi.	Jangipur ...	16-6-1905	A.M. 8	25·50	53·00	Fall.
	Berhampore ...	16-6-1905	7	7·03	46·77	Do.
	Katwa ...	16-6-1905	P.M. 5	7·85	23·01	Do.
Jalangi ..	Krishnagar ...	16-6-1905	...	3·11	...	...
	Sarupganj ...	17-6-1905	Noon 12	7·80	7·80	Steady.
Mathabhanga.	Hanskhali .	17-6-1905	P.M. 4	5·90	16·75	Rise.

A. K. BANERJI, Accountant,
for *Exe. Engr., Nadia Rivers Division.*

Berhampore, the 19th June 1905.

THE INDIAN LAW REPORTS.

Published in FOUR SERIES, viz.:

CALCUTTA, MADRAS, BOMBAY AND ALLAHABAD.

THE Indian Law Reports, published under the authority of the Governor General in Council, are printed in monthly Parts, which are issued, as soon as possible after the first of each month, at Calcutta, Madras, Bombay and Allahabad, respectively.

The Reports comprise four Series—one for the Calcutta High Court, a second for the Madras High Court, a third for the Bombay High Court, and a fourth for the Allahabad High Court.

The cases heard by the Privy Council on appeal from each High Court are reported in the Series for that High Court. Cases heard by the Privy Council on appeal from Provinces in India not subject to any High Court are reported in the Calcutta Series.

The Calcutta Series is distributed by the Bengal Secretariat Book Depôt: and the Madras, Bombay and Allahabad Series are distributed direct from Madras, Bombay and Allahabad, respectively.

Persons desiring to subscribe for or purchase the Reports should apply to—

the Officer in charge, Bengal Secretariat Book Depôt, Calcutta, or

the Superintendent, Government Press, Madras, or

the Superintendent, Government Central Press, Bombay, or

the Curator of Government Books, United Provinces of Agra and Oudh, Allahabad.

PRICES.

THE terms of subscription, and the terms on which current issues and back numbers are sold, are as follows:—

	Without postage.	With Indian postage.	With Foreign postage.
COMPLETE SERIES—	Rs. A. P.	Rs. A. P.	Rs. A. P.
Current issues, per annum	.....	22 8 0	28 0 0
Back numbers, per annum	20 0 0	22 8 0	28 0 0
CALCUTTA SERIES—			
Current issues or back numbers, per annum ..	10 0 0	12 8 0	14 0 0
MADRAS, BOMBAY or ALLAHABAD SERIES—			
Current issues or back numbers, per annum ...	6 0 0	7 0 0	8 0 0
ANY MONTHLY PART—			
Calcutta Series	2 0 0	2 0 0	2 0 0
Madras Bombay or Allahabad Series	1 0 0	1 0 0	1 0 0

All payments must be made in advance. Remittances to Calcutta should be addressed to the TREASURER, BENGAL SECRETARIAT, *Writers' Buildings, Calcutta.*

PARTS OUT OF STOCK AND DUPLICATE COPIES.

WHEN a requisition is received for any set of the Reports, and any Parts are out of stock, the following deduction from the foregoing rates is made for such Parts:—

	Without postage.	With Indian postage.
CALCUTTA SERIES—	Rs. A. P.	Rs. A. P.
All Parts for one year	7 2 6	8 6 3
Any one Part	0 8 9	0 10 3
MADRAS, BOMBAY OR ALLAHABAD SERIES—		
All Parts for one year	4 4 6	4 11 3
Any one Part	0 5 3	0 5 9

If any Part is lost in transit to a subscriber, and the fact is reported to the office of distribution within three months from the date of publication, a duplicate will be supplied at the following rate:—

	Without postage.	With Indian postage.
	Rs. A. P.	Rs. A. P.
CALCUTTA SERIES	0 8 9	0 10 3
MADRAS, BOMBAY OR ALLAHABAD SERIES	0 5 3	0 5 9

REPRINTS.

THE Complete Series for the years 1876 to 1881, 1883, 1886, 1888, 1890, 1892 to 1896 and 1899 to 1903 has been reprinted, and may be purchased at the Bengal Secretariat Book Depôt, Calcutta, either wholly or in part. All Parts required to complete the stock of the Reports for other years are now being reprinted. Complete Reports from the beginning to date will therefore shortly be available at the Bengal Secretariat Book Depôt.

ADVERTISEMENTS FOR THE CALCUTTA SERIES.

ADVERTISEMENTS of law publications only are received. Rates can be ascertained on application to the Bengal Secretariat Book Depôt.

THE BENGAL LAW REPORTS.

SEVERAL volumes of the Bengal Law Reports, from August 1868 to December 1875, and Full Bench Rulings, Parts I and II, are available at the Bengal Secretariat Book Depôt, Calcutta, at the following rates:—

	Without postage.	With Indian postage.
	Rs. A. P.	Rs. A. P.
BENGAL LAW REPORTS, for one year ...	20 0 0	22 8 0
Single copies, each	2 0 0	2 0 0
FULL BENCH RULINGS Part I and II ...	20 0 0	22 8 0

Pure Sulphate of Quinine and Sulphate of Cinchonidine.

MANUFACTURED AT THE BENGAL GOVERNMENT CINCHONA PLANTATION

FROM 1st April 1905 the price of these articles will be as follows:—

Quinine.

1	Pound tin,	Rs. 16,	or, post free,	Rs.	16-8.
½	,, ,, ,,	8	,, ,, ,,	,,	8-6.
¼	,, ,, ,,	4	,, ,, ,,	,,	4-6.

Cinchonidine.

1	Pound tin,	Rs. 12,	or, post free,	Rs.	12-8.
½	,, ,, ,,	6	,, ,, ,,	,,	6-6.
¼	,, ,, ,,	3	,, ,, ,,	,,	3-6.

Analysis shows these articles to be of the purest manufacture; and they are guaranteed to be free from wilful admixture with the inferior alkaloids. They are for sale only to Government officers, and only for cash, and may be had from the Superintendent, Botanic Garden, Sibpur, near Calcutta. Cinchonidine can also be purchased by dealers at the following rates:—

1	Pound tin,	Rs. 16,	or, post free,	Rs.	16-8.
½	,, ,, ,,	8	,, ,, ,,	,,	8-6.
¼	,, ,, ,,	4	,, ,, ,,	,,	4-6.

Cinchona Febrifuge.

Cinchona Febrifuge can be purchased by all Government officers and by any one taking *five pounds* and upwards at a time from the Superintendent, Botanic Garden, Calcutta, at the following rates—per four-ounce tin, Re. 1 ans. 14; per eight-ounce tin, Rs. 3 and. 12; per pound tin, Rs. 7 ans. 8; the general public can be supplied by the Superintendent, Botanic Garden, *for cash only*, at the undernoted rates—per four-ounce tin, Rs. 2 ans. 4; per eight-ounce tin, Rs. 4 ans. 8; per pound tin, Rs. 9. This medicine is also sold by the principal European and Native druggists in Calcutta. Postage, four annas per four-ounce tin; six annas per eight-ounce tin; and eight annas per pound tin, in addition to the foregoing rates.

THE CALCUTTA GAZETTE.

The 1st March 1901.—From this date the subscription to, and postage for, the *Calcutta Gazette* will be at the following rates, payable in advance:—

PER ANNUM.	For Calcutta.	For the Mufassal including postage.
	Rs. A.	Rs. A.
Entire *Gazette*	15 0	20 0
Parts I, Ia and Ib together ...	5 0	7 8
Part II	1 0	2 12
Parts III, IV and IVA together	4 0	6 0
,, V and VI together ..	2 0	3 0
Appendix (Marine Notifications)	1 0	2 12
Supplement	5 0	7 8
PER ISSUE.		
Entire *Gazette*	0 8	0 10
Supplement	0 4	0 5

N B.—Separate Parts of each issue of the *Gazette*, and occasionally important Rules and Extracts, can be obtained from the Officer in charge, Bengal Secretariat Book Depôt, at the rate of one anna for every sixteen pages or a fraction thereof. Postage according to weight.

RATES FOR ADVERTISEMENTS in the *Calcutta Gazette*:—

Full page, per issue	Rs. 20
Half ,, ,, ,, ...	,, 10

Casual advertisements, 4 annas per line per insertion.

Parts I, II, and III of a Descriptive Catalogue of the Sanskrit Manuscripts in the Library of the Calcutta Sanskrit College, prepared by Pandit Hrishikesa Sastri and Babu Siva Chandra Gui, M.A., B.L., of that College, are offered to the public for sale. The Catalog being to be completed in 23 parts, the price of each part so is 12 annas a copy, exclusive of postage. Copies can be obtained from the Principal of the Sanskrit College, Calcutta.

GOVERNMENT PUBLICATIONS FOR SALE

At the Bengal Secretariat Book Depôt, Writers' Buildings, Calcutta, and by the following Agents :—

AGENTS IN INDIA.

Messrs. Thacker, Spink & Co., Calcutta and Simla.
Messrs. Newman & Co., Calcutta.
Messrs Higginbotham & Co., Madras.
Messrs. Thacker & Co., Ld., Bombay.
Messrs. A. J. Combridge & Co., Bombay.
The Superintendent, American Baptist Mission Press, Rangoon.
Mrs. Radhabai Atmaram Sagoon, Bombay.
Messrs. R. Cambray & Co., Calcutta.
Rai Sahib M. Gulab Singh & Sons, Proprietors of the Mufid-i-am Press, Lahore, Punjab.
Messrs. S. K. Lahiri & Co., Printers and Booksellers, College Street, Calcutta.
Messrs. V. Kalyanarama Iyer & Co., Booksellers, &c., Madras.
Messrs. D. B. Taraporevala, Sons & Co., Booksellers, Bombay.
Messrs. G. A. Nateson & Co., Madras.
Mr. N. B. Mathur, Superintendent, Nazir Kanum Hind Press, Allahabad.
The Calcutta School Book Society.

AGENTS IN ENGLAND.

Mr. E. A. Arnold, 41 and 43 Maddox Street, Bond Street, London, W.
Messrs. Constable & Co., 16 James Street, Hay Market, London, W.
Messrs. Kegan Paul, Trench, Trübner & Co., Charing Cross Road, London.
Mr. B. Alfred Quaritch, 15 Piccadilly, London.
Messrs. P. S. King & Son, 2 & 4 Great Smith Street, Westminster, London.
Messrs. H. S. King & Co., 65 Cornhill, London.
Mr. B. H. Blackwell, 50-51, Broad Street, Oxford.
Messrs. Deighton Bell & Co., Cambridge.

AGENTS ON THE CONTINENT.

Messrs. R. Friedländer & Sohn, Berlin, N. W. Carlstrasse, 11.
Mr. Otto Harrassowitz, Leipzig.
Mr. Karl Hiersemann, Leipzig.
Mr. Ernest Leroux, 28 Rue Bonaparte, Paris.
Mr. Martinus Nijhoff, The Hague.

NOTICE.—Books required for private use can be purchased. Applications should be accompanied by remittance in each case.

All remittances on account of subscriptions to, or prices of, Gazettes, Indian Law Reports or other Government publications available for sale at the Bengal Secretariat Book Depôt, or for cost of advertisements published in the Gazettes should, in future, be made payable to the "Treasurer, Bengal Secretariat, Calcutta." Advices of such remittances, if separately sent, should be addressed to the "Accountant, Bengal Secretariat." All advertisements intended for publication in the *Calcutta* or *Bengali Gazette* should be sent direct to the Superintendent, Government Printing, Bengal.

Books required for the Public Service should be obtained through the Heads of Departments

☞ *The amounts within parentheses are for packing and postage.*

NEW PUBLICATIONS ISSUED DURING THE CURRENT QUARTER.

APPOINTMENT DEPARTMENT.

Quarterly Civil List for Bengal, corrected up to 1st April 1905. Rs. 3. (4a.)

FINANCIAL DEPARTMENT.

Report on the Maritime Trade of Bengal for the official year 1904-05. F'cap. Paper cover Re. 1 (2a.).

GENERAL DEPARTMENT.

Kurukh Folk-lore in the original collected and transliterated by Revd. Ferd Hahn. F'cap. 4to, cloth. Rs. 2. (3a.)
List of officers in the Subordinate Educational Service, Bengal, corrected up to 1st April 1905. F'cap Paper cover. As. 8 (1a.).

LEGISLATIVE DEPARTMENT.

The Sunderbans Act 1905 (Ben. Act I of 1905) in English, Bengali or Hindi. 6p. (1a.)
The Bengal Repealing Act 1905 (Ben. Act II of 1905) in English Bengali or Hindi. 6p. (1a.)
The Chota Nagpur Rural Police Act, 1887 (Bengal Act V of 1887), as modified up to 1st June 1904, in Bengali. As. 2-6. (1a.).
The Bengal Smoke Nuisances Act 1905 (Bengal Act III of 1905) in English or Hindi. As. 2 (1a.).
The Indian Paper Currency Act 1905 (III of 1905) in Bengali or Uriya. As. 2. (1a.)
Ditto ditto in Hindi. As. 2-6. (1a.)
The Indian Railway Boards Act 1905, (IV of 1905) in Bengali, Hindi or Uriya. 6p. (1a.)

POLITICAL DEPARTMENT.

Administration Report on the Jails of Bengal for the year 1904. F'cap., boards. Paper cover. Re. 1 (4a.).

PUBLIC WORKS DEPARTMENT.

Classified List and Distribution Return of the Bengal Public Works Department, Establishment, corrected up to 31st March 1905. As. 4. (2a.)

REVENUE DEPARTMENT.

A Monograph on Gold and Silver Work in the Bengal Presidency. By D. N. Mookherjee, Assistant Director, Land Records and Agriculture. F'cap. Paper cover. Re. 1-8. (3a.)
Annual Report on the Survey Operations in Bengal during the year 1903-04. F'cap. Paper cover. Re. 1 (2a.).
Annual Progress Report on Forest Administration in the Lower Provinces of Bengal for the year 1903-04. F'cap. Paper cover. Re. 1-4 (2a.).
Annual Report of the Director of the Department of Land Records and Agriculture, Bengal, on Settlements and Land Records for the year ending 30th September 1904. F'cap. Paper cover. As. 8 (2a.).

An account of the Research work in Indigo carried out at Dalsing Sarai Research Station (under subsidy of the Government of Bengal) from 1903 to March 1904. by W. Popplewell Bloxam and H. M. Leake. F'cap., board. Paper cover. Rs. 5 (4s.).
Report on an inquiry into the state of the Tasar Silk Industry in Bengal and the Central provinces of India. By N. G. Mukerjee. F'cap. Paper cover. Re. 2. (2s.)
Annual Report of the Burdwan Experimental Farm for the year 1903-04. F'cap. Paper cover. As. 7. (1s.)

NEW PUBLICATIONS ISSUED BETWEEN 1ST OCTOBER 1904 AND THE 31ST MARCH 1905.

APPOINTMENT DEPARTMENT.

Quarterly Civil List of Bengal, corrected up to 1st January 1905. Rs. 3. (4s.)

FINANCIAL DEPARTMENT.

Report on the Road and Public Works Cess Operations of the Lower Provinces for the official year 1903-04. F'cap. Paper cover. Rs. 2. (2s.)
Report on the Administration of the Excise Department in the Lower Provinces of Bengal for the year 1903-04. F'cap. Paper cover. Rs. 2. (2s.)

GENERAL DEPARTMENT.

Report on Inland Emigration during the year ending 30th June 1904. F'cap. Paper cover. As. 8. (1s.)

General Report on Public Instruction in Bengal for 1903-04. F'cap. Paper. Re. 1-5-3. (2s.)
List of Officers in the Subordinate Educational Service, Bengal, corrected up to 1st January 1905. As. 8. (1s.)
Bengal Administration Report, 1903-04. F'cap. Cloth. Rs. 3. (6s.)

JUDICIAL DEPARTMENT.

Annual Report on the Police Administration of the Town of Calcutta and its suburbs for the year 1903. F'cap. Paper cover. Re. 1. (2s.)

LEGISLATIVE DEPARTMENT.

The Chota Nagpur Landlord and Tenant Procedure Act (Bengal Act I of 1879, modified) with notes by H. W. C. Carnduff. Re. 1-8. (2s.)
The Indian Emigration (Amendment) Act 1904 (XII of 1904) in Bengali, Hindi or Uriya. 6p. (1s.)
The Indian Stamp (Amendment) Act 1904 (XV of 1904) in Bengali, Hindi or Uriya. 1s. (1s.)
The Local Authorities Loans Act 1905, (I of 1905) in Bengali, Hindi or Uriya. 6p. (1s.)
The Indian Universities Validation Act 1905 (II of 1905) in Bengali, Hindi or Uriya. 6p. (1s.)
The Stage Carriages Act 1861 (XVI of 1861 as modified up to 1st February 1898, in Hindi. As 3. (1s.)
The Indian Evidence Act 1872, (I of 1872) as modified up to 1st November 1902, in Hindi. As. 14 (1s.)
The Indian Explosives Act 1884 (IV of 1884) as modified up to 1st December 1903, in Hindi. As. 2. (1s.)
The Bengal Tenancy Act 1885 (VIII of 1885) as modified up to 1st December 1903, in Uriya. Re. 1 (2s.)
The Indian Railway Act 1890, (IX of 1890) as modified up to 1st May 1896 and corrected up to the 1st December 1903, in Hindi. As. 13. (1s.)

MUNICIPAL DEPARTMENT.

List of qualified Medical Practitioners in Bengal, 1904. Royal 8vo. Boards. Paper cover. Re. 1. (2s.)
Resolution reviewing the working of Municipalities in Bengal during the year 1903-04. F'cap. Paper cover. Re. 1. (2s.)
Resolution reviewing the Reports on the working of District Boards in Bengal during the year 1903-04. F'cap. Paper cover. Re. 1. (1s.)

PUBLIC WORKS DEPARTMENT.

Conditions under which Electric Meters and other instruments will be accepted for testing in the Government Electrical Laboratory, Calcutta, and Table of Fees. F'cap. Paper cover. 1s. (1s.)
Revenue Report of the Government of Bengal, Public Works Department, Irrigation Branch, for the year 1903-04. F'cap. Boards. Paper cover. Rs. 2. (3s.)
Classified List and Distribution Return of Establishment of the Public Works Department, Bengal, corrected up to 31st December 1904. Rs. 4. (2s.)
Resolution on the Embankment and Drainage Reports of the Government of Bengal, Irrigation Department, for the year 1903-04. F'cap. Boards. Paper cover. Re. 1. (2s.)

REVENUE DEPARTMENT.

Annual Report on the Survey Operations in Bengal during 1903-04 (from October 1903 to September 1904). F'cap. Paper cover. Re. 1. (2s.)
Final Report on the Survey and Settlement Operations in the Saran District, 1893 to 1901, by J. H. Kerr, Esq., Settlement Officer, North Bihar. F'cap. Boards, paper cover. Rs. 4-8. (6s.)
Final Report on the Survey and Settlement Operations in the Darbhanga District, 1896 to 1903, by J. H. Kerr, Esq. F'cap. Boards, paper cover. Rs. 6. (5s.)
Abstract of the Indian Factories Act, 1881, in sheet form, for hanging up in Factories. In English and Hindi and Urdu As. 4. (1s.) unmounted. Re. 1-4 mounted
Agricultural Statistics of the Lower Provinces of Bengal for 1903-04. F'cap. Paper cover. As. 8. (1s.)
Report on Wards and attached Estates in the Lower Provinces for the year 1903-04. F'cap. Paper cover. Re. 1-8. (2s.)
Report on the Land Revenue Administration of the Lower Provinces for the year 1903-04. F'cap. Paper cover. Rs. 3. (2s.)

STATISTICAL DEPARTMENT.

The Trade of Bengal with Nepal, Thibet, Sikkim and Bhutan for the year ending March 1904. Boards. Paper cover. Re. 1-2. (2s.)
Report on the Trade carried by Rail and River in Bengal in the official year 1903-04. F'cap. Board. Paper cover. Rs. 4. (5s.)

OLDER PUBLICATIONS.

A General Catalogue of all Government Publications (corrected up to 30th June 1904) may be obtained *gratis* on application to the Officer in charge, Bengal Secretariat Both Dept.

Publications for sale at the office of the Chief Inspector of Explosives with the Government of India.

Rules for the manufacture, possession and sale of explosives issued by each of the Local Governments and Administrations. Price 12s.
Rules for the transport and importation of explosives issued by the Government of India. Price 12s
Rules for the transport and importation of explosives at the Port o Calcutta. Price 4s

Publications for sale at the Custom House, Calcutta.

Review of the Maritime Trade of Bengal and its Chief Port (Calcutta) for the year 1904-05. Price Re. 1.
Annual Statement of the Sea-borne Trade and Navigation of Bengal, Foreign and coasting combined in one volume, for the year 1903-04. Price Rs. 6.
Ditto for 1904-05 will be ready early in September. Price Rs. 6.
Previous years' volumes can be obtained at the same price.

GOVERNMENT PUBLICATIONS

BY THE SUPERINTENDENT OF GOVERNMENT
8 HASTINGS STREET, CALCUTTA.

A General Catalogue of all Government Publications may be obtained
Central Press, Calcutta.

All books published by the Superintendent of Government Printing, India, can be pur
the following or any other booksellers:—

AGENTS IN EUROPE.

Mr. E. Arnold, 41 and 43 Maddox Street, Bond Street, W. London.

Messrs. Constable & Co., 16 James Street, Haymarket, W. London.

Messrs. Kegan Paul, Trench, Trubner & Co., Charing Cross Road, London.

Mr. Bernard Quaritch, 15 Piccadilly, London.

Messrs. P. S. King and Son, 2 & 4 Great Smith Street, Westminster.

Messrs. H. S. King & Co., 65 Cornhill, and 9 Pall Mall, London.

Messrs. Grindlay & C
London, S. W., Ag
Army List.

Mr. Otto Harrassowitz

Mr. Karl Hiersemann

Messrs. R. Friedlander &
Carlstrasse, 11

Mr. Ernest Leroux, 28 R

Mr. Martinus Nijhoff, Ha

Mr. B. H. Blackwell, 50
Oxford.

Messrs. Deighton Bell & Co

AGENTS IN INDIA.

Messrs. Thacker, Spink & Co., Calcutta and Simla.

Messrs. Newman & Co., Calcutta.

Messrs. R. Cambray & Co., Calcutta.

Messrs. S. K. Lahiri & Co., Calcutta.

Eveyln, Hubert, & Co.,* 149, Dhurmotollah Street, Calcutta.

Messrs. Higginbotham & Co., Madras.

Messrs. V. Kalyanarama Iyer & Co., Madras.

Messrs. G. A. Natesan & Co., Madras.

Messrs. Thacker & Co., Ld., Bombay.

Messrs. A. J. Combridge & Co., Bombay.

Messrs. D. B. Taraporevala, Sons & Co., Bombay.

Mrs. Radhabai Atmaram Sagoon, Bombay.

Superintendent, American Baptist Mission Press, Rangoon.

Rai Sahib M. Gulab Singh & Sons, Mufid-i-Am Press, Lahore.

Mr. N. B. Mathur, Superintendent, Nazair Kanun Hind Press, Allahabad.

Manager, Educational Book
and Jubbulpore.*

Manager of the Imperial
Chandny Chauk Street, D

Manager, "East Coast News

Manager, "The Agra Medic
operative Association, Lim
sors to A. John & Co., Agra

Mr. T. K. Seetharama Aiyar,

Lala Debi Prasad, Vakil an
Law Press, Cawnpore.*

Superintendent, Basel Missio
Tract Depository, Mangalore

Messrs. P. Varadachary & Co.

Mr. Sunder Pandurang, Bombay

The Mercantile Mission Branch,

H. Dowman, Esq. (late Extra
Superintendent, Survey
Allahabad.*

H. Liddell, Esq., Printers, etc., 7, E
Allahabad.*

* Agents for sale of the Legislative Department publications.

NOTICE.—Books and Acts required for private use only can be purchased. Applications should be ac
a remittance, unless it is wished that the books should be sent by value-payable post, in which case, besides
postage, an additional charge is made for registration and commission.

Books and Acts required for the public service should be obtained through Local Governments to whom the
subordinate.

Application for Government publications which are no longer in print should be made to the Agents of the
Government under whose orders they were originally issued.

(The amounts within parentheses are for packing and postage.)

List of New Books published during the Current Quarte

LEGISLATIVE DEPARTMENT.

The Bengal Code, Vol. II, 3rd Edition, 1905. (Now ready). Cloth, Super-Royal 8vo. Rs. 6 (10*a*.)

The Ajmere Code, 3rd Edition, 1905. Cloth. Super-Royal 8vo. Rs. 2-8 or 3*s*. 9*d*. (7*a*.)

Act XIII of 1885, The Indian Telegraph Act, 1885, as modified up to 1st March 1905. 5*a*.

Act III of 1900, The Prisoners Act, as modified up to 1st March 1905. 6*a*. 6*p*. (1*a*.)

HOME DEPARTMENT.

Scientific Memoirs by Officers of the Medical and Sanitary Departments of the Gover
ment of India—Oriental or Delhi Sore by Captain S. P. James, M.B., I.M.S., New serie
No. 13. Super-Royal 4to. Limp cover. 10*a*. or 1*s*. (3*a*.)

Scientific Memoirs by Officers of the Medical and Sanitary Department of the Govern
ment of India—On a parasite found in the White Corpuscles of the blood of dogs by
Captain S. P. James, M.B., I.M.S. New series No. 14. Super-Royal 4to. Limp cover 10*a*. or 1*s*
(3*a*.)

Scientific Memoirs by Officers of the Medical and Sanitary Departments of the Government
of India—On a parasite found in persons suffering from Enlargement of the Spleen in
India (Third Report), by Lt. S. R. Christophers, M.B., I.M.S., New series, No. 15. Super Royal.
4to. Limp cover. 10*a*. or 1*s*. (2*a*.)

Scientific Memoirs by Officers of the Medical and Sanitary Departments of the Govern-
ment of India. The specificity of antivenomous Sera with special reference to a Serum
prepared with the venom of Daboia Russelli by Captain George Lamb, M.D., I.M.S.
New series, No. 16. Super-Royal 4to. Limp cover. 6*a*. or 7*d*. (2*a*.)

Imperial Library List of Additions, Third Series, with subject index, March 1905. No. 7,
8 and 9, Super-Royal 4to. Paper cover. 8*a*. or 9*d*. (2*a*.) each.

The Private Diary of Ananda Ranga Pillai, Vol. I, 1736 to 1746.—Dubash to Joseph Francois
Dupleix, Knight of the Order of St. Michael, and Governor of Pondichery.—A record of Matters,
Political, Historical, Social, and Personal, from 1736 to 1761. Translated from the Tamil by the order of the Government
of Madras and Edited by Sir J. Frederick Price, K.C.S.I., late of the I.C.S., assisted by R. Rangachari, B.A. Rs. 3 or 4*s*
6*d*. (7*a*.)

the Department of the Governm[illegible] of India. April to June
a. or 5d. (1a.)
tional Association for Supplying Female Medical Aid to the
9 year 1904. (20th issue.) Royal 8vo. Limp cover. Re. 1 or 1s. 4d. (4a.)
erities. Vol. I, by Colonel C. T. Bengham. Royal 8vo. cloth. Rs. 15 or 22s. 6d. (7a.)
ector-General of Archæology for the year 1903-04. Part I. Foolscap.

UE AND AGRICULTURE DEPARTMENT.

st Administrations in the Andamans for 1903-04. Foolscap. Paper

st Administration in Baluchistan for 1903-04. Foolscap. Paper cover

r 1904. Nos. I to XIII with their explanatory text and cover. Rs. 3-4 (4a.) per set

the Officers of Engineer, Accounts and State Railway Revenue.
rrected to 31st December 1904. Vols. I and II (complete). Royal 8vo.

FOREIGN DEPARTMENT.

al Administration of the territories within the Central India Agency for
o. CCCCXVI.) Foolscap, board. Re. 1 or 1s. 6d. (2a.)
g of the Thagi and Dakaiti Department for 1903. (Selection No. CCICCI.)
9a. or 11d. (1a.)
ort on the Persian Gulf Political Residency and Maskat Political
-04. (Selection No. CCCCXI.) Foolscap, board. Re. 1 or 1s. 6d. (2a.)
ort of the Baluchistan Agency for 1903-04. (Selection No. CCCCXVII.
e. 1-12 or 2s. 8d. (3a.)
olitical Administration of the Rajputana States and Ajmere-Merwara
(Selection No. CCCCXVIII.) Foolscap, board. Re. 2 or 3s. (6a.)
ation, Dispensaries and Jails in Rajputana for 1903 and on Vaccination
1903-1904. (Selection No. CCCCXIV.) Foolscap, board. Re. 1 or 1s. 6d. (4a.)

FINANCE DEPARTMENT.

ent for 1904-05 and 1905-06. Foolscap, board. Re. 1-8 or 2s. 3d. (6a.)

COMPTROLLER-GENERAL.

eport on the Accounts of the Government of India for 1903-04 by A. F.
Foolscap. Board. 8a. or 9d. (6a.)

STATISTICAL DEPARTMENT.

ie and Navigation Accounts of British India for the month of February
11 of 1904-05. Royal 8vo, Stitched. 8a. or 9d. (2a.)
e External Land Trade of British India for the month of December 1904, No. 9
Royal 8vo., stitched. 8a. or 9d. (2a.)
cotton spinning and weaving in the Indian Mills in January 1905 and in the
s, April 1904 to January 1905, compared with the corresponding period of
nd 1903-04. Royal 8vo., stitched. 2a. or 2d (1a.)
f Cotton Spinning and Weaving in the Indian Mills in February 1905 and
l months, April 1904 to February 1905, compared with the corresponding period
03 and 1903-04. Royal 8vo. Stitched. 2a. or 2d. (1a.)
elating to the Trade carried by rail and river in India in the quarter and in
nths ending September 1904, compared with the corresponding periods of he
902 and 1903. No. 2 of 1904-05. Foolscap., paper cover. 8a. or 9d. (3a.)
Trade and Navigation Accounts of British India for the month of March
905. No. 11. Royal 8vo. Stitched. 8a. or 9d. (2a.) each.
relating to the Sea-borne Trade and Navigation of British India for the calendar year
compared with the years 1902 and 1903. 8a. or 9d. (1a.)

MILITARY DEPARTMENT.

arterly Indian Army List for April 1905, New series, No. 4. Royal 8vo., paper cover
or 4s. 6d. (8a.)
ilitary Budget Estimate for the year 1905-1906. Foolscap, board. Rs. 1-8, or 2s. 3d. (8a.)
dian Appendix to the Signalling Regulations, 1904. Royal 16mo. Cloth. As. 8 or 9d. (1a.)

RAILWAY BOARD.

t (dated 30th December 1903) on the Organisation and Working of Railways in
merica by Neville Priestley, Esq. Foolscap. Paper cover. Rs. 3 or 4s. 6d. (3a.)

st of Books published from October 1904 to March 1905.

LEGISLATIVE DEPARTMENT.

e Indian Registration Act, 1877 (III of 1877), as modified up to 1st April, 1900, with footnotes brought down to 1st November, 1902. 11a. (2a.)

The Indian Emigration Act, 1883 (XXI of 1883), as modified up to 1st December, 1902. 11a.

Act XXX of 1852. An Act for the Naturalization of Aliens, as modified up to 1st December, 1902. 2a. (1a.)

[illegible] V of 1861. The Police Act, 1861. As modified up to 7th March, 1903. 7a. 6p. (1a.)

t X of 1873. The Indian Oaths Act. As modified up to 1st February, 1903. 3a. 9p. (1a.)

ct XIX of 1883. The Land Improvement Loans Act, 1883. As modified up to 1st February, 1903. 2a. 6p. (1a.)

Act XII of 1884. The Agriculturists' Loans Act, 1884. As modified up to the 15th December, 1896, and with footnotes brought down to the 1st February, 1903. 2a. (1a.)

Act IX of 1890. The Indian Railways Act, 1890. As modified up to 1st May, 1896, with footnotes brought down to 1st January, 1903. 15a. (3a.)

Act XXXIV of 1850. The State Prisoners Act, 1850. As modified up to 30th April, 1903. 2a. 6p. (1a.)

Act XXXIV of 1858. The Lunacy (Supreme Courts) Act, 1858. As modified up to 30th April, 1903. 4a. 3p. (1a.)

Act XXXV of 1858. The Lunacy (District Courts) Act, 1858. As modified up to 30th April, 1903. 2a. 3p. (1a.)

Act V of 1873. The Government Savings Banks Act, 1873. As modified up to 1st April, 1903. 3a. 6p. (1a.)

Act II of 1886. The Indian Income Tax Act 1886. As modified up to 1st April, 1903. 8a. (1a. 6p.)

Act I of 1878. The Opium Act, 1878. As modified up to 1st December, 1896, with footnotes brought down to 1st March, 1903. 5a. 6p. (1a.)

Act III of 1865. The Carriers Act, 1865. As modified up to 31st May, 1903. 3a. (1a.)

Act IX of 1897. Amending the law relating to Government and other Provident Funds. As modified up to 1st May, 1896, with footnotes brought down to 1st January, 1903. 1a. 6p. (1a.)

Act No. XII of 1855 (Legal Representatives' Suits), as modified up to 1st November, 1904. 1a. 6p. (1a.)

Act No. IX of 1860 [Employers and Workmen (Disputes)], as modified up to 1st December, 1904. 1a. 6p. (1a.)

Act No. XXI of 1860 (Societies Registration), as modified up to 1st December, 1904. 2a. 9p. (1a.)

The Punjab Laws Act, 1872 (IV of 1872), as modified up to 1st November, 1904. 7a. 1s. (1a.)

The Indian Christian Marriage Act, 1872 (XV of 1872), as modified up to 1st December, 1904. 10a. (1a.)

Act No. X of 1891 (Indian Penal Code Amendment), as modified up to 1st December 1904. 1a. (1a.)

The Indian Petroleum Act, 1899 (VIII of 1899), as modified up to the 1st December 1904 7a. (1a.)

The Indian Extradition Act, 1903 (XV of 1903), as modified up to 1st December, 1904. 5a. 6p. (1a.)

Act V of 1869. The Indian Articles of War, as modified up to 1st December 1904. Royal 8vo. Stitched. Re. 1 2a. (3a.)

Act XV of 1881. The Indian Factories Act. 1881, as modified up to the 1st December 1904. Royal 8vo. Stitched. 5a. 6p. (1a. 6p.)

Act V of 1883. The Indian Merchant Shipping Act, 1883, as modified up to the 1st December, 1904. Royal 8vo. Stitched. 6a. (1a.)

The Central Provinces Code, 3rd Edition, 1905. Cloth. Super-Royal 8vo. Re. 4 or 6s. (6a.)

The Bengal Code, Volume I, 3rd Edition, 1905 (Now ready). Cloth. Super-Royal. Price all 5 Volumes Rs. 30 or 45s. Vol. I. Rs. 6 or 9s. (8a.)

The Public Gambling Act, 1867 (III of 1867), as modified up to the 1st January, 1905. As. 4 or 5d. (1a.)

The Indian Contract Act, 1872 (Act IX of 1872), as modified up to the 30th June, 1901. Royal 8vo. Stitched. Re. 1-4a. (2a.)

HOME DEPARTMENT.

Scientific Memoirs by Officers of the Medical and Sanitary Departments of the Government of India. On a parasite found in persons suffering from enlargement of the spleen in India, by Lieut. S. R. Christophers, M.B., I.M.S., New series, No. 11. Super-Royal 4to. Limp cover. Rs. 2 or 3s. (3a.)

Report on the Administration of Criminal Justice in Lower Provinces of Bengal during the year 1903. Foolscap. Paper cover Re. 1. or 1s. 6d. (2a.)

Imperial Library List of Additions, September to December 1904, Nos. 1—6. Foolscap. Paper cover. As. 8 or 9d. (2a.) each.

Report on the Administration of Civil Justice in the Lower Provinces of Bengal during the year 1903. Foolscap. Paper cover. Re. 1 or 1s. 6d. (3a.)

Scientific Memoirs by Officers of the Medical and Sanitary Departments of the Government of India on the Morphology, Teratology and Declinism of the Flowers of Cannabis By Major D. Prain, M.B., I.M.S. New series, No. 12. Super-Royal 4to. Limp cover. 14a. 1s. 4d. (3a.)

Quarterly List of Officers in the Departments of the Government of India, October to December 1904, January to March 1905. Foolscap. Paper cover As. 4 or 5d. (1a.)

Annual Report of the Sanitary Commissioner with the Government of India, 1903, with Appendices and Returns of sickness and Mortality among European Troops, Native Troops and Prisoners in India for the year. Foolscap. Board. Rs. 3 or 4s. 6d. (8a.)

Report of the Indian Police Commission, 1902-03. Foolscap. Board. With appendices Re. 1-8a. (7a.); without appendices, Re. 1-8a. (7a.)

DEPARTMENT OF REVENUE AND AGRICULTURE.

Report of the Chief Inspector of Mines in India for the year ending 31st December 1903. Foolscap. Board. As. 12 or 1s. 2d. (2a.)

Review of Forest Administration in British India for the year 1902-03. Foolscap. Paper cover. Re. 1-11 or 2s. 6d. (3a.)

Annual Administration Report of the Civil Veterinary Department in India for the official year 1903-04. Foolscap. Paper cover. 12a. or 1s. (2a.)

Records of the Botanical Survey of India, Vol. IV, No. I (An Epitome of the British Indian Species of impatients by Sir J. D. Hooker, G.C.S.I., C.B., F.R.S. Part I. Royal 8vo. Paper cover. 3a. or 4d. (1a.)

Records of the Botanical Survey of India. Vol III, No. 2. The vegetation of the districts of Hughli, Howrah and the 24-Parganas, by D. Prain, Esq. Re. 1-12, or 2s. 8d. (3a.)

Rules framed under section 20 of the Indian Mines Act, 1901 (VIII of 1901) prescribing the Compulsory submission of Annual returns of output and labour of Indian Mines. Foolscap. 0-0-6. (1a.)

Rules for the Lease or Sale of Waste Lands in India. 1904 edition. Foolscap. Board. Rs. 4 or 6s. (8a.)

Archæological Survey of India. Annual Report, 1902-03. Super-Royal. Cloth. Rs. 20 or £1 10s. (Re. 1 2s.)

Annual Report of the Board of Scientific Advice for India for the year 1903-04. Foolscap. Paper cover. 6a. or 7d. (2a.)

List of Officers in the Department of Revenue and Agriculture, Government of India, and the Departments subordinate to it; corrected to 1st January 1905. As. 8 or 8d. (2a.)

FOREIGN DEPARTMENT.

Report on the Political Administration of the Territories within the Central India Agency for 1902-03. Foolscap Board. Re. 1 or 1s 6d. (3a.)

Report on the Administration of the Civil and Military Station of Bangalore for the year 1902-03. 8a. or 9d. (2a.)

Report on the Administration of Berar for the year 1902-03. Foolscap. Board. Re. 2 or 3s. (2a.)

Report on the Administration of the Civil and Military Station of Bangalore for the year 1903-04. Foolscap. Limp cover. 8a. or 9d. (2a.)

FINANCE DEPARTMENT.

Report on the Administration of the Mint at Bombay and Calcutta for the year 1903-04. Foolscap. Paper cover. Re. 1 or 1s. 6d (2a.)

Statistics Compiled from the Finance and Revenue Accounts of the Government of India. Receipts and Disbursemets of Home and Indian Accounts from 1st April 1805 to 31st March 1903. Foolscap. Board. Rs. 2 or 3s. (9a.)

List of Officers in the Finance and Commerce Department, corrected to 31st October, December 1904, January and February 1905. Royal 8vo. Paper cover. 4a. or 5d. (1a.)

COMPTROLLER-GENERAL.

Finance and Revenue Accounts of the Government of India for the year 1903-04. Foolscap. Board. Rs. 2. or 3s. (8a.)

STATISTICAL DEPARTMENT.

Statistics of Cotton Spinning and Weaving in the Indian Mills in June 1904 and in the three months, April to June 1904, compared with the corresponding period of 1902 and 1903, No. 5 of 1904-05. Royal 8vo. Stitched. 2a. or 2d. (1a.) each.

Trade and Navigation Accounts of British India for the months of August, September and October 1904. Nos. 5, 6 and 7 of 1904-05. Royal 8vo. Stitched. 8a. or 9d. (2a.) each.

Accounts of the External Land Trade of British India for the months of June, July and August 1904, Nos. 3, 4 and 5 of 1904-05. Royal 8vo. Stitched. 8a. or 9d. (2a.) each.

Statistics of Cotton Spinning and Weaving in the Indian Mills in July, August, September, October, November, December 1904. Royal 8vo. Stitched. 2a. or 2d. (1a.) each.

Judicial and Administrative Statistics of British India for 1902-03 and preceding years. 8th issue. Foolscap. Board. Rs. 2 or 3s. (10a.)

Accounts of the French Possessions in India in the year ending 31st March 1904 and the four preceding years. Foolscap. Paper cover. 2a. or 2d. (1a.)

Accounts of the Trade of Aden in the year ending 31st March 1904 and the four preceding years. Foolscap. Paper cover. 10a. (1a.)

Area and yield of certain principal crops in India. Sixth issue. Foolscap. Paper cover. 5a. or 6d. (2a.)

Sea-Borne Trade and Navigation, Accounts of British India for the months of November, December 1904, January 1905. Nos. 8, 9 and 10 of 1904-05. Royal 8vo. Stitched. 8a. or 9d. (2a.)

Accounts of the External Land Trade of British India for the month of September, October 1904. Nos. 6, 7 and 8 of 1904-05. oyal 8vo. Stitched. 8a. or 9d. (2a.)

Agricultural Statistics of India for the years 1898-99 to 1902-03 in two Volumes. Foolscap. Board. Both Volumes. Rs. 3-8a. or 5s. 3d. (12a.)

Accounts relating to the trade carried by Rail and River in India in the quarter ending June 1904, compared with the corresponding period of the years 1902 and 1903. No. 1 of 1904-05. Foolscap. Paper cover. 8a. or 9d. (3a.)

Financial and Commercial Statistics of British India, II issue, 1904. Super-Royal, Paper cover. Rs. 4 or 6s. (12a.)

Tariff Shcedules, 1905. Royal 8vo. Stitched. 6a. or 7d. (1a.)

Annual Statement of the Coasting Trade and Navigation of British India in the year ending 31st March 1904. Super-Royal. Board. Rs. 2 or 3s. (7a.)

ACCOUNTANT-GENERAL.

History of Services of Gazetted and other Officers serving under the Government of Bengal. corrected to 1st July 1904. In two parts. Royal 8vo. Board. Rs. 5 or 7s. 6d. (12a.)

MILITARY DEPARTMENT.

Return of Wreck and Casualties in Indian Waters, 1902-03. Foolscap. Board. Re. 1 or 1s. 6d. (3a).

Class Hand Books for the Indian Army—Mappillas or Moplahs, by Major P. Holland Pryor. Royal 8vo. Board. Re. 1-4 or 1s. 11d. (5a.)

Hand Book for the Indian Army—Jats, Gujars, and Ahirs, by Major A. H. Bingley. Royal 8vo. Board. Re. 1 or 1s. 6d. (5a.)

Classified List and Distribution Return of the Establishment of the Military Works Services corrected up to 31st December 1904. Royal 8vo. Paper cover. 4a. or 5d. (1a.)

RAILWAY BOARD

Administration Report of the Telegraph Department for 1903-04. Foolscap. Paper cover. 8a. or 6d. (2a.)

Public Works Department Classified List of the Subordinate Establishment, corrected to 30th June 1904. Royal 8vo. Paper cover. 4a. or 5d. (1a.)

Public Works Department Classified List and Distribution of Establishment corrected up to 31st December 1904. Super-Royal 8vo. Paper cover. Rs. 2 or 3s. (4a.)

Selections from the Records of the Government of India in the Pubilc Works Department, No. CCXXXVIII.—Relative Merits of Broad and Metre Gauge Lines of Railway. Foolscap. Board. 4a. or 5d. (1a. 6p.)

Classified List of the Subordinate Establishment corrected up to 31st December 1904. Royal 8vo. Paper. 4a. or 5d. (1a.)

List of new books for sale at Thomason College, Roorkee which were not advertised before.

Roorkee Treatise on "Railways," 4th Edition, revised by F. Wolly Dod, F.C.H. Price, Rs. 3 per copy.

Roorkee Treatise on "Irrigation Work." By Lieutenant-Colonel J. Clibborn, I.S.C., R.A., L.C.E., C.I.E. Price, Rs. 9 per copy.

Roorkee Treatise on "Sanitary Engineering." Compiled by Lieutenant-Colonel J. Clibborn, I.S.C., R.A., L.C.E., C.I.E. Price, Rs. 4-8 per copy.

Roorkee Manual of "Applied Mechanics," Volume II. The stability of structures mostly by graphic methods, by Lieutenant-Colonel J. H. C. Harrison, R.E. Price, Rs. 6-2 per copy.

Roorkee Manual of Hydraulics Price per copy, Re. 1-4. (No. XIX, Elementary Treatise.) By E. F. Tipple, Esq., R.A.

Designs for Wooden Bridges, together with rules for calculating the area of waterway, etc., and Plates. By late Rai Bahadur Kunhya Lal. Price per set, Rs. 4-2

Pamphlet on Examination for Acid Radicals: Tables giving Analysis of Acids. Price per copy, 8a.

Pamphlet on Examination for Acid Bases: Tables giving Analysis of Metallic Bases. Price, 8a. per copy.

List of New Books available for sale in the College Book Depot.

Roorkee Treatise on Civil Engineering, Section XIII. Drawing for Engineer students, Part I. By Major E. H. deV. Atkinson, R.E., Principal, Thomason College, Roorkee. Price per copy Rs. 3-2, including packing, postage, etc.

Hand-Book of the Thomason Engineering College, Roorkee, Illustrated. Price Rs. 6-12 per copy, including packing, postage, etc.

A list of new books and periodicals for sale at the Library of the Asiatic Society of Bengal, 57 Park Street, Calcutta.

SOCIETY'S PUBLICATIONS.

Proceedings Nos. 9 and 10, at 8a.

BIBLIOTHECA INDICA.

Chaturvarga Chintamani. Vol. IV, Fasc. 3, at 6a.
Catasahasrika Prajnaparamita. Vol. II, Fasc. 9, at 6a.
Mahabhasyaprodipoddyota. Vol. III, Fasc. 1, at 6a.
Suddhi Kaumudi. Fasc. 3, at 6a.
Vidhana Parijata. Vol. I, Fasc. 7, at 6a.

List of books published by the Meteorological Department from 1st October 1904 to 31st March 1905.

Monthly Weather Review, April to September 1904. (Illustrated by 6 plates.) Quarto. Paper cover, Re. 1 per month.
Indian Meteorological Memoirs, Vol. XVI. Part II. By Sir John Eliot. Quarto. Paper cover. Rs. 3.

List of Books published by the Meteorological Department during the current quarter.

Monthly Weather Review, October 1904. (Illustrated by 6 plates.) Quarto, Paper cover. Re. 1.
Indian Meteorological Memoirs, Vol. XVI, Part II. By Sir John Eliot. Quarto. Paper cover. Rs. 3.
Annual Summary of the Monthly Weather Review, 1903. (Illustrated by 6 plates.) Quarto. Paper cover, Rs. 3.
Monthly Weather Review, November 1904. (Illustrated by 6 plates.) Quarto. Paper cover. Re. 1.
Monthly Weather Review for December 1905. (Illustrated by 6 plates.) Quarto. Paper cover. Re. 1.

List of new books published by the Geological Survey of India during the week endin, 22nd April 1905.

Records of the Geological Survey of India, Vol. XXXII, Part II. Re. 1.
Memoirs of the Geological Survey of India Palæontologia Indica. New Series. Vol. II. Memoir No. 2. Re. 1.

APPENDIX TO

The Calcutta Gazette.

WEDNESDAY, JUNE 21, 1905.

NOTICES TO MARINERS.

THE following Notices are published for general information.

W. A. INGLIS,
Secretary, Marine Department.

CALCUTTA, *the 17th June 1905.*

ARABIA, NORTH-EAST COAST—PERSIAN GULF.

Caution—Position of a large overturned native boat.

No. 204 (first publication).—His Britannic Majesty's Vice-Consul at Bushire reports that information has been received from the Commander of the R.M.S. *Goalpara* that at 6-30 A.M. on the 28th May 1905, when about 8 miles N. N. W. of Ras Rakkim, approximate position lat 26° 18′ N., long 50° 21′ E., he passed a large native boat bottom up. Mariners are hereby warned.

KOREAN ARCHIPELAGO—QUELPART ISLAND.

A shoal patch to the southward.

No. 205 (first publication).—The British Admiralty has given notice (No. 402 of 1905) that a shoal patch of sand and coral, having over it a depth of 5¼ fathoms, has been found off the south coast of Quelpart island, in a position from which the north point of Mahon island bears N. E. ¾ N., distant 1¼ miles, and the north point of Burnet island N. W. ¾ W.

Approximate position, lat. 33° 12¼′ N., long. 126° 34¾′ E.

(Variation 4° Westerly in 1905.)

This Notice affects the following Admiralty Chart:—Korean Archipelago, southern portion, No. 104: Also, Sailing Directions for Japan, &c. 1904, page 89.

AFRICA, EAST COAST—DELAGOA BAY.

Cutfield flats—Wreck to the eastward.

No. 206 (first publication).—The British Admiralty has given notice (No. 403 of 1905) that the wreck of the barque *Magwen*, a mast of which shows above high water, lies sunk in a position about three miles to the eastward of the central part of Cutfield flats, with the beacon on Cutfield hummock bearing N. 19° W., distant about ten miles.

Approximate position, lat. 25° 41′ S., long. 32° 58′ E.

(Variation 20° Westerly in 1905.)

This Notice affects the following Admiralty Charts:—Delagoa Bay to river Zambesi, No. 648; Tugela river to Delagoa bay, No. 2089; Delagoa bay, No. 644: Also, Africa Pilot, part III, 1897, page 191.

JAPAN—NIPON ISLAND, EAST COAST.

Katsuura wan—Rock reported in approach.

No. 207 (first publication).—The British Admiralty has given notice (No. 408 of 1905) that the Master of the British steamship *Khalif* reports having struck on an uncharted rock, situated with Hachiman zaki, the eastern point of Katsuura wan, bearing N. 32° E., distant 2½ miles.

The vessel was drawing 18½ feet at the time; this danger has, therefore, been placed on the Charts as a rock with three fathoms over it. Its situation must be considered doubtful, and it is probable that it is somewhat closer inshore where the soundings are shown to be very irregular on this line of bearing on the plan of Katsuura wan, No. 8163.

Approximate position, lat. 35° 5¾′ N., long. 140° 17½′ E.

(*Variation 4° Westerly in 1905.*)

This Notice affects the following Admiralty Chart:—Tokyo to Sendai bay, No. 3334: Also, Sailing Directions for Japan, &c., 1904, page 387.

JAPAN—NIPON ISLAND, NORTH-WEST COAST.

Noto peninsula—Light established at Fukura.

No. 208 (first publication).—The British Admiralty has given notice (No. 411 of 1905) that on the 18th March 1905, a *white fixed* light, elevated 66 feet above high water and visible in clear weather from a distance of 5 miles between the bearings of N. 28° E., through east, and S. 26° E. would be established on the south side of the entrance to Fukura.

The light-house is a square wooden building, 16 feet in height, painted white.

Approximate position, lat. 37° 4¾′ N., long. 136° 43′ E.

(*Variation 5° Westerly in 1905.*)

This Notice affects the following Admiralty Chart:—Noto peninsula, No. 2243: Also, List of Lights, part VI, 1905, page 187; and Sailing Directions for Japan, &c., 1904, page 656.

JAPAN SEA—KOREA, EAST COAST.

Gensan bay—Wreck.

No. 209 (first publication).—The British Admiralty has given notice (No. 412 of 1905) that the wreck of the S.S. *Goyō maru*, showing a spar about 3 feet above high water, lies sunk in the western part of the Gensan bay, in a position from which the outer end of the wharf at the Japanese settlement bears S. 5° W., distant 4$\frac{1}{10}$ cables, and the summit of Chotoku to S. 51° E.

Approximate position, lat. 39° 11¼′ N., long. 127° 25½′ E.

(*Variation 5° Westerly in 1905.*)

This Notice temporarily affects the following Admiralty Chart:—Port Lazaref and Yung Hing bay, No. 3037: Also, Sailing Directions for Japan, &c., 1904, page 136.

NEW ZEALAND.—NORTH ISLAND—GREAT BARRIER ISLAND.

Port Abercrombie—Rock west of Sugar Loaf island.

No. 210 (first publication).—The British Admiralty has given notice (No. 414 of 1905) that a rock, with a depth of about 2 fathoms over it, exists in the entrance to port Abercrombie, in a position from which Sugar Loaf island bears E. by N. ½ N., distant about 2½ cables and the west extreme of Peter island S.E.

Approximate position, lat. 36° 9½′ S., long. 175° 18¼′ E.

(*Variation 14° Easterly in 1905.*)

This Notice affects the following Admiralty Chart:—Great Barrier island, ports and anchorages, No. 2559: Also, New Zealand Pilot, 1901, page 118.

EASTERN ARCHIPELAGO.—BORNEO, WEST COAST.

Palo river entrance—Buoys withdrawn.

No. 211 (first publication).—With reference to notice to Mariners No. 16, dated the 16th January 1904, issued by this office, the British Admiralty has given notice (No. 415 of 1905) that the two white conical buoys and the two black can buoys marking the fairway into Palo river have been withdrawn and will not be replaced.

Approximate position, lat. 1° 48′ N., long. 109° 14′ E.

This Notice affects the following Admiralty Chart:—South Natuna islands, No. 2104: Also, China Sea Directory, vol. II, 1899, page 44; and Supplement, 1901, page 4.

CHINA, SOUTH-EAST COAST—BREAKER POINT.

Masts of a certain wreck no longer visible—Buoy removed.

No. 212 (first publication).—With reference to Notice to Mariners No. 371, dated 14th November 1903, issued by this Office, the British Admiralty has given further notice (No. 420 of 1905) that the masts of the wreck, which lies sunk in a position from which Breaker point bears N. 82° W., distance 15 miles, are no longer visible, but that the wreck is doubtless still a danger to navigation.

Also, that the buoy, temporarily placed to mark the position of the wreck, no longer exists.

Approximate position, lat. 22° 54′ N., long. 116° 45½′ E.

(Variation Nil in 1905.)

This Notice affects the following Admiralty Charts:—China sea, northern portion, No. 2661b; Hong-Kong to gulf of Liau-tung, No. 1262; Formosa island and strait, No. 1968; Hong-Kong to the Brothers, No. 1962: Also, China Sea Directory, vol. III, 1904, page 145.

AUSTRALIA—TORRES STRAIT—NEW GUINEA (SOUTH-WEST COAST).

Merauke—Light established.

No. 213 (first publication).—The British Admiralty has given notice (No. 423 of 1905) that a *white group occulting* light *every thirty seconds*, thus:—light, *fifteen seconds*; eclipse, *three seconds*; light, *three seconds*; eclipse, *three seconds*; light, *three seconds*; eclipse, *three seconds*, has been established at Merauke, south-west coast of New Guinea.

The light is of the 4th order. It is shown, at an elevation of 75 feet above high water, from a white framework structure, 65 feet in height, and is visible in clear weather from a distance of 13 miles between the bearings of N. 35° W., through north and east, and S. 53° E.

Approximate position, lat. 8° 28½′ S., long. 140° 21½′ E.

(Variation 3° Easterly in 1905.)

This Notice affects the following Admiralty Chart:—Western approaches to Torres straits, No. 447: Also, List of Lights, part VI, 1905, page 255; Australia Directory, vol. II, 1898, page 551; and Australia Directory, vol. III, 1895, page 51.

EASTERN ARCHIPELAGO—SUMATRA, WEST COAST.

Pasir islets—Shoals to the northward.

No. 214 (first publication).—The British Admiralty has given notice (No. 424 of 1905) that a small rock, with a depth of 11 feet over it, has been found to the northward of the Pasir islets, in a position from which on Admiralty Chart No. 2760 the east extreme of Pasir Besar islet bears south, distant 4 cables, and the south extreme of tanjong Selung N. 55° W.

The undermentioned shoals appear on the latest edition of the Netherlands Government Chart of this locality, in the positions on Admiralty Chart No. 2760, as follows:—

a. A shoal, with a depth of 4 feet over it, situated 3½ cables North from the western extreme of Pasir Kechil islet, in the position of the 1½ fathom shoal now shown on the Chart.

b. A shoal, with a depth of 2½ fathoms over it, situated 3½ cables N. 28° W. from the western extreme of Pasir Kechil islet and N. 67° E. from the eastern extreme of Pasir Besar islet.

Approximate position of Pasir Besar islet, lat. 4° 37′ N., long. 95° 34′ E.

(Variation 1° Easterly in 1905.)

This Notice affects the following Admiralty Chart:—Plan of Rigas bay on Chart No. 2760: Also, China Sea Directory, vol. I, 1896, page 262.

AUSTRALIA.

Regulations regarding Target practice.

No. 189 (second publication).—The British Admiralty has given notice (No. 372 of 1905) that information has been received from the Government of the State of Victoria that The Commonwealth Defence Act, 1903, part 6, contains the following sections:—

71. The officer in charge of any artillery or rifle range may stop all traffic during artillery or rifle practice on any road or waterway crossing the line of fire, or in dangerous proximity thereto.

72. No ships, boats, or persons shall come, or remain within the prescribed distance of any ship, battery, gun, or person engaged in artillery or rifle practice, or shall remain in any position so as to obstruct such practice.

The Defence Authorities have also given Notice that all forts from which practice is carried on will fly a red flag from the masthead of the flagstaff. All ships and boats should be kept at a distance of at least 800 yards to the left and one mile to the right of the line of fire from a distance of 6,000 yards from the battery in accordance with part 6, No. 20, of the above Act.

This Notice affects the following Admiralty Chart:—Australia Directory, vols. I, II, and III, chapter I.

AUSTRALIA, SOUTH—Port Adelaide River.

Decreased depths in approach.

No. 190 (second publication).—The British Admiralty has given notice (No. 373 of 1905) that recent soundings show that the depths in the vicinity of the soundings of 4 fathoms shown on the Chart at a distance of 13 cables N. 33° W. from Wonga shoal light-house have decreased by about 6 inches. A note to this effect has been placed on the Charts. Vessels of deep draught should give it a wide berth when near low water.

Approximate position, lat. 34° 49′ S., long. 138° 26′ E.

(*Variation 5° Easterly in 1905*)

This Notice affects the following Admiralty Chart:—Port Adelaide, No. 1752: Also Australia Directory, Vol. I, 1897, page 326.

AUSTRALIA, SOUTH—Spencer Gulf.

Germein bay, Port Pirie approach—Beacon established.

Secret rock—Buoy established.

No. 191 (second publication).—The British Admiralty has given notice (No. 375 of 1905) that the following beacon and buoy have been established to mark the undermentioned shoals in Spencer gulf:—

Germein bay.—The three feet shoal, situated at a distance of $6\frac{1}{10}$ miles N. 8° W. from the northern point of Jarrold point, has been marked by a black pile beacon, surmounted by a circular-shaped red topmark, erected in the centre of the shoal.

Approximate position, lat. 33° 9½′ S., long. 137° 48½′ E.

Also, that Secret rock in the northern approach to port Lincoln has been marked by a black buoy, surmounted by a staff and diamond-shaped top-mark, moored in a depth of 18 feet on its eastern edge.

Approximate position, lat. 34° 31½′ S., long. 136° 7½′ E.

(*Variation 5° Easterly in 1905.*)

This Notice affects the following Admiralty Charts:—St. Vincent and Spencer gulfs, No. 2389b; Wood point to Lowly point, No. 403. Also, Australia Directory, Vol. I, 1897, pages 254, 199; and Supplement, 1900, page 13.

EASTERN ARCHIPELAGO—Sumatra, West coast.

Pulo Marak.—Non-existence of bank.

No. 192 (second publication).—The British Admiralty has given notice (No. 378 of 1905) that the bank of 6 fathoms shown on the charts at a distance of 6 cables S. 73° W. from Ujong Sarang, Burung, Pulo Marak, has been erroneously placed in that position, and does not exist; it should therefore be expunged from the charts.

Approximate position, lat. 1° 12½′ S., long. 100° 19′ E.

(*Variation Nil in 1905.*)

The Notice affects the following Admiralty Chart:—Ujong Masang to Ujong Indrapura, No. 709: Also, China Sea Directory, vol. I, 1896, page 297; and Supplement, 1899, page 20.

EASTERN ARCHIPELAGO—SUMATRA, NORTH COAST.

Jambu Ayer or Diamond point. Light established.

No. 193 (second publication).—With reference to Notice to Marines No. 123, dated the 15th April 1905, issued by this office, the British Admiralty has given notice No. 380 of 1905 that a *white flashing* light *every five seconds*, elevated 87 feet above high water, and visible in clear weather from a distance of 15 miles, has been established in a screw pile structure, erected in a depth of 9 feet on the sand spit projecting from Jambu Ayer or Diamond point. The light is of the 4th order, the duration of the flash being under one-tenth of a second.

Approximate position, on Chart 219, lat. 5° 16¾′ N., long. 97° 29¼′ E.

This Notice affects the following Admiralty Charts:—Bay of Bengal, No. 70; Bassein river to Pulo Penang, No. 830; Acheh head to Tyingkok bay, No. 2760; Malacca strait, No. 1355; Acheh head to Diamond point, No. 219: Diamond point to Pulo Berhala, No. 1353: also List of Lights, Part VI, 1905, page 63; and China Sea Directory, Vol. I, 1896, page 65.

BRITISH EMPIRE.

Caution when approaching British ports.

No. 194 (second publication).—The British Admiralty has given notice (No. 381 of 1905) that The Lords Commissioners of the Admiralty having taken into consideration the fact that circumstances may arise in which it might be necessary on account of periodical exercises, manœuvres, or otherwise, to forbid all entrance to the naval ports at night, this is to give Notice that on approaching the shores of Great Britain, or any British dependency, if search-lights are observed to be in constant operation, the naval harbours should be approached with great caution, as it may be apprehended that obstructions may exist outside the port, or that the entrances may altogether be closed, and the examination service may be in force.

To signify that an entrance is closed, three *red* vertical lights will be exhibited in some conspicuous position in or near the approach to a port, and as far as possible Notice of the act will be given by "look-out" vessels in the offing.

JAPAN—KOREA STRAIT—TSU SIMA

Oguchi Sao Zaki Mitsu shima—Rocks in the vicinity.

No. 195 (second publication).—The British Admirably has given notice (No. 383 of 1905) of the existence of the undermentioned rocks in the following position off Tsu sima:—

a. OGUCHI, IMA HARU BAY. A rock, with a depth of 4½ fathoms over it, situated at a distance of 5¾ cables N. 70° E. from Observatory rock. This rock has been marked on its northern side by a red conical buoy surmounted by a triangular topmark.

A rock, with a depth of 4½ fathoms over it, situated at a distance of 5½ cables N. 75° E. from Observatory rock. This rock has been marked by a red cask buoy surmounted by a triangular topmark.

The depth on Naku zone immediately to the westward of the above rocks is 3¾ fathoms, not 4½ fathoms, as shown on the Charts.

Approximate position, Observatory rock, lat. 34° 19′ N., long. 129° 13½′ E.

b. SAO ZAKI. A rock, with a depth of 4 fathoms over it, to the northward of Sao zaki, situated in a position from which the western extremity of Sao zaki bears S 58° W., distant 8½ cables, and the 965 feet hill S. 47° E.

Approximate position, lat. 34° 39¾′ N., long. 129° 20′ E.

At a distance of a quarter of a cable to the northward of this rock there is another head with a depth of 4½ fathoms over it.

c. TOYO WAN. A rock, with a depth of 2¾ fathoms over it, is situated in the approach to Toyo wan, north end of Tsu sima, in a position from which Mitsu shima light bears N. 48° W., distant 1$\frac{8}{10}$ miles, and Kajiga zone △S. 29° W.

Approximate position. lat. 34° 42¾′ N., long. 129° 28½′E.

There is a rocky patch, with a depth of 3¼ fathoms over it, situated at a distance of 1$\frac{2}{10}$ cables N. 41° E from this rock; the ground between these two heads is foul.

(Variation 4° Westerly in 1905.)

This notice affects the following Admiralty Chart:—Western coasts of Kiusiu, etc., No. 358; Korean archipelago, No. 104; Fusan harbour to port Hamilton, No. 3366; Tsu sima No. 2385; Tsu sima sound No. 2710: Also Sailing Directions for Japan 1904, pages 123, 122, 124.

JAPAN—Honshu—Rikuoku gulf.

Amori.—Wreck in anchorage.

No. 196 (second publication).—The British Admiralty has given notice (No. 384 of 1905) that the wreck of the S.S. *Chitose Maru* with two masts above water lies sunk in Aomori anchorage, in a position from which the pier end bears S. 11° E., distant 2¼ cables, and the north-western angle of the railway station wharf N. 87° W. The wreck is marked by a red flag by day and a *red fixed* light by night.

Approximate position, lat. 40° 50½′ N., long. 140° 44¾′ E.

(Variation 5° Westerly in 1905.)

This notice affects the following Admiralty Chart:—Plan of Aomori anchorage on Chart No. 101: Also, Sailing Directions for Japan, 1904, page 687.

JAPAN—Naiki (Inland sea).

Shimonoseki strait (Simonoseki) strait—Buoyage altered.

No. 197 (second publication).—The British Admiralty has given notice (No. 387 of 1905) that in the course of a few days the following alterations would be made in the buoyage of Simonoseki strait.

Light buoys established.

Eastern entrance:—

a. A black light-buoy, marked "Manjushima," and exhibiting a *white fixed* light, would be established on the northern side of the eastern entrance, in a position from which the eastern extremity of Manjushima bears N. 11° W., distant 3½ cables, and Kushi zaki N. 85° W.

b. The red conical buoy on the south-eastern edge of the Naka no su, situated 10½ cables N. 25° E. from He saki light, would be replaced by a red light-buoy marked "Naka no su East No. 2," exhibiting a *red occulting* light *every six seconds*, thus:—light, *four seconds*; eclipse, *two seconds*.

c. The light-buoy on the north-eastern end of the Naka no su, situated 13 cables N. 27° E. from He saki lighthouse, would be marked "Naka no su East No. 1."

d. The black conical buoy, near the west end of Naka no su, situated at a distance of 13 cables N. 44° W. from He saki light, would be replaced by a black light-buoy exhibiting a *while fixed* light.

e. The red conical buoy marking Tobigasu, situated at a distance of 11¾ cables N. 42° W. from He saki light, would be replaced by a red light-buoy, exhibiting a *white occulting* light *every six seconds*, thus.—light, *four seconds;* eclipse, *two seconds*.

f. A black light-buoy, marked "Kanabuse," and exhibiting a *red fixed* light, would be established in a position from which Kanabuse beacon light bears South, distant 3½ cables, and Dan no ura light S. 66° W.

g. The can buoy marking the south-west end of Moji shoal, situated at a distance of 5 cables S. 23° E. from the observation spot Simonoseki, would be replaced by a light-buoy painted in black and white horizontal bands and exhibiting a *red occulting* light *every six seconds*, thus:— light, *four seconds;* eclipse, *two seconds*.

Approximate position, He saki light, lat. 33° 57½′ N., long. 131° 1′ E.

h. A black light-buoy, marked "Ganryu jima," would be established in a position from which the south-eastern extremity of Ganryu jima bears S. 45 W., distant 2½ cables, and Hane ishi N. 37° W.

Approximate position, lat. 33° 56½′ N, long. 130° 56′ E.

Western entrance:—

a. The red conical buey marking Ozo ne, situated at a distance of 1¼ miles S. 21° E. from Daiba hana light, would be replaced by a red light-buoy exhibiting a *red occulting* light *every six seconds*, thus:—light, *four seconds;* eclipse, *two seconds*.

b. The red conical buoy marking Kasa se, situated at a distance of one mile S. 8° E. from Daiba hana light, would be replaced by a light-buoy exhibiting a *white fixed* light.

c. The red conical buoy marking Toridashi, situated at a distance of 6½ cables S. 44° W. from Daiba hana light, would be replaced by a red light-buoy marked "Funaze," exhibiting a *white occulting* light *every six seconds*, thus:—light, *four seconds*; eclipse, *two seconds*.

Approximate position, Daiba hana light, lat. 38° 57′ N., long. 130° 52¼′ E.

(*Variation 4° Westerly in 1905.*)

This Notice affects the following Admiralty Charts:—Hirado no seto to Simonoseki strait; No. 127; Simonoseki strait to Maruyama saki, No. 3225; Simonoseki strait, Nos. 532 and 1578, Moji ko, No. 3114; Also, Sailing Directions for Japan, 1904, pages 498, 499, 500, 502, 504, 505, 506.

NEW ZEALAND—North island, west coast.

Kaipara bar beacons—Amended positions given.

No. 198 (second publication).—With reference to Notice to Mariners No. 134, dated 1st May 1905, issued by this office, the British Admiralty has given further notice (No. 395 of 1905) that the two beacons erected on the North Head, Kaipara harbour, are painted black with white bull's eyes, and that the rear beacon is situated at a distance of 5 cables N. 59° E., and the front beacon at a distance of half a cable S. 45° E. from the light-house and not in the positions described in the above Notice. These beacons in line N. 52° E. lead over the bar in a depth of 4½ fathoms at low-water springs.

Approximate position of light-house, lat. 36° 23′ S., long. 174° 8½′ E.

(*Variation 15° Westerly in 1905.*)

This Notice affects the following Admiralty Chart:—Kaipara harbour, No. 2614: Also, New Zealand Pilot, 1901, page 244.

INDIA, WEST—Bombay harbour.

Cross island reef—Beacon erected.

No. 199 (second publication).—The British Admiralty has given notice (No. 400 of 1905) that a stone cylindrical beacon, painted red, elevated about 13 feet above high water, has been erected on Cross island reef in a position from which South channel beacon bears S. 70° W., distant 360 yards, and Cross island flagstaff N. 14° E.

Approximate position, lat. 18° 56½′ N., long. 72° 51½′ E.

(*Variation Nil in 1905.*)

This Notice affects the following Admiralty Chart:—Bombay harbour, No. 2621; port of Bombay, No. 655: Also, West Coast of Hindustan Pilot, 1898, page 201; and Supplement, 1903, page 15.

JAPAN—Honshu (Nipon)—East coast.

Oginohama Ro (Sendai) light—Arc of visibility.

No. 200 (second publication).—With reference to Notice to Mariners No. 158, dated 14th May 1904, issued by this office, the British Admiralty has given further notice (No. 401 of 1905) that, on and after the 25th March 1905, the arc of visibility of the *red fixed* light on Kitsune ana Saki, Oginohama, would be altered to show from the bearing of S. 35° E., through east and north, to S. 55° W.

Approximate position, lat. 38° 22¾′ N., long. 141° 27′ E.

(*Variation 4° Westerly in* 1905.)

This Notice affects the following Admiralty Chart:—Plan of Oginohama on Chart No. 2216: Also, List of Lights, Part VI, 1905, No 1017; and Sailing directions for Japan, &c., 1904, page 393.

BAY OF BENGAL—Burma coast.

Akyab harbour—Lower Spit buoy replaced.

No. 201 (second publication).—With reference to Notice to Mariners No. 186, dated the 3rd June, issued by this office, a further telegraphic communication has been received from the Port Officer, Akyab, stating that the Lower Spit buoy has been replaced in position.

BAY OF BENGAL—Coromandel coast.

Ammapatam and Tondi ports—Buoys removed.

No. 202 (second publication).—The Presidency Port Officer, Madras, has given notice (No. 20 of 1905) that the Buoys marking the anchorages of the Ammapatam and Tondi ports will be removed from the 1st August 1905 as they are no longer required.

INDIA, WEST—Burma coast.

Murdeshwar—Date of removal of the Dart Rock buoy.

No. 203 (second publication).—With reference to Notice to Mariners No. 187, dated the 3rd June, issued by this Office, the Bombay Government has given further notice (No. 52 of 1905) that the Dart Rock buoy off Murdeshwar was removed for the South-West Monsoon on the 15th May 1905.

EASTERN ARCHIPELAGO—Java, north coast.

Korowelang—Rock buoy to be replaced by light buoy.

No. 176 (third publication).—The British Admiralty has given notice (No. 342 of 1905) that the red conical buoy surmounted by a ball, marking Korowelang rock, will be replaced by a light buoy exhibiting a *white occulting* light *every twenty seconds*, thus:—light, *ten seconds*; eclipse, *ten seconds*.

Approximate position, lat. 6° 48′ S., long. 110° 10′ E.

Further notice will be given when this alteration has been made.

This Notice affects the following Admiralty Chart:—Java, No. 1653: Also, Eastern Archipelago, Part II, 1904, page 106.

PACIFIC OCEAN—New Guinea, south coast—Aru islands—Dobbo harbour.

Tanjong Ular—Intended light.

No. 177 (third publication).—The British Admiralty has given notice (No. 343 of 1905), that it is intended to establish a *white group occulting* light showing groups of three eclipses *every thirty seconds*, thus:— light, *fifteen seconds*; eclipse, *three seconds*; light, *three seconds*; eclipse, *three seconds*; light, *three seconds*; eclipse, *three seconds* on Tanjong Ular, the north-western end of Wammer island, at the entrance to Dobbo harbour: the light, which will be of the 4th order, will be elevated 72 feet above high water, visible in clear weather from a distance of 14 miles and shown from an open ironwork support 42 feet high painted white.

Approximate position on plan on Chart No. 1460, lat. 5° 45′ S., long. 134° 11′ E.

Further notice will be given when this light has been established.

This Notice affects the following Admiralty Charts:—Eastern Archipelago, No. 942b: Australia, No. 3759a; Aru islands, No. 470; Dobbo harbour on No. 1460: Also, List of Lights, Part VI, 1905, page 87; and Eastern Archipelago, Part I, 1902, page 478.

EASTERN ARCHIPELAGO—Sumatra, west coast—Sambat bay.

Tanjong Bandar (Bundar)—Intended light.

No. 178 (third publication).—The British Admiralty has given notice (No. 344 of 1905) that it is intended to establish a *white group occulting* light showing groups of three occultations *every thirty seconds*, thus:—light, *fifteen seconds*; eclipse, *three seconds*; light, *three seconds*; eclipse, *three seconds*; light, *three seconds*; eclipse, *three seconds*, on Tanjong Bandar, Sambat bay: the light, which will be of the 4th order, will be elevated 49 feet above high water, visible in clear weather from a distance of 12 miles and shown from an open ironwork frame support, 42 feet high and painted white.

Approximate position, lat. 4° 49′ S., long. 103° 20′ E.

Further notice will be given when this light has been established.

This Notice affects the following Admiralty Charts:—Eastern Archipelago, No. 941a; China Sea, No 1263; Tyingkok isle to Sunda strait, No 2761; plan of Sambat bay on Chart No. 866: Also, List of Lights, VI, 1905 page 75; and China Sea Directory, Vol. I, 1896, page 314.

EASTERN ARCHIPELAGO—Sumatra, west coast.

Melabu, Tanjong Karang—Intended light.

No. 179 (third publication).—The British Admiralty has given notice (No. 345 of 1905) that it is intended to establish *a white group occulting* light showing groups of three occultations *every thirty seconds*, thus:—light, *fifteen seconds;* eclipse, *three seconds;* light, *three seconds;* eclipse, *three seconds;* light, *three seconds;* eclipse, *three seconds*, on Tanjong Karang, Melabu: the light, which will be of the 4th order, will be elevated 49 feet above high water, visible in clear weather from a distance of 12 miles, and shown from an open ironwork frame support, 42 feet high and painted white.

Approximate position, lat. 4° 7¾′ N., long. 96° 7′ E.

Further notice will be given when this light has been established.

This Notice affects the following Admiralty Charts:—Eastern Archipelago, No. 941a; China Sea, No. 1263; Acheh head to Tyingkok bay, with plan, No. 2760: Also, List of Lights, Part VI, 1905, page 75; and China Sea Directory, Vol. I, 1896, page 266.

BAY OF BENGAL—Straits Settlement and Malay peninsula.

Singapore—Standard Time—Time-balls altered.

No. 180 (third publication).—The British Admiralty has given notice (No. 346 of 1905) that on and after 1st June 1905 Standard time of the 105th meridian of East longitude will be adopted in the Straits Settlement and the Federated States in the Malay peninsula.

The time-balls at Fort Canning and Pulo Brani will consequently be dropped at 1ʰ 0ᵐ 0 P.M. Standard time of the 105th meridian, or 0ʰ 55ᵐ 25·1ˢ P.M. Singapore Observatory time, corresponding to 18ʰ 0ᵐ 0 Greenwich mean time.

Approximate position, lat. 1° 17′ N., long. 103° 51′ E.

This Notice affects the following Admiralty Charts:—Singapore road, No. 1995; Keppel harbour, No. 2023: Also, List of Time Signals, 1904, Nos. 35 and 36; and China Sea Directory, Vol. I, 1896, page 221.

BAY OF BENGAL—Andaman islands.

Port Blair—Leading lights established.

No. 181 (third publication).—The British Admiralty has given notice (No. 347 of 1905) that the undermentioned *white fixed* leading lights were established in port Blair:—

(*a*) Atlanta point.—A front light, elevated 70 feet above high water, has been erected on this point in a position from which the Port office jetty on Ross island bears N. 81° E. distance 8 3/10 cables, and the eastern extremity of Perseverance point N. 4° W.

The rear light is elevated 144 feet above high water, and is situated at a distance of 1½ cables S. 35° W. from the front light. The light power of the lights is about 70 candles. These lights in line S. 35° W. lead into the harbour.

(*b*) South point.—A front light, elevated 7 feet above high water, has been established on the end of the pier at this point, situated 7 cables S. 22° W. from the Port office jetty. The rear light is elevated 40 feet above high water, and situated at a distance of one cable S. 11° E. from the front light. The light power of the lights is about 35 candles. These two lights in line S. 11° E. lead from the line of the Atlanta point lights to the anchorage off Ross island.

All the above lights are exhibited from towers about 7 feet high and painted white.

Approximate position of Port office jetty, lat. 11° 40½′ N., long. 92° 46½′ E.

(*Variation Nil in 1905.*)

This Notice affects the following Admiralty Chart:—Port Blair, No. 514: Also, List of Lights, Part VI, 1905, page 61; and Bay of Bengal Pilot, 1901, page 311.

EASTERN ARCHIPELAGO—Sumatra, north-east coast.

Bedagei—Lights discontinued.

No. 182 (third publication).—The British Admiralty has given notice (No. 360 of 1905) that the two white fixed vertical lights formerly exhibited on the south side of the Bedagei river entrance have been permanently discontinued.

Approximate position, lat. 3° 30½′ N., long. 99° 13½′ E.

This Notice affects the following Admiralty Charts:—Malacca strait, No. 1355; and Diamond point to Pulo Berhala, No. 1353; Also, List of Lights, Part VI, 1905, No. 401; and China Sea Directory, Vol. I., 1896, page 86.

EASTERN ARCHIPELAGO—Borneo, east coast.

Balik Papan bay—No. 4 buoy to be replaced by light buoy.

No. 183 (third publication).—The British Admiralty has given notice (No. 364 of 1905) that the white conical buoy No. 4, on the eastern side of the entrance to the anchorage in Balik Papan bay, situated at distances of 7 cables S. 18° E. from Tokong, will be replaced by a light-buoy, painted white, exhibiting a *white occulting light every twenty seconds*, thus:—light, *ten seconds*; eclipse, *ten seconds*.

Approximate position of Tokong, lat. 1° 16′ S., long. 116° 48′ E.

(*Variation 2° Easterly in 1905.*)

This Notice affects the following Admiralty Chart:—Plan of Balik Papan bay on Chart No. 3031; Also, Eastern Archipelago, Part II, 1904, page 291.

PACIFIC OCEAN, SOUTH—Solomon islands—Pavuvu group.

Victoria shoal—Existence of.

No. 184 (third publication).—The British Admiralty has given notice (No. 366 of 1905) of the existence of a shoal, on which a depth of 9 fathoms was obtained, to the southward of Pavuvu group, in a position from which the extremity of cape Marsh bore N. 14° W., distant $5\frac{1}{10}$ miles, and the southern extremity of Allacon island N. 70° E.

This danger, which has been named Victoria shoal, is about a cable in extent, and appeared to have much less water than that given above on its southern edge.

Approximate position, lat. 9° 10′ S., long. 158° 59′ E.

(*Variation 8° Easterly in 1905.*)

This Notice affects the following Admiralty Chart.—Plan of Pavuvu islands on Chart No. 2355: Also, Pacific Islands, Vol. I., 1900, page 304.

CHINA SEA—Formosa (Taiwan).

Kelung harbour, closed—Pescadores islands—State of siege proclaimed.

No. 185 (third publication).—The British Admiralty has given notice (No. 367 of 1905) that Kelung harbour, Formosa, which had recently been closed to foreign shipping during the daytime, can now be entered, provided notice is given beforehand to the Naval Mine Department.

Approximate position, lat. 25° 8′ N., long. 121° 45′ E.

Also, that the Japanese Government have published an Ordinance declaring that from 13th April 1905 the port of Makyu (Makung) in the Pescadores islands and the neighbouring seas would be in a state of siege.

Approximate position of Makung, lat. 23° 31′ N., long. 119° 34′ E.

This Notice affects the following Admiralty Charts:—Kelung harbour, No. 2618; Pescadores islands, Nos. 1961 and 1338; Also, China Sea Directory, Vol. III, 1904, pages 259 213.

BAY OF BENGAL—Burma coast.

Akyab harbour—Certain buoys adrift.

No. 186 (third publication).—Telegraphic communications have been received from the Port Officer, Akyab, stating that the Lower Spit buoy as well as Saunder's shoal buoy have sunk. They will be replaced as soon as possible.

INDIA, WEST—Bombay coast.

Alibag and Bhatkal—Buoys removed for the S.-W. Monsoon.

No. 187 (third publication).—The Bombay Government has given notice (No. 49 of 1905) that the buoys on the west coast from Alibag to Bhatkal will be removed for the south-west Monsoon after 15th May 1905.

The dates of the removal of the buoys will be notified hereafter.

INDIA, WEST—Bombay coast.

Alleppey—Red and Black buoys removed.

No. 188 (third publication).—The Master Attendant at Alleppey has given notice dated the 20th May 1905 that the Red and Black buoys marking the anchorage at Alleppey have been removed and will probably be replaced about the 15th September 1905.

E. J. Beaumont, Comdr., R.I.M.,
Port Officer of Calcutta.

REGISTERED No. C209.]

No. 25 of 1905.

SUPPLEMENT TO

The Calcutta Gazette.

WEDNESDAY, JUNE 21, 1905.

OFFICIAL PAPERS.

[Non-Subscribers to the GAZETTE *may receive the* SUPPLEMENT *separately on payment of five rupees per annum if delivered in Calcutta, or seven rupees and eight annas if sent by post.]*

CONTENTS.

	Page.
RESOLUTION on the Report of the Sanitary Commissioner, Bengal, for the year 1904	897
Weather and Crop Report for the week ending the 19th June 1905	902
Prices-current (retail and wholesale) of food-grains and salt in the head-quarters station bazars of the districts of Bengal on the 15th June 1905	906
METEOROLOGICAL Report of the Province of Bengal for the month of May 1905	913
Table of Rainfall recorded at stations in Bengal in May 1905	914
Circular and Eastern Canals for the week ending Saturday the 17th June 1905	925
Results of the Meteorological Observations taken at the Alipore Observatory from 11th to 17th June 1905 ...	926
Weekly Return of Traffic Receipts on Indian Railways ...	927

RESOLUTION ON THE REPORT OF THE SANITARY COMMISSIONER, BENGAL, FOR THE YEAR 1904.

MUNICIPAL DEPARTMENT—SANITATION.

Darjeeling, the 17th June 1905.

RESOLUTION—No. 1186T.—M.

READ—

The Report of the Sanitary Commissioner, Bengal, for the year 1904.

MAJOR CLARKSON, I.M.S., was in charge of the office of Sanitary Commissioner throughout the year, but the report is written by Major Clémesha, I.M.S., who took over charge shortly after its close.

Climatic conditions.

2. Although the rainfall of the year was above the average, it was not well distributed, and the monsoon rains ceased much sooner than usual. This rendered the last quarter of the year very unhealthy. The prices of food-grains were on the whole lower than in the previous year.

Births.

3. The number of births registered was the highest on record, viz., 3,170,440, or 42·6 per thousand of the population of the Province according to the last census, excluding two small tracts where vital occurrences are not yet registered. The

increase, as compared with 1903, is attributed by the Sanitary Commissioner to the circumstance that the latter year was more healthy than 1902 and, in particular, that malaria was much less prevalent. This explanation may be accepted as accounting for the greater part of the increase. Some small portion of it may perhaps be due to the progressive improvement in registration, but the reporting of births and deaths has now reached such a degree of accuracy that this factor has become of comparatively small account. In his note on the age tables of the last census, Mr. Hardy calculated that the mean birth-rate in Bengal during the decade 1891—1901 was 43·9 per mille, which is only 1·3 more than that now reported. The officers of the Vaccination Department enquired into nearly half a million vital occurrences during the year and found that less than 1 per cent. had been omitted from the returns compiled at the police-stations. There are considerable variations in the figures reported from different parts of the Province; and whereas in the Burdwan and Presidency Divisions the reported birth-rate was less than 40 per mille, that of Chota Nagpur, with its healthy climate and prolific aboriginal population, approximated very closely on 50. The highest rate recorded in any district was that of Hazaribagh, which exceeded 56 per mille.

Deaths.

4. The total number of deaths reported was 2,415,423, or 32·4 per mille, compared with 33·3 per mille in 1903 and 33·4 in 1902. The diminution occurred chiefly under the head of cholera. The healthiest Division was Chota Nagpur with a death-rate of only 22·9 per mille. In the Burdwan, Orissa and Chittagong Divisions it was under 30; but in the Rajshahi, Patna and Presidency Divisions it exceeded 35 per mille. The vital statistics of towns will be dealt with in the Resolution on Municipal Administration. In discussing the seasonal incidence of mortality, the Sanitary Commissioner points out that the conditions of the different sub-Provinces are far from uniform. In Bengal Proper the healhiest months are June and July; in Bihar and Chota Nagpur, January and February; and in Orissa, September and October.

Infant mortality.

5. There was a further reduction in the rate of infant mortality, which was 187 per thousand births. This figure is still 55 per mille above the average of England and Wales, but it is not very much in excess of that in some of the mining and manufacturing counties. The Sanitary Commissioner summarizes in his report the result of the enquiries instituted by his predecessor regarding the causes of death of infants under one year of age. He considers that the bulk of the deaths result from illnesses due to improper food, insufficient clothing and other causes arising from the ignorance of the parents. The influence of malaria is also well marked; and while in some of the healthier districts, such as Singhbhum, Manbhum and the Sonthal Parganas, the infantile mortality is as low as, or lower than, the mean for England and Wales, in unhealthy districts like Jalpaiguri and Dinajpur it is from 30 to 40 per cent. above the Provincial average. In Captain Rogers's report on fever in Dinajpur, which will be referred to again further on, it is shown that of the mortality recorded under "Fever" in a thousand cases specially enquired into, no less than one-tenth were cases of infants "born feeble," and were due largely to the mothers having suffered from repeated attacks of malaria during pregnancy. The Lieutenant Governor doubts whether sufficient weight is given by the Sanitary Commissioner to the injurious effects of premature marriage and child-bearing. It has been found in Europe that the vitality of infants is greatest where the age of the mother is about 24 years, and that there is a marked rise in the mortality where her age is less than 20 years. Unskilful midwifery is responsible for a larger mortality than would appear from the number of still-births reported; the people have a prejudice against reporting still-births, and in such cases generally allege that the child was born alive and died a few days later. The Sanitary Commissioner is preparing a leaflet in Bengali and Hindi containing a few simple rules bearing on the rearing and care of children; and it is hoped that some good will result from its distribution—at least in Calcutta and some of the larger towns. The returns show that about 105 males are born to every 100 females; but the mortality amongst male infants is so much greater than amongst female, that about half of

this excess has already disappeared by the end of the first year of life. These results have their counterpart in Europe, but there the greater relative vitality of female infants is even more marked than it is in this country, where sons are so highly prized and are often more carefully tended than daughters.

Cholera.

6. The mortality from cholera was barely two-thirds that of 1903. The number of deaths registered was 137,701, or 1·85 per mille. In Bengal Proper cholera was more prevalent, especially in the eastern districts; but elsewhere there was a general improvement. This was most noticeable in the Patna Division, which had suffered severely in 1903, when the death-rates recorded in the Champaran and Shahabad districts were, respectively, 7·7 and 6·1 per mille. In no district has the mortality during 1904 approached these figures. The comparative immunity of Puri is highly satisfactory, and may perhaps be attributed to improved sanitary arrangements, especially as regards the water-supply. Only once in the last 20 years has Puri been so free from this disease as in 1904. Anti-cholera inoculation of coolies emigrating to Assam has recently been discontinued at the instance of the Chief Commissioner of that Province, who considered that the measure had not been of material effect in warding off the disease, while it tended to make emigration to Assam unpopular.

Small-pox.

7. After three years of unusual prevalence there was a fall in the mortality from small-pox, which, in the Province as a whole, was only 0·23 per mille. The death rate from this cause was highest in Jalpaiguri, where it was six times the Provincial average, while two of the three districts of Orissa, which usually suffer most, enjoyed comparative immunity. The Lieutenant-Governor has under his consideration proposals for reorganizing the Vaccination Department, and in particular for improving the status of the superior staff whose duty it is to see that the vaccinations reported have been effectively carried out.

Plague.

8. Plague first assumed serious dimensions in Bengal in 1900 when the number of deaths reported was 38,412. In 1901 this figure was more than doubled, but in the following year the mortality fell to 32,967; it rose to 65,680 in 1903 and in the year under review to 75,436. Nearly three-quarters of the total mortality in 1904 occurred in three districts—Patna, Shahabad and Saran—and more than one-third of it in Patna alone, where the plague death-rate stood at no less than 16 per mille. Outside eight districts of Bihar and the City of Calcutta, only 545 deaths from plague were reported; but in those districts the disease seems to have established itself firmly; and it has spread since the close of the year to Howrah. It is essentially a disease of crowded sites; and although nineteen-twentieths of the population live in rural areas, nearly one third of the plague mortality occurred in towns. The Sanitary Commissioner draws attention to the fact that 135 females died of plague to every 100 males, and attributes this circumstance to the fact that plague is a disease of the house, and attacks chiefly those who are most confined to it. The epidemic followed its usual course. It reached its climax in March, then rapidly declined until July, rose again in August, fell off in September and October, and once more rose steadily with the advent of the cold weather. The number of deaths from plague reported by the Sanitary Commissioner differs from that furnished in their weekly diaries by district officers who obtain their information through a slightly different agency. Orders are under issue providing for a comparison, month by month, of the two sets of returns, so that the differences between them may be ascertained and reconciled. It is sometimes said that many plague deaths are returned as due to fever, but this seems unlikely having regard to the fact that the mortality under this head is no greater than it used to be in the districts where plague is rife.

9. The preventive measures consisted chiefly of disinfection and the evacuation of infected houses. Inoculation is still viewed with suspicion, and makes but little progress. No mention is made in the report of rat destruction. This is now recognized as of great value, and it has been urged upon the Municipal authorities of Patna and other towns where plague has taken a firm

hold. The measures to be adopted for dealing with plague were considered in October 1904, at a Conference convened by the Lieutenant-Governor for the purpose, and the existing orders on the subject were passed in review. On the advice of this Conference the penal provisions of the plague regulations which had been issued under the Epidemic Diseases Act were abrogated; revised instructions were drawn up in which special emphasis was laid on the absolute importance of working with the people and of avoiding the least appearance of interfering with their rooted prejudices; and funds were placed at the disposal of Commissioners for expenditure on plague prevention and relief.

Fever.

10. No less than 1,655,198 deaths, or more than two-thirds of the total number, are attributed to "fever." The reporting agency is notoriously unfit to form an accurate diagnosis, and all but a few well-known diseases, such as cholera and small-pox, are classed indiscriminately under this head. Some light is thrown on the extent to which this occurs by Captain Rogers's researches in Dinajpur, from which it appears that, out of 1,000 reported deaths from fever, enquiry showed that more than one-fifth were really due to pneumonia, one-tenth to diarrhœa, one-ninth to phthisis, one-sixteenth to dysentery and one-fifth to other causes; while less than one-third were attributable to malarial fever. It must however be remembered that, even where malaria is not the immediate cause of death, it is frequently a predisposing cause, by weakening the constitution and rendering it unable to resist other diseases, particularly those of the respiratory system. According to the returns, the number of deaths from fever was about the same as in the previous year; but it would appear from more reliable sources of information that fever was really more prevalent during 1904; there was a considerable rise in the proportion of "fever" cases treated in the public dispensaries, and also in the number of admissions to the Police hospitals of constables suffering from malaria. The "fever" death-rate varies greatly in different parts of the Province; and whereas in Orissa it is only 12 and in Chota Nagpur 16 per mille, it rises to 24 in the Presidency and to 32 per mille in the Rajshahi Division. The highest rate reported is 38 per mille in Dinajpur. This district has long been exceedingly unhealthy; and accordingly, early in 1904, Captain Rogers was deputed to carry out the investigation, already alluded to, in that district and in Purnea. In the course of his enquiries he discovered that a large number of cases, hitherto regarded as of malarial origin, are in reality caused or complicated by a parasite of a different kind from that which produces malarial fever. It is not yet possible to say what will be the practical result of this discovery; but it can hardly fail to yield scientific results of great value.

The prevalence of malaria is now known to depend largely on the amount of stagnant water in *bils* and moribund rivers, which affords a breeding ground for the anopheles mosquito. The Lieutenant-Governor has recently sanctioned a project for draining an area of 290 square miles in the 24-Parganas at an estimated cost of Rs. 17,39,000; and two similar schemes in the Rajshahi and Pabna districts are under preparation. Much, however, can be done by less ambitious measures, such as the filling up of hollows, the clearing of drains, and the treating of stagnant pools with kerosine oil. The report shows what action was taken in this direction during 1904. Attention was concentrated mainly on certain jails; and it is stated that the result was "an appreciable decrease in the incidence of fever in them." The Sanitary Commissioner is preparing a note for the guidance of Municipalities describing the most practical methods of warding off malaria.

11. Great stress was laid by Captain Rogers on the value of quinine as a prophylactic; and it is satisfactory to observe that there was a considerable increase during the year in the sale of pice-packets, each of which now contains seven grains of quinine. Steps are being taken to increase the facilities for distribution by multiplying the number of depôts for the sale of these packets.

Dysentery and Diarrhœa.

12. The reported deaths from dysentery and diarrhœa numbered only 47,875, but Captain Rogers found that in the cases tested by him in Dinajpur only a very small part of the actual mortality from these diseases was correctly returned. There

are often unaccountable variations in the figures for adjoining districts; and whereas in Dinajpur the recorded mortality under this head was only ·03 per mille, in Jalpaiguri it was ·70. The Sanitary Commissioner is arranging to enquire into these discrepancies. The same unreliability attaches to the return of respiratory diseases, which is of no value whatever.

And respiratory diseases.

13. It has recently been arranged that station-masters shall report vital occurrences within railway limits, but the returns in some cases are clearly incomplete. It is for instance highly improbable that no births or deaths should have occurred during the year on railway premises in the districts of Shahabad and Singhbhum.

Vital statistics within railway limits.

14. Mention has already been made of three important drainage schemes which will shortly be carried out and of the measures taken in certain places to get rid of mosquitoes. In paragraph 62 of his report the Sanitary Commissioner enumerates some other important works which were carried out during the year. Much was done towards improving the water-supply by the construction of new tanks and wells and the cleansing of old ones. Progress was also made in improving the conservancy arrangements in towns; but the difficulties connected with the installation of septic tanks, which were mentioned in the Resolution on the Report for 1903, have not yet been wholly solved. An exhaustive enquiry was made by the Committee appointed to investigate the matter, and certain definite conclusions were arrived at, but a final settlement of the question must await the result of enquiries which are now being made for the purpose of ascertaining whether the effluent from the tanks can be bacteriologically purified by filtration through sand.

Sanitary improvements.

15. The report submitted by the Sanitary Board contains an account of the numerous water-supply and drainage projects which have engaged their attention during the year. To the former class belong the schemes for water-supply at Puri, Pabna, Khulna and Barisal. But the most interesting feature of the report is the evidence which it gives of the activity displayed by many Municipalities in Bengal in the preparation of drainage schemes. Reference is made to no fewer than fourteen such schemes; and many others are in contemplation. When these projects have been finally prepared and approved they will be carried out gradually as funds are available; and in this way it will be possible to secure that the Municipal money is expended to the best advantage. The detailed plans and estimates for the drainage of Puri and several other towns were prepared by an Assistant Engineer of the Public Works Department; but his services were available only for a limited time; and much still remains to be done. It is most important that these projects should be drawn up under closer expert supervision than the Sanitary Engineer has time to devote to them; and it has recently been proposed to give him an assistant for this purpose.

The Sanitary Board.

By order of the Lieutenant-Governor of Bengal,

E. A. GAIT,

Offg. Secretary to the Govt. of Bengal.

WEATHER AND CROP REPORT.

For the week ending the 19th June 1905.

Burdwan.—Rainfall at Sadar 0·16, Kalna 0·48, Katwa 0·50, Raniganj 0·09. Ploughing and sowing continue. Rain urgently wanted for the standing crops. Weather very hot. Fodder sufficient. Scarcity of water reported from Asansol. No cattle-disease. Common rice sells as follows :—

	Srs.	ch.	
Sadar	13	8	per rupee.
Kalna	12	5	
Katwa	13	12	
Raniganj	13	4	

Birbhum.—Rainfall at Sadar nil, Rampur Hât 0·20. Weather sultry. Sowing of paddy continues. Rain wanted for standing crops and sowing of paddy. Fodder and water sufficient. Common rice sells as follows :—

	Srs.	ch.	
Sadar	14	4	per rupee.
Rampur Hât	15	0	

Bankura.—Rainfall at Sadar 0·34, Vishnupur 0·10. Weather very hot. Paddy seedlings withering. Rain very urgently needed. No cattle-disease. Fodder and water sufficient. Common rice sells as follows :—

	Srs.	ch.	
Sadar	14	0	per rupee.
Vishnupur	15	0	

Midnapore.—Rainfall at Sadar 0·55, Tamluk 0·38, Ghatal 0·10. More rain wanted throughout the district. Ploughing and sowing of winter rice continue. cattle-disease reported from Dantan. Fodder and water sufficient. Common rice sells as follows :—

	Srs.	ch.	
Sadar	15	0	per rupee.
Contai	18	0	
Tamluk	13	8	
Ghatal	14	0	

Hooghly.—Rainfall at Sadar 0·24, Serampore 0·13, Arambagh 0·20. Weather very hot. Lands being ploughed for winter paddy. Weeding of jute still going on. No cattle-disease. Fodder and water sufficient. Common rice sells as follows :—

	Srs.	ch.	
Sadar	10	0	per rupee.
Serampore	11	1	

Howrah.—Rainfall at Sadar 0·09. Weather unbearably hot. Rain wanted for winter paddy seedlings and jute. Sugarcane thriving. Fodder sufficient. No cattle-disease. Common rice sells as follows :—

	Srs.	ch.	
Sadar	13	0	per rupee.
Ulubaria	13	8	

24-Parganas.—Rainfall at Sadar 0·36, Barasat 0·17, Barrackpore 0·10, Basirhat nil, Diamond Harbour 0·16. Weather hot and sultry. Weeding of early rice and jute continues. Standing crops suffering much from want of rain and seedlings are withering. Prospects fair. Condition of cattle good. Fodder and water sufficient. Common rice sells at 12 seers per rupee.

Nadia.—Rainfall at Sadar nil, Kushtia 1·28, Meherpur 1·01, Chuadanga 0·81, Ranaghat 0·29. Weather very hot. Weeding of early rice and jute going on in Kushtia. Summer rice is being reaped. Fodder and water sufficient. No cattle-disease. Common rice sells as follows :—

	Srs.	ch.	
Sadar	12	5	per rupee.
Kushtia	14	0	
Meherpur	11	0	
Chuadanga	12	0	
Ranaghat	13	0	

Murshidabad.—Rainfall at Sadar 0·30, Lalbagh 1·71, Jangipur 0·35, Kandi 0·05. Weather hot and cloudy. Prospect of standing crops good except at Jangipur where early rice has withered partially for excessive drought. Seedlings of winter rice growing. Cattle-disease reported from Nabagram. Fodder and water sufficient. Common rice sells as follows :—

	Srs.	ch.	
Sadar	13	0	per rupee.
Lalbagh	12	4	
Jangipur	14	0	
Kandi	14	0	

Jessore.—Rainfall at Sadar 0·86, Jhenida 0·46, Magura 1·38, Narail 0·29, Bangaon nil. Weather hot. Prospect of standing crops good. Fodder and water sufficient. Common rice sells as follows:—

	Srs.	ch.	
Sadar	14	0	per rupee.
Jhenida	12	12	
Magura	12	8	
Narail	13	5	
Bangaon	13	5	

Khulna.—Rainfall at Sadar 0·18, Satkhira nil, Bagerhat 0·76. Weather unusually hot. Sowing of autumn and winter rice (broadcast) estimated at 68 and 25 per cent. respectively. Cattle-disease reported from Baitaghata. Fodder and water sufficient. Common rice sells as follows:—

	Srs.	ch.	
Sadar	14	8	per rupee.
Satkhira	13	0	
Bagerhat	15	0	

Rajshahi.—Rainfall at Sadar 0·32, Naugaon 0·85, Nator 0·22. Weather cloudy, and excessively hot. All crops doing well. No cattle-disease. Fodder sufficient. Common rice sells as follows:—

	Srs.	ch.	
Sadar	15	0	per rupee.
Naugaon	13	8	
Nator	14	8	

Dinajpur.—Rainfall at Sadar 2·07, Thakurgaon 4·15, Balughat 0·99. Weather seasonable. Weeding of jute and *bhadoi* continue. No cattle-disease. Fodder and water sufficient. Common rice sells as follows:—

	Srs.	ch.	
Sadar	14	8	per rupee.
Thakurgaon	13	0	
Balughat	14	0	

Jalpaiguri.—Rainfall at Sadar 10·75, Alipur Duars 11·11. Weather hot and cloudy. Jute and autumn rice doing well. Lands are being prepared for winter rice. Fodder and water sufficient. Common rice sells at 13 seers per rupee.

Darjeeling.—Rainfall at Sadar 4·78. Weather seasonable. *Hills.*—Early rice, *chota mandua* and maize doing well. *Terai*—Condition of jute and early rice good. Common rice sells as follows:—

	Srs.	ch.	
Hills	9	0	per rupee.
Terai	13	0	

Maize sells at Darjeeling and Kalimpong at 12 and 13 seers per rupee respectively.

Rangpur.—Rainfall at Sadar 1·06, Kurigram 10·17, Gaibanda 2·00, Nilphamari 2·78. Weeding of jute going on vigorously. Prospect of jute unfavourable. Common rice sells as follows:—

	Srs.	ch.	
Sadar	13	0	per rupee.
Gaibanda	12	0	
Nilphamari	12	0	
Kurigram	14	0	

Bogra.—Rainfall at Sadar 2·09. Fall general. Weather cloudy. Weeding of early rice and jute and cultivation of winter rice going on. Condition of jute fair. Fodder and water sufficient. Common rice sells at 13½ seers per rupee.

Pabna.—Rainfall at Sadar 0·79, Sirajganj 2·87. Weather partially cloudy and very hot. Prospects of standing crops fair. Weeding of paddy and jute continues. Outturn of summer rice and tobacco normal. No cattle-disease. Fodder and water sufficient. Common rice sells at 12 seers per rupee.

Dacca—Rainfall at Sadar 0·82. Fall general. Prospects of crops good. Weather seasonable. Fodder available. No cattle-disease. Common rice sells as follows:—

	Srs.	ch.	
Sadar	14	0	per rupee.
Manikganj	12	0	
Munshiganj	13	0	
Narayanganj	13	0	

Mymensingh.—Rainfall at Sadar 6·00, Jamalpur 2·57, Kishorganj 3·38, Netrakona 3·04, Tangail 0·77. Weather seasonable. Condition of standing crops fair. Weeding of early rice and transplantation of winter rice continue. *Rabi til* doing well. Fodder and water sufficient. No cattle-disease. Common rice sells as follows:—

	Srs.	ch.	
Sadar	13	8	per rupee.
Jamalpur	15	0	
Kishorganj	14	0	
Netrakona	16	0	
Tangail	12	8	

Faridpur.—Rainfall at Sadar 1·02, Goalundo 0·42. Weather hot and cloudy. Prospects of crops good. Fodder and water sufficient. Common rice sells at 13 seers per rupee.

Backergunge.—Rainfall at Sadar 0·86. Fall general. No cattle-disease. Fodder sufficient. Common rice sells at 12¾ seers a rupee.

Tippera.—Rainfall at Sadar 4·85, Brahmanbaria 3·88, Chandpur 1·24. Weather seasonable. Prospects good. Sowing of winter rice going on. Fodder and water sufficient. Cattle-disease reported from thana Laksam. Common rice sells as follows :—

	Srs. ch.	
Sadar	12 4	per rupee.
Brahmanbaria	14 8	
Chandpur	13 0	

Noakhali.—Rainfall at Sadar 1·51, Feni 3·53. Weather hot. Sowing of early rice still continues. Prospects fair in Sadar, good in Feni. Cattle-disease reported. Common rice sells as follows :—

	Srs. ch.	
Sadar	12 0	per rupee.
Feni	14 0	

Chittagong.—Rainfall at Sadar 2·50, Cox's Bazar 2·26. Cultivation of early rice going on. Weather very hot and cloudy. Cattle-disease reported. Fodder and water sufficient. Common rice sells as follows :—

	Srs. ch.	
Sadar	13 14	per rupee.
Cox's Bazar	14 6	

Chittagong Hill Tracts.—Rainfall 4·83. Weather very hot. *Jum* cultivation continues. Cattle-disease still continues. Common rice sells at 12 seers per rupee.

Patna.—Rainfall at Sadar 0·07, Dinapore 0·21. Weather extremely hot. Sowing of maize commenced. Sugarcane doing well. Fodder and water sufficient yet. No cattle-disease. Common rice sells as follows :—

	Srs. ch.	
Sadar	13 8	per rupee.
Barh	12 8	
Bihar	13 8	
Dinapore	12 0	

Gaya.—Rainfall at Sadar 0·04, Jahanabad 0·02. Weather very hot and occasionally cloudy. Sugarcane continues doing well. Fields are being ploughed for sowing *bhadoi* crops. Fodder and water sufficient. Average price of common rice is 12½ seers per rupee.

Shahabad.—Rainfall nil. Weather hot with west winds and clouds. Sugarcane doing well. Fodder and water abundant. Common rice sells at 14 seers per rupee.

Saran.—Rainfall at Sadar 0·01, Siwan nil, Gopalganj nil. Weather hazy and very hot. Preparation of field for *bhadoi* crops still going on. Sugarcane and indigo doing well. Fodder and water sufficient. Common rice and maize sell at 12½ and 18 seers per rupee respectively at Sadar.

Champaran.—No rain. Weather very hot. Sowing of winter paddy and *bhadoi* crops in progress. Sugarcane and Cheena doing well. No cattle-disease. Fodder and water sufficient. Common rice and maize sell at 14½ and 21 seers per rupee respectively.

Muzaffarpur.—Rainfall at Sadar nil, Hajipur 0·08, Sitamarhi nil. Weather very hot and occasionally cloudy. Prospects of crops favourable. Sowing of maize crops in progress. Fodder and water sufficient. No cattle-disease. Common rice and maize sell at 12 and 17 seers per rupee respectively at Sadar.

Darbhanga.—Rainfall nil. Weather hot and cloudy. Sowing of *bhadoi* crops in progress. Fodder and water sufficient. Cattle-disease reported from Singhia outpost. Common rice sells as follows :—

	Srs. ch.	
Sadar	15 6	per rupee.
Samastipur	14 0	
Madhubani	13 0	

Monghyr.—Rainfall nil. Weather very hot. *Bhadoi* sowing has commenced. Water and fodder sufficient. No cattle-disease reported. Sugarcane doing well. Common rice sells as follows :—

	Srs. ch.	
Sadar	12 8	per rupee.
Begusarai	12 0	
Jamui	12 0	

Bhagalpur.—Rainfall at Sadar and Banka nil, Madhipura 0·03, Supaul 0·60. Weather very hot. Rains urgently needed for agricultural operations. A few cases of

cattle-disease reported from Supaul and Madhipura. Fodder and water sufficient. Common rice sells as follows:—

	Srs.	ch.	
Sadar	14	8	per rupee.
Banka	12	0	
Madhipura	15	0	
Supaul	17	0	

Purnea.—Rainfall at Sadar 1·25, Kishanganj 2·44, Araria 1·80 Weeding of *bhadoi* paddy continues. Lands being prepared for *aghani* rice. Condition of standing crops good. No cattle-disease. Fodder and water sufficient. Common rice sells as follows:—

	Srs.	ch.	
Sadar	11	8	per rupee.
Kishanganj	11	8	
Araria	13	0	

Malda.—Rainfall at Sadar 0·55, Shibganj 0·46, Nawabganj 0·38. Weather very hot. Lands are being prepared for winter rice. *Bhadoi* crops and jute doing well. Prospects good. No cattle-disease. Common rice sells at 12 seers per rupee.

Sonthal Parganas.—Rainfall at Dumka 0·22, Jamtara 0·12, Rajmahal 0·42. Sugarcane doing well. Extent of sowing of maize and *mandua* 65 per cent. and that of *arhar* 40 per cent. Rain wanted for further sowing. Fodder and water sufficient. Common rice at Sadar sells at 12 seers per rupee.

Cuttack.—Rainfall at Sadar 0·26. Fall general. Weather hot. Sugarcane, *biali* and *saradh* growing. Standing crops suffering for want of more rain. Condition of cattle generally good. Fodder and water sufficient. Common rice sells at Cuttack at 15¾ seers per rupee.

Balasore.—Rainfall at Sadar 0·44. Weather hot. Sowing of paddy continues. Sugarcane thriving. Fodder and water sufficient Common rice sells as follows:—

	Srs.	ch.	
Sadar	17	0	per rupee.
Bhadrak	18	0	

Angul.—Rainfall at Sadar nil, Phulbani 0·02. Weather excessively hot and cloudy. Ploughing and sowing of *saradh* and *bhadoi* crops in progress. Fodder and water available. Common rice sells at 19 seers per rupee in both the subdivisions.

Puri.—Rainfall at Sadar and Khurda nil. Weather hot. *Dalua* and cotton being harvested. Sugarcane promises well. *Saradh* and *bhadoi* paddy being sown. Condition of miscellaneous crops good. *Mandua* seedlings progressing. Fodder and water sufficient. Common rice selling at 14 seers and 7 chitaks per rupee.

Hazaribagh.—Rainfall at Sadar 0·01, Giridih nil. Weather hot. Lands being ploughed. Fodder and water sufficient. No cattle-disease reported. Common rice sells at 12 seers per rupee at Giridih. Prices at Sadar are as follows:—

	Srs	ch.	
Common rice	11	8	per rupee.
Mandua	19	8	
Indian-corn	15	0	

Ranchi.—Rainfall at Sadar 0·04. Weather hot. Ploughing and manuring continue. Rain badly wanted. Cattle-disease reported from several thanas. Fodder and water sufficient. Common rice sells at Sadar and at Gumla at 12 and 14 seers per rupee respectively.

Palamau.—Rainfall at Sadar nil. Weather very hot. Sugarcane doing well. Ploughing commences in places. A few cases of cattle-disease reported. Fodder and water available but insufficient. Rice sells at Sadar at 11 seers 13 chittaks per rupee.

Manbhum.—Rainfall nil Weather very hot. Extent of sowings of rice, *mandua*, cotton and *arhar* is estimated at 50, 25, 50, and 12 per cent. respectively. Fodder and water sufficient. Cattle-disease reported from three thanas. Common rice sells at 12 seers per rupee.

Singhbhum.—Rainfall at Sadar 0·17. Prospects of crops good. Ploughing and sowing of paddy continue. Fodder and water sufficient. Rice sells at 14 seers per rupee.

General Summary.—Rain was general and plentiful in North and East Bengal; being heavy in Jalpaiguri, Rangpur and Mymensingh. The fall was very scanty in Patna, Orissa and Chota Nagpur Divisions, some districts, viz, Shahabad, Champaran, Darbhanga, Monghyr, Puri, Palamau and Manbhum receiving no rain at all. More rain is also needed in Burdwan, Birbhum, Bankura, Howah, 24-Parganas, Murshidabad, Bhagalpur, Sonthal Parganas, Cuttack and Ranchi for standing crops as well as for agricultural operations. Prospects otherwise good. Cattle-disease is reported from ten districts. Fodder and water are generally sufficient. Price of common rice has risen in eight and fallen in twelve districts.

N. D. BEATSON BELL,

Offg. Director of the Dept. of Land Records and Agriculture, Bengal.

DEPT. OF LAND RECORDS AND AGRICULTURE, BENGAL,

The 20th June 1905.

PRICES-CURRENT (retail) of Food-grains and Salt in the Head-quarters

Number.	DISTRICTS.	QUANTITIES PER RUPEE IN											
		WHEAT.			BARLEY.			RICE, COMMON.			JOWAR OR CHOLUM (*Sorghum Vulgare*).		
		Present return.	Next preceding return.	Corresponding return of last year.	Present return.	Next preceding return.	Corresponding return of last year.	Present return.	Next preceding return.	Corresponding return of last year.	Present return.	Next preceding return.	Corresponding return of last year.
	BENGAL	S. Ch.	S. Ch.	S. Ch.	S. Ch.	S. Ch.	S. Ch.	S. Ch.	S. Ch.	S. Ch.	S. Ch.	S. Ch.	S. Ch.
BURDWAN DIVISION. 1	Burdwan ..	...	..	15 8	...	...	...	14 8	14 0	12 8	...	...	...
2	Birbhum ...	12 12	12 12	15 0	...	..	..	14 0	14 0	13 8	...	.	...
3	Bankura ...	11 0	13 0	16 0	...	...	...	14 0	14 0	14 0	...	...	...
4	Midnapore ...	9 0	9 0	12 0	...	...	...	14 0	15 0	14 8	...	.	...
5	Hooghly ...	8 8	8 0	12 0	...	...	...	10 12	11 0	10 0	...		...
6	Howrah ..	12 0	...	13 0	...	...	16 0	13 0	13 0	12 0	...	.	...
PRESIDENCY DIVISION. 7	24-Parganas ..	...	..	.	...	..	...	12 0	11 0	13 8	...	...	...
8	Calcutta ..	10 10	10 10	11 0	14 0	14 0	16 0	8 10	8 10	9 10	...	15 0	17 0
9	Nadia ...	12 13	12 13	15 4	24 9	24 9	20 0	12 5	12 5	11 8	...	...	...
10	Murshidabad ..	13 8	13 8	16 0	23 0	22 0	24 0	12 8	12 8	12 0	...	...	...
11	Jessore ..	10 0	10 0	11 8	16 0 (Country.) / 11 4 (Patna)	16 0 (Country.) / 11 4 (Patna)	16 0 (Country.) / 12 0 (Patna)	13 0	14 0	14 0	...	...	...
12	Khulna ...	...	...	...	...	...	..	14 8	14 8	16 0	...	...	...
RAJSHAHI DIVISION. 13	Rajshahi ...	14 4	14 4	17 13	24 0	24 0	27 0	12 0	12 0	13 14	...	...	...
14	Dinajpur ...	12 0	11 8	13 4	...	...	...	14 8	14 8	14 0	...	...	...
15	Jalpaiguri ...	10 0	10 0	11 8	...	..	...	12 0	12 0	13 0	...	...	...
16	Darjeeling ...	...	...	...	...	...	...	11 0	11 0	12 0	...	..	...
17	Rangpur ...	11 8	11 8	11 4	..	...	...	13 0	12 0	11 4	...	...	...
18	Bogra ...	12 0	12 0	14 1	...	...	...	13 8	13 8	15 12	...	...	...
19	Pabna ...	15 12	...	18 12	...	...	24 0	12 0	12 0	16 8	...	...	...
DACCA DIVISION. 20	Dacca ...	13 0	13 0	16 0	24 0	24 9	29 0	13 8	13 5	15 8	...	...	...
21	Mymensingh ...	10 8	10 0	12 0	10 10	10 1	11 0	13 0	14 0	14 0	...	...	...
22	Faridpur ...	16 0	16 0	18 12	25 0	25 0	24 0	12 0	12 0	14 0	...	...	...
23	Backergunge ...	..	...	...	...	...	...	13 2	13 8	13 8	...	...	...

A. In the subdivisions the retail prices of salt per rupee are—Kalna 16 seers; Katwa 16½ seers; Raniganj 16 seers.
B. At Rampur Hát the retail price of salt is 16 seers per rupee.
C. At Vishnupur the retail price of salt is 16 seers per rupee.
D. In the subdivisions the retail prices of salt per rupee are—Contai 15 seers; Tamluk 16 seers; Ghatal 16 seers.
E. In the subdivisions the retail prices of salt per rupee are—Serampore 16 seers; Arambagh 16 seers.
F. At Ulubaria the retail price of salt is 16 seers per rupee.
G. In the marts in the interior of the district the retail prices of salt per rupee are—Chetla 16 seers; Barasat 14 seers; Baduria 14 seers 3 chitaks; Mograhat 16 seers; Barrackpore 13 seers.
H. In the subdivisions the retail prices of salt per rupee are—Kushtia 16 seers; Chuadanga 16 seers (panga); Meherpur 13½ seers; Ramghat 16 seers.
I. In the subdivisions the retail prices of salt per rupee are—Lalbagh return not received; Kandi 14 seers; Jangipur 16 seers.
J. In the subdivisions the retail prices of salt per rupee are—Jhenida 16 seers; Magura 16 seers; Bangao 16 seers; Narail 14 3/4 seers.

SEERS OF 80 TOLAHS.

Bajra or Cumbu (*Pennisetum typhoideum*).			Marua or Ragi (*Eleusine Corocana*).		
Present return.	Next preceding return.	Corresponding return of last year.	Present return.	Next preceding return.	Corresponding return of last year.
S. Ch.	S. Ch.	S. Ch.	S. Ch.	S. Ch.	S. Ch.
...	...	...	...	...	...
...	...	...	...	...	...
...	...	...	...	...	...
...	...	...	...	...	...
...	...	...	...	...	...
...	...	...	...	...	...
...	...	...	...	...	...
12 0	12 0	14 0	...	...	...
...	...	...	...	...	...
...	...	...	...	...	...
...	...	...	...	...	...
...	...	...	...	...	...
...	...	...	...	...	...
...	...	...	...	...	...
...	...	...	...	...	...
...	...	...	...	...	...
...	...	...	13 0	13 0	13 0
...	...	...	...	...	...
...	...	...	...	...	...
...	...	...	...	...	...
...	...	...	...	...	...
...	...	...	...	...	...
...	...	...	...	...	...

Kangni or Kakun Italian millet (*Setaria italica*).			Gram, Chana, Chhola, Kadalay or Sunaga (*Cicer arietinum*).		
Present return.	Next preceding return.	Corresponding return of last year.	Present return.	Next preceding return.	Corresponding return of last year.
S. Ch.	S. Ch.	S. Ch.	S. Ch.	S. Ch.	S. Ch.
...	...	...	14 6	14 0	18 8
...	...	...	14 4	14 4	17 4
...	...	...	11 0	11 8	18 0
...	...	...	11 0 to 13 0	11 0 to 13 0	14 0 to 16 0
...	...	...	13 0	13 0	13 8
...	...	...	16 0	16 0	16 0
...	...	...	15 0	16 0	16 0
7 0	7 0	8 0	13 0	12 4	13 0
...	...	...	18 5	18 5	20 0
...	...	...	17 0	17 0	20 0
...	...	...	16 0	16 0	16 0
...	...	...	15 0	15 0	16 13
...	...	...	17 4	17 4	21 0
...	...	...	16 0	16 0	16 8
...	...	...	13 0	13 0	14 0
...	...	...	11 0	11 0	12 8
...	...	...	13 0	13 0	15 12
...	...	...	15 0	15 12	16 8
...	...	...	16 0	12 0	19 0
...	...	...	15 8	15 0	15 0
...	...	...	13 0	13 0	13 4
...	...	...	10 0	10 0	12 0
...	...	...	12 8	13 0	13 8

Station Bazars of the Districts of Bengal on the 15th June 1905.

INDIAN-CORN OR MAIZE (*Zea mays*).			ARHAR (*dál*) OR THUR, CADJAN PEA (*Cajanus indicus*)			SALT.			WHOLESALE PRICES PER MAUND OF 40 SEERS. SALT.			DISTRICTS.	Number.	
Present return.	Next preceding return.	Corresponding return of last year.	Present return.	Next preceding return.	Corresponding return of last year.	Present return.	Next preceding return.	Corresponding return of last year.	Present return.	Next preceding return.	Corresponding return of last year.			
S. Ch.	S. Ch.	S. Ch.	S. Ch.	S. Ch.	S. Ch.	S. Ch.	S. Ch.	S. Ch.	Rs. A. P.	Rs. A. P.	Rs. A. P.	BENGAL.		
...	...	...	10 8	10 8	13 0	A 16 8	16 8	14 8	2 3 6	2 3 6	2 12 0	Burdwan.	1	Burdwan Division.
...	...	...	8 8	9 0	13 0	B 16 0	15 0	12 0	2 7 0	2 8 0	3 2 6	Birbhum.	2	
...	...	...	10 0	12 0	12 8	C 16 12	16 12	12 8	2 6 0	2 6 0	2 13 0	Bankura.	3	
...	...	...	9 0	9 0	11 8	D 14 0	14 0	11 8	2 6 0	2 6 0	2 14 0	Midnapore.	4	
...	...	...	10 0	10 0	11 0	E 16 0	16 0	13 0	2 8 0	2 8 0	3 0 0	Hooghly.	5	
...	...	...	10 8	11 0	12 0	F 17 0	16 0	12 0	2 6 0	2 4 0	3 0 0	Howrah.	6	
...	...	...	11 8	11 0	12 0	G 16 0	16 0	Panga. 13 0	2 2 0	2 1 6	2 11 6	24-Parganas.	7	Presidency Division.
15 0	15 0	...	8 10	8 0	9 6	13 0	13 0	Panga. 11 0	2 8 0	2 8 0	2 10 0	Calcutta.	8	
...	...	...	9 2	9 2	11 0	H 16 0	16 0	13 0	2 4 0	2 4 0	3 0 0	Nadia.	9	
...	...	...	10 8	10 0	15 0	I 16 0	16 0	12 0	2 8 0	2 8 0	3 4 0	Murshidabad.	10	
...	...	...	16 0	16 0	16 0	J 16 0	16 0	Panga. 12 0	2 8 0	2 8 0	3 2 0	Jessore.	11	
...	...	...	10 0	10 0	10 10	K 13 5	13 5	Panga. 13 5	3 0 0	3 0 0	3 0 0	Khulna.	12	
...	...	...	12 0	12 0	13 8	L 15 9	15 9	12 13	2 9 0	2 9 0	3 1 3	Rajshahi.	13	Rajshahi Division.
...	...	...	10 0	10 0	12 0	M 14 0	15 0	13 4	2 13 0	2 10 0	3 0 0	Dinajpur.	14	
...	...	...	8 0	8 0	9 0	N 13 8	13 8	Panga. 12 0	2 12 0	2 12 0	3 2 0	Jalpaiguri.	15	
11 0	12 0	20 0	6 8	6 8	6 0	O 11 8	11 0	10 0	3 6 0	3 8 0	4 0 0	Darjeeling.	16	
...	...	...	10 0	10 0	10 2	P 15 0	16 0	Panga. 12 1½	2 8 0	2 8 0	3 5 4	Rangpur.	17	
...	...	...	17 4	17 4	17 4	15 6	15 12	12 12	2 9 4	2 8 0	3 0 9	Bogra.	18	
...	...	...	12 0	10 10	12 0	Q 16 0	16 0	12 12	2 6 3	2 6 0	3 2 6	Pabna.	19	
...	...	...	15 0	15 0	16 0	R 16 0	16 0	Panga. 13 0	2 8 0	2 8 0	2 15 0	Dacca.	20	Dacca Division.
...	...	...	11 4	11 0	10 8	S 15 4	15 4	Panga. 12 12	2 10 0	2 10 0	3 2 0	Mymensingh.	21	
...	...	...	8 0	8 0	11 0	T 16 0	16 0	12 0	2 0	2 8 0	3 4 0	Faridpur.	22	
...	...	...	...	...	...	U 16 0	14 0	Panga. 13 0	2 7 0	2 12 0	3 0 0	Backergunge.	23	

K. In the subdivisions the retail prices of salt per rupee are—Bagerhat 16 seers; Satkhira 16 seers.
L. In the subdivisions the retail prices of salt per rupee are—Nator 15½ seers; Naugaon 13½ seers.
M. No report from subdivision.
N. At Alipur Duars the retail price of salt is 10 seers per rupee.
O. At Kurseong and Siliguri the retail prices of salt per rupee are 11 seers and 14 seers, respectively.
P. In the subdivisions the retail prices of salt per rupee are—Gaibanda 12 seers; Kurigram 12 seers; Nilphamari 14 seers.
Q. At Sirajganj the retail price of salt is 17 seers per rupee.
R. In the marts in the interior of the district the retail prices of salt per rupee are—Madanganj 16 seers, Manikganj 10½ seers; Mirkadim 12½ seers.
S. In the subdivisions the retail prices of salt per rupee are—Kishorganj 13 seers 5 chitaks; Jamalpur 15 seers; Tangail 12 seers; Netrokona 11½ seers.
T. In the subdivisions the retail prices of salt per rupee are—Goalundo 13 seers 14 chitaks; Madaripur 14 seers.
U. In the subdivisions the retail prices of salt per rupee are—Pirojpur 13 seers; Patuakhali 13 seers; Bhola 14 seers.

PRICES-CURRENT (retail) of Food-grains and Salt in the Head-quarters

QUANTITIES PER RUPEE IN

Number	DISTRICTS	WHEAT. Present return.	WHEAT. Next preceding return.	WHEAT. Corresponding return of last year.	BARLEY. Present return.	BARLEY. Next preceding return.	BARLEY. Corresponding return of last year.	RICE, COMMON. Present return.	RICE, COMMON. Next preceding return.	RICE, COMMON. Corresponding return of last year.	JOWAR OR CHOLUM (*Sorghum Vulgare*). Present return.	JOWAR OR CHOLUM (*Sorghum Vulgare*). Next preceding return.	JOWAR OR CHOLUM (*Sorghum Vulgare*). Corresponding return of last year.
BENGAL—concluded.		S. Ch.	S. Ch.	S. Ch.	S. Ch.	S. Ch.	S. Ch.	S. Ch.	S. Ch.	S. Ch.	S. Ch.	S. Ch.	S. Ch.
CHITTAGONG DIVISION.													
24	Tippera ..	...	...	...	...	...	...	12 4	13 0	13 0	...	...	
25	Noakhali ...	...	...	.	...	...	...	13 0	13 0	13 11	...	...	...
26	Chittagong ...	...	...	...	...	...	...	13 14	11 7	14 4	...	...	...
27	Chittagong Hill Tracts.	...	...	...	..	...	...	13 0	14 0	11 0	..	...	...
BIHAR.													
PATNA DIVISION.													
28	Patna	14 0	13 8	19 0	20 0	20 0	27 0	14 0	14 0	16 0	10 0	12 0	28 0
29	Gaya ...	14 1	13 12	18 4	21 8	22 0	25 10	12 8	13 0	12 13	...	21 0	...
30	Shahabad ...	14 0	14 0	18 0 to 19 0	20 0	20 0	25 0	14 0	14 0	15 0	...	...	..
31	Saran ...	12 0	12 8	17 0	20 0	20 0	28 0	12 8	12 8	16 0	...	...	...
32	Champaran ...	16 0	15 0	18 0	24 8	24 8	37 0	14 8	14 0	17 0	...	...	...
33	Muzaffarpur ..	12 0	12 0	15 0	28 0	28 0	26 0	12 0	12 0	15 0	...	...	...
34	Darbhanga ..	15 6	15 6	18 11	24 3	24 3	27 8	14 4	14 8	15 12	...	...	...
BHAGALPUR DIVISION.													
35	Monghyr ...	15 11	15 0	19 0	27 3½	27 3½	22 0	12 11	13 0	13 0	...	...	...
36	Bhagalpur ..	14 0	13 12	16 8	24 0	24 0	23 0	15 0	15 0	13 14	...	...	...
37	Purnea ...	16 0	16 0	17 0	...	...	...	11 0	11 8	15 0	...	...	...
38	Malda ...	13 0	13 0	16 0	.	...	...	12 0	12 0	13 0	...	...	...
39	Santhal Parganas.	11 0	10 12	13 0	16 0	18 0	18 0	15 8	14 0	13 0	...	...	...
ORISSA.													
ORISSA DIVISION.													
40	Cuttack ...	13 2	13 12½	17 1	...	...	...	15 12	17 1	17 11	...	...	...
41	Balasore ...	13 0	13 0	11 6	...	...	...	15 0	17 0	18 0	...	...	...
42	Angul ...	8 0	8 0	8 0	...	...	...	18 0	18 0	25 0	..	...	...
43	Puri ...	12 6	13 0	13 2	...	...	...	14 7	15 12	17 1	...	...	...
CHOTA NAGPUR.													
CHOTA NAGPUR DIVISION.													
44	Hazaribagh ...	11 8	11 8	13 8	16 0	15 8	17 8	11 0	11 8	12 0	...	...	...
45	Ranchi ...	6 12 to 10 8	7 0 to 11 8	8 12 to 13 8	15 0	14 8	16 0	12 0	11 8	13 0	...	...	...
46	Palamau ...	13 8	14 10	16 14	18 0	20 4	...	11 4	12 6	12 10½	...	...	...
47	Manbhum ...	12 0	12 0	13 0	15 0	13 0	24 0	13 0	13 0	12 4	...	...	...
48	Singhbhum ..	14 0	14 0	12 0	...	...	...	14 0	14 0	15 0	...	...	...

y. In the subdivisions the retail prices of salt per rupee are—Chandpur 13 seers 8 chitaks; Brahmanbaria 14 seers 8 chitaks.
W. At Feni Hat the retail price of salt is 16 seers per rupee.
X. Return from Cox's Bazar not received.
Y. At Chandraghona the retail price of salt is 12 seers per rupee.
Z. In the subdivisions the retail prices of salt per rupee are—Barh 16 seers; Dinapore return not received; Bihar 14 seers.
a. In the subdivisions the retail prices of salt per rupee are—Jahanabad 14 seers; Nawada 16 seers; Aurangabad 15½ seers.
b. In the subdivisions the retail prices of salt per rupee are—Buxar 16 seers; Bhabhua 15 seers; Sasaram 16 seers.
c. In the subdivisions the retail prices of salt per rupee are—Siwan 14 seers 8 chitaks; Gopalganj 17½ seers.
d. At Bettiah the retail price of salt is 14 seers per rupee.
e. In the subdivisions the retail prices of salt per rupee are—Hajipur 14 seers; Sitamarhi return not received.
f. In the subdivisions the retail prices of salt per rupee are—Samastipur 15 seers; Madhubani 14 seers 15 chitaks.
g. In the subdivisions the retail prices of salt per rupee are—Begusarai 14 seers; Jamui 13½ seers.

CALCUTTA,
The 19th June 1905.

RS OF 80 TOLAHS.

...RA OR CUMBU (*Penisetum typhoid-eum*).			MARUA OR RAGI (*Eleusine Coracana*).		
	Next preceding return.	Corresponding return of last year.	Present return.	Next preceding return.	Corresponding return of last year.
S. Ch.	S. Ch.	S. Ch.	S. Ch.	S. Ch.	S. Ch.
...	...	...	...	...	...
...	...	...	...	...	...
...	...	...	...	...	...
...	...	...	...	...	...
...	...	...	...	...	...
4	12 5	...	...	...	...
...	...	...	...	...	...
...	...	...	20 0	18 0	...
...	...	...	28 0	28 0	35 0
...	...	...	23 0	23 0	26 0
...	...	...	24 8	26 7	27 8
...	...	...	...	...	...
...	...	...	...	...	...
...	...	...	...	...	...
0	9 0	14 0	...	...	...
...	...	...	...	...	...
...	...	...	...	...	...
...	...	...	...	...	...
...	...	...	...	...	...
...	...	...	...	...	...
...	...	...	19 8	19 8	25 8
...	...	...	25 0	25 0	35 0
...	...	...	...	...	...
...	...	...	...	...	...
...	...	...	...	...	...

Kangni or Kakun, Italian millet (*Setaria italica*)			Gram, Chana, Chhola, Kalai or Sunaga (*Cicer arietinum*)		
Present return.	Next preceding return.	Corresponding return of last year.	Present return.	Next preceding return.	Corresponding return of last year.
S. Ch.	S. Ch.	S. Ch.	S. Ch.	S. Ch.	S. Ch.
...	...	...	...	...	...
...	...	...	13 0	11 8	11
...	...	...	13 0	13 0	13
...	...	...	...	...	...
...	...	22 0	19 0	19 0	23
11 12	14 7	...	18 11	19 8	21
...	...	...	18 0	18 0	23
...	...	...	16 0	16 0	21
...	...	...	19 4	19 4	28
...	...	...	13 0	13 0	21
...	...	...	19 19	18 11	23
...	...	...	20 8	21 0	21
...	...	...	20 0	20 0	20
...	...	...	15 0	15 0	18
...	...	...	18 0	18 0	24
...	...	...	16 0	14 8	15
...	...	...	18 6 Birl or kalai.	18 6	13
...	...	...	14 0 Chhola.	14 0	14
...	...	...	17 0 Biri.	18 0	17
...	...	...	16 0	16 0	20
...	...	...	17 1	17 1	17
...	...	...	15 0	14 8	15
...	...	...	13 0	12 8	14 8 15
...	...	...	16 14	16 14	20
...	...	...	13 8	14 0	16
...	...	...	14 0	14 0	13

Station Bazars of the Districts of Bengal on the 15th June 1905—concld.

Indian-corn or Maize (*Zea mays*).			Arhar (*dal*) or Thur, Cadjan Pea (*Cajanus indicus*).			Salt.			Wholesale prices per maund of 40 seers. Salt.			Districts.	Number.	
Present return.	Next preceding return.	Corresponding return of last year.	Present return.	Next preceding return.	Corresponding return of last year.	Present return.	Next preceding return.	Corresponding return of last year.	Present return.	Next preceding return.	Corresponding return of last year.			
S. Ch.	S. Ch.	S. Ch.	S. Ch.	S. Ch.	S. Ch.	S. Ch.	S. Ch.	S. Ch.	Rs. A. P.	Rs. A. P.	Rs. A. P.	BENGAL—*concluded.*		
...	...	...	...	...	...	12 13 V	12 13	10 10	Panga. 2 10 0	2 10 0	3 2 0	Tippera.	24	Chittagong Division.
...	...	...	...	...	...	16 0 W	16 0	10 12	Panga. 2 8 0	2 8 0	3 12 0	Noakhali.	25	
...	...	...	9 4	9 8	9 8	16 0 X	16 0	13 0	Panga. 2 6 0	2 6 0	3 0 0	Chittagong.	26	
...	...	...	8 0	8 0	7 8	13 0 Y	13 0	11 0	3 0 0	3 0 0	3 8 0	Chittagong Hill Tracts.	27	
												BIHAR.		
18 0	18 0	28 0	12 0	12 0	16 0	16 0 Z	16 0	13 0	Panga. 2 8 0	2 8 0	2 15 0	Patna.	28	Patna Division.
16 6	18 7	23 9	11 4	11 13	14 5½	15 6 a	15 7	12 15	2 10 0	2 9 0	3 1 9	Gaya	29	
...	...	...	12 0	12 0	16 0	16 0 b	16 0	13 0	2 8 0	2 8 0	3 1 3	Shahabad.	30	
18 0	18 0	28 0	12 0	11 0	16 0	16 0 c	16 0	13 0	Panga. 2 8 6	2 7 6	2 15 0	Sa n	31	
21 0	21 0	31 0	12 8	12 8	25 8 dal 12 0	15 0 d	15 0	12 8	2 9 0	2 9 0	3 3 0	Champaran.	32	
17 0	17 0	28 0	12 8	12 8	15 0	13 0 e	13 0	12 4	2 15 3	2 15 3	3 3 0	Muzaffarpur	33	
24 3	22 0	27 8	13 3	12 1	17 10	15 6 f	15 6	13 4	3 5 0	3 5 0	3 8 0	Darbhanga.	34	
...	...	...	10 8	10 8	14 0	15 11 g	15 11	12 0	2 10 0	2 10 0	3 4 0	Monghyr	35	Bhagalpur Division.
25 0	25 0	20 4	11 8	12 0	16 0	16 8 h	16 8	12 8	Panga. 2 7 0	2 7 0	2 14 3	Bhagalpur.	36	
25 0	25 0	22 0	11 0	11 0	11 0	11 0 i	11 0	11 0	3 8 0	3 8 0	3 12 0	Purnea.	37	
...	...	...	11 0	11 0	13 0	13 0 j	13 0	12 0	2 14 0	2 12 0	3 4 0	Malda.	38	
16 8	18 0	20 0	16 0	16 0	21 0	15 8 k	14 8	11 8	2 10 0	2 10 0	3 8 0	Santhal Parganas	39	
												ORISSA		
...	...	...	17 1	18 6	18 6	15 0 l	15 0	15 0	2 8 0	2 8 0	2 8 0	Cuttack	40	Orissa Division.
...	...	...	10 0	10 0	10 0	17 0 m	7 0	13 0	Panga. 2 8 0	2 8 0	2 15 0	Balasore.	41	
...	...	...	20 0	20 0	24 0	10 8 n	10 8	10 0	3 4 0	3 4 0	3 8 0	Angul.	42	
...	...	...	11 13	11 13	11 2	16 0 o	16 0	15 8	2 6 0	2 6 0	2 9 0	Puri	43	
												CHOTA NAGPUR.		
15 0	14 8	19 8	9 0	9 8	10 8	13 4 p	12 8	10 8	3 0 0	3 1 3	3 10 0	Hazaribagh.	44	Chota Nagpur Division.
...	...	25 0	6 0	6 0	8 8 to 10 0	12 0	12 0	10 8	Panga. 3 4 0	4 0	3 12 0	Ranchi.	45	
15 12	16 14	...	11 4	12 6	11 4	15 4½	15 3	11 13	...	...	...	Palamau.	46	
...	...	24 0	11 8	11 8	12 0	14 0 q	14 0	12 0	2 8 0	2 8 0	3 0 0	Manbhum.	47	
...	...	...	13 0	13 0	10 0	11 0	11 0	11 0	Panga. 3 8 0	3 8 0	3 8 0	Singhbhum.	48	

h. In the subdivisions the retail prices of salt per rupee are—Banka 11½ seers; Madhipura 13 seers; Supaul 14 seers.
i. In the subdivisions the retail prices of salt per rupee are—Kishanganj 12 seers; Araria 14 seers.
j. At Balia Nawabganj the retail price of salt is 13 seers per rupee.
k. In the subdivisions the retail prices of salt per rupee are—Deoghar 16 seers; Godda 10 seers; Jamtara 14 seers, Pakaur 16 seers; Rajmahal 16 seers.
l. In the subdivisions the retail prices of salt per rupee are—Jajpur return not received; Kendrapara 16 seers.
m. At Bhadrak the retail price of salt is 16 seers per rupee.
n. In the marts in the interior of the district the retail prices of salt per rupee are—Sankhpur 10½ seers, Bisnpara 9 seers.
o. At Khurda the retail price of salt is 16 seers per rupee.
p. At Gumla the retail price of salt is 11 seers per rupee.
q. Gobandpur return not received.

Published for general information.

R. W. CARLYLE,

Offg. Chief Secy. to the Govt. of Bengal.

PRICES-CURRENT (wholesale) of Food-grains, Firewood, &c.

Number.	Marts.	Rice (best sort).			Common rice (*mota chaul*).			Wheat (*Triticum sativum*).			Barley (*Hordeum vulgare*), &c.		
		Present return.	Next preceding return.	Corresponding return of last year.	Present return.	Next preceding return.	Corresponding return of last year.	Present return.	Next preceding return.	Corresponding return of last year.	Present return.	Next preceding return.	Corresponding return of last year.
		Rs. A. P.	Rs. A. P.	Rs. A. P.	Rs. A. P.	Rs. A. P.	Rs. A. P.	Rs. A. P.	Rs. A. P.	Rs. A. P.	Rs. A. P.	Rs. A. P.	Rs. A. P.
1	Calcutta ...	5 8 0	5 8 0	5 0 0	4 8 0	4 8 0	4 0 0	3 8 0	3 8 0	3 4 0	2 10 0	2 10 0	2 6 0
2	Burdwan ...	3 12 0	3 14 0	4 2 0	2 12 0	2 13 0	3 3 0	...	...	...	...	...	...
3	Midnapore ...	3 2 0	3 2 0	3 8 0	2 10 0	2 9 0	2 11 0	...	...	...	...	...	...
4	Patna ...	...	...	6 10 0	3 1 5	3 2 9	2 8 0	...	...	2 2 0	...	...	...
5	Rangpur ...	4 0 0	4 0 0	3 12 5	2 12 0	3 0 0	3 5 4	3 8 0	3 8 0	3 8 10	...	...	...
6	Dacca ...	3 10 0	3 11 0	3 2 0	2 14 0	2 14 0	2 8 0	3 0 0	3 0 0	2 4 0	1 10 0	1 10 0	1 4 0
7	Chittagong ...	...	...	...	2 14 0	2 14 0	3 2 0	...	...	...	...	...	...
8	Patna ...	4 0 0	4 0 0	2 12 0	2 14 0	3 2 0	2 7 0	2 14 0	2 12 0	2 1 0	2 0 0	2 0 0	1 7 0
9	Muzaffarpur ...	5 0 0	5 0 0	5 0 0	3 1 3	3 1 3	2 9 3	3 1 3	3 1 3	2 8 0	1 10 6	1 10 6	1 8 0
10	Bhagalpur ...	3 9 0	3 9 0	3 15 0	2 10 0	2 13 0	2 14 0	2 11 0	2 14 0	2 7 0	1 8 0	1 11 0	1 12 0
11	Cuttack ...	3 13 0	3 13 0	3 12 0	2 8 0	2 5 6	2 2 6	3 0 9	2 14 0	2 4 0	...	...	...
12	Ranchi ...	4 8 0	4 8 0	4 1 9	3 1 0	3 1 0	2 10 0	3 13 0 to 5 15 0	3 8 0 to 5 11 6	2 15 3 to 4 9 0	2 10 8	2 12 0	2 8 0

CALCUTTA,
The 19th June 1905.

Juar or Cholum (*Sorghum vulgare*).			Bajra or Combu (*Pennisetum typhoideum*).			Marua or Ragi (*Eleusine coracana*).			Gram, Chana, Chola, Kadalay, or Hunaga (*Cicer arietinum*).		
Present return.	Next preceding return.	Corresponding return of last year.	Present return.	Next preceding return.	Corresponding return of last year.	Present return.	Next preceding return.	Corresponding return of last year.	Present return.	Next preceding return.	Corresponding return of last year.
A. P.	Rs. A. P.	Rs. A. P.	Rs. A. P.	Rs. A. P.	Rs. A. P.	Rs. A. P.	Rs. A. P.	Rs. A. P.	Rs. A. P.	Rs. A. P.	Rs. A. P.
...	2 8 0	2 4 0	2 14 0	2 12 0	2 10 0	...	...	...	3 12 0	3 0 0	2 12 0
...	...	...	...	...	...	...	...	...	2 10 0	2 12 0	2 3 0
...	...	...	...	...	...	...	...	...	2 12 0 to 3 4 0	2 12 0 to 3 4 0	2 4 0 to 2 8 0
...	...	...	...	...	...	...	...	...	2 5 6	2 8 0	2 0 0
...	...	...	...	...	...	...	...	...	2 12 0	2 12 0	2 1 9
...	...	...	...	...	...	...	...	...	2 9 0	2 10 0	2 7 0
...	...	...	...	...	...	...	...	...	3 0 0	3 0 0	3 0 0
0 0	3 5 0	1 8 0	...	...	...	...	...	...	2 2 0	2 1 0	1 11 0
...	...	...	...	...	...	1 10 6	1 10 6	1 8 0	2 13 9	2 13 0	1 13 0
...	...	...	...	...	...	...	...	...	2 0 0	2 0 0	1 15 6
									Hiri or kalai.		
...	...	...	...	...	...	...	...	...	2 3 0	2 1 6	2 2 6
...	...	...	...	...	...	...	...	...	3 1 0	3 3 0	2 10 0 to 2 12 0

Indian-corn or Maize (*Zea mays*).			Arhar Dal or Thur—Cadjan Pea (*Cajanus indicus*).			Linseed.			Mustard and Rapeseed		
Present return.	Next preceding return.	Corresponding return of last year.	Present return.	Next preceding return.	Corresponding return of last year.	Present return.	Next preceding return.	Corresponding return of last year.	Present return.	Next preceding return.	Corresponding return of last year.
Rs. A. P.	Rs. A. P.	Rs. A. P.	Rs. A. P.	Rs. A. P.	Rs. A. P.	Rs. A. P.	Rs. A. P.	Rs. A. P.	Rs. A. P.	Rs. A. P.	Rs. A. P.
2 8 0	2 8 0	...	4 8 0	4 12 0	4 4 0	4 14 0	4 14 0	4 10 0	4 6 0	4 10 0	4 6 0
—	...	...	3 10 6	3 13 0	3 2 0	...	—	...	5 6 0	5 4 0	3 10 0
—	...	—	4 0 0	4 0 0	3 4 0	4 12 0	4 12 0	3 2 0	Black mustard. 5 12 0	5 12 0	3 12 0
									Rapeseed. 4 4 0	4 4 0	2 10 0
—	...	...	...	...	3 5 3	4 10 8	3 5 8	3 8 0	4 10 8	5 4 0	4 0 0
—	...	...	4 0 0	4 0 0	3 5 4	—	...	—	5 4 0	5 4 0	3 3 0
—	—	...	2 10 0	2 8 0	2 6 0	...	...	—	—	—	—
—	—	...	4 6 0	4 4 0	4 6 0	...	...	...	4 8 0	4 12 0	3 19 0
2 3 0	2 3 0	1 6 0	3 5 0	3 5 0	2 7 0	5 6 0	5 12 0	3 10 0	5 0 0	5 0 0	2 15 0
2 3 6	2 3 6	1 6 3	3 1 3	3 1 3	2 3 0	...	...	—	...	...	—
1 10 0	1 10 0	1 15 6	3 8 0	3 5 0*	2 3 0	5 0 0	5 1 0	3 6 0	Mustard. 4 0 0	4 12 0	3 6 0
									Rapeseed. 4 8 0	5 0 0	3 9 0
—	...	...	2 5 6	2 3 0	2 2 6	...	—	—	4 6 0	4 6 0	4 5 0
—	...	—	7 4 5	6 10 6	4 0 0 to 4 11 3	5 0 0	5 0 0	4 0 0	5 5 0 to 5 11 6	5 0 0 to 5 8 0	3 1 0 to 3 14 0

*Revised figure.

40 STANDARD SEERS.

Til or Jinjili seed.			Sugar (raw).			Cotton (cleaned).			Jute.		
Present return.	Next preceding return.	Corresponding return of last year.	Present return.	Next preceding return.	Corresponding return of last year.	Present return.	Next preceding return.	Corresponding return of last year.	Present return.	Next preceding return.	Corresponding return of last year.
Rs. A. P.	Rs. A. P.	Rs. A. P.	Rs. A. P.	Rs. A. P.	Rs. A. P.	Rs. A. P.	Rs. A. P.	Rs. A. P.	Rs. A. P.	Rs. A. P.	Rs. A. P.
4 4 0	4 4 0	3 12 0	5 4 0	5 0 0	4 4 0	17 0 0	17 0 0	17 0 0	6 6 0	5 14 0	5 6 0
...	...	...	5 8 0	6 0 0	4 12 0	20 0 0	20 0 0	26 0 0	...	...	...
...	...	...	6 4 0	6 0 0	4 8 0 to 5 0 0	28 0 0	23 0 0	26 0 0	...	...	...
...	...	...	4 1 3	...	5 0 0	...	25 0 0	22 0 0	7 3 6	7 3 6	5 6 3
...	...	...	5 0 0	5 0 0	5 3 6	...	...	...	5 8 0	5 8 0	6 10 8
...	...	...	6 0 0	6 0 0	5 12 0	...	...	...	6 0 0	6 0 0	5 0 0
...	...	...	3 0 0	3 8 0	5 8 0	17 0 0	18 0 0	22 0 0	...	...	...
5 12 0	5 12 0	3 0 0	5 4 0	4 8 0	4 0 0	...	18 0 0	20 0 0	8 0 0	8 0 0	4 8 0
...	...	...	3 10 0	3 70 0	3 1 3	...	...	...	...	...	...
...	...	...	4 3 0	4 4 0	4 12 0	18 0 0	17 6 0	25 3 0	...	...	...
5 2 0	5 2 0	2 15 0	5 0 0	4 9 0	4 0 0	22 0 0	22 0 0	30 0 0	...	...	...
...	...	...	5 11 6	5 5 0 to 5 11 6	4 7 0 to 5 0 0	26 10 0	26 10 0	26 10 6	...	...	...

Ghi (clarified butter).			Tobacco Leaf			Hides (cow).			Grass.		
Present return.	Next preceding return.	Corresponding return of last year.	Present return.	Next preceding return.	Corresponding return of last year.	Present return.	Next preceding return.	Corresponding return of last year.	Present return.	Next preceding return.	Corresponding return of last year.
Rs. A. P.	Rs. A. P.	Rs. A. P.	Rs. A. P.	Rs. A. P.	Rs. A. P.	Rs. A. P.	Rs. A. P.	Rs. A. P.	Rs. A. P.	Rs. A. P.	Rs. A. P.
						Per 100 pieces.					
29 0 0	41 0 0	39 0 0	9 0 0	9 0 0	8 0 0	350 0 0	450 0 0	250 0 0	1 4 0	1 4 0	1 2 0
33 0 0	33 0 0	32 8 0	...	...	—	...	...	...	...	—	—
			Madhukhali.			Uncleaned, per piece.					
34 12 0	34 8 0	32 8 0	5 8 0	5 8 0	5 0 0	1 12 0 to 2 12 0	1 12 0 to 2 12 0	2 4 0 to 3 4 0	...	...	...
			Pulta.			Cleaned, per piece.					
			8 0 0	8 0 0	8 0 0	2 0 0 to 3 0 0	2 0 0 to 3 0 0	2 8 0 to 3 8 0			
44 0 0	40 0 0	52 0 0	10 0 0	8 0 0	12 0 0	...	...	...	...	...	...
34 0 0	31 0 0	33 5 4	4 8 0	4 8 0	4 10 4	—	—	—	0 3 0	0 3 0	0 3 0
						Per maund.					
45 0 0	44 0 0	42 0 0	7 8 0	7 12 0	7 0 0	38 0 0	38 0 0	25 0 0	0 6 0	0 6 0	0 4 0
						Per maund.					
35 0 0	36 0 0	34 0 0	6 0 0	6 0 0	15 8 0	12 0 0	12 0 0	16 8 0	...	...	...
30 0 0	29 0 0	30 0 0	3 8 0	3 8 0	3 8 0	...	...	...	...	...	0 5 0
30 7 6	30 7 6	32 0 0	8 0 0	8 0 0	8 0 0	...	...	...	...	...	...
34 0 0	34 8 0	33 0 0	5 12 0	5 12 0	6 0 0	...	...	...	...	...	...
						Per maund.					
33 0 0	33 0 0	34 11 0	4 4 0	4 4 0	4 4 0	25 0 0	25 0 0	25 0 0	0 8 0	0 7 6	0 7 0
						Per piece.					
38 6 0 to 40 0 0	35 0 0 to 40 0 0	34 0 0 to 40 0 0	10 0 0	12 0 0	6 10 0 to 18 5 3	2 6 0	2 8 0	2 0 0	0 6 4	0 6 4	0 5 0

9103

the undermentioned Marts of Bengal on the 15th June 1905.

STRAW.			JUAR STALKS.			PRICE PER MAUND OF 40 STANDARD SEERS.									MARTS.
						IRON.			FIREWOOD.			SALT.			
Present return.	Next preceding return.	Corresponding return of last year.	Present return.	Next preceding return.	Corresponding return of last year.	Present return.	Next preceding return.	Corresponding return of last year.	Present return.	Next preceding return.	Corresponding return of last year.	Present return.	Next preceding return.	Corresponding return of last year.	
A. P.	Rs. A. P.	Rs. A. P.	Rs. A. P.	Rs. A. P.	Rs. A. P.	Rs. A. P.	Rs. A. P.	Rs. A. P.	Rs. A. P.	Rs. A. P.	Rs. A. P.	Rs. A. P.	Rs. A. P.	Rs. A. P.	
												Panga.			
0 0	1 0 0	0 14 0	...	...	...	6 0 0	6 0 0	5 12 0	0 8 0	0 8 0	0 8 0	2 8 0	2 6 0	2 10 0	1. Calcutta.
9 0	0 8 6	0 14 0	...	...	...	...	...	...	0 7 0	0 7 0	0 6 0	2 4 0	2 4 0	2 12 0	2. Burdwan.
												Panga.			
8 0	0 8 0	0 11 0	...	...	...	3 8 0 to 4 0 0	2 8 0 to 4 0 0	2 8 0 to 4 0 0	0 4 0	0 4 0	0 4 0	2 6 0	2 6 0	2 14 0	3. Midnapore
												Panga.			
15 0	1 0 0	0 14 0	...	...	...	5 0 0	...	6 0 0	...	0 5 6	0 6 0	2 6 3	2 6 0	3 2 6	4. Pabna.
												Panga.			
12 0	0 12 0	0 12 0	...	...	...	7 4 0	7 4 0	7 4 0	0 8 0	0 8 0	0 8 0	2 8 0	2 8 0	3 5 4	5. Rangpur.
												Panga.			
...	...	...	...	...	...	5 4 0	5 8 0	4 12 0	0 6 0	0 6 0	0 5 6	2 8 0	2 8 0	2 15 0	6. Dacca.
...	...	...	...	...	...	4 2 0	5 0 0	4 6 0	...	...	...	2 6 0	2 6 0	3 0 0	7. Chittagong.
...	...	...	...	...	...	4 0 0	4 0 0	4 0 0	0 6 0	0 6 0	0 6 0	2 8 0	2 8 0	2 15 0	8. Patna.
												Panga.			
...	...	...	...	...	...	5 11 6	5 11 6	5 11 6	0 4 0	0 4 0	0 4 0	2 15 3	2 15 3	3 3 0	9. Muzaffarpur
...	...	...	...	...	...	5 0 0	5 0 0	5 0 0	0 5 0	0 5 0	0 5 3	2 7 0	2 7 0	2 14 3	10. Bhagalpur.
												Karkatch.			
7 6	0 7 6	0 7 0	...	...	...	3 13 4	3 13 4	4 2 0	0 4 0	0 4 0	0 4 6	2 8 0	2 8 0	2 8 0	11. Cuttack.
												Panga.			
12 9	0 10 8	0 6 0 to 0 9 0	...	...	...	5 8 0	5 8 0	5 8 0	0 5 0	0 5 0	0 5 0	3 4 0	3 4 0	3 12 0	12. Ranchi.

R. W. CARLYLE,

Offg. Chief Secretary to the Govt. of Bengal.

Meteorological Report of the Province of

STATION OBSER

Meteorological Division.	Division.	District	Representative stations.	Air Pressure.					Wind.		Temperature.					
				Highest, 8 A.M., barometer reading.	Lowest, 8 A.M., barometer reading.	Mean, 8 A.M., reduced to 32°.	Mean reduced to sea-level and constant gravity, Lat. 45°.	Variation from normal mean.	Mean direction at 8 a.m.	Mean velocity in miles daily.	Highest of month.	Lowest of month.	Mean daily maximum temperature	Mean daily minimum temperature.	Mean daily temperature.	Variation from normal mean.
South-West Bengal.	Burdwan	Burdwan	Burdwan	29·839	29·467	29·665	29·713	+·041	S39°E	87	105·4	67·8	93·9	76·0	83·0	-1·3
			Itamganj	29·600	29·253	29·430	29·717	+·039	S72°E	40	107·5	68·4	95·9	75·2	85·6	-1·1
		Birbhum	.....													
		Bankura	Bankura	29·598	29·256	29·413	29·693	+·034	S61°E	134	109·0	69·7	93·0	77·4	87·7	-1·3
		Midnapore	Midnapore	29·703	29·439	29·603	29·699	+·020	S8°E	113	106·4	69·3	93·8	77·0	86·4	-1·3
		Hooghly	.....													
		Howrah	.....													
	Presidency	24-Parganas	Sangor Island	29·919	29·533	29·733	29·701	+·034	S8°E	445	96·9	68·5	90·9	79·7	85·3	-1·1
		Calcutta	Calcutta	29·805	29·544	29·746	29·713	+·035	S8°E	151	100·5	67·4	91·9	76·8	84·4	-1·1
		Nadia	Krishnagar	29·682	29·319	29·783	29·719	+·032	S39°E	103	103·6	67·0	92·7	76·4	84·6	-1·1
		Murshidabad	Berhampore	29·869	29·500	29·707	29·725	+·043	S68°E	69	102·3	66·7	92·0	78·3	85·6	-1·0
		Jessore	Jessore	29·892	29·522	29·743	29·733	+·033	S21°E	70	103·5	68·4	91·8	76·4	83·8	-1·0
		Khulna	.....													
North Bengal.	Rajshahi	Rajshahi	Rampur Boalia	29·868	29·576	29·711	29·731	+·043	S27°E	96	101·0	67·1	90·1	78·5	83·3	-1·1
		Dinajpur	Dinajpur	29·815	29·453	29·639	29·769	+·054	N74°E	87	98·8	66·5	85·2	72·6	80·4	-1·6
		Jalpaiguri	Jalpaiguri	29·663	29·340	29·505	29·769	+·045	N84°E	54	95·4	64·6	87·3	71·0	79·6	-1·7
		Darjeeling	Darjeeling	25·111	24·891	25·017	29·902	+·028	N45°W	80	70·2	46·1	63·1	51·9	57·5	-1·7
		Cooch Behar	Cooch Behar	29·818	29·473	29·663	29·776	—	S79°E	73	94·4	66·1	86·7	73·3	80·0	-
		Rangpur	Rangpur	29·845	29·473	29·657	29·777	+·048	N76°E	87	95·8	67·8	85·4	73·1	79·3	-1·3
		Bogra	Bogra	29·864	29·500	29·729	29·741	+·160	S81°E	63	97·8	67·2	88·1	73·5	80·8	-1·7
		Pabna	Sirajganj	29·893	29·522	29·759	29·758	+·051	N87°E	84	93·3	68·2	87·8	73·6	80·7	-1·5
East Bengal.	Dacca	Dacca	Narayanganj	29·914	29·533	29·734	29·752	+·053	S73°E	120	95·1	69·8	89·9	75·9	82·9	-1·1
		Mymensingh	Mymensingh	29·914	29·511	29·739	29·773	+·050	S85°E	72	95·2	67·6	87·3	74·1	80·8	-1·1
		Faridpur	Faridpur	29·891	29·539	29·756	29·782	+·029	S23°E	80	93·8	67·4	89·0	75·0	82·0	-1·9
		Backergunge	Barisal	30·013	29·642	29·795	29·788	+·051	S13°E	74	95·3	66·1	89·7	73·8	81·8	-1·9
	Chittagong	Tippera	Comilla	29·911	29·517	29·777	29·761	+·043	S39°E	122	95·3	69·3	90·2	74·9	82·6	+·7
		Noakhali	Noakhali	29·952	29·508	29·768	29·758	+·038	S53°E	113	92·7	65·9	88·0	76·2	83·1	·0
		Chittagong	Chittagong	29·879	29·531	29·733	29·768	+·030	S6°E	112	91·5	70·1	88·1	75·8	82·0	-·1
		Chittagong Hill Tracts	.....													
Bihar.	Patna	Patna	Bankipore	29·716	29·385	29·546	29·642	+·031	S45°E	212	100·5	64·8	93·6	75·2	84·4	-·9
		Gaya	Gaya	29·804	29·189	29·336	29·615	+·023	S76°E	103	111·5	69·5	102·0	77·9	89·8	-·9
		Shahabad	Dehri	29·812	29·214	29·353	29·657	+·019	S85°E	211	113·5	70·0	103·5	78·6	91·0	-
			Buxar	29·636	29·321	29·477	29·671	+·030	N87°E	107	111·9	69·1	100·1	76·7	88·4	-1·9
			Arrah	29·707	29·388	29·544	29·687	+·043	N73°E	108	103·9	69·1	98·7	76·3	87·4	-1·1
		Saran	Chapra	29·709	29·387	29·547	29·683	+·031	S84°E	112	106·9	67·1	96·0	74·8	85·4	-1·1
		Champaran	Motihari	29·706	29·313	29·530	29·715	+·043	N60°E	133	103·9	65·8	93·4	73·6	83·6	-1·1
		Muzaffarpur	Muzaffarpur	29·749	29·306	29·578	29·715	+·036	N77°E	162	103·3	65·0	a93·9	a73·5	a83·7	-
		Darbhanga	Darbhanga	29·758	29·304	29·559	29·700	+·040	N81°E	128	103·1	67·5	a93·1	74·2	a83·5	-1·1
	Bhagalpur	Monghyr	.....													
		Bhagalpur	Bhagalpur	29·766	29·414	29·597	29·710	+·043	S85°E	102	106·8	67·1	93·3	74·5	83·9	-1·1
		Purnea	Purnea	29·818	29·464	29·650	29·741	+·033	N65°E	88	103·5	67·1	85·8	73·7	81·8	-1·1
		Malda	Malda	29·847	29·490	29·692	29·716	+·043	S79°E	165	100·1	68·6	89·6	76·5	83·1	-1·1
		Santhal Parganas	Naya Dumka	29·743	29·077	29·288	29·715	+·046	S68°E	78	103·5	67·9	93·4	74·3	83·9	-1·1
Orissa.	Orissa	Cuttack	Cuttack	29·821	29·516	29·690	29·713	+·044	S28°W	117	108·5	70·2	98·9	70·0	89·0	-1·9
			False Point	29·889	29·568	29·760	29·722	+·041	S31°W	316	98·5	69·1	89·7	80·0	84·9	-·9
		Balasore	Balasore	29·871	29·534	29·711	29·703	+·036	S32°W	144	107·5	69·9	99·3	76·8	86·1	-·1
		Puri	Puri	29·922	29·603	29·759	29·721	+·036	S43°W	441	93·7	73·6	80·6	80·9	85·3	-
			Gopalpur	29·853	29·531	29·701	29·714	+·049	S29°W	416	96·2	70·0	83·6	78·5	83·3	-1·9
Chota Nagpur.	Chota Nagpur	Hazaribagh	Hazaribagh	27·870	27·621	27·750	29·603	+·012	S20°W	218	105·1	60·3	97·8	74·3	86·1	-1·3
		Ranchi	Ranchi	27·776	27·516	27·630	29·684	+·033	S39°W	216	103·2	64·9	97·0	73·4	85·2	-1·1
		Palamau	Daltonganj	29·108	28·868	28·981	29·660	—	N82°E	131	115·1	63·5	107·0	77·5	92·3	-
		Manbhum	Purulia	29·097	28·773	28·927	29·686	—	S61°E	130	100·7	67·4	100·4	76·3	88·4	-
		Singhbhum	Chaibasa	29·139	28·837	28·971	29·679	+·031	S27°W	128	111·4	69·0	102·6	76·9	89·8	-1·1
Assam.	.....	Dibrugarh	Dibrugarh	29·657	29·349	29·494	29·810	—	N38°E	96	94·7	65·0	85·2	71·0	78·1	-
		Sibsagar	Sibsagar	29·703	29·287	29·513	29·806	+·041	N53°E	80	92·2	67·0	84·7	71·0	78·0	-1·1
		Tezpur	Tezpur	29·750	29·345	29·553	29·795	—	N78°E	91	93·6	66·9	86·1	73·4	79·8	-
		Kamrup	Gauhati	29·815	29·396	29·614	29·803	—	N14°E	34	94·9	63·0	86·0	73·3	79·7	-·0
		Goalpara	Dhubri	29·846	29·470	29·704	29·773	+·048	S89°E	134	93·2	67·2	85·2	73·3	81·4	+·2
		Cachar	Silchar	29·850	29·463	29·730	29·787	+·032	Calm	17	96·1	66·3	89·1	73·6	84·9	-
		Khasia and Jaintia Hills.	Shillong	25·385	24·969	25·150	25·038	—	S36°W	68	79·1	41·0	73·2	56·5	64·9	-
			Cherrapunji	25·779	25·484	25·678	25·639	—	N2°E	149	78·2	52·0	72·5	60·7	66·6	-

(a) Mean of 30 days.

Bengal for the month of May 1905.

VATIONS.					DISTRICT OBSERVATIONS.										
HUMIDITY.		CLOUD.			RAINFALL—										
					Of month,					Since 16th May 1905.					
Mean, 8 A.M.	Variation from normal mean.	Mean cloud amount, 8 A.M.	Variation from normal mean, 8 A.M.	Rainfall.	Mean of district.	Normal mean.	Variation from mean.	Number of rainy days.	Normal mean number of rainy days.	Mean of district	Normal mean.	Variation.	Mean number of rainy days.	Normal mean number of rainy days.	DISTRICT
82	+0	5·4	+1·6	9·59	6·93	5 03	+1·34	7 60	6 47	2·01	2·97	−0·96	3·40	3·37	Burdwan.
76	—	3·4	—	5 27	7·16	4·07	+3·09	7·80	6 17	2·61	2 63	−0·01	3 17	3·35	Birbhum.
78	—	3 0	—	2·73	4·28	4·36	−0 08	6·00	5·84	0·87	2·75	−1·88	1·60	3 36	Bankura.
75	—	2 4	—	5·11	4·87	5·39	−0·52	7·13	6·98	0·71	2·90	−2·19	1·68	3·88	Midnapore.
					7·33	5 50	+1·83	7·00	7·37	0 69	3 04	−2·35	1·67	3·62	Hooghly.
					6·03	5·27	+1 69	7 33	7·36	0·25	2·57	−2·32	1·33	3 78	Howrah.
81	—4	5·4	−0·5	5·70	8·06	5·40	+2·57	6 63	7·54	0·34	3 00	−2·66	1·13	4·04	24-Parganas.
88	+4	4·4	−0·4	10·01	10·11	5·60	+4·41	8·00	7·46	0·55	2 93	−2·40	1·00	3·68	Calcutta.
84	—	3·7	—	11·52	10·12	6 72	+3 40	8·80	8·30	3·48	3·71	−0 23	3·00	4 64	Nadia.
85	+10	6·1	+0·8	9·01	8·88	5 13	+3·75	8 00	7 30	4 81	3 24	+1·57	2·34	4·19	Murshidabad.
82	—3	5·4	−0 7	7·43	8·96	7·13	+1·83	9·40	9·23	3·90	3·77	+0·13	3 00	4·60	Jessore.
					6 17	6 45	−0·28	7·40	8·17	1 83	3·50	−3·17	1·80	4 12	Khulna.
84	—	4·3	—	8·23	9 56	6·04	+3·52	10·83	7·05	4 70	3 75	+0·95	4·33	4·60	Rajshahi.
83	—	7·1	—	11·55	11·96	6·21	+5 65	10 80	7·50	6·78	3 87	+2·91	4·80	5·58	Dinajpur.
83	—	4·6	—	8·90	10·20	14·31	−4·11	10·00	13·74	6·37	9 03	−2·65	4 67	7·14	Jalpaiguri.
90	+4	7·8	+0·3	10 86	9·03	9·29	(0·33	15·00	13·50	5·94	5 82	+0·12	6·33	7·55	Darjeeling.
87	—	7·0	—	13·49	9·37	14·75	−5·38	11 00	14·58	6·04	9·18	−3 14	4·40	8·00	Cooch Behar.
87	—	4·7	—	20·18	20·53	10·22	+10·30	16·18	10 85	13·06	6·56	+5·50	8·13	6·31	Rangpur.
84	—	5·3	—	12·91	16·65	7·91	+8 74	14·25	9·52	10 70	4 82	+5 88	6 75	5·33	Bogra.
91	—	5·4	—	13 34	12·70	7 00	+5·10	12·00	9·61	7·18	4 44	+2 71	5 50	5 06	Pabna.
87	+3	6·3	+1·1	11·40	11·64	9·61	+2·03	13·40	11·33	5·01	5·53	−0·52	5·20	5·47	Dacca.
85	—	6·1	—	20·65	19·20	11·30	+8·00	15·22	11 81	11·73	6·90	+4·83	7·22	6·42	Mymensingh.
86	—	4·8	—	9·33	0 43	8·37	+1·06	11·67	10·34	3·05	4·61	−1·56	4 33	4 98	Faridpur.
83	—	3·4	—	7 38	6·67	8·58	−1 91	8·43	9·39	1·56	4·91	−3·35	2·50	4 88	Backergunge.
85	—	4·8	—	7 08	9·38	10·30	−0·92	11·09	10·59	2·97	5·71	−2·74	4 00	5·39	Tippera.
82	—	4·9	—	11·00	9·15	10·55	−1·40	9·50	10·74	2 25	6·16	−3·91	3 00	5·54	Noakhali.
83	0	4·5	−1·7	5·52	4·84	11·17	−6·33	8·29	10·70	1·02	7 18	−6 13	3 43	5 81	Chittagong.
					5·43	11·48	−6·05	8·50	12·34	2 47	7·07	−4·60	2·50	5·92	Chittagong Hill Tracts.
69	+8	2·8	−0·4	1·33	1·60	1·75	−0·15	3·33	2·41	1·02	1·17	−0·15	1·67	1·43	Patna.
66	+10	2·5	−0·1	0·48	0·58	1·18	−0·60	1 44	1·76	0 19	0·84	−0·65	0·44	1 15	Gaya.
55	—	5·3	—	0·59											
58	—	2·4	—	0·23	0·64	0 77	−0·13	1·00	1·33	0·21	0·38	−0·17	0 25	1 13	Shahabad.
63	—	0·7	—	1·24											
71	—	2·0	—	2·58	2·14	1·55	+0·59	3 50	2 41	0 93	0·80	+0·13	1 33	1·45	Saran.
73	—	2·3	—	4·20	3·57	2 61	+0 96	5 25	4·05	1·23	1 57	−0·34	2 00	2 43	Champaran.
77	—	1·6	—	3·30	2·90	2·29	+0·61	4·00	3 43	1·13	1·44	−0·32	1·14	2 03	Muzaffarpur.
85	+14	2 0	+0·1	4·04	3·43	2·50	+0·93	5 00	3 06	1·40	1·42	−0·02	1·40	1 89	Darbhanga.
					4·72	2 16	+2·56	4·80	2·91	3·12	1 23	+1·89	3·10	1·42	Monghyr.
77	—	4·1	—	4·57	5·18	3·15	+2·03	6·25	4·23	2 58	2 06	+0·52	2 50	2·38	Bhagalpur.
83	+5	1·4	−2 3	5·62	6·38	5·41	+0·96	6·38	6·59	2·60	3·45	−0·85	2·83	3 70	Purnea.
87	—	3·2	—	11·70	10·07	4·54	+5·53	9·50	5 93	6·33	2 95	+3·38	4·50	3 47	Malda.
82	—	3 9	—	4·37	4·63	2·75	+1·88	5·82	4·26	2 07	1·56	+0·51	2·24	2 53	Santhal Parganas.
78	+8	4·8	+1·2	5·04	4·70	4·23	+0·47	5·96	5·13	0·94	2 96	−2·02	1·43	2·86	Cuttack,
81	—8	6·6	+1·9	2·30											
73	—	4·5	—	2 60	2·71	5 06	−2·35	4·83	6·78	0 94	3 23	−2·29	1 50	3 52	Balasore.
84	—	4·7	—	1·90	4·34	3·13	+1·21	5·67	3·61	1·10	2·03	−0·93	1·50	2 09	Puri.
81	—	2·3	—	5·81											
83	+4	3·2	+0·5	0·86	1·27	1·89	−0·62	2·17	3·34	0·23	1·27	−1·04	0·50	1 96	Hazaribagh.
84	—	1 6	—	3·56	2·36	1 69	+0·67	5·17	3·23	0·34	1 01	−0·77	0·67	1 78	Ranchi.
80	—	0·7	—	0·20	0·16	0 94	−0·78	0·75	1·67	0·01	0·78	−0·75	0·00	1·35	Palamau.
64	—	2·3	—	1·61	2·76	2·81	−0·05	4·29	4·47	0·36	1·80	−1·44	1·43	2·68	Manbhum
66	—	1·6	—	3·12	3·95	3·33	+0·62	7·00	5·35	0·37	2·10	−1·73	2·43	3·44	Singhbhum.
84	—	5 6	—	6·46											Dibrugarh.
91	+2	8·5	+0·4	7·15											Sibsagar.
87	—	6·4	—	8·58											Tezpur.
88	—	7·4	—	10 25											Kamrup.
97	+1	7·5	+2·1	15·43											Goalpara.
88	+1	6·3	−0·6	6·79											Cachar.
80	—	6·3	—	13·32											Khasia and Jaintia Hills.
83	—	7·5	—	41·67											

(b) Mean of 20 days. | (c) Mean of 24 days.

Table of Rainfall recorded at stations

Meteorological Division.	Division.	District.	Station.	1	2	3	4	5	6	7	8	9	10	11	12	13	14	15	16	17	18	19	20
SOUTH-WEST BENGAL.	Burdwan.	Burdwan ...	Kalna ...	0·06	...	1·50	...	...	...	...	...	2·35	...	...	0·45	0·35	...	...	...	...	...	...	...
			Burdwan ...	...	0·35	0·09	2·11	...	...	...	...	3·08	0·50	...	0·25	...	...	...	...	...	...	...	...
			Katwa ...	...	0·82	...	0·91	...	0·02	...	...	1·08	1·31	...	1·08	0·21	...	...	...	...	...	...	...
			Raniganj ...	...	0·50	...	0·09	...	...	...	...	1·06	...	...	1·10	...	...	...	...	...	...	...	...
			Mankur ...	...	...	...	1·40	...	...	...	...	2·37	...	...	1·08	...	...	...	...	...	0·55	...	...
		Birbhum ...	Suri ...	...	0·16	...	1·48	...	0·05	...	...	0·06	0·04	...	0·46	0·01	...	...	...	...	0·33	...	...
			Hetampur ...	...	0·06	...	0·65	...	...	...	...	0·47	...	...	0·45	...	...	0·18	...	...	...	...	...
			Rampur Hat ...	...	1·11	...	0·06	...	0·38	...	...	0·01	1·47	...	1·78	...	...	...	...	...	0·23	...	...
			Bolpur ...	...	...	...	0·52	...	...	...	...	1·50	...	...	1·75	...	...	...	...	...	0·13	...	...
			Murari ...	...	1·53	...	...	...	0·89	...	...	0·40	0·70	...	4·44	...	...	...	...	...	0·14	...	...
			Labpur ...	...	0·35	...	0·05	...	0·03	...	...	1·07	0·14	...	2·85	...	...	...	...	...	0·05	...	...
		Bankura ...	Bankura ...	...	...	...	1·16	...	...	...	...	0·23	...	...	1·71	...	...	...	...	...	...	...	...
			Vishnupur ...	...	0·16	0·43	0·48	...	...	0·51	...	0·78	0·37	...	0·88	...	...	...	...	...	...	...	...
			Maliara ...	...	0·07	0·33	0·60	...	...	...	...	1·71	...	...	0·38	...	...	...	...	...	...	...	...
			Khatra ...	...	...	...	1·12	...	...	0·52	...	0·73	0·56	...	0·02	...	...	...	...	...	...	...	...
			Indas ...	...	...	...	1·32	...	...	...	...	2·00	0·03	...	0·32	...	...	...	...	...	0·26	...	...
			Kotalpur ...	...	0·16	...	0·75	...	...	...	...	0·43	0·81	...	0·68	...	...	...	...	...	...	...	...
			Onda ...	...	0·10	0·20	0·45	...	...	...	...	0·56	0·03	...	0·68	...	...	...	...	...	...	...	...
			Gangajalghati ...	...	...	0·13	...	...	...	...	...	2·15	...	...	0·89	...	...	...	...	...	...	...	...
			Raipur ...	...	...	0·05	0·95	...	...	0·8	...	0·79	0·10	...	1·00	...	...	...	...	...	...	...	...
			Sonamukhi ...	...	...	0·32	0·89	...	...	...	...	1·62	...	...	2·45	...	...	...	...	...	...	...	...
		Midnapore ...	Contai ...	...	0·26	...	1·22	...	...	0·84	...	1·47	0·77	...	0·10	..	...	...	...	...	...	...	...
			Tamluk ...	...	...	...	0·52	...	...	0·55	...	2·00	1·18	...	0·24	0·39	...	...	...	...	...	...	...
			Midnapore ...	...	...	...	0·65	...	...	0·33	...	1·70	0 07	...	1·08	...	...	...	...	...	...	...	...
			Ghatal ...	...	...	0·35	...	...	...	0·09	...	0·05	0·47	...	0·54	0·05	...	...	...	...	...	...	...
			Kukrahaty ...	...	0·07	...	0·64	...	...	0·37	...	1·02	1·03	...	0·35	0·75	...	...	...	...	...	...	...
			Garhbeta ...	...	0·48	0·13	0·30	...	...	0·76	...	0·27	1·30	0·02	0·99	...	...	...	...	...	...	...	...
			Panskura ...	...	...	0·03	0·62	...	...	0·53	...	2·18	0·01	...	0·00	...	...	...	...	...	...	...	...
			Dantan ...	...	0·20	...	0·93	...	...	0·10	...	0·35	0·06	...	0·86	...	...	...	...	...	...	...	...
		Hooghly ...	Serampore ...	...	1·07	0·01	0·91	...	...	0·06	...	3·43	1·70	...	1·01	0·49	...	...	...	...	...	...	...
			Hooghly ...	...	0·37	...	0·88	...	...	...	...	1·50	4·10	...	0·15	0·03	...	...	...	...	...	...	...
			Arambagh (Jahanabad). ...	...	0·07	0·10	0·35	...	...	..	...	1·55	0·91	...	0·84	...	...	...	...	...	...	...	...
		Howrah ...	Howrah ...	...	1·09	..	0·60	...	...	0·10	...	3·06	1·65	...	0·84	0·18	...	...	...	...	...	...	...
			Mohesreka ...	...	...	0·01	0 31	...	...	0·48	...	0·47	2·40	...	2·10	..	...	...	...	...	...	...	...
			Ulubaria ...	...	0·04	...	0·48	...	...	0·18	...	1·13	2·34	...	1·48	0·62	...	...	...	...	...	...	...
			Amta ...	...	...	...	...	...	...	1·48	...	0·54	2·13	...	2·30	0·25	...	...	...	...	...	...	...
	Presidency.	24-Parganas ...	Saugor Island ...	...	0·80	...	0·02	...	...	...	...	2·22	1·28	...	...	...	...	...	...	...	...	...	...
			Diamond Harbour.	0·06	...	...	0·65	...	...	0·23	...	1·82	0·88	...	1·65	...	...	...	...	...	...	...	...
			Budge-Budge ...	...	0·22	...	0·78	...	...	0·18	...	2·35	2·84	...	0·50	1·01	...	...	...	...	...	...	...
			Canning Town ...	...	3·13	...	0·36	...	...	0·05	0·02	2·35	2·32	...	0·59	0·58	...	...	...	...	...	...	...
			Alipore (Obsy.) ...	...	0·99	0·02	0 91	...	...	0·11	...	3·03	2·35	...	1 00	0·43	...	...	...	...	...	...	...
			Barrackpore ...	...	0·33	...	0·84	...	...	0·06	...	3·02	1·85	...	0·04	0·33	...	...	...	...	...	...	...
			Dum-Dum ...	...	1·82	...	0·85	...	...	...	...	3·80	1 40	...	0·76	0·05	...	...	...	...	...	...	...
			Barasat ...	...	0·40	...	0·81	...	...	0·08	...	3·20	3·48	...	0·31	1·15	...	...	...	...	...	...	...
			Basirhat ...	...	...	...	0·88	...	...	...	...	2·02	0·84	...	0·61	0·06	...	...	...	...	...	...	...
		Nadia ...	Ranaghat ...	...	1·60	...	0·38	...	...	...	...	2·32	0·45	...	0·05	0·04	...	...	...	...	...	...	...
			Krishnagar ...	...	1·49	...	0 72	...	...	...	...	2·14	0·60	...	2·90	0·13	...	...	...	...	...	...	...
			Chuadanga ...	...	1·25	...	1·28	...	1·05	...	...	0·58	0·78	...	1·06	...	...	...	...	...	...	...	...
			Meherpur ...	...	0·58	...	0·51	0·47	1·30	...	...	0·83	0·47	...	3 42	...	...	...	...	...	...	...	...
			Kushtia ...	...	1·03	...	0·76	...	1·00	0·09	...	1·12	1·02	...	1·93	0·06	...	...	...	...	...	...	...
		Murshidabad ...	Kandi ...	...	0·67	...	0·08	...	0·30	...	...	0 89	0·82	...	0·83	0·02	...	...	...	...	...	...	...
			Berhampore ...	...	0·82	...	0·55	...	1·16	...	...	1·07	0·41	...	0·28	...	...	...	...	...	...	...	...
			Lalbagh ...	...	1·10	...	0·10	...	1·07	...	...	0·53	1 55	...	0·45	0·50	...	...	...	...	...	...	...
			Azimganj ...	...	0·36	...	0·14	...	0·07	...	...	0·35	0·60	...	1·05	...	...	...	...	...	...	...	...
			Jangipur ...	...	0·34	...	...	...	0·07	...	...	0·13	0·55	...	0·61	0·02	...	...	...	...	...	...	...
			Lalgola ...	...	0·19	...	0·78	...	1·01	...	...	0·48	0·65	...	0·22	...	...	...	...	...	...	...	...
			Akriganj ...	...	0·33	...	1·09	0·02	1·46	...	...	0·40	0·60	...	0·19	...	...	...	...	...	...	...	...
			Patkabari ...	...	1·50	...	...	...	0·70	...	...	0·80	...	...	2·00	...	...	...	...	...	...	...	...
			Dumkal ...	...	0·28	...	...	...	1·10	...	...	0·47	0 98	...	0·20	1·05	...	...	...	...	...	...	...
		Jessore ...	Narail ...	...	1·10	...	1·40	...	...	0·39	...	1·05	0·18	0·30	0·55	0·03	0·11	...	...	...	...	...	...
			Jessore ...	...	1·59	...	1·74	...	...	0·10	...	1·15	0·05	...	0·15	0·02	0·01	...	...	...	...	...	...
			Jhenida ...	...	0·82	...	1·47	...	...	1·27	...	0·08	0·52	...	0·86	...	0·05	...	...	...	...	...	...
			Magura ...	0·27	1·01	0·65	..	...	...	...	0·54	0·65	0·20	...	0·12	1·01	0·03	...	...	...	...	...	...
			Baugaon ...	...	0·62	...	0·58	...	...	...	...	1·52	0·73	...	1·18	...	...	...	...	...	...	...	...
		Khulna ...	Satkhira ...	...	0·16	...	1·34	...	...	...	...	1·76	...	...	2·16	0·57	0·20	...	...	...	...	...	...
			Bagerhat ...	...	0·35	...	0·56	...	...	...	...	1·75	0·20	0·05	1·54	0·20	...	...	...	...	...	...	...
			Khulna ...	...	0 50	0·02	...	...	...	...	...	1·83	0·18	...	0·24	0·16	...	...	...	...	...	...	...
			Kaliganj ...	...	0·47	...	0·66	...	...	...	...	3 52	...	...	1·53	0·16	...	...	...	...	...	...	...
			Nakipur ...	...	...	...	0·58	...	...	...	...	1·82	2·80	...	0·12	0·75	...	...	...	...	...	...	...
			Dumuria ...	...	0·15	...	0·95	...	...	...	...	2·00	0·15	...	2·00	0·56	...	...	...	...	...	...	...
			Rampal ...	...	0·54	...	0·51	...	...	0·06	...	1·45	0·28	...	1·03	0·12	...	...	...	...	...	...	...
			Kalaroa ...	...	0·22	0·90	...	...	...	...	...	1·02	0·09	...	1·55	0·27	...	...	...	...	...	...	...
			Paikgacha ...	...	0·21	...	0·90	...	...	...	...	1·78	0·11	...	0·74	0·08	0·87	...	...	...	...	...	...
			Mollahat ...	...	1·25	...	0·95	...	...	0·12	...	1·45	0·55	...	1·75	...	...	...	...	...	...	...	...
			Morelganj ...	...	0·49	...	0·27	...	...	...	...	1·89	0·47	...	0·76	0·02	...	...	...	...	...	...	...
			Tala ...	...	...	...	0·11	...	...	...	...	1·84	...	...	...	0·18	...	...	...	...	...	...	...
	Rajshahi.	Rajshahi ...	Scalia ...	...	0·41	...	0·52	...	0·75	...	...	0·38	0·66	...	1·13	0·03	...	...	...	...	...	...	...
			Nator ...	...	0·52	...	1·21	...	0·86	0·04	...	0·89	1·30	...	0·38	0·59	...	...	...	...	...	...	...
			Naugaon ...	...	0·65	0·74	...	...	1·43	0·31	...	0·46	0·35	...	0·14	...	...	...	...	...	...	...	...
			Lalpur ...	...	0·91	1·29	...	..	0·62	...	0·70	0·42	...	...	1 71	0·17	...	...	...	...	...	...	...
			Manda ...	...	...	1·00	...	..	...	...	1·00	0·76	1·30	...	0·08	0·12	...	...	...	...	...	...	...
			Mahadebpur ...	0·39	0·91	..	...	...	0·85	0·12	0·02	1·52	0·83	...	...	0·12	...	...	...	...	...	...	...
			Tanor ...	...	0·50	0·12	...	0·13	0·70	...	0·33	0·85	0·93	0·54	...	...	...	...	...	...	...	...	...
		Dinajpur ...	*Nithpur* ...	0·32	0·82	...	...	...	0·81	..	0·03	3·03	0·85	...	...	0·13	...	...	...	...	...	...	...
			Nawabganj ...	...	1·00	...	0·46	0·07	2·03	0·79	1·02	0·18	0·81	0·01	0·01	0·71	...	...	...	...	0·18	0·01	...
			Gangarampur ...	...	0·02	1·00	...	0·63	0·13	0·15	2 30	0·50	...	...	...	...	...	...	...	...	...	...	...
			Dhuraman ...	...	...	0·95	...	...	1·78	0·18	...	0·09	0·02	...	...	...	...	...	...	...	...	...	...
			Raiganj ...	...	0·01	0·60	0·65	0·01	2·07	0·57	0·76	..	0·45	..	...	...	...	...	...	...	...	...	...
			Dinajpur ...	...	...	...	...	0·19	2·46	0·89	0·95	0·02	0·13	...	...	...	...	...	...	...	...	...	...
			Balurghat ...	...	1·68	0·18	0·11	...	1·45	0·90	0·19	1·60	0·45	...	...	0·34	...	...	...	...	...	...	...
			Thakurgaon ...	...	0·16	...	0·73	0 23	2 66	0·88	0·10	...	...	...	...	...	...	...	...	...	0·02	...	...
			Betabgunj ...	0·15	0·65	...	...	...	...	1·12	0·70	0·80	...	0·80	...	...	...	...	...	...	0·13	...	...
			Ramganj ...	...	0·26	...	0·41	0·03	0·74	0·31	0·31	0·62	0·01	...	...	...	...	...	...	...	0·08	...	...
			Aimari ...	..	..	0·18	0·08	...	1·04	0·87	0·07	0·74	...	...	...	...	...	...	...	...	...	...	0·03
			Birganj ...	...	0·37	...	0·32	...	1 66	0·39	0·16	0·02	...	...	0·20	...	...	...	...	...	0·08	...	...
			Parbatipur ...	...	1·04	...	...	0·30	2·38	0·33	1·02	0·55	...	...	...	0·16	...	...	...	...	...	...	...
		Jalpaiguri ...	Jalpaiguri ...	...	...	...	1·15	0·01	3·05	0·25	...	0·47	...	...	...	...	...	...	...	0·05	1·73	0·06	...
			Alipur Duar ...	...	...	...	0·76	...	0·33	0·65	0·32	1·50	...	...	...	0·09	...	...	...	...	7·70	0·18	...
			Falakata ...	...	0·13	...	0·47	..	1·50	0·30	0·17	0·40	...	...	...	...	...	...	...	...	3·80	...	...
			Debiganj ...	...	0·16	0·11	0·00	0·47	1·19	0·07	0·57	0·94	0·07	...	...	...	...	...	...	...	0·65	...	...
			Bhagalpur (*Nagrakatta*). ...	...	0·03	...	1·25	...	1·62	0·13	...	0·09	0·29	...	0·09	...	...	...	...	...	0·57	1·15	0·19	0·25
			Buxa ...	...	...	...	1·00	0·08	0·36	0·09	0·11	0·25	...	...	...	0·03	0·01	0·06	...	1·30	3·75	0·09	0·70
			Kalchini ...	...	...	...	1·11	...	1·54	0·45	0·61	0·83	...	...	...	0·05	0·03	...	...	0 81	4·63	0·11	0·91

in Bengal in May 1905.

21	22	23	24	25	26	27	28	29	30	31	Number of rainy days.	Average number of rainy days.	Total rainfall for the month.	Average rainfall for the month.	Heaviest rainfall during the month.	Total rainfall from 16th to 31st May 1905.	Average rainfall from 16th to 31st May.	Station.	District.	Division.	Meteorological Division.
...	...	...	...	...	0·18	0·11	...	...	0·05	0·35	9	7·10	6·22	5·78	2·35	0·59	3·04	Kalna ...	Burdwan.		
...	...	...	...	...	0·43	0·57	...	1·03	0·03	1·40	8	7·38	9·53	5·56	3·08	3·55	3·27	Burdwan			
...	...	...	...	...	...	...	...	0·15	0·29	1·50	9	7·23	7·38	5·51	1·30	1·94	2·20	Katwa.			
...	...	...	...	...	1·33	...	...	0·19	1·10	...	6	5·18	5·37	3·77	1·23	2·52	2·40	Raniganj.			
...	...	...	...	...	...	..	...	0·35	0·30	0·27	7	5·53	6·23	4·85	2·27	1·47	3·16	Mankur.			
...	...	...	...	...	0·05	0·27	...	0·07	...	0·62	7	5·81	4·20	3·48	1·48	1·34	3·86	Suri	Birbhum.		
...	...	...	...	...	0·37	0·36	...	0·35	0·02	0·10	8	5·88	2·99	3·63	0·65	1·18	2·40	Hetampur.			
...	...	...	...	...	...	...	...	...	...	1·33	7	6·36	7·17	4·01	1·78	1·46	3·34	Rampur Hát.			
...	...	...	...	...	0·18	...	...	0·43	1·14	1·12	8	6·30	6·79	4·96	1·75	3·02	3·28	Bolpur.			
...	...	...	...	...	...	...	...	...	...	4·57	7	6·17	16·49	4·31	4·57	4·71	9·77	Murari.			
...	...	...	...	...	...	...	...	0·06	0·58	2·85	8	6·71	0·33	4·17	3·85	3·94	1·04	Labpur.			
...	...	...	...	...	...	0·02	...	0·01	...	...	3	0·19	2·73	3·56	1·31	0·03	2·33	Bankura ...	Bankura.		
...	...	...	...	...	...	0·02	...	...	...	0·07	7	6·61	3·70	5·05	0·88	0·09	3·01	Vishnupur.			
...	...	...	...	...	1·00	...	...	0·30	0·19	...	7	5·51	4·48	3·93	1·71	1·39	2·18	Maliara.			
...	...	...	...	...	...	...	...	...	...	...	5	5·10	3·55	4·18	1·13	Nil	2·83	Khatra.			
...	...	...	...	...	0·10	...	...	0·10	...	1·45	7	6·03	6·88	5·54	2·00	2·71	3·61	Indas.			
...	...	...	...	...	0·25	...	...	...	...	1·31	7	5·13	4·58	3·18	1·31	1·57	2·40	Kotalpur.			
...	...	...	...	...	...	...	...	...	...	...	5	5·06	1·82	3·51	0·68	Nil	2·19	Onda.			
...	...	...	...	...	0·32	0·39	...	0·44	...	...	6	4·81	4·32	3·77	2·15	1·15	2·59	Gangajalghati.			
...	...	...	...	...	...	...	...	...	...	0·53	6	7·40	4·34	5·59	1·00	0·55	3·31	Raipur.			
...	...	...	...	...	0·74	...	...	0·30	0·11	...	7	4·03	6·71	4·34	2·45	1·34	2·07	Sonamukhi.			
...	...	...	...	...	...	0·06	...	...	...	0·39	8	6·19	6·21	5·07	1·47	1·55	2·29	Contai ...	Midnapore.		
...	...	...	...	...	...	0·33	...	...	...	...	7	6·57	6·13	5·32	2·20	0·35	2·77	Tamluk.			
...	...	...	...	...	...	0·41	...	...	...	1·14	6	7·05	5·27	5·21	1·70	1·55	2·56	Midnapore.			
...	...	...	...	...	...	0·13	...	...	...	0·45	7	7·30	3·72	5·56	0·95	0·57	2·81	Ghatal.			
...	...	...	...	...	...	0·19	0·14	...	...	...	8	6·56	5·14	5·05	1·62	0·33	3·04	Kukrahaty.			
...	...	...	...	...	...	0·01	...	...	...	0·26	9	6·33	5·12	4·88	1·30	0 87	3·16	Garhbeta.			
...	...	...	...	...	...	0·05	...	...	...	0·13	6	5·65	4·74	5·31	2·18	0·17	3·05	Panskura.			
...	...	...	...	...	...	0·01	...	...	0·04	0·25	6	6·63	2·30	5·45	0·93	0·30	2·73	Dantan.			
...	...	...	...	...	0·07	0·03	...	...	0·05	..	6	7·47	6·89	5·34	3·48	0·14	2·01	Serampore	Hooghly.		
...	...	...	...	...	0·36	...	...	...	0·76	0·11	8	7·48	8·56	5·85	4·10	1·23	3·35	Hooghly.			
...	...	...	...	...	0·10	0·04	...	...	...	0·57	7	7·17	4·58	5·31	1·55	0·71	2·93	*Arambagh* (Jahanabad).			
...	...	...	...	...	...	...	...	...	...	0·10	8	7·32	7·07	4·95	3·06	0 10	2·60	Howrah	Howrah.		
...	...	...	...	...	...	0·13	...	...	0 08	...	6	7 24	6·47	5·03	2·40	0·20	2·06	Moheshpur,			
...	...	...	...	...	0·04	0·22	...	...	0·20	...	8	7·22	6·78	5·17	2·34	0·46	3·04	Ulubaria.			
...	...	...	...	...	...	...	...	...	...	...		P		P			P	*Amta.*			
...	...	...	...	...	...	0·29	...	...	...	0·19	6	6·71	5·70	4·75	2·22	0·48	2·75	Sangor Island	24-Parganas.		
...	...	...	...	...	...	0·20	...	...	...	0 03	6	7·35	5·54	5·55	1·82	0·33	2·79	Diamond Harbour.			
...	...	...	...	...	0·05	0·07	0·09	...	...	...	7	P	8·03	P	2·84	0·21	P	*Budge-Budge.*			
...	...	...	...	...	...	...	...	...	...	...	6	8·00	9·36	6·10	3·15	Nil	3 42	Canning Town.			
...	...	...	...	...	...	0·02	...	...	0·47	0·06	8	7·46	10·01	5·80	3·63	0·55	2 05	Alipore (Obsy.).			
...	...	...	...	...	0·06	0·05	...	0 05	0·03	...	6	7·33	8·66	5·21	2·92	0·19	2·72	Barrackpur.			
...	...	...	...	...	...	...	...	...	...	...	5	7·57	8·61	5·58	3·80	Nil	3·06	Dum-Dum.			
...	...	...	...	...	0·12	0·03	...	...	...	0·37	8	7·87	9·02	5·48	3·48	0·51	2·89	Barasat.			
...	...	...	...	...	0·16	...	...	...	0·18	0 33	8	7·70	6·65	5·75	2·62	0·74	3·38	Basirhat.			
...	0·05	...	...	...	0·10	0·02	...	...	0·40	1·10	7	7·29	6·69	5·96	2·22	1·87	3·45	Ranaghat ...	Nadia.		
...	0·03	...	...	...	...	0·03	...	...	0·84	2·34	8	7·74	11·52	6·56	2·84	2·54	3·17	Krishnagar.			
...	...	...	...	...	...	0 20	...	..	1·74	2·40	9	8,90	10·44	7·31	2·40	4·48	4·11	Chuadanga.			
...	...	...	...	...	...	...	0·12	...	0·57	1·60	10	8·32	9 66	6·18	3·41	2·29	3·43	Meherpur.			
...	...	...	...	...	...	...	1·03	0·11	0·25	3·19	10	9·23	12·23	7·51	3·19	5·20	4·37	Kushtia.			
...	...	...	...	...	...	0·07	1·64	0·03	..	5·08	7	7·05	10·42	4·38	5·08	6·81	2·54	Kandi ...	Murshidabad.		
...	...	...	...	...	...	...	0·23	...	0·48	4·01	9	7·75	9·01	4·88	4·01	4·72	3·22	Berhampore			
...	...	...	...	...	...	...	0·25	0·17	1·05	2·33	10	6·91	9·90	5·09	2·53	3·70	3·34	Lalbagh.			
...	...	...	...	...	...	...	0·05	...	2·06	1·59	8	7 11	7·77	5·04	2·06	4·30	3·25	Azimganj.			
...	...	...	...	...	...	...	...	...	0·19	1 08	7	6·81	4·29	4·73	1·06	1·37	2·24	Jangipur.			
...	...	...	...	...	...	...	0·07	...	0·69	1·20	8	7·27	5 29	5·24	1·20	1·96	3·20	Lalgola.			
...	...	...	...	...	...	...	...	..	3·30	7 40	8	7·86	14·87	5·95	7·40	10·70	4·07	Akriganj.			
...	...	...	...	...	...	...	...	...	0·30	4 50	6	7·45	9·80	5·42	4·50	4·80	3·89	Patkabari.			
...	...	...	...	...	...	...	1·33	...	0·35	2·76	9	7·47	8·60	5·46	2·76	4·43	3·15	Dumkal.			
...	...	...	...	...	...	...	0·10	...	0·01	3·20	11	9 87	9·00	6 83	3·20	3·99	3·47	Narail ...	Jessore.		
...	...	...	...	...	...	...	...	0·05	1·01	1·47	7	9·74	7·43	7·35	1·76	2·60	2·97	Jessore.			
...	...	...	...	...	...	...	...	...	3·28	3·90	9	9·13	11·17	6·69	2·90	5·26	3 06	Jhenidah.			
...	...	...	...	...	...	...	0·14	...	0·57	1·60	10	10·10	10·24	8·11	1·50	5·75	4·20	Magura.			
...	...	...	...	...	...	...	1·50	1 30	1·45	1·50	12	7·29	6 97	6·16	1·52	2·34	3·43	Bangaon.			
...	...	...	...	...	0·41	...	...	...	0·54	1·34	8	8·23	8·06	6·30	2·16	1·87	3·35	Satkhira ...	Khulna.		
...	...	...	...	...	0·24	...	...	...	...	1·03	8	8·37	8·37	7 00	1·75	0·93	3·73	Bagerhat.			
...	...	...	...	...	...	...	...	...	0·71	0·22	7	9·03	4·99	6·51	1·88	1·21	3·13	Khulna.			
...	...	...	...	...	...	...	...	...	0·36	0·85	6	P	10·44	P	3·52	3·30	P	*Kaliganj.*			
...	...	...	...	...	...	...	...	...	3·30	...	7	6·36	8·20	5·04	2·80	2·13	3·51	Nakipur.			
...	...	...	...	...	...	...	...	...	1·25	0·89	9	P	7·30	P	2·00	1·43	P	*Dumuria.*			
...	...	...	...	...	0·18	...	0·19	...	..	1·12	7	5·64	4·31	6·75	1·43	0·52	3 80	Rampal.			
...	...	...	...	...	...	...	...	...	0·58	...	7	P	7·40	P	2·50	2·75	P	*Kaiaroa.*			
...	...	...	...	...	0·25	...	...	...	...	2·50	7	P	5·37	P	1·72	0·61	P	*Paikgacha.*			
...	...	...	...	...	...	...	...	...	0·04	...	7	P	8·34	P	1·75	2·27	P	*Mollahat.*			
...	...	...	...	...	...	...	0·09	0·09	0 75	1·35	8	P	4·95	P	1·59	0·47	P	*Morelganj.*			
...	...	...	...	...	...	0·36	...	...	0·04	0·07	7	P	2·13	P	1·84	Nil	P	*Tala.*			
...	...	...	...	...	...	...	...	...	...	...	3										
...	...	...	...	...	...	...	...	...	0·05	3·43	7	7·74	7·36	5·50	3·43	3·48	3·38	Boalia ...	Rajshahi.		
...	...	...	0·04	...	...	0·71	3·06	...	0·38	2·15	11	8·43	11·46	7 47	3·09	6·26	4·34	Nator.			
...	...	...	...	...	1·10	0·70	1,31	...	0·41	0·75	12	7·41	9·51	6·13	1·43	4·29	3·95	Naugaon.			
...	...	...	...	...	0·57	0·10	3·17	0·10	0·01	2·42	13	8·13	13·39	6·47	3·17	6·67	4·31	Lalpur.			
0·30	...	...	...	...	0·70	0·71	...	0·50	0·22	...	10	6·73	6·76	4·75	1·20	2·53	3·14	Manda.			
0·03	...	...	...	...	0·76	0·53	0·95	.	1·21	1·30	12	7·41	9·55	5·86	1·52	4·77	3·27	Mahadebpur.			
...	...	...	...	...	...	0·34	0 06	...	1·95	1·83	11	P	8 08	P	1·95	4·18	P	*Tanor.*			
0·18	...	...	...	...	0·72	1·11	0·12	0·04	2·47	4·24	12	P	14·82	P	4·24	8 85	P	*Nithpur* ...	Dinajpur.		
...	...	...	...	0·03	1·76	1·37	1·29	0·26	1·03	8 87	15	P	21·09	P	8·87	15·24	P	*Nawabganj.*			
...	...	...	...	...	1·59	1·15	2·80	0·06	3·03	5·30	11	P	18·47	P	5·30	13·74	P	*Gangarampur.*			
...	...	...	...	...	1·42	0·06	0·60	...	1·81	0·42	8	6·32	8·07	4·83	1·81	4 51	3·15	Churaman.			
...	...	...	...	...	1·46	0·70	0·07	...	2·23	0·41	10	7·33	11·19	5·83	2·07	5·08	3·30	Raiganj.			
...	...	...	...	...	2·24	0·80	0·32	0 02	0·67	3·16	10	8·23	11·55	7·69	3·16	7·21	4·56	Dinajpur.			
...	...	...	...	...	0·50	2·05	1·06	0·30	2·45	0·70	15	7·06	20·97	5 60	6·70	13·82	3 94	Balughat.			
1·12	...	...	...	...	0·31	...	...	...	0·70	0·22	11	8·08	7·51	7·05	2·66	3·27	4·18	*Thakurgaon.*			
...	...	...	...	...	1 90	0·86	...	0·50	0·35	0·84	12	P	6·93	P	1·90	3·81	P	*Setabganj.*			
0·27	...	...	...	0·05	3·04	2·37	0·15	...	0·90	0·15	13	P	10·56	P	2·27	7·81	P	*Ramganj.*			
...	...	...	...	1·39	0·17	0 21	...	...	...	...	9	P	7·50	P	1·68	3·37	P	*Atwari.*			
...	...	...	...	...	1·42	1·05	0·28	0·08	0·28	0·45	13	P	8·17	P	1·96	6·19	P	*Birganj.*			
...	...	...	...	...	1·47	0·89	0·30	...	0·93	1·90	12	P	10·71	P	2·38	4·94	P	*Parbatipur.*			
0·06	...	...	...	...	1·25	...	...	...	0·02	...	7	12·42	8·23	11·84	3·05	3·30	7·31	Jalpaiguri ...	Jalpaiguri.		
...	...	...	...	0·02	0·02	0·57	0·02	...	..	...	9	13·27	12·66	14·90	7·70	8·51	8·90	Alipur Duars.			
...	...	...	...	1·13	...	...	...	...	...	...	8	13·87	7·79	13·13	3·80	4·93	7·80	Falakata.			
...	0·05	...	...	1·57	0·51	...	0·85	...	0·93	0·02	12	10·71	7·88	9·97	1·37	3·10	6·21	Debiganj.			
...	0·00	...	...	1·59	0·78	0·05	..	..	...	...	13	15·56	10·83	16·76	1·63	6·78	10·73	Bhagatpur (*Nagrakatta*).			
...	0·02	...	...	2·10	1·46	0·03	...	...	...	1·34	11	16·51	13·66	20·24	3·75	11·60	12·94	*Buxa.*			
0·03	0·02	...	...	0·80	1·03	...	...	...	...	...	11	P	11·87	P	4·63	7·74	P	*Kalchini.*			

Table of Rainfall recorded at stations

Bengal in May 1905—*continued*

21	22	23	24	25	26	27	28	29	30	31	Number of rainy days	Average number of rainy days.	Total rainfall for the month	Average rainfall for the month	Heaviest rain fall during the month	Total rainfall from 16th to 31st May 1905	Average rainfall from 16th to 31st May.	Station.	District	Division.	Meteorological division.
·42		...		...	0 67	...	...	...	0 03	0·08	10	12 12	7 53	10 22	2 30	4 88	6 35	Siliguri	Darjeeling	Rajshahi—concluded.	North Bengal—concluded.
·55	0 35		0 71	...	0 53	0 25		0 53	0·78	0 20	21	13 43	10 86	7 82	2 51	5 53	4 75	Darjeeling			
·47	...	0·08	1 31	...	0 77	0 17		0 10	0 74		13	11 33	8·05	5 92	1 47	5 44	8 46	Kalimpong			
·93	...		0 04	...	1 72	0 28	0 09	0·03	...	0 30	16	14 03	8 90	9 01	1 98	5 57	6 58	Mongpoo.			
·84		...			2 89	0 05	0 25	0 35	...	0 01	11	14·58	10 83	12 60	2 89	6·31	8 24	Kurseong.			
·27	0 03	...	1 44	0 03	0 23	0 25	0·02	0 56	0 46	0 45	10	14 88	12 03	9 26	3·27	7·89	4 83	Pedong.			
·72	0 09	...	...	...	...	0·08	0·06	0·11	0 12	0·26	10	14 60	3 59	4 88	0 72	1 79	2 52	Yatung	Tibet		
		...		0 02	0 23	0·02	0 19	...	...	0·35	11	14 63	6 52	14 80	1 20	3 06	9 76	Dinhatta	Cooch Behar		
	...		...	...	0 93	...	1 20	...	...	0 46	12	14 76	12 40	15·26	5·73	8 83	9 02	Cooch Behar			
	0·58	...	...	...	2 16	...	...		0·02	0·13	10	13 05	7 07	12 77	2 16	3 29	8 02	Mekliganj			
...		...			0·35				...	0 01	10	14 18	8 81	13 45	3 67	6 15	8 15	Mathabhanga.			
...	...		...	0 ·1	0 32	2 45	0 02		...	0 10	12	16 00	12 04	17 46	6 02	5 85	10 44	Fulbari			
...	...	...	...	...	0·04	1 93	4·58	1 43	0 65	1 63	15	10 73	18 14	9 44	4 58	11 50	5 50	Bhawaniganj (*Gaibanda*)	Rangpur		
·63	...	...	...	0·42	0·15	1 60	3 20	0 08	2 60	0 90	15	11 19	20 18	10 37	2 00	9 ·2	6 63	Rangpur			
	...			0 79	1 54	0 95	1 70		0 74	7 00	15	9 14	19 72	7 22	7·00	12 75	4 60	Peerganj.			
	...	...	...	0 25	2 40	4 20	2 80	0·25	0 58	1 00	10	13 68	28 07	13 19	4·20	14 98	5 03	Kurigram.			
...	...		...	1 22	0 58	1 70	5·00	3 15	1 85	1 88	16	8 38	25 38	7 75	5 00	16 61	4 46	Gobindganj			
...	0 47	...	...	0 04	2 56	1 25	0·81	0 12	2 05	0·45	18	10 24	13 52	9 85	2·56	9 62	7 05	Bardoora. (*Nilphamari*).			
...		...	...	1 98	1 03	2 03	1 60	0 18	0 88	1 41	17	12·47	18 02	13 85	2 08	10 05	9 14	Ulipur			
...		...	...	4 09	1 41	0 72	4 52	0 32	0 48	1 09	18	11 00	21 10	10 06	4 52	11 05	6 00	Sunderganj			
·65		...	...		0 30	1 32	1 00	...	0 80	1 20	13	?	11 40	?	1·75	6 37	?	*Saidpur.*			
...		...	...		1 08	0 92	0 98	0 26	1 25	0·86	13	10 18	9 21	7 08	1·25	5 30	4 90	Sherpur ..	Bogra		
...	...			0 83	0·98	0 90	7 00	0·15	1 28	1·05	16	10 46	17·45	8 17	7·00	12 71	4 89	Nowkhilla.			
...	...		...		0 97	0 68	3·63	0 70	3 60	0 72	12	9 77	12 01	8 6	3·03	9 70	4 92	Bogra			
...	...	...		1·56	2·27	0 30	0 40	1·13	4 40	7 03	16	7 76	27 05	7 12	7 03	15 09	4 46	Panchbibi			
...	...		...	...		0 13	1 78	0 71	0 32	2 25	11	9·06	19 06	7 26	2 05	5 10	4 02	Pabna ...	Pabna.		
...	...	...		...	0 06	1·75	1 30	0 80	4 30	0 05	13	10 16	18 34	7 95	4 30	9 11	4 85	Sirajganj.			
...			...	...	...	0 69	0·24	0·58	0 56	0 75	13	11 07	11 40	9 7·	1 66	2··2	5 41	Munshiganj ...	Dacca.	Dacca.	East Bengal.
...	...	0·01	...	0 08	...	1 38	1 22	1 10	1 11	1 14	12	11 30	12 60	9 30	3 32	6 13	5 61	Dacca			
		...	...	...	...	0 96	0 41	1·02	1 35	0 74	12	11 53	11 68	9 75	1 50	4 42	5 59	Narayanganj			
...	...	...			...	1 45	0·97	1 45		1 10	10	11 00	10 00	9 02	1 45	5 03	4 85	Manikganj.			
...	...	...	...	0·27	...	0 95	0 42	0 10	1 40	2 35	15	11 67	12 32	10 11	2 35	6 59	6 21	Jaydebpur.			
...	...	...	...	0·18	...	2 12	2 05	2 30	0·30	2 63	16	12 27	17 51	11 87	2 63	0·93	6 90	Kishorganj	Mymensingh.		
...	...			1 12	0 10	0·18	1 89	0 12	3 50	0 60	15	10 37	13·25	8 20	3 50	6 35	4 70	Atia (*Tangail*)			
...	...	0 43	...	0 72	...	5 58	6 82	0 56	0 50	0·57	16	13 48	20 66	12 05	6 82	15 76	6·95	Mymensingh			
...	...	...	...	0 65	1 68	0 85	4 15	0 2·	2 80		16	10 57	20 62	9 26	4 15	11 16	4 97	Jamalpur			
...	...	...		0 08	0 06	3 32	4 90	0 08	1 45	0 66	12	13 23	17 79	13 84	4 90	11 28	8 05	Netrakona			
...	...	...		0 14	...	2 95	2 08	0 54	1 54	0 85	17	9·07	18 67	7 88	2 08	8 61	4 06	Pingna			
...	...	0 47				2·86	6 46	1 57	2 63	0 70	14	14 14	22 55	17 14	6 46	14 97	11 25	Durgapur			
	...	...		0·12	1 25	0 59	3 50	0 72	4 75	0 43	16	11 63	20 27	10 12	4·75	11 00	5 82	Sherpur Town			
...		...	0 05	3 50	2 21	2 39	2 28	2 51		1 04	15	11 07	27 42	11·26	7·74	14 33	7 09	Diwanganj.			
	...	...	0 09	...	3 21	...	4 44	0 30	0 88	0 19	14	?	19 25	?	4 44	9 60	?	*Nalitabari.*			
...	...	...	...	...	...	0 20	0 30	1 70	0 15	0 40	13	10 10	7 70	8 29	1 30	2 35	4 05	Madaripur	Faridpur		
...	...	...		...	...	0 04	0 85	0 23	0 02	0 74	11	10 72	9 81	8 51	1 50	1 87	5 00	Faridpur.			
...	...	...		...	...	0 79	2 03	0 48	0 93	0 72	11	10 81	11 27	8 81	2 03	4 94	4 01	Goalundo			
...			...	...	...	...	...			0·03	6	9 28	6 37	8 10	1 96	0 11	4·30	Patuakhali	Backergunge		
	...	...	...	...	...	...	...	1 11	0 66	0 16	9	9 10	6 81	7 82	1 82	1·93	4 22	Pirojpur			
			...		...	...	...	0 03	1·06	0 05	9	9 84	7·75	7 95	2 22	2 13	4 47	Barisal			
...	...	...	...	...	...		...	0 55	0 45	0 85	9	8 40	6 75	7 77	1 82	1 85	4 25	Gaurnadi			
...	...	...		...		...	...	0 41	0 05	1 45	11	10 33	7 29	7 70	1 45	2 75	4 45	Bhola			
...	...	...		...	...		...	...	0 53	0 77	8	9 56	7·01	11·82	2·70	1 31	6 58	Daulatkhan			
...		0 39	...	...			...			0 45	7	9 30	4·78	9 42	1 12	0 84	5·57	Bauphal			
												11 46		11 34			5 84	Agartala ...	Hill Tippera	Chittagong.	
...		...		...	...			0 65	0 35	...	10	11 89	7 65	10 94	1 46	1 01	5 80	Comilla ..	Tippera.		
...	...				...		0 23	0 18	0 98	1 43	11	11 23	9 87	9 64	1 95	2 82	4 95	Chandpur			
...	...			0 43	...	2 45		1 05	0 65	0 30	13	12 30	11 36	11 84	2 45	5·07	6 00	Brahmanbaria			
	...	...	...	...	...	1 86		0 44		0 45	10	9 67	9 56	8 29	3 40	3 18	4 86	Ramchandrapur			
...		...	0 44	0 75	2 65	0 25	1 75	0 85	0 45	1·15	16	10 40	13 83	11 85	3 50	8 29	7 16	Nasirnagar.			
...		...				0·39	0 18	0 20		1·20	11	9 33	7·61	8·66	1 36	1·93	5 06	Daudkandi			
...	...	...	...	0 07	...	1 33	0·05	0 23	0 22	0 50	12	9·87	8 28	10 27	1 30	3 18	6 24	Kasba.			
...		...	...	...	...		...		...	0 34	7	9·20	8 45	9 09	2 70	0 34	5 04	Laksam.			
...	...	...	...	...	...			0 82	0 95	1 40	11	10 45	11·90	10 07	2 93	3 17	5 89	Noakhali	Noakhali		
...	...	...	...	...	...		0 02	0·30	2 80	0 05	11	11 83	9 14	10 99	2 80	3 07	6 14	Fenny			
...		...		...				...	0 60	0 09	7	10 47	8 49	11 59	3 00	0 09	6 89	Harishpur.			
...		...		...	...	...			1 08	1 00	9	10 20	7 08	9 56	1 13	2 08	5 72	Ramganj			
...	0 15	0 08	...	...	...		...	0·26	0·48	0·02	12	?	6 76	?	1·85	0 99		*Chhagalnaya.*			
			...	...	...	0 21	...	0 47		0·72	10	?	13 66	?	6 33	1 40	?	*Hatya*			
...		...	...	...	...	...	...	...	0 37	1·12	10	?	7·97	?	1·55	1 40	?	*Lakhmipur.*			
	0 15							...	...	0 08	7	9 87	5 11	10·62	2 47	0 40	6 44	Cox's Bazar	Chittagong.		
...	0·06	0·42	...	...	...	...	...		0 06	...	10	10·55	4 98	9 68	1 45	0 56	5 84	Chittagong			
		...	...	...	...	...	...	...			9	9 07	4 89	10·84	4 54	Nil	7 76	Kutubdia.			
0 32	0 21	...	...	...	...	...	...	...	0 15		10	10·20	3 65	10 05	0 52	0·71	6 47	Satkania			
0·05		...	...	...		...	...		2·01	0 24	8	10 44	4 18	11 55	2 61	3 01	6 18	Kadala.			
0 01	0 72	...	...	...	...	...	...		0 93	0 20	10	12·00	4 93	13 46	0·93	1 86	9 07	Fenoa			
...		...	...	...	...	...		0 12	0 03	0 12	11	12 75	5 06	12 04	2 23	0 62	7 08	Mirsarai			
...	1 26	1 01	...	...		...			0 03	0 94	9	11 07	5 75	10 82	1 26	3 25	5 69	Rangamati.	Chittagong Hill Tracts		
...	1 20	0 04	...	...		...				0 36	8	12 70	5 11	12 14	1 20	1 68	5 50	Bandarban.			
...	0 29	0 87		...				0·25	0 71	0·27	13	?	4 57	?	0 87	2 30	?	*Barkal.*			
...		...		...	0 16	0 34				...	2	2 07	1 35	1 70	0 58	0 50	1 21	Patna	Patna	Patna.	Bihar.
...	...				0 05	0·30		...	...		2	2 32	0·66	1 56	0 30	0 35	1 05	Dinapore			
...	...	...				0 51	...	...	1·08	...	3	2 71	2 04	1 89	1 08	1 59	1 13	Bihar			
...	...	...			0 56	0 69			...		4	2 32	1 91	1 93	0 69	1 25	1 13	Barh			
...	...	...	...	...		0·70		...		...	2	1 71	1 04	1·70	0 70	0 70	1 32	Bikram			
...		...	...	...	...	1 03		...	0·69	...	3	2 43	2·57	1 72	1 03	1 72	1 16	Hilsa			
				...	...		...					?		?			?	*Islampur.*			
...		...	...	...	...	0 10	...	...	0 84		3	?	1 06	?	0 84	1 24	?	*Asthawan*			
...		...			...	...		...	...	...	2	1 77	1 06	1·19	0 96	Nil	0 90	Aurangabad	Gaya.		
...		...								...	1	1 94	0 48	1 08	0·42	Nil	0 87	Gaya			
...	...	...	...	...		0·17	...		0 23		3	2 30	0 74	1 59	0 35	0 40	1 09	Nawada			
...			...	...		0 17	...				1	1 96	0·23	1 32	0 17	0 17	0 88	Jahanabad			
...		...	...		...	0·06	...	...	...	...	Nil	2 27	0 10	1 42	0 06	0 06	0·08	Arwal.			
	...	...	...		...		...	...	...	...	2	1·00	0·43	0 85	0 28	Nil	0 63	Daudnagar.			
...	...			...		...	...	...	...	...	1	1 21	0 42	0 74	0 35	Nil	0 59	Sherghati			
...	...			...	...	...		...	...			1 53		1·26			1 00	Rajauli.			
...						0·05			1 00	...	2	2 00	1 19	1 18	1 00	1·05	0 63	Pakri Barawan.			
...	...	...		...	...	...	...	...	...	...	2	?	1 10	?	0 50	Nil	?	*Deo*			
...	...	...	...	...	...	...	...	...	...	...	2	?	0 60	?	0 27	Nil	?	*Nabinagar.*			

Table of Rainfall recorded at station

Meteorological Division.	Division.	District.	Station.	1	2	3	4	5	6	7	8	9	10	11	12	13	14	15	16	17	18	19	20
BIHAR—concluded.	Patna—concluded.	Shahabad	Buxar	...	...	...	...	...	...	...	0·14	...	...	...	...	...	...	...	...	...	...	...	
			Dehri	...	...	...	...	...	...	...	0·05	...	...	...	0·54	...	...	...	...	...	...	...	
			Rhotas	...	...	...	...	...	...	...	...	...	...	1·76	...	...	...	...	...	...	...	...	
			Sasaram	...	...	...	...	...	...	...	0·02	...	...	...	1·11	...	...	...	...	...	...	...	
			Arrah	...	...	...	...	...	...	...	0·13	0·02	...	...	0·11	...	...	...	...	...	...	...	
			Mohanea	...																			
			Ageaon	...	...	...	...	...	...	...	0·10	...	...	...	...	...	...	...	...	...	...	...	
			Ramagar	...	...	...	...	...	...	...	0·11	...	...	...	...	...	...	...	...	...	...	...	
			Koath	...	...	...	...	...	...	...	0·04	...	...	...	...	...	...	...	...	...	...	...	
			Sikroul	...	...	...	...	...	...	...	0·06	...	...	...	...	...	...	...	...	...	...	...	
			Bansowan	...	...	...	...	...	...	...	0·17	...	...	...	0·83	...	...	...	...	...	...	...	
			Monaharpur	...	...	...	...	...	...	...	0·07	...	...	...	0·05	...	...	...	...	...	...	...	
		Saran	Gopalganj	...	...	0·87	...	...	0·08	..	...	0·35	...	...	...	...	...	...	...	...	...	...	
			Siwan	...	...	...	...	...	0·60	...	0·03	0·38	...	...	...	...	...	...	...	...	...	...	
			Ekma	...	...	0·01	...	...	0·70	...	0·01	0·06	...	...	0·15	...	...	...	...	...	...	...	
			Chapra	...	...	...	...	...	0·68	...	0·09	0·04	...	...	1·10	...	...	...	...	...	...	...	
			Hathwa	...	...	1·12	...	...	0·29	...	0·06	0·55	...	...	...	...	...	...	...	...	...	...	
			Amnor	...	...	...	...	...	0·31	...	...	0·45	...	...	...	...	...	...	...	...	...	...	
			Basantpur	...	...	0·02	...	...	0·10	...	0·02	0·70	...	...	...	...	...	...	...	...	...	...	
			Darauli	...	...	0·10	...	...	0·10	..	0·06	0·09	...	...	0·10	...	...	...	...	...	...	...	
			Bhorah	...	...	0·02	...	...	0·25	...	...	...	...	...	...	...	...	...	...	...	...	...	
			Sripur	...	...	1·04	...	...	0·40	...	...	0·50	...	...	...	...	...	...	...	...	...	...	
		Champaran	Motihari	...	...	0·06	0·09	...	0·47	...	...	0·95	..	...	...	...	...	...	...	...	...	...	
			Bettiah	...	...	1·40	...	...	0·45	...	0·50	0·81	...	0·03	...	...	...	...	...	...	...	...	
			Bagaha	...	...	0·45	...	...	1·29	...	...	0·50	...	0·10	...	...	...	...	...	...	...	...	
			Burhurwa	...	...	0·91	...	...		...	...	0·81	...	...	...	...	...	...	...	...	...	...	
			Ramnagar	...	...	...	...	...	0·75	...	...	0·30	...	...	...	...	...	...	...	...	...	...	
			Sankarpur	...	...	0·20	...	...	0·50	...	0·09	0·83	..	...	...	...	...	...	...	...	...	...	
			Kissoriah	...	...	1·13	...	...	0·45	...	...	1·13	...	...	...	...	...	...	...	...	...	...	
			Dhanaha	...	...	0·90	...	...	0·25	...	...	1·30	...	...	...	...	...	...	...	...	...	...	
		Muzaffarpur	Sitamarhi	...	...	0·43	0·09	...	0·78	...	0 16	1·11	...	...	...	...	...	...	...	...	...	...	
			Muzaffarpur	...	...	0·70	0·45	...	0 85	...	...	0·47	...	...	...	...	...	...	...	...	...	...	
			Hajipur	...	...	...	...	...	1·21	...	0·01	0·48	...	...	0·37	...	...	...	...	...	...	...	
			Paru	...	...	0·80	...	...	0·1	...	...	0·35	...	...	...	...	...	...	...	...	...	...	
			Mahua	...	...	...	...	...	0·45		...	0·28	...	...	...	...	...	...	...	...	...	...	
			Shiuhar	...	...	0·80	...	...	...	...	...	1·25	...	...	...	...	...	...	...	...	...	...	
			Pupri	...	...	...	...	...	...	...	0·70	...	0·50	...	...	...	...	...	...	...	...	...	
		Darbhanga	Tajpur (Samastipur).	...	...	...	...	...	0·43	...	...	0 91	...	...	0 02	...	...	...	...	...	...	...	
			Darbhanga	...	...	0·80	0·22	...	0·50	...	...	0 71	...	...	0·07	...	...	...	...	...	...	...	
			Madhubani	...	...	0·33	0·10	...	0·76	...	0·04	0 37	...	...	0·04	...	...	...	...	...	...	...	
			Baheta	...	...	0·66	0·04	...	1·06	...	...	0 79	...	...	0,18	...	...	...	...	...	...	...	
			Rosera	...	...	...	...	...	0·36	...	...	1·30	.	...	...	...	...	...	...	...	...	...	
			Khutonia	...	...	0·65	0·02	.	0·63	0·14	...	0·44	...	...	...	...	...	...	...	...	...	...	
			Ladania	...	..	...	0·84	...	0·58	0·31	0·36	0·67	...	...	...	...	...	...	...	...	...	...	
			Laukahi	...	...	...	0·53	...	1·32														
		Monghyr	Begusarai	...	...	...	...	0·23		...	...	0·40	...	...	...	...	...	...	...	...	...	...	
			Monghyr	...	...	...	...	...	0·92	...	...	0·54	1·16	...	...	...	...	...	...	...	...	...	
			Jamui	...	...	...	...	...	...	...	0·04	0 23	...	...	0·37	...	...	...	...	...	...	...	
			Gogri	...	...	0 43	...	...	0·85	...	...	1·13	1·45	...	...	...	...	...	...	...	...	...	
			Jamalpur	...	...	...	...	...	0·45	...	...	0·63	0·78	...	0·52	...	...	...	...	...	...	...	
			Shaikhpura	...	...	...	...	...	...	...	...	0·38	...	...	0·44	...	...	...	...	...	...	...	
			Chakai Ramdia	...	0·14	...	...	...	0·04	...	...	0·06	...	...	1 31	...	...	...	...	...	...	...	
			Chupreon	...	...	0·80	...	...	0·50	...	...	0·18	...	...	...	...	...	...	...	...	...	...	
			Gidhour	...	...	...	...	...	0·50	...	0·47	0·08	...	...	0·84	...	...	...	...	...	...	...	
			Kharagpur	...	...	...	...	...	0·25	...	...	0·41	...	...	0 28	...	...	...	...	...	...	...	
		Bhagalpur	Madhipura	...	...	1·30	0·10	...	0·30	...	...	0·67	...	...	...	...	...	...	...	...	...	...	
			Bangaon (Sylhabad).	...	...	0 55	0·25	..	0·85	...	...	0·50	...	...	...	...	...	...	...	...	...	...	
			Supaul	...	...	0 15	1·21	. .	0·33	...	0·55	0·44	..	...	...	...	...	...	...	...	...	...	
			Pratapganj	...	1·03	...	...	...	0·37	0·45	0·77	...	...	...	...	...	...	...	...	...	...	...	
			Bhagalpur	...	...	...	...	...	1·15	..	...	0·71	1·61	...	...	...	...	...	...	...	...	...	
			Banka	...	0·11	...	...	...	0·67	...	...	...	0·30	...	1·10	...	...	...	...	...	...	...	
			Colgong	...	...	0·40	...	...	0·38	.	.	2·30	...	...	...	...	...	...	...	...	...	...	
			Hansil	...	...	...	...	...	0·45	...	..	...	0 26	...	0·26	...	...	...	...	...	...	...	
		Purnea	Kishanganj	...	1·23	...	1·38	...	2·50	...	...	1·83	...	...	...	...	...	...	...	...	0·37	...	
			Araria	...	...	...	1·37	...	1·69	...	0·30	1·70	...	...	...	...	...	...	...	...	...	...	
			Purnea	...	...	0·02	0·87	...	1·13	0·10	...	0·04	0·23	...	...	...	...	...	...	...	...	...	
			Gondwara (*Korah*).	...	...	...	...	...	0 90	..	...	0·24	...	...	...	...	...	...	...	...	...	...	
			Barsoe	...	...	...	0·58	1·00	0·70	0·09	...	...	...	...	...	...	...	...	...	...	...	...	
			Forbesganj	...	...	...	...	1·30	0·83	...	0·40	0·43	0 10	...	...	...	...	...	...	...	0·50	...	
			Kaliagan	...	...	...	...	0·50	2·48	...	...	...	...	...	...	...	...	...	...	...	...	...	
		Malda	Malda	...	1·00	0·66	...	...	0·83	...	...	1 24	1·28	...	...	...	...	...	...	...	...	...	
			Chanchal	...	...	0·57	0·50	...	1·08	...	...	0 08	1·00	...	...	0·03	...	...	...	...	...	...	
			Gajol	...	0·40	0·10	...	...	0·80	...	...	0·10	0·08	...	0·08	...	...	...	...	...	...	...	
			Sibganj	...	1·18	0·41	...	...	0 47	.	...	0·50	1·40	..	0·40	...	...	...	...	...	...	...	
			Gomastapur	...	1·57	0·47	...	...	0·76	...	...	1 91	1·72	...	0·17	0·02	...	...	...	...	...	...	
			Nawabganj	...	0·83	0·31	0·32	...	0·84	...	...	0·33	0 73	...	0 34	0·06	...	...	...	...	...	...	...	
		Santhal Parganas	Rajmahal	...	0·03	0·27	..	...	0·97	...	...	0·18	1·18	...	...	...	...	...	...	...	0·55	...	
			Godda	...	0 03	...	...	...	0·60	...	...	...	0·53	...	0·19	...	...	...	...	...	...	...	
			Pakaur	...	0·34	0·06	...	...	1·30	...	...	0·45	0·76	...	1·30	...	...	...	...	...	0·34	...	
			Naya Dumka	...	0·07	...	1·47	...	0 02	...	...	0·27	0·04	...	1·57	0·09	...	...	...	...	0·06	...	
			Deoghur	..	..	...	...	...	0·16	...	...	...	...	...	0·58	...	...	...	...	...	...	...	
			Jamtara	...	0·31	...	...	...	...	...	...	0·80	...	...	0·66	...	...	...	...	...	...	...	
			Mohagama	...	...	...	...	...	1·11	...	...	...	2·18	...	...	...	...	...	...	...	...	...	
			Nonihat	...	...	...	0·18	...	0·31	...	...	...	...	...	0·17	...	...	...	...	...	...	...	
			Asansoni	0·13	.	1·36	...	...	0·05	.	0·79	0·36	...	0·36	0·18	...	...	...	...	...	0·76	...	
			Katikund	...	...	...	0·70	...	...	...	...	0·52	0·60	...	0·20	...	...	...	...	...	0·16	...	
			Madhapur	...	...	...	...	...	..	.	...	...	...	...	2·00	...	...	...	...	...	...	...	
			Sarwan	...	...	...	...	...	...	...	...	...	...	...	1·66	...	...	...	...	...	...	...	
			Sarath	...	0·36	...	...	...	...	...	...	...	...	...	1·30	...	...	...	...	...	...	...	
			Barkops	...	...	...	...	...	0 70	...	...	...	1·86	...	...	...	...	...	...	...	...	...	
			bhagya	...	...	0 75	...	...	1·35	...	...	...	0·90	...	0·25	...	...	...	...	...	...	...	
			Mohespur	...	1·02	...	...	...	1·21	...	...	0·43	0·84	...	1·74	...	...	...	...	...	0 95	...	
			Hiranpur	0·08	0·07	...	...	...	1 28	...	0·21	1·13	...	...	0 80	...	...	...	...	...	...	...	
			Harharwa	...	0·44	0·43	...	...	0·86	...	0·04	0·40	0·60	...	0 87	...	...	...	...	...	0·60	...	
			Mahibganj	...	...	0·05	...	...	1·21	...	...	...	1·63	...	0·31	...	...	...	...	...	...	...	
			Barlo	...	0·03	0 21	...	...	0·18	...	...	0·09	1·12	...	...	...	...	...	...	...	...	...	

...n Bengal in May 1905—*continued*.

21	22	23	24	25	26	27	28	29	30	31	Number of rainy days.	Average number of rainy days.	Total rainfall for the month.	Average rainfall for the month.	Heaviest rainfall during the month.	Total rainfall from 16th to 31st May 1905.	Average rainfall from 16th to 31st May.	Station.	District.	Division.	Meteorological Division.
...	...	...	...	...	...	0·08	...	...	...	...	1	1·97	0·23	0·80	0·14	0·08	0·50	Buxar ...	Shahabad.	Patna—concluded.	BIHAR—concluded.
...	...	...	...	...	...	..	...	...	...	...	1	1·47	0 59	0·82	0 54	Nil.	0·59	Dehri			
...	...	...	...	...	...	...	...	...	...	...	1	1 55	1·76	0 85	1·76	Nil.	0·44	Bhabhua.			
...	...	...	...	...	...	...	...	...	...	...	1	1·87	1·13	0 96	1 11	Nil.	0·55	Sasaram.			
...	...	...	...	...	...	0 98	...	...	...	...	3	2 45	1·24	1·47	0·98	0 98	1·05	Arrah.			
												0·43		0·47			0·00	Mohania.			
...	...	...	...	...	...	0·58	...	...	...	...	2	1·74	0·68	0 80	0·54	0·58	0·38	Agiaon.			
...	...	...	...	...	...	0 82	...	...	...	...	2	1·22	0·93	0 74	0·81	0·82	0·23	Ramgarh.			
...	...	...	...	...	...	...	...	...	...	...	Nil.	0·78	0·04	0·37	0·04	Nil.	0·23	Koath.			
...	...	...	...	...	...	0 03	...	...	...	...	Nil.	1 00	0·09	0 90	0·06	0·03	0·30	Sikroul.			
...	...	...	...	...	...	...	...	...	...	...	2	0 66	0·10	0 38	0·08	Nil.	0·47	Bassowan.			
...	...	...	...	...	...	...	...	...	...	...	Nil.	1 00	0 12	0 67	0·07	Nil.	0·10	Monaharpur.			
...	...	...	...	...	0·30	0·25	...	...	...	...	4	3·49	1·73	2·42	0·87	0·55	1·28	Gopalganj ...	Saran.		
...	...	...	...	...	...	1·19	...	...	...	...	3	2·71	2·10	1 62	1 19	1·19	0·98	Siwan.			
...	...	...	...	...	...	0·75	...	...	...	...	3	1·29	1·72	0·76	0 75	0 75	0 83	Ekma.			
...	...	...	...	...	0·01	0·55	...	...	...	...	3	3·13	2·56	1·35	1·19	0 56	0·85	Chapra.			
...	...	...	...	...	...	0·82	...	...	...	...	4	?	2·84	?	1·12	0 82		*Hathwa.*			
...	...	...	...	...	0 66	0 02	...	...	...	...	3	2·43	1·44	1 44	0 66	0 68	0 75	Amnor.			
...	...	...	...	...	0·12	0·65	...	...	...	...	5	2·43	3·21	1·73	0 65	1·77	0 65	Basantpur.			
...	...	...	...	...	...	1·25	...	...	...	...	4	?	1·76	?	1 25	1·25	?	*Darauli.*			
...	...	...	...	...	...	0·37	...	...	...	...	3	?	1·51	?	0·92	0·57	?	*Bhoreh.*			
...	...	...	...	...	0·23	0·22	...	...	...	...	5	?	2·39	?	1·04	0·45	?	*Sripur.*			
...	...	...	...	...	1·30	...	...	...	0·43	...	5	4·25	4·20	2·65	1·30	1·73	1 87	Motihari ...	Champaran.		
...	...	...	...	...	0·80	...	...	...	0·25	...	6	3·49	4·08	2 73	[illegible]	1·05	1·31	Bettiah.			
...	...	...	...	...	0·13	...	...	...	0·21	0·34	7	4·17	3·00	3 01	1·29	0 68	1·90	Bagaha.			
...	...	...	...	...	1·47	...	...	...	...	...	3	3 60	2 19	2·08	1·47	1·67	1·16	Burhurwa.			
...	...	...	...	...	0·05	...	...	...	0·17	0 05	2	?	1·23		0·75	0·17	?	*Ramnagar.*			
...	...	...	...	...	0 06	...	...	...	0·13	0 05	4	?	1·80	?	0·63	0·74	?	*Shikarpur.*			
...	...	...	...	...	0·50	0·08	...	...	...	...	4	?	3 27	?	1·12	0 58	?	*Kessariah.*			
...	...	...	...	...	1·10	...	...	...	...	1·02	5	?	4·57	?	1·30	2 12	?	*Dhanaha.*			
...	...	...	...	...	1·16	...	...	...	...	...	5	4·73	3·69	2·65	1 16	1·16	1·58	Sitamarhi	Muzaffarpur.		
...	...	...	...	...	1·10	0·02	...	...	...	...	5	3 61	3·59	2·41	1·10	1·12	1 20	Muzaffarpur.			
...	...	...	...	...	0·79	0·33	...	...	...	...	5	3·63	3·19	1·76	1 2[illegible]	1·12	1·01	Hajipur.			
...	...	...	...	...	...	...	...	...	...	...	3	2 67	1 10	2·18	0 50	Nil.	1 43	Paru.			
...	...	...	...	...	0·57	0·57	...	...	...	...	4	2 67	2·11	2·16	0·57	1·14	1·48	Mahua.			
...	...	...	...	...	1·70	...	...	...	...	...	3	3·20	3·75	2·13	1·70	1·70	1·42	Shiuhar.			
...	...	...	...	...	1·60	...	...	...	...	...	3	4·35	2·80	2·85	1 60	1·60	2·10	Pupri.			
...	...	...	...	...	0·29	0·19	...	...	...	...	4	3·00	1·84	2·26	0·91	0 45	1 10	Tajpur (Samastipur).	Darbhanga.		
...	...	...	...	...	1·65	0·09	...	...	...	...	5	3·93	4·04	2·70	1·65	1·74	1·35	Darbhanga.			
...	...	...	...	...	1·68	...	...	...	...	...	5	4 80	3·34	2 91	1·68	1·68	1·70	Madhubani.			
...	...	...	...	...	2·21	0·12	...	...	...	...	7	3·87	5·52	3 60	2 21	2 33	1·72	Bahera.			
...	...	...	...	...	0 47	0·30	...	...	...	...	4	3 00	2 63	2·37	1·30	0·77	1 23	Rosera.			
...	...	...	...	...	0·50	0·12	...	...	...	...	6	?	2 51	?	0 64	0·62	?	*Khutonia.*			
...	...	...	...	...	0·41	0·11	...	...	...	...	7	?	3·28	?	0 84	0 52	?	*Ladania.*			
...	...	...	...	...	2·30	0·20	...	...	...	...		?		?	2 30	2·50	?	*Laukahi.*			
...	...	...	...	...	0·85	0·85	...	...	4·38	...	5	2·84	6·21	2·14	4·38	5·58	1·18	Begusarai ...	Monghyr.	Bhagalpur.	
...	...	...	...	...	0·48	0·92	...	...	3·80	...	6	2·90	7·80	2·18	3·80	5·20	1·56	Monghyr.			
...	...	...	...	...	...	0 01	...	...	2·36	...	3	3 32	3·01	1·88	2 36	2·37	1·16	Jamui.			
...	...	...	...	...	0·83	1·45	...	...	...	...	6	2·80	6·14	3·66	1·45	2 28	2 34	Gogri.			
...	...	...	...	...	0·71	0 24	...	...	0·88	...	7	3·17	4·15	2·07	0·88	1·83	0 75	Jamalpur.			
...	...	...	...	...	0·18	2·66	...	...	...	...	4	1·53	3·66	1·74	2·66	2·84	1·19	Sheikhpura.			
...	...	...	...	...	...	...	...	0 20	3·36	...	4	4·13	5 11	2·49	3·36	3·56	0·98	Chakai Bamda			
...	...	...	...	...	0·99	1·04	...	...	2·83	...	6	3·43	6·44	2·21	2·83	4·86	1·33	Chupraon.			
...	...	...	...	...	...	..	...	...	1·75	...	3	2·50	2 90	1·85	1·75	1·75	1 08	Gidhour.			
...	...	...	...	...	...	...	...	0·93	...	...	4	2·50	1·81	1·49	0·93	0·93	0·69	Kharagpur.			
...	...	...	...	...	2·10	1·00	0·30	0·40	2·15	...	9	4·97	8·33	3·81	2·15	5·95	2·43	Madhipura ...	Bhagalpur.		
...	...	...	...	...	1·50	0·84	...	...	2·60	...	7	3·55	7 39	2·51	2·60	5·24	1·68	Bangaon (Syfabad).			
...	...	...	...	...	2·10	0·22	...	...	...	...	7	4·09	4·99	3·45	2·10	2·32	2·09	Supaul			
...	...	...	...	...	1·25	0·25	0·06	...	...	...	6	5·07	4·08	4·58	1·63	1·56	3 19	Pratapganj.			
...	...	...	...	...	0·35	0·11	...	...	0·64	...	6	4·16	4·57	2·79	1·61	1·10	1 71	Bhagalpur.			
...	...	...	...	...	...	...	...	...	0 27	...	4	3·58	2·45	2·63	1·10	0·27	1·61	Banka.			
...	...	...	...	...	0·35	0·90	...	0·09	1 80	...	6	4·40	7·36	3·74	2·30	2·74	2·57	Colgong.			
...	...	...	...	...	...	...	...	...	0·43	...	4	2·53	1·40	1·71	0·45	0·43	1·21	Bansi.			
[illegible]	..	...	...	...	1·13	..	-	...	...	0·35	7	7·66	9·10	6·06	2·50	1·91	2·90	Kishanganj ..	Purnea.		
...	...	...	...	...	1·45	...	...	...	...	...	6	6·62	7 66	5·97	2·69	2·60	3·67	Araria.			
...	...	...	...	...	0·83	1·50	0·07	...	0·45	0 00	7	5·34	5·62	4·32	1 50	3 04	2·86	Purnea.			
...	...	...	...	...	0 66	..	0·68	...	0·33	0·33	6	5·87	3·14	4·68	0·90	2·00	3·46	Gondwara (*Korah*).			
...	...	...	...	...	...	1·10	0·90	...	...	...	7	6·56	7·00	4·46	1·90	2·30	2·39	Barsoe.			
[illegible]	..	...	...	...	0·09	...	...	...	...	...	9	6·66	5·96	5·55	1·20	2·02	3 50	Forbesganj.			
...	...	...	...	...	...	...	...	...	.	...	3	7·53	6·06	6·56	3·14	3·14	4 54	Kaliaganj.			
...	...	...	...	...	0·45	0·33	1·18	..	2·75	1·33	10	5 58	11 70	3 87	2·75	6·06	2·40	Malda ...	Malda.		
...	...	...	...	...	1·45	0·57	0·10	...	3 18	1·57	9	6·00	8 93	4·60	3·18	5·87	2 95	Chanchal.			
...	0·10	...	...	...	2·20	0·30	0·05	...	7·65	1·90	10	5·53	14·00	3 83	7·65	12·10	2 76	Gajol.			
...	...	...	...	...	...	...	0·50	...	0·60	0·20	9	6 60	5·85	5 84	1·40	1·30	3·82	Sibganj.			
...	...	...	...	...	0·15	0·68	4 77	...	0·[illegible]5	1·24	11	?	18·70	?	4·77	7·79	?	*Gomastapur.*			
...	...	...	...	...	...	0·08	0·55	..	0·[illegible]8	0·89	10	?	5·44	?	0 89	1·90	?	*Nawabganj.*			
...	...	...	...	...	1·11	0·36	...	...	4·04	1·95	9	5·07	10·64	4·25	4·04	8·01	2 47	Rajmahal ...	Sonthal Parganas.		
...	...	...	...	...	...	...	...	...	0·14	0 47	5	4 79	1·06	3·39	0·60	0·81	2·26	Godda.			
...	...	...	...	...	...	...	...	...	...	1·90	7	6·48	6·35	4·00	1·90	2·14	3 03	Pakaur.			
...	...	...	...	...	0 04	...	...	...	0 08	0 73	4	5·21	4 37	3 50	1·57	0·91	2 16	Nayadumka.			
...	...	...	...	...	...	...	...	...	2·37	0·14	4	4·42	3·23	2 85	2 37	2·51	1·65	Deoghur.			
...	...	...	...	...	...	...	...	0·85	...	...	4	5·27	2·44	3·31	0·85	0·85	2·00	Jamtara			
...	...	...	...	...	0·50	...	...	...	...	0·23	4	?	4·03	?	2·18	0·73	?	*Mohagama.*			
...	...	...	...	...	...	...	...	...	0·65	0·18	5	2·80	1·32	2·01	0·63	0·76	1·56	Nunihat.			
...	...	...	...	...	...	..	0·40	...	0·32	0·11	10	3 67	4·58	1·98	1·38	1·49	1·19	Assanboni.			
...	...	...	...	...	...	...	...	...	..	0 23	6	4 43	2·41	2·01	0·70	0·30	0·58	Katikund.			
...	...	...	...	...	...	...	...	1·25	0·53	...	3	4 14	3·78	2·40	2 00	1·78	1 43	Madhupur.			
...	...	...	...	...	...	...	...	...	1·57	...	2	2·14	3·43	1·36	1·86	1·57	0 59	Sarwan.			
...	...	...	...	...	...	...	...	0·50	1·05	...	4	4 43	3·31	2·54	1 30	1·55	0·66	Sarath.			
...	...	...	...	...	...	...	...	0 09	..	...	2	2·60	2·65	1·82	1·86	0·09	1·02	Barkope.			
...	...	...	...	...	0 95	...	...	0 41	0·45	...	7	2 57	5·04	2 33	1·35	1·61	1·04	Bhagya.			
...	...	...	...	...	...	...	...	..	...	1·82	7	4·15	5·08	2·59	1·82	2·77	1·47	Mohespur.			
...	...	...	...	...	...	0·05	...	0·04	1·73	0·20	7	?	6·13	?	1·73	2·62	?	*Hiranpur.*			
...	...	...	...	...	0·06	...	0·21	...	0·22	1·36	10	5 30	6·19	3·07	1·36	2·61	1·78	Barharwa.			
...	...	...	...	...	0·84	0·50	0 97	0·55	1·58	1·12	9	4·57	8·86	3·08	1·63	5·66	1·25	Sahibganj.			
...	...	...	...	...	0·80	0·12	0·31	0·03	0·27	1·06	8	?	5 07	?	1·12	2·65	?	*Bario.*			

Table of Rainfall recorded at stations

Meteorological Division.	Division.	District.	Station.	1	2	3	4	5	6	7	8	9	10	11	12	13	14	15	16	17	18	19	20
ORISSA	Orissa.	Cuttack ...	Jagatsingpur	...	...	...	...	..	...	...	...	...	1·25	1·06	...	2·08	...	0·27	...	...	...	..	...
			Hanki ..	...	...	...	..	...	...	0·39	...	...	1 10	0·15	0·86		...	...	...	...	0·48	...	...
			Cuttack ...	...	...	...	...	...	...	0·84	...	...	0·55	0·23	2·43	0·46	...	...	...	...	0·22	...	...
			False Point ...	...	...	...	...	...	...		...	...	1·10	0·43	0·41	0·31	...	0·05	...	...	...	...	...
			Kendrapara	...	...	..	...	...	...	0·07	...	...	1·68	1·31	0·15	0·35	...	...	..		...	...	...
			Jajpur .	...	...	0·04	0·02	...	...	0·17	...	...	1·63	1·15	0·14	0·44	...	...	0·04	1·24	...	...	...
			Dharmsala ...	...	...	0·25	...	...	...	0·39	...	...	2·32	0·42	...	1·35	...	...	0·93	...	...	...	...
			Salepur ...	...	...	..	...	...	...	1·00	...	0·62	..	0·91	1·40	...	...	...	...	...	...	...	...
		Balasore	Akhyapada ...	...	...	0·20	...	...	...	0 16	...	1·78	0·33	...	...	0·69	..	0·51	0·90	...	..	...	...
			Chandbali	...	...	.	...	...	...	...	...	. .	1·27	...	0·05	0·34	...	...	...	..	1·16	...	...
			Bhadrak	...	...	0·25	..	...	...	...	...	...	0·61	...	0·16	0·25	...	0·12	...	0·96	...	...	...
			Soro .	...	...	...	..	...	...	...	..	...	0 50	...	0·15	0·20	...	0·10	...	..	...	...	...
			Balasore ...	..	0·15	...	0 04	...	...	...	...	...	0·46	...	...	0·15	...	...	...	...	..	...	...
			Jellasore	...	1·16	0·02	0·61	...	...	0·16	...	0·08	0·05	...	0·11	...	...	...	...	...	...	...	...
			Baliapal ...	...	0·28	..	0·10	...	...	0·20	...	0 00	0·10	...	0·45	0·09	...	...	...	...	...	...	...
			Eram (Basudebpur).	...	...	...	...	...	...	...	...	...	0·60	...	...	0·62	...	...	...	...	...	...	...
			Turigaria ...																				
			Banuth ...	...	0·30	0·33		0·30	...	0·40	..	...	0·50	...	0·10	0·10	...	...	...	...	...	...	...
		Angul ...	Angul ...	...	...	...	0·50	..	...	0·08	...	...	1·90	0·62	0·27	...	0·06	...	...	...	...	...	...
			Bissipara	0·08	...	...	. .	...	...	0·35	...	.	0 51	0·64		1·13	...	...	...	0·47	...	...	...
			Chhendipada	...	...	...	...	...	...	1·05	...	...	1·02	0·50	0·18	...	...	..	...	..	...	...	...
			Tikerpara	.	...	..	...	...	...	1·02	...	0·41	0·75	..	...	..		..		—	...	...	...
			Balandapara	0·20	0·12	...	...	...	..	...	...	...	0·25	0·95	0·05	0·11	0·04	0·03	0·71	...	...	...	...
		Orissa Tributary Mahals.	Baramba .	...	...	..	...	...	...	...	...	1·00	0·16	0·91	...	0·12	0·42	...	...	1·00	...	...	...
			Kunjabongai	...	...	0·26	...	...	...	...	...	...	0·88	0·92	...	0·08	...	0·21	...	0·07	0·61	...	...
			Dhenkanal ...	.:.	...	..	.	..	...	0·83	...	...	0·33		2·78	0·03	...	...	...	..	0·76	...	...
			Baisinga ...		...	...		0·06	...	0 33	...	...	0·54	0·85	1·55	0·42	...	...	...	...	0·50	...	...
			Keonjhar ...	...	...	...	0·44	0·80	...	..	...	1·03	0·32	0·44	0·48		...	...	...	...	...	...	...
			Anandapur ...	...	...	...	0·14	0·78	...	1·60	..	...	0 25	...	0·30	1·10	...	...	...	0 01	...	...	...
			Haripada ..	..	0·50	...	0·37	0·23	...	0·23	..	0·08	0·44	..	0·72	0·04	...	...	..	..	..	...	...
			Karanjia ...	...	..	1·26	0·28	0·04	0 03	0·16	...		0·26	0·50	0·30	1·10	...	...	...	0·13	...	...	...
			Narsingpur ...	...	...	...	...	...	0·15	...	...	0·76	0·75	...	0·02	...	0·11	...	..	0·19	...	...	...
			Nayagarh ...																				
			Pal Lahera ...	...	0·08	...	...	0·24	—	0·31	...	...	0·86	0·78	1·39	0·63	...	0·70	...	0·12	...	...	...
			Ranpur ...	...	...	...	...	...	...	...	...	...	...	0 69	...	...	...	0·15	...	0 30	...	...	...
			Talcher ...	...	...	...	...	...	0·06	0·43	...	...	0·67	0·24	2·02	...	...	...	...	0·75	...	...	...
			Athmalik ..	..	...	...	...	...	...	...	...		1·00	0·63	...	0·54	...	...	...	...	...	...	...
			Hindol ...	...	...	...	...	...	0·21	...	...	1·13	0·26	0·14	0·06	...	0·13	...	...	...	...	...	...
			Boud ...	...	...	...	...	...	...	...	...	...	1·18	...	1·14	...	...	...	...	...	...	...	...
		Puri ...	Puri	...	...		...	...	...	...	...	...	0·35	0·65	0·50	0·30	...	...	...	...	...	...	...
			Khurda	...	...	...	...	...	...	0·25	...	1·50	0·25	...	...	0·6	1·00	...	...	...	...	...	...
			Bhanpur ..	...	...	...	...			...	...	...	0·10	0·14	...	0·18		0·36	...	...	0·10	...	...
			Gop ...	...	...	...	...	...	0·37	...	—	0·45	2·06	1·90	0·02	...	0·06	...	...	...	...	...	...
			Satpara ...	...	...	...	...	...	...	...	...	...	0·40	0·56	...	0·02	.	...	...	...	...	...	...
			Pipli	...	...	...	...	...	...	2·35	...	...	0·00	0·98	2·47	...	0·14	0·60	...	...	...	...	...
			Kanas ...	..	...	..	...	...	0·05	...	...	1·30	1·75	. .	0·10	...	0 07	...	...	...	...	...	...
CHOTA NAGPUR.	Chota Nagpur.	Hazaribagh...	Pachamba (Giridih).	...	...	0·08	...	0·01	...	...	...	...	0·05	...	0·79	...	...	...	...	0·04	...	...	...
			Hazaribagh .	...	...	...	0·39	...	...	...	0·06	...	...	...	0·36	...	...	...	...	...	...	...	...
			Barhi	...	...	...	...	..:	...	...	...	...	...	0·22	...	...	...	...	...	...	...	...	...
			Chatra	...	...	...	..	. .	...	...	0·03	...	...	.	1·30	...	...	...	...	...	...	...	...
			Kharagdiha	...	..	...	..	..	...	...	...	...	...	0 67	..	...	...	...	...	...	...	...	...
			Ramgarh	...	...	...	0·30	...	...	1·10	0·40	...	...	...	0·60	...	...	...	...	...	...	...	...
			Koderma	...	...	...	...	..	...	...	...	...	...	..	0·40	...	...	...	...	...	...	...	...
			Bagodar ..	..	...	0·25	...	...	...	...	...	...	.	0·97	...	...	...	...	...	...	...	...	...
		Ranchi	Lohardaga	...	..	...	...	...	...	...	...	...	...	0·25	0·54	0·10	...	0·20	...	...	...	...	...
			Ranchi	...	...	...	0·07	0·32	...	0·30	1·50	0·38	..	...	0·70	...	...	...	...	...	...	...	...
			Silli	...	..	...		...		0·53	...	...	...	.	0 35	...	...	...	...	...	...	...	...
			Palkot	...	...	.	...	..	0 30	...	...	...	..	0·60	0 34	...	...	...	...	...	...	...	...
			Bano ...	...	.	..		.			...	...		0·50	0·30	...	...	...	...	0·50	...	...	...
			Tamar .	...	0·50	0·29	0·25	0·14	0·19	1·04	...	0·52	0·65	0·42	...	...	...	...	...	.	...	...	...
			Kurdeg	.		...	0·28	..	...	...	...	0·45	0·55	...	0·38	...	...	...	...	0·58	...	...	...
			Gamla ...	...	0 04	...	...	...	..	0·16	...	...	...	0·33	0·23	...	...	..	...	0·41	...	...	...
			Chainpur .	...	0·10	...	...		...	0·12	...	...	...	1·43	0 40	...	...	0·03	...	—	...	...	...
		Chota Nagpur Tributary States.	Sirguja ...	...	...	...	...	...	0·13	0·04	0·02	...	...	...	2·03	...	...	...	...	...	...	...	...
			Jashpur .	...	...	..	...	...	0·60	...	...	0·28	..	...	0·26	...	.	...	1·41	...	...	...	...
			Gangpur	...	...	...	...	...	...	. .	...	...	0·68	...	...	.	0·18	...	0 13	...	...	...	...
		Palamau ..	Palamau (*Daltonganj*).	...	...	...	...	...	...	0·06	0·10	...	...	...	...	...	...	...	...	...	...	...	...
			Balumath																				
			Husainabad	..	...	...	...	...	...	...	...	...	...	...	0·34	...	...	...	...	...	...	...	...
			Garhwa .	...	...	...	...	...	...	...	...	0·11	..	...	...	...	...	...	...	...	...	...	...
			Mahuadanr ...	...	..	...	...	...	...	...	...	...	...	0·29	1·71	0·85	...	...	...	...	...	...	...
			Panki .	...	...	...	...	...	...	...	...	...	...	1·08	...	. .	...	...	...	...	...	...	...
			Latehar ...	...	...	...	...	...	...	0·19	...	...	...	0·64	1·45	. .	...	...	...	...	...	...	...
			Nagaruntari ..	...	...	...		...	...	...	...	...	...	...	...	...	...	...	...	...	...	...	...
			Ranka ...	...	.	...	...	...	...	0·15	...	0·13	0·24	..	0·35	...	...	...	...	...	...	...	...
			Chattarpur ..	...	...	...	...	...	...	...	...	...	...	0·56	0 27	...	...	...	...	...	...	...	...
			Bhaonathpur	...	...	...	...	...	...	...	...	...	...	..	.	...	...	...	...	...	...	...	...
			Patan ...	...	...	...	...	...	...	...	...	...	...	0·54	.	...	...	...	...	...	...	...	...
			Monatu ..	...	...	...	...	...	...	...	...	...	...	...	0·70	...	...	...	...	...	...	...	...
			Leslieganj	...	...	...	...	...	...	. .	0 16	...	...	...	...	0 25	...	...	...	...	...	...	...
			Kerh ...	...	...	...	...	...	...	...	0·25	...	...	...	0·87	..	...	...	...	...	...	...	...
			Garu ...	...	...	...	...	..	...	...	...	...	...	...	1·25	0·10	...	...	...	0·40	...	...	...
		Manbhum ...	Purulia	...	...	...	0·26	..	...	...	...	0·02	...	...	1·40	...	...	...	...	0·03	...	...	...
			Gobindpur	...	...	0 23	...	...	...	...	...	0·42	...	..	2·23	—	...	...	...	0·11	...	...	...
			Raghunathpur	.	...	0·17	—	...	...		...	0·19	...	...	3 32	...	...	...	...	—	...	...	...
			Barabhum	...	...		0·11	...	...	0·40	...	0·70	1·30	...	0·80	...	...	...	...	...	...	...	...
			Jhalda	...	...	1·30	.	...	...	.	..	...	0·11	.	0·50	...	...	...	..	...	...	...	...
			Chas	.'			...	...	...	0·10	...	...	...	.					...	.	...	...	...
			Pandra	...	0·26	0·42	..	...	...		...	...	. .		0·60	...	...	...	...	0·02	...	...	...
			Manbazar ...	...	..	1·27	...	..	...	0·12	..	0·49	...	0·61		..	..	...	...	...	...	...	...
		Singhbhum .	Chaibassa	...	...	...	0·29	0·01	...	0·26	0·03		0·08	0·13	1·76	..	...	...	...	...	0·12	...	...
			Chakradharpur	...		...	.	..	0·35	0·02	0·13	0·12	0·10	0·72		.	...	...	...	0·04	—	...	...
			Ghatsila	...	0·11	...	0·46	0·87	..	.	...	1 76	...	.	0 05	0·04	...	...	..	...	..	...	...
			Baharagora ...	...	0·40	.	0·88	0·22	...	0·22	0·15	...	0 05	. .	2·02	0·04	...	...	...	...	...	...	...
			Galikura ...	...	...	...	0·01		...	0·50	...	...	0·39	0·30	0 02	0·06		...	...	...	...	...	...
			Kalikapur ...	...	.:.	...	1·47	1·10	...	1·97	0·10	0· 7	...	...	1·20	...	...	...	...	...	...	...	...
			Monoharpur ...	...	...	...	...	0·15	...	0·57	...	...		...	1·17	...	...	...	...	0·37	...	...	...
			Kotbari ...	...	...	...	1·50		...	...	...	...	0·70	...	0·26	...	. .	...	...	...	...	...	...
			Seraikella ...	...	0·06	0·08	0·27	0 04	...	0·22	...	0·05	0 90	0·01	1 50	...	...	...	...	...	...	...	...
			Kharsawan ...	..	..	0·15	0·10	...	..	0 30	...	0·18	0·65	...	0·04	...	...	...	...	...	...	...	...
			Jaintgarh ...	0·40	..	...	...	...	..	0 54	...	...	1·07	..	0·35	1·48	...	...	...	...	...	...	...
			Jaganathpur	0·70	0·03	...	...	...	...	...	0 35	...	1·21	0·15	0·55	1·12	...	...	...	...	...	...	...

Bengal in May 1905—*concluded.*

21	22	23	24	25	26	27	28	29	30	31	Number of rainy days.	Average number of rainy days.	Total rainfall for the month	Average rainfall for the month	Heaviest rainfall during the month.	Total rainfall from 16th to 31st May 1905	Average rainfall from 16th to 31st May.	Station	District.	Division.	Meteorological Division.
...	...	...	...	...	...	...	...	...	...	0 45	5	4 43	5 71	3 77	2 68	0 45	2 24	Jagatsingpur	Cuttack.	Orissa.	Orissa
...	...	...	...	...	...	0 90	...	...	1'07	...	7	4 28	4'04	2 79	1 10	2'45	1 83	Hanki			
...	...	...	...	...	...	...	...	...	0'73	...	7	5'23	5 40	3 54	2 48	0 95	2 89	Cuttack			
...	...	...	...	...	...	...	...	...	...	...	4	4 32	2 30	4 46	1 10	Nil	3 14	False Point.			
...	...	...	...	...	...	...	...	...	...	...	4	5 33	3 58	4 50	1 68	Nil	3 02	Kendrapara			
...	...	...	...	...	...	...	...	...	...	0 33	7	7'20	5'20	5 26	1 63	1 61	3 46	Jajpur			
...	...	...	...	...	...	...	...	...	0'28	...	7	5 73	5'97	5 14	2 22	1 21	4 04	Dharmsala			
...	...	...	...	...	...	...	...	...	0 39	...	5	4 50	4'39	4 32	1 46	0 39	3 14	Salepur			
...	...	...	...	...	...	0 03	...	...	...	...	7	5 88	4 61	4 85	1 78	0 93	3'45	Akhyapada	Balasore.		
...	...	...	...	...	...	...	...	...	...	...	8	6 29	3 82	5 21	1 27	1 16	3 01	Chandbali.			
...	...	...	...	...	...	...	...	...	0'25	...	7	7 50	2'60	5'50	0'96	1 21	3 57	Bhadrak			
...	...	...	...	...	...	...	...	...	...	...	4	7'18	0 95	5 40	0 50	Nil	3 52	Soro			
...	...	...	...	...	...	0'80	...	0'18	...	0 70	6	7 74	2 45	5'14	0 80	1 68	3 19	Balasore			
...	...	...	...	...	...	0 46	...	0 17	...	...	6	6 11	2 82	4 27	1 16	0 63	2'64	Jellasore			
...	...	...	...	...	...	0 10	...	0'05	...	...	6	?	1 37	?	0 45	0 15	?	*Baliapal*			
...	...	...	...	...	...	...	...	...	...	...	2	?	1'22	?	0 62	Nil	?	*Bram (Basudebpur).*			
																		Turigaria.			
...	...	...	...	...	...	...	...	...	...	...	7	?	2 08	?	0 50	Nil	?	*Basuth*			
...	...	...	...	...	...	0 93	...	...	0 46	0'05	7	4'40	5 46	2'75	1 90	1 43	1 78	Angul	Angul.		
...	...	...	...	...	...	...	0'90	...	0 42	1'05	8	3 95	5 53	2'08	1 12	2 84	1 13	Bissipara.			
...	...	...	...	...	...	0 46	...	0'02	...	...	5	?	4 12	?	1 92	0 47	?	*Ukhendipada.*			
...	...	...	...	...	...	...	...	0'61	1'31	0 72	6	?	4 72	?	1 21	2 54	?	*Tikerpara.*			
...	...	...	...	...	...	...	0 03	...	0 06	0'09	7	?	3'24	?	0 95	1 49	?	*Balandapara.*			
...	...	...	...	...	...	1 08	...	0'80	...	0 09	8	5'50	4'68	3 04	1 08	2'97	1 77	Baramba ...	Orissa Tributary Mahals.		
...	...	...	...	...	0 36	...	...	...	0 40	0 94	8	4 84	4 74	3 16	0'92	2 30	1 58	Kunjabongarh			
...	...	...	...	...	...	0 09	...	...	0 32	...	5	4'55	5 07	3 09	2'73	1 17	1 96	Dhenkanal			
...	...	...	...	...	...	0 04	...	...	0'23	...	7	?	4 40	?	1'55	0 77	?	*Baisinga.*			
...	...	...	...	...	...	...	...	0 30	...	0 50	8	5 11	4 31	2'13	1 43	0 80	1 21	Keonjhar			
...	...	0'14	...	...	...	...	0 71	...	...	...	8	6 13	5 06	4'15	1 60	0 89	2'25	Anandapur.			
...	...	...	...	...	...	...	...	0 15	0 88	0'38	9	6 95	4'23	4 84	0 58	1 41	2 45	Haripada.			
...	...	...	...	...	...	0'22	...	...	1'28	...	9	?	6 09	?	1'28	1 53	?	*Karanjia*			
...	...	...	...	0'17	...	...	...	1'11	1 15	0 50	9	4'14	4 93	1 92	1 13	3 10	1 14	Narsingpur.			
												4 57		2 06			1 15	Nayagarh			
...	...	...	...	...	...	...	0 57	...	0 05	...	8	4'75	5 07	2 99	1'29	0 74	0 87	Pal Lahera.			
...	...	...	...	...	...	...	...	...	0'58	...	4	3 86	1'72	2'27	0 69	0 88	0 91	Ranpur.			
...	...	...	...	...	...	1'43	...	...	0'70	...	7	3'80	6 34	2 69	2 02	2 88	1 62	Talcher.			
...	...	...	...	...	...	...	...	0 65	...	0 60	5	?	3 45	?	1'00	1 25	?	*Athmalik.*			
...	...	...	...	...	...	0 90	...	0'61	...	0 08	7	?	3 72	?	1 13	1 79	?	*Hindol.*			
...	...	...	...	...	...	...	...	...	0 13	...	3	?	2 45	?	1'18	0 13	?	*Boad.*			
...	...	...	...	...	...	...	...	...	0'10	...	5	3 30	1 90	2 89	0 65	0 10	1 99	Puri	Puri.		
...	...	...	...	...	...	1'21	...	2'12	...	0 04	7	4 63	6 97	3 40	2'12	3 37	2'08	Khurda			
...	...	...	...	...	...	...	...	...	1 44	...	6	3 41	2 32	2 17	1 44	1 54	1 00	Bhanpur.			
...	...	...	...	...	0 04	...	...	0'08	0 43	0 02	5	3'47	5 38	4'06	2 06	0'52	3 07	Gop.			
...	...	...	...	...	...	...	...	?	0 70	...	3	2 82	1 96	2 91	0 86	0'70	1 66	Satpara			
...	...	...	...	...	...	0 15	...	...	0 22	...	5	3 93	7 51	3 33	2'47	0 37	2 40	Pipli.			
...	...	...	...	...	0 35	...	...	2 40	0 15	0 05	6	?	6 20	?	2 40	2 95	?	*Kanas.*			
...	...	...	...	...	...	...	...	0 90	0 16	...	3	'53	1 98	2 44	0'90	1 10	1 54	Pachamba .. (*Giridih*)	Hazaribagh	Chota Nagpur.	Chota Nagpur
...	...	...	...	...	...	...	...	...	...	...	2	3 08	0 66	1 77	0'39	Nil	1'29	Hazaribagh			
...	...	...	...	...	...	...	...	...	...	...	1	2 40	0'22	1 52	0 22	Nil	1 16	Barhi.			
...	...	...	...	...	...	...	...	...	...	...	1	2 93	1'33	1 68	1'30	Nil	1 10	Chatra.			
...	...	...	...	...	...	...	...	0'25	...	...	2	3 73	0 92	2 28	0 67	0 25	1'39	Kharagdiha.			
...	...	...	...	...	...	...	0 02	...	...	...	4	2 53	2 32	1 64	1 10	0 02	1 12	Ramgarh			
...	...	...	...	...	...	...	...	...	...	...	1	?	0 40	?	0 40	Nil	?	*Koderma.*			
...	...	...	...	0 09	...	...	...	0 73	...	...	3	?	2 04	?	0 97	0 82	?	*Bagodar.*			
...	...	...	...	...	...	...	...	...	...	...	4	3 35	1 09	1'73	0 54	Nil	1 07	Lohardaga ...	Ranchi.		
...	...	...	...	...	...	0 14	...	...	...	...	6	4 68	3 59	2'24	1 79	0 14	1 61	Ranchi			
...	...	...	...	...	...	...	...	...	0'99	...	3	3 77	1'87	2 40	0 90	0'99	1'31	Silli.			
...	...	...	...	...	...	0 16	...	...	...	...	4	3 00	1 40	1 43	0 60	0'16	0'72	Palkot.			
...	...	...	...	...	...	0 34	...	0 17	...	...	5	?	1 81	?	0'50	1'01	?	*Bano.*			
...	...	...	...	...	...	...	...	...	...	...	9	2 57	4 00	1 54	1 04	Nil	0 87	Tamar.			
...	...	...	...	...	...	...	...	...	...	...	5	?	2 21	?	0 55	0 55	?	*Kurdeg.*			
...	...	...	...	...	...	...	0 08	...	...	...	4	?	1 26	?	0 41	0'46	?	*Gumla.*			
...	...	...	...	...	...	...	0 14	...	...	...	5	2 00	2'22	0 92	1 48	0 14	0 26	Chainpur			
...	...	...	...	...	...	...	...	...	0 30	...	3	1 21	2 42	0 67	2 03	0'30	0 52	Sirguja	Chota Nagpur Tributary States		
...	...	...	...	...	...	...	...	0 18	...	...	6	3 37	3 67	1 57	1 41	1'59	0 98	Jashpur.			
...	...	...	...	...	0'22	...	0 01	0 04	0 16	...	5	2'22	1 44	1'33	0'88	0 56	0 92	Gangpur			
...	...	...	...	...	...	...	...	...	0'04	...	1	2 07	0'20	1 04	0 10	0'04	0'81	Palamau (*Daltonganj*)	Palamau		
												1 93		1 02			0 83	Balumath.			
...	...	...	...	...	...	...	...	...	...	...	1	1'20	0'34	0 88	0'34	Nil	0 64	Husainabad			
...	...	...	...	...	...	...	...	...	...	...	1	1 47	0'11	0'81	0 11	Nil	0 75	Garbwa.			
...	...	...	...	...	...	...	...	...	...	...	3	?	2 55	?	1'71	Nil	?	*Mahuadanr*			
...	...	...	...	...	...	...	...	...	...	...	1	?	1'08	?	1'08	Nil	?	*Panki.*			
...	...	...	...	...	...	...	...	...	...	...	3	?	2 11	?	1'45	Nil	?	*Latehar.*			
...	...	...	...	...	...	...	...	...	...	...	Nil	?	Nil	?	Nil	Nil	?	*Nagarutari*			
...	...	...	...	...	...	...	...	...	...	...	4	?	0 87	?	0 35	Nil	?	*Ranka*			
...	...	...	...	...	...	...	...	...	...	...	2	?	0 85	?	0 56	Nil	?	*Chattarpur*			
...	...	...	...	...	...	...	...	...	...	0'60	1	?	0 60	?	0 60	0 60	?	*Bhawnathpur*			
...	...	...	...	...	...	...	...	...	...	...	1	?	0 54	?	0 54	Nil	?	*Patan.*			
...	...	...	...	...	...	...	...	...	...	...	1	?	0'70	?	0 70	Nil	?	*Monatu*			
...	...	...	...	...	...	...	...	...	...	...	2	?	0 41	?	0 25	Nil	?	*Lesliganj.*			
...	...	...	...	...	...	...	...	...	...	...	2	?	1 12	?	0 87	Nil	?	*Kerh*			
...	...	...	...	...	...	...	...	...	...	...	3	?	1 75	?	1 25	0 40	?	*Garu*			
...	...	...	...	...	...	...	...	...	...	...	2	5 26	1 81	2'94	1 40	0'03	1 96	Purulia	Manbhum		
...	...	...	...	...	0 24	...	...	0 32	0'20	...	7	4 27	3 74	2'60	2'22	0'87	1 52	Gobindpur			
...	...	...	...	...	...	...	...	0'15	...	...	4	4 67	3'63	3 06	3 32	0'15	2'02	Raghunathpur			
...	...	...	...	...	...	0'25	...	...	0 20	0 03	7	4 47	3 79	2 61	1 30	0 48	1 94	Barabhum			
...	...	...	...	...	...	...	...	...	0'20	...	4	3 93	2 71	2 53	1'90	0 20	1'68	Jhalda			
...	...	...	...	...	...	...	...	...	...	...	1	4'00	0 10	2 74	0'10	Nil	1'93	Chas.			
...	...	...	...	...	0'02	...	...	0 92	1 22	...	5	4 67	3'46	3 23	1 22	2'18	1 53	Pandra.			
...	...	...	...	...	0 28	...	...	0 51	...	0 51	7	?	3 79	?	1 27	1 30	?	*Manbazar.*			
...	...	...	...	...	...	0'05	...	0'40	...	...	6	5 65	3 12	3 70	1 76	0 57	2 24	Chaibassa	Singhbhum		
...	...	...	...	...	0'40	...	...	0 24	...	0 49	8	5'92	2 90	2'87	0 72	1'26	1 99	Chakradharpur			
...	...	...	...	...	...	0 23	...	...	0 31	...	7	5'27	4'73	3 97	1'76	0 54	2 54	Ghatsila.			
...	...	...	...	...	0 07	0 11	...	0 28	0 65	...	9	6'20	4 85	4 47	2'02	1'01	2 91	Baharagura.			
...	...	...	...	...	...	0'88	...	0 03	0'06	...	4	4 48	2 06	2 96	0 68	0 77	1 71	Gaikura			
...	...	...	...	...	...	0 26	...	...	0 18	...	8	6 30	6 64	4'05	1'97	0'44	2'66	Kalikapur			
...	...	...	...	...	...	0 86	0 13	0 19	0 03	...	7	3'00	3 37	1 31	1 17	1'48	0 68	Manoharpur.			
...	...	...	...	...	...	1'55	...	0 37	...	...	5	?	4 38	?	1 55	1 92	?	*Kâlbari*			
...	...	...	...	...	...	2 12	...	...	...	...	5	?	2'35	?	2 12	2 12	?	*Seraikella.*			
...	...	...	...	...	...	0 71	...	...	...	...	7	?	2'71	?	0 71	0'71	?	*Kharsawan.*			
...	...	...	...	...	...	...	...	...	...	...	5	?	3 94	?	1 48	Nil	?	*Jaintgarh.*			
...	...	...	...	...	...	0 12	...	0 30	0 58	...	9	?	5'41	?	1'21	1'00	?	*Jaganathpur.*			

SUMMARY OF THE METEOROLOGICAL AND RAINFALL OBSERVATIONS TAKEN IN BENGAL, AND OF THE METEOROLOGICAL OBSERVATIONS TAKEN IN ASSAM, FOR THE MONTH OF MAY 1905.

THE month of May, though characterised by high pressure, low temperature and rainfall above the ordinary, was on the whole more normal than its predecessors. The distribution of pressure was virtually of the normal type, though for the greater part of the month the gradient was steeper than usual. It is to this latter feature that the high south-easterly winds which prevailed during the month were due, and these winds were in turn the cause of the unusual prevalence of thunderstorms, which not only accounted for the increased rainfall, but also for the diminished temperature. Though the type of weather here indicated maintained itself with considerable constancy during the first half and again during the latter days of the month, there was an interval between the 14th and the 25th, when the weather was of a different character. During this period owing to a change in the distribution of pressure west hot and south-west winds extended into Lower Bengal, rainfall practically ceased, and temperature rose above the normal.

At the beginning of the month pressure was in slight excess, while temperature was nearly normal. The distribution, however, commenced almost immediately to assume the character indicated above, and pressure began to rise, while the showery weather which set in from the east and north of the province gradually extended westwards, bringing with it a general reduction of temperature. Rainy weather continued almost without intermission, more particularly over Lower Bengal, up to the 14th of the month, conditions being especially unsettled on the 8th and 9th, on the latter of which dates a small depression was shown over South-West Bengal. Pressure during this period underwent only small and unimportant fluctuations and remained above the normal, while mean temperature, as has been already indicated, was low throughout the province.

On the 14th a change in the distribution set in leading to altered weather conditions during the succeeding days of the month. On the 14th a small shallow depression was shewn at the head of the Bay. It was in itself of no importance and was merely an indication of the change in pressure distribution which was taking place at the time. This change, which was accompanied by a slowly falling barometer, resulted in the gradual diffusion of westerly winds over Lower Bengal and Assam with a corresponding rise in temperature. On the 18th pressure was for the first time below the normal throughout the province, while temperature except in Orissa and West Bengal was similarly for the first time in general excess. The distribution had on the 18th showed a tendency to revert to its former type, but about the same time a new factor came into operation which helped to perpetuate the slightly abnormal weather in the province. On the 18th or 19th weather had become unsettled in the Andaman sea, and by the 20th a small cyclonic storm had formed somewhat to the north-east of Port Blair. On the evening of the 20th it crossed the Burma coast slightly to the east of Diamond Island, and moving in a northerly direction passed out again into the Bay of Bengal early on the next morning. During the succeeding 24 hours it moved parallel to the Arakan coast, and finally striking the land near Akyab on the morning of the 22nd broke up in Upper Burma. It brought no rain to Bengal, but so far affected the weather that it diverted the winds from their normal directions, giving them a light and variable character. This change in the winds was accompanied by a further rise in temperature in all but the extreme western districts, where the pressure continued falling owing to the proximity of the storm.

With the disappearance of the storm pressure rose rapidly, but it was not till the 25th that the weather fully recovered its normal character. On that date pressure was once more in excess throughout the province, and the mean temperature for the day differed but little from the normal. Throughout the whole of this period, from the 14th to the 24th, rain had held off from almost the whole province, but on the 25th showers again became fairly general and well distributed.

During the last days of the month, as had already been pointed out, weather was of the ordinary type with, however, something more than the normal rainfall.

Pressure was as we have seen in excess for the first seventeen days of the month; from the 17th to the 25th it was below the normal, while during the latter days of the month, though it fluctuated slightly, it was for the most part high. The average for the month was consequently above the normal, the excess being below $\frac{1}{10}$th of an inch except over a considerable portion of East and North Bengal, where it slightly exceeded that amount.

Temperature was consistently low during the first half of the month, and was likewise either normal or below normal from the 25th to the 31st: during the rest of the month there was slight excess. The average mean for the month is benop below normal throughout the province, the defect being less than 5° except for a small area in East Bihar, where it was slightly greater. The deficiency is more marked in day than in night temperatures, for the latter of which the average in the extreme east of the province was normal. Rainfall was altogether absent from the province during the period extending from the 14th to the 24th, but for the remainder of the month it was more plentiful than usual, especially in the eastern half. Notwithstanding, therefore, the prolonged dry period in the latter half of the month, the total is above the average for all the divisions except Orissa, in which the amount of precipitation was slightly deficient. The largest excess was in North Bengal, where it amounted to about 35 per cent.

The following table gives full data for comparison of the actual and normal rainfall of the month of May for all districts of the Province. The figures are derived from the average

and actual rainfall of the rain-reporting stations in each district. The first column gives the normal or average district rainfall as determined from the observations of past years. The second column gives the actual district rainfall as determined from the actual rainfall of the month at the reporting stations in each district. The third column expresses the ratio of the actual district rainfall of the past month to the normal rainfall as a percentage. The fourth column gives the same information as the third in a slightly different form, stating as a percentage how much the district rainfall of the month varied in excess or defect from the normal:—

Percentage Table for May 1905.

Division.	District.	Normal district rainfall for May.	Actual district rainfall for May 1905.	Percentage of actual to normal rainfall.	Percentage excess (+), defect (−).
South-West Bengal.	Burdwan ...	5·08	6 92	136	+ 36
	Birbhum ...	4·07	7·16	176	+ 76
	Bankura ...	4·36	4·28	98	− 2
	Midnapore ...	5·39	4·87	90	− 10
	Hooghly ...	5·50	7·33	133	+ 33
	Howrah ...	5·27	6·96	132	+ 32
	24-Parganas ...	5 49	8 06	147	+ 47
	Calcutta ...	5·60	10·01	179	+ 79
	Nadia ...	6·72	10·12	151	+ 51
	Murshidabad ...	5 13	8·88	173	+ 73
	Jessore ...	7·13	8·96	126	+ 26
	Khulna ...	6·45	6 17	96	− 4
North Bengal ...	Rajshahi ...	6·04	9·56	158	+ 58
	Dinajpur ...	6·21	11 86	191	+ 91
	Jalpaiguri ...	14·31	10·20	71	− 29
	Darjeeling ...	9·29	9·62	104	+ 4
	Cooch Behar ...	14 75	9·37	64	− 36
	Rangpur ...	10·22	20 52	201	+101
	Bogra ...	7·91	16 65	210	+110
	Pabna ...	7·60	12·70	167	+ 67
East Bengal ...	Dacca ...	9·61	11·64	121	+ 21
	Mymensingh ...	11·30	19·30	171	+ 71
	Faridpur ...	8·37	9·43	113	+ 13
	Backergunge ...	8·58	6·67	78	− 22
	Tippera ...	10·20	9·38	92	− 8
	Noakhali ...	10·55	9·15	87	− 13
	Chittagong ...	11·17	4·84	43	− 57
	Chittagong Hill Tracts	11·48	5·43	47	− 53
Bihar ...	Patna ...	1·75	1·60	91	− 9
	Gaya ...	1·18	0·58	49	− 51
	Shahabad ...	0·77	0·64	83	− 17
	Saran ...	1·55	2·14	138	+ 38
	Champaran ...	2·61	3·57	137	+ 37
	Muzaffarpur ...	2·29	2 90	127	+ 27
	Darbhanga ...	2·56	3·48	136	+ 36
	Monghyr ...	2·16	4·72	219	+119
	Bhagalpur ...	3·15	5·18	164	+ 64
	Purnea ..	5·41	6·38	118	+ 18
	Malda ..	4·54	10·07	222	+122
	Santhal Parganas ...	2·75	4·68	168	+ 68
Orissa ...	Cuttack ...	4 23	4·70	111	+ 11
	Balasore ...	5·06	2·71	53	− 47
	Puri ...	3·13	4·34	139	+ 39
Chota Nagpur ...	Hazaribagh ...	1 89	1·27	67	− 33
	Ranchi ...	1·69	2·36	140	+ 40
	Palamau ...	0·94	0·16	17	− 83
	Manbhum ...	2·81	2·78	99	− 1
	Singhbhum ...	3·33	3·95	119	+ 19

The following table gives the summary of the temperature and rainfall data of each of the seven meteorological divisions of the province for the month of May 1905 :—

Meteorological Divisions.	Temperature.						Rainfall—							
	Highest observed during month.	Lowest observed during month.	Average for month.			Average mean of month above or below normal mean of month.	Of month.			Rainy days			Since 16th May 1905.	
			Of highest of each day.	Of lowest of each day.	Of mean for each day.		Average.	Normal average.	Variation	Average number in month.	Normal average number in month.	Variation.	Average.	Normal average.
South-West Bengal	109·6	66·7	93·6	76·7	85·2	—2·3	7·06	5·38	+1·68	7·40	7·19	+0·21	1·98	3·09
North Bengal	101·0	62·8	87·8	73·1	80·4	—1·8	13·36	9 87	+3·49	13·33	10·03	+1·79	7·89	6 17
East Bengal	98·8	65·9	83·9	75·1	82·0	—0·7	10·27	10·24	+0·03	11·00	10·82	+0·18	6·29	6·06
Bihar	112·5	64·8	93·5	75·4	83 5	—2·4	3·83	2·41	+1·13	4 42	3·39	+1·03	1·70	1·47
Orissa	106·6	69·1	92·4	79·0	85·8	—1·5	3·75	4·15	—0·40	5·42	5·17	+0·25	1·09	2·76
Chota Nagpur*	115·1	64·9	101·1	75·5	88·4	—2·2	2·32	2·28	+0·04	4·20	3·83	+0·37	0·45	1·47
Assam	96·1	65·0	86·3	72·3	79·3	—0·2								

* Purulia not included.

Meteorological Office, Bengal,
The 20th June 1905.

G. W. Küchler,
Meteorological Reporter to the Govt. of Bengal.

GOVERNMENT OF BENGAL, IRRIGATION DEPARTMENT.

Approximate Return of Traffic on the Circular and Eastern Canals for the week ending Saturday, the 17th June 1905, as compared with the corresponding week of the previous year.

Nature of Cargo.	Week ending Saturday, the 17th June 1905.			Week ending Saturday, the 18th June 1904.		
	Number of boats.	Weight of cargo.	Tollage.	Number of boats.	Weight of cargo.	Tollage.
		Mds.	Rs.		Mds.	Rs.
Rice and paddy	275	54,699	791	383	52,495	774
Jute	5	1,175*	21	25	12,429†	112
Firewood	49	43,025	626	51	28,675	426
Other articles	573	1,81,575	2,259	764	2,36,840	2,942
Total ...	902	2,20,474	3,698	1,223	3,30,439	4,254

* Weight by canal measurement = 1,225 maunds.
† Ditto ditto = 13,100 ,,

Results of the Meteorological Observations taken at the Alipore Observatory from 11th to 17th June 1905.

Month.	Date.	Maximum in sun.	Number of hours of bright sunshine.	Mean pressure barometer at 32° Fahr.	Temperature. Mean.	Maximum.	Range.	Minimum.	Hygrometry. Mean wet bulb.	Vapour tension.	Dew point.	Humidity.	Wind. Prevailing direction.	Miles recorded.	Rain.	Weather.
1905.				Inches.						Inch.		%			Inches.	
June	11th	151·7	8·8	29·531	93·5	104·1	20·7	83·4	79·3	0·830	73·6	55	SSW and SSE ...	112	Nil	Chiefly clear.
,,	12th	148·3	9·0	·518	91·7	100·9	17·8	83·1	83·2	1·029	80·1	69	S and SSE ...	155	,,	Chiefly clear.
,,	13th	146·5	5·0	·526	90·7	98·0	14·1	83·9	83·5	1·066	81·2	76	SSE and S ...	188	,,	Chiefly cloudy.
,,	14th	150·0	3·2	·500	91·2	97·9	12·9	85·0	84·4	1·097	82·1	76	SSE, S & variable	172	,,	Chiefly cloudy, d, t to <, /.
,,	15th	131·7	Nil	·425	86·3	96·0	18·9	77·1	81·1	1·004	73·9	78	SSE and ESE ...	95	0·05	Cloudy, o.
,,	16th	153·9	3·3	·394	95·7	106·1	20·2	85·9	82·7	0·958	77·9	61	SE by W, WNW and SSW.	110	Nil.	Chiefly cloudy.
,,	17th	145·7	0·5	·428	92·9	100·1	13·9	86·2	82·7	·988	78·9	65	S and variable ...	97	,,	Chiefly cloudy, o, d, t, <, /.

	Inches.
The mean pressure of the seven days	29·475
The average pressure of the corresponding period for 24 years, Surveyor-General's Office	29·541
	Hours.
The total number of hours of bright sunshine	29·8
The maximum possible number of hours of sunshine	94·2
	°
The mean temperature of the seven days	91·7
The average temperature of the corresponding period for 24 years, Surveyor-General's Office	84·7
The extreme variation of temperature	29·0
The maximum temperature	106·1
	Miles.
The highest velocity of the wind in one hour	18
	%
The mean relative humidity	69
The average relative humidity of the corresponding period for 24 years, Surveyor-General's Office	82
	Inches.
The total fall of rain from 11th to 17th June 1905	0·05
The average fall of the corresponding period for 24 years, Surveyor-General's Office	3·23
The total fall from 1st January to 17th June 1905	21·20
The average fall of the corresponding period for 24 years, Surveyor-General's Office	15·90

The mean pressure, temperature, etc., are deduced from eye observations.

The maximum and minimum temperatures are obtained from self-registering thermometers. All the hermometers are verified and the readings have been corrected to a standard constructed and verified at the Kew Observatory. They are exposed under a thatched shed open at the sides, and are suspended four feet above the ground.

The barometer readings are corrected to those of the standard, Newman's No. 86, formerly at the Surveyor-General's Office.

The hygrometric elements are obtained from Tables III, IV and V of the official tables compated in the Meteorological Office, and based on Regnault's modifications of August's formula.

The directions and the movement of the wind are taken from the trace of a Beckley's anemograph.

The mouth of the rain-gauge is one foot above the ground. Rainfall reported on any day is for 24 hours preceding 8 A.M. of that day.

o, overcast; d, drizzling rain; t, thunder; <, lightning; /, strong wind.

METEOROLOGICAL OFFICE, GOVT. OF INDIA,
Alipore (Calcutta), the 19th June 1905.

G. W. KÜCHLER,
for *Meteorological Reporter to the Govt of India and Director-General of Indian Observatories.*

Weekly Return of Traffic Receipts on Indian Railways.

EAST INDIAN RAILWAY.

Approximate Return of Traffic for week ended 3rd June 1905 on 1,962·25 miles open.

	Coaching Traffic.		Merchandise and Mineral Traffic.		Other earnings (estimated).	Total earnings.	Traffic Train-miles run.		
	No. of passengers.	Coaching Receipts.	Weight carried.	Receipts.			Coaching.	Merchandise.	Total.
		Rs. A. P.	Mds. s.	Rs. A. P. (a)	Rs. A. P.	Rs. A. P.			
Total traffic for the week	452,406	3,97,806 0 0	63,85,355 0	10,09,583 0 0	29,725 0 0	15,17,114 0 0	117,909	187,765	305,674
Or per mile of railway	.....	202 11 8	.....	500 5 11	15 2 4	773 3 11	.....	.....	.....
For previous 21 weeks of half-year	8,771,113*	*85,29,143 0 0	13,68,76,009 0†	2,27,85,170 0 0†	6,60,806 0 0‡	3,19,75,124 0 0	2,457,630§	3,763,502§	6,221,132
Total for 22 weeks ...	9,223,519	89,26,954 0 0	14,32,63,454 0	2,38,94,753 0 0	6,90,531 0 0	3,35,02,238 0 0	2,575,539	3,951,267	6,527,106
COMPARISON.									
Total for corresponding week of previous year.	448,063	4,22,926 9 2	61,15,607 10	11,56,904 2 6	32,049 7 11	16,11,880 3 7	113,015	219,482	332,047
Per mile of railway corresponding week of previous year.	.....	218 10 0	.....	598 0 8	16 9 1	833 3 9	.....	.....	.....
Total for corresponding 22½ weeks of previous year.	9,519,733	91,91,696 6 10	14,55,93,134 0	2,38,00,874 9 11	7,09,575 5 7	3,37,02,446 6 4	2,537,694	4,304,809	6,832,503

(a) The decrease is in grain and seed traffic.
* Added No. of passengers 7,399 and deducted Rs. 14,948 } On account of difference between the approximate and audited figures for the week ended
† Do Mds. 2,53,316 and „ 42,416 } 22nd April 1905.
‡ Deducted „ 2,807
§ Audited figures up to 22nd April 1905.

1905. *Abstract of progressive weekly returns of all earnings for 1905 in comparison with 1904.*

Open mileage.	Period.	Coaching Traffic.		Merchandise and Mineral Traffic.		Other earnings.	Total.	Per mile of Railway.	Train mileage.	
		No. of passengers.	Rs.	Mds.	Rs.	Rs.	Rs.	Rs.	No.	Rate. Rs. A. P.
*1,932·87	Week ended 7th Jan. ..	373,578	3,90,660	66,67,706	11,43,298	30,547	15,64,495	809	297,842	5 4 1
*1,932·87	„ „ 14th „ ...	396,514	4,00,134	61,44,640	11,04,801	30,474	15,35,869	830	297,865	5 2 5
*1,932·87	„ „ 21st „ ...	384,101	4,27,893	60,60,542	11,00,526	34,487	16,48,906	851	299,187	5 6 4
*1,932·87	„ „ 28th „ ...	367,668	3,76,282	71,66,889	11,58,573	32,237	15,67,192	811	302,017	5 3 0
*1,932·87	„ „ 4th Feb. ...	397,461	3,96,622	64,99,831	10,85,094	32,039	15,13,755	769	296,579	5 1 9
*1,932·87	„ „ 11th „ ...	416,257	4,32,252	57,34,008	9,76,833	33,939	14,43,013	746	241,542	5 1 11
*1,932·87	„ „ 18th „ ...	401,777	3,98,209	66,87,714	10,17,406	31,113	14,34,728	742	286,891	5 0 0
*1,932·87	„ „ 25th „ ...	433,547	4,37,133	75,81,370	11,32,050	36,763	16,31,946	839	294,920	5 8 0
*1,932·87	„ „ 4th Mar. ...	494,334	4,99,897	67,71,735	*10,55,843	33,426	15,49,006	795	283,441	5 7 6
*1,946·26	„ „ 11th „ ...	480,289	4,71,986	60,00,797	10,04,143	32,597	15,09,726	769	293,617	5 2 3
*1,962·25	„ „ 18th „ ...	467,657	4,41,117	67,26,120	11,78,578	30,761	16,45,456	830	292,157	5 10 1
*1,962·25	„ „ 25th „ ...	399,793	3,90,260	64,33,077	11,04,848	31,257	15,26,365	778	301,334	5 1 1
*1,962·25	„ „ 1st April ...	409,494	4,13,071	67,83,703	10,98,392	29,755	15,43,718	787	303,951	5 1 6
*1,962·25	„ „ 8th „ ...	393,234	4,13,805	61,53,149*	9,89,985	30,314	14,04,104	716	297,383	4 11 7
*1,962·25	„ „ 15th „ ...	428,107	3,84,593	57,61,034	9,28,330	29,780	13,43,703	684	291,439	4 9 9
*1,962·25	„ „ 22nd „ ...	424,754	3,89,549	65,34,388	10,13,816	29,839	14,31,754	730	286,308	5 0 0
1,962·25	„ „ 29th „ ...	394,091	3,74,259	67,87,063	11,32,713	32,090	15,89,142	784	288,568	5 5 4
1,962·25	„ „ 6th May ...	403,716	3,99,243	62,09,593	11,01,157	31,896	15,05,215	767	303,790	4 15 3
1,962·25	„ „ 13th „ ...	418,436	3,83,435	62,35,461	10,62,028	30,903	14,76,366	752	298,015	4 15 5
1,962·25	„ „ 20th „ ...	4.9,503	3,88,006	64,50,000	11,27,128	30,003	15,46,030	788	302,049	5 1 9
1,962·25	„ „ 27th „ ...	435,268	3,89,103	65,02,302	11,56,189	30,183	15,75,444	803	303,305	5 3 1
1,962·25	„ „ 3rd June ...	452,406	3,97,806	63,85,355	10,09,583	29,725	15,37,114	778	305,674	5 15 11
	Totals up to date ...	9,223,519	89,26,954	14,32,63,454	2,38,94,753	6,90,531	3,35,02,238	781	6,527,106	5 2 1

Abstract of progressive weekly returns of all earnings for 1905 in comparison with 1904—concluded. 1904.

		No. of passengers.	Rs.	Mds.	Rs.	Rs.	Rs.	Rs.	No.	Rate. Rs. A. P.
1,934·49	First 9 days of Jan. ...	461,129	4,58,415	79,11,615	12,96,312	36,684	17,91,411	926	378,932	4 11 5
1,934·49	Week ended 16th „ ...	422,462	3,99,314	61,02,205	9,99,600	31,739	14,30,653	740	291,930	4 14 8
1,934·49	„ „ 23rd „ ...	428,165	4,40,838	55,24,628	9,73,790	29,069	14,43,726	746	292,712	4 14 10
1,934·49	„ „ 30th „ ...	409,000	4,21,040	59,70,224	10,03,302	26,379	14,50,721	750	299,668	4 13 5
1,934·49	„ „ 6th Feb. ...	436,192	4,33,903	66,63,167	10,84,782	29,329	15,48,213	800	305,477	5 1 1
1,934·49	„ „ 13th „ ...	426,570	4,15,179	68,55,000	10,06,101	30,457	14,51,737	750	296,983	4 14 3
1,934·49	„ „ 20th „ ...	430,236	4,44,071	65,97,825	10,54,190	31,533	15,30,714	791	304,165	5 0 6
1,934·49	„ „ 27th „ ...	461,527	4,40,783	66,33,951	10,33,090	30,836	15,14,939	782	305,035	4 15 5
1,934·49	„ „ 6th Mar. ..	441,443	3,99,864	66,99,979	9,78,971	29,215	14,08,050	725	309,736	4 8 8
1,934·49	„ „ 13th „ ...	448,408	4,53,684	66,27,353	10,19,118	29,031	15,00,833	776	298,302	5 0 6
1,934·49	„ „ 19th „ ...	418,923	4,37,151	59,32,190	10,03,986	26,855	14,74,092	762	305,675	4 13 2
1,934·49	„ „ 26th „ ...	387,307	4,08,552	57,18,182	10,06,201	31,106	14,43,949	746	299,633	4 13 1
1,934·49	„ „ 2nd April	369,836	3,91,329	65,10,960	10,15,931	28,205	14,35,464	741	304,685	4 10 5
1,934·49	„ „ 9th „ ...	394,446	3,94,197	64,20,788	10,40,290	30,561	14,55,448	753	306,958	4 11 10
1,934·49	„ „ 16th „ ...	397,904	3,66,456	67,03,330	11,01,655	30,848	15,03,959	777	310,195	4 13 7
1,934·49	„ „ 23rd „ ...	440,151	4,13,377	63,77,960	11,48,230	35,644	15,97,251	826	303,412	5 4 3
1,934·49	„ „ 30th „ ...	489,754	4,11,579	60,88,016	11,44,984	36,290	15,92,853	823	317,471	5 0 3
1,934·49	„ „ 7th May ...	501,079	4,16,304	68,98,463	11,63,613	37,295	16,17,186	836	307,510	5 4 2
1,934·49	„ „ 14th „ ...	487,107	3,99,753	62,51,514	11,49,771	37,737	15,87,281	821	314,057	5 0 10
1,934·49	„ „ 21st „ ...	490,279	4,32,332	75,94,175	11,90,688	37,886	16,56,900	857	312,533	5 4 11
1,934·49	„ „ 28th „ ...	416,546	4,01,727	65,78,494	12,35,767	34,706	16,62,000	859	331,787	5 0 3
1,934·49	„ „ 4th June ...	448,603	4,23,926	81,15,607	11,56,904	32,050	16,11,880	833	343,047	4 13 5
	Totals up to date ...	9,519,733	91,91,696	14,55,93,134	2,38,00,875	7,09,575	3,37,02,446	782	6,832,503	4 14 4

* Audited figures.

TARKESSUR BRANCH RAILWAY.

Approximate Return of Traffic for week ended 3rd June 1905 on 22·23 miles open.

	Coaching Traffic.		Merchandise and Mineral Traffic.		Other earnings (estimated).	Total earnings.	Traffic Train-miles run.		
	No. of passengers.	Coaching receipts.	Weight carried.	Receipts.			Coaching.	Merchandise.	Total.
		Rs. A. P.	Mds. s.	Rs. A. P.	Rs. A. P.	Rs. A. P.			
Total traffic for the week ...	21,563	5,016 0 0	20,339 0	949 0 0	10 0 0	5,975 0 0	963	225	1,188
Or per mile of railway ...	.....	225 10 3	.....	42 11 1	0 7 2	268 12 6	.....	.....	.....
For previous 21 weeks of half-year	537,168*	1,35,618 0 0*	4,11,087 0†	15,769 0 0†	172 0 0‡	1,51,459 0 0	21,005§	4,747§	25,752
Total for 22 weeks ...	558,731	1,40,634 0 0	4,32,326 0	16,718 0 0	182 0 0	1,57,434 0 0	21,968	4,972	26,940
Comparison.									
Total for corresponding week of previous year.	20,431	4,999 8 0	14,970 20	556 5 0	5 15 9	5,561 12 9	963	226	1,189
Per mile of railway corresponding week of previous year.	.....	224 14 4	.....	25 0 5	0 4 4	250 3 1	.....	.....	.....
Total for corresponding 22½ weeks of previous year.	564,788	1,40,393 2 10	5,00,734 0	17,849 7 0	176 4 6	1,67,418 14 4	23,393	5,755	27,148

* Added No. of passengers 997 and Rs. 401 } On account of difference between the approximate and audited figures for the week ended 22nd
† Do. Mds. 5,010 and ,, 151 } April 1905.
‡ Deducted ,, 3 }
§ Audited figures up to 22nd April 1905.

1905. *Abstract of progressive weekly returns of all earnings for 1905 in comparison with 1904.*

Open mileage.	Period.	Coaching Traffic.		Merchandise and Mineral Traffic.		Other earnings.	Total.	Per mile of railway.	Train mileage.	
		No. of passengers.	Rs.	Mds.	Rs.	Rs.	Rs.	Rs.	No.	Rate. Rs. A. P.
*22·23	Week ended 7th Jan. ...	20,210	4,786	21,806	805	6	5,597	252	1,188	4 15 5
*22·23	,, ,, 14th ,, ...	21,868	4,931	18,783	603	4	5,537	249	1,188	4 10 7
*22·23	,, ,, 21st ,, ...	22,851	5,258	23,026	844	6	6,138	276	1,188	5 3 8
*22·23	,, ,, 28th ,, ...	21,754	4,994	19,716	736	7	5,737	258	1,166	4 14 7
*22·23	,, ,, 4th Feb. ...	20,042	4,658	15,613	552	11	5,251	236	1,188	4 6 9
*22·23	,, ,, 11th ,, ...	21,217	5,152	20,771	837	11	6,000	270	1,188	5 0 10
*22·23	,, ,, 18th ,, ...	19,637	4,820	18,249	633	6	5,459	246	1,189	4 9 6
*22·23	,, ,, 25th ,, ...	26,104	6,385	30,704	1,039	6	7,430	334	1,188	6 4 1
*22·23	,, ,, 4th Mar. ...	37,973	10,642	30,530	1,208	15	11,865	534	1,342	8 13 6
*22·23	,, ,, 11th ,, ...	30,179	7,718	19,309	779	7	8,504	383	1,427	5 15 4
*22·23	,, ,, 18th ,, ...	25,841	6,029	20,130	858	7	6,924	312	1,186	5 13 5
*22·23	,, ,, 25th ,, ...	26,685	6,306	16,329	619	7	6,934	312	1,186	5 13 7
*22·23	,, ,, 1st April ...	24,302	5,901	20,505	770	8	6,679	300	1,230	5 6 10
*22·23	,, ,, 8th ,, ...	31,912	8,894	20,326	807	17	9,718	437	1,186	8 3 1
*22·23	,, ,, 15th ,, ...	32,543	15,924	14,497	600	12	16,536	744	1,928	10 3 6
*22·23	,, ,, 22nd ,, ...	24,536	6,264	23,493	881	5	7,230	325	1,144	6 5 1
22·23	,, ,, 29th ,, ...	23,566	5,574	15,568	721	7	*6,302	283	1,188	5 4 10
22·23	,, ,, 6th May ...	23,247	5,618	23,857	818	8	6,438	290	1,188	5 6 5
22·23	,, ,, 13th ,, ...	22,911	5,420	10,723	488	6	5,914	266	1,188	4 15 8
22·23	,, ,, 20th ,, ...	21,764	5,246	14,557	578	6	5,830	262	1,188	4 14 6
22·23	,, ,, 27th ,, ...	20,934	4,856	13,495	580	10	5,446	245	1,188	4 9 6
22·23	,, ,, 3rd June ...	21,563	5,016	20,339	949	10	5,975	269	1,188	5 0 6
	Totals up to date ...	558,731	1,40,634	4,32,326	16,718	182	1,57,434	322	26,940	5 13 6

Abstract of progressive weekly returns of all earnings for 1905 in comparison with 1904—concluded. 1904.

		No. of passengers.	Rs.	Mds.	Rs.	Rs.	Rs.	Rs.	No.	Rate. Rs. A. P.
22·23	First 9 days of Jan. ...	25,125	6,268	25,289	1,003	14	7,285	318	1,540	4 11 8
22·23	Week ended 16th ,, ...	19,705	4,443	17,986	583	9	5,074	228	1,188	4 4 4
22·23	,, ,, 23rd ,, ...	21,864	5,329	18,703	702	8	6,039	267	1,188	5 0 0
22·23	,, ,, 30th ,, ...	24,150	5,824	23,322	785	1	6,615	297	1,185	5 0 1
22·23	,, ,, 6th Feb. ...	28,938	7,082	25,796	794	3	7,879	354	1,188	6 10 1
22·23	,, ,, 13th ,, ...	26,680	6,151	20,372	659	6	6,816	306	1,232	5 8 6
22·23	,, ,, 20th ,, ...	39,816	10,661	23,300	722	4	11,387	513	1,496	7 9 11
22·23	,, ,, 27th ,, ...	25,592	6,146	24,750	806	10	7,052	317	1,184	5 15 6
22·23	,, ,, 5th Mar. ...	25,909	6,781	19,187	654	6	7,411	333	1,188	6 2 10
22·23	,, ,, 12th ,, ...	24,231	5,986	27,319	963	7	6,956	313	1,188	5 13 8
22·23	,, ,, 19th ,, ...	25,462	6,283	26,600	1,042	11	7,336	330	1,188	6 2 9
22·23	,, ,, 26th ,, ...	22,168	5,400	19,643	774	15	6,279	282	1,188	5 4 7
22·23	,, ,, 2nd April ...	25,894	6,336	26,084	1,078	9	7,423	334	1,144	6 7 10
22·23	,, ,, 9th ,, ...	39,679	11,751	30,244	1,138	10	12,894	580	1,232	10 7 4
22·25	,, ,, 16th ,, ...	48,939	14,551	21,514	767	16	15,124	680	1,496	10 1 9
22·25	,, ,, 23rd ,, ...	24,107	6,023	22,097	836	12	6,871	309	1,188	5 12 6
22·25	,, ,, 30th ,, ...	29,740	6,785	24,409	903	4	7,752	349	1,188	6 8 5
22·23	,, ,, 7th May ...	25,960	6,466	25,0m	833	16	7,315	329	1,188	6 2 6
22·23	,, ,, 14th ,, ...	28,177	6,091	24,296	930	5	7,026	316	1,188	5 14 8
22·23	,, ,, 21st ,, ...	20,958	5,196	16,623	641	1	5,708	259	1,188	4 13 1
22·23	,, ,, 28th ,, ...	21,198	5,141	18,008	503	3	5,647	254	1,188	4 12 1
22·23	,, ,, 4th June ...	20,431	4,999	14,970	557	6	5,562	250	1,188	4 10 10
	Totals up to date ...	564,788	1,40,393	5,00,734	17,850	176	1,67,419	288	27,148	6 3 8

* Audited figures.

DELHI-UMBALLA-KALKA RAILWAY.

Approximate Return of Traffic for week ended 3rd June 1905 on 182·36 miles open.

	Coaching Traffic.		Merchandise and Mineral Traffic.		Other earnings (estimated).	Total earnings.	Traffic Train-miles run.		
	No. of passengers.	Coaching receipts.	Weight carried.	Receipts.			Coaching.	Merchandise.	Total.
		Rs. A. P.	Mds. S.	Rs. A. P.	Rs. A. P.	Rs. A. P.			
Total traffic for the week	24,227	19,500 0 0‡	1,28,410 0	18,033 0 8	77 0 0	37,618 0 0	2,602	3,812	12,474
Or per mile of railway ...	.....	130 2 6	...	111 1 0	0 7 7	231 11 1	... ...	... ...	... ...
For previous 21 weeks of half-year	509,709*	4,30,653 0 0*	41,73,749 8†	3,34,986 0 0†	1,812 0 0‡	7,67 451 0 0	103,077§	84,606§	277,683
Total for 22 weeks ...	533,936	4,50,163 0 0	43,72,189 0	3,53,018 0 0	1,889 0 0	8,05,069 0 0	201,739	88,418	290,157
COMPARISON.									
Total for corresponding week of previous year.	24,417	22,637 7 6	60,612 20	10,416 2 0	80 12 6	33,113 6 0	2,883	3,699	13,346
For mile of railway corresponding week of previous year.	.....	139 6 10	.....	64 2 5	0 5 11	203 15 2	.....	.....	.....
Total for corresponding 22½ weeks of previous year.	570,091	4,85,780 3 10	30,16,860 30	2,86,969 10 10	1,347 13 9	7,74,106 12 5	216,897	83,281	300 918

* Added No. of passengers 736 and deducted Rs. 655 } On account of difference between the approximate and audited figures for the week ended 22nd
† Do. Mds. 58,794 " " 4,180 } April 1905.
‡ Deducted " 16
§ Audited figures up to 22nd April 1905.

1905. *Abstract of progressive weekly returns of all earnings for 1905 in comparison with 1904.*

Open mileage.	Period.	Coaching Traffic.		Merchandise and Mineral Traffic.		Other earnings.	Total.	Per mile of railway.	Train mileage.	
		No. of passengers.	Rs.	Mds.	Rs.	Rs.	Rs.	Rs.	No.	Rate. Rs. A. P.
*182·36	Week ended 7th Jan. ...	21,203	18,631	2,37,419	11,933	81	30,645	169	12,202	2 5 9
*182·36	" " 14th " ...	21,276	18,845	1,18,835	13,896	107	32,478	200	13,092	2 7 9
*182·36	" " 21st " ...	21,051	15,773	1,33,260	13,545	108	29,426	161	13,513	2 2 10
*182·36	" " 28th " ...	19,930	17,003	1,68,107	17,714	115	34,837	215	13,203	2 10 1
*182·36	" " 4th Feb. ...	21,482	18,986	1,07,189	11,213	79	27,278	168	13,731	2 2 3
*182·36	" " 11th " ...	21,231	17,449	2,74,372	17,541	114	35,104	216	12,820	2 11 10
*182·36	" " 18th " ...	22,534	16,262	1,87,413	16,671	119	34,052	204	13,241	2 7 11
*182·36	" " 25th " ...	26,876	20,450	2,20,289	23,124	114	43,678	263	12,716	3 5 8
*182·36	" " 4th Mar. ...	26,888	19,781	2,53,441	15,119	58	34,958	215	12,996	2 11 0
*182·36	" " 11th " ...	27,230	24,488	1,97,631	15,130	61	39,679	244	13,117	3 0 4
*182·36	" " 18th " ...	25,088	24,525	1,97,036	17,477	75	42,077	259	13,581	3 5 6
*182·36	" " 25th " ...	24,492	21,435	2,65,014	16,081	85	39,171	241	13,730	2 15 8
*182·36	" " 1st April ...	30,522	29,220	4,02,274	20,350	76	49,696	306	14,717	3 5 11
*182·36	" " 8th " ...	30,386	27, 84	1,88,204	16,254	111	44,349	273	14,137	3 9 3
*182·36	" " 15th " ...	27,606	24,225	1,83,240	18,193	89	42,506	262	14,206	2 15 9
*182·36	" " 22nd " ...	25,596	20,849	1,76,656	17,932	72	38,873	239	14,107	2 12 1
*182·36	" " 29th " ...	23,349	19,719	1,79,031	13,609	75	33,403	206	13,239	2 10 4
182·36	" " 6th May ...	23,693	19,819	1,35,376	13,674	67	33,060	204	13,286	2 9 0
182·36	" " 13th " ...	22,696	18,803	1,67,331	13,853	73	32,529	200	12,918	2 8 3
182·36	" " 20th " ...	23,674	19,665	2,02,469	17,206	73	37,034	228	13,766	2 14 5
182·36	" " 27th " ...	23,846	19,367	1,98,155	16,241	88	35,488	220	13,736	2 12 10
182·36	" " 3rd June ...	24,227	19,509	1,93,440	18,033	77	37,618	232	13,474	2 9 3
	Totals up to date ...	533,936	4,50,163	43,72,189	3,53,018	1,889	8,05,069	225	290,157	2 12 5

Abstract of progressive weekly returns of all earnings for 1905 in comparison with 1904—concluded. 1904.

		No. of passengers.	Rs.	Mds.	Rs.	Rs.	Rs.	Rs.	No.	Rate. Rs. A. P.
182·36	First 9 days of Jan. ...	24,246	22,472	1,04,228	12,553	53	35,078	216	16,544	2 1 11
182·36	Week ended 16th " ...	18,106	13,980	97,997	12,797	31	26,708	165	12,769	2 1 6
182·36	" " 23rd " ...	18,310	14,767	1,03,333	11,427	44	26,238	162	12,924	2 0 6
182·36	" " 30th " ...	20,112	18,196	2,09,460	18,841	29	37,066	210	13,086	2 9 9
182·36	" " 6th Feb. ...	20,613	15,314	1,33,164	12,565	31	27,880	173	13,038	2 5 1
182·36	" " 13th " ...	20,810	17,050	1,41,117	12,811	29	29,890	184	13,346	2 5 6
182·36	" " 20th " ...	21,888	19,050	1,40,693	12,314	64	31,428	193	12,747	2 7 4
182·36	" " 27th " ...	23,363	19,667	1,88,996	15,095	43	34,845	214	12,968	2 11 3
182·36	" " 5th Mar. ...	22,770	20,354	1,28,894	10,994	84	31,835	207	14,430	2 6 3
182·36	" " 12th " ...	23,834	23,169	96,543	10,402	51	33,622	206	14,630	2 5 3
182·36	" " 19th " ...	26,037	45,411	87,089	11,913	133	57,455	354	17,300	3 4 10
182·36	" " 26th " ...	35,077	37,834	1,38,050	18,267	101	56,102	344	15,742	3 11 0
182·36	" " 2nd April ...	23,736	26,823	1,71,633	17,010	76	43,904	270	15,743	2 8 1
182·36	" " 9th " ...	21,112	25,180	1,01,971	12,588	77	37,915	233	13,899	2 11 5
182·36	" " 16th " ...	20,630	23,479	99,823	12,581	60	36,120	216	13,405	2 9 8
182·36	" " 23rd " ...	23,174	21,732	1,17,968	13,828	58	35,638	230	13,418	2 10 0
182·36	" " 30th " ...	25,308	21,649	1,39,695	13,358	73	35,210	217	13,719	2 9 5
182·36	" " 7th May ...	23,395	21,266	1,28,413	11,109	67	32,442	201	12,934	2 7 11
182·36	" " 14th " ...	25,613	21,037	1,10,319	13,2-8	74	34,941	240	14,110	2 13 4
182·36	" " 21st " ...	25,414	26,091	1,33,084	17,608	44	36,735	236	13,201	2 12 5
182·36	" " 28th " ...	23,736	19,343	2,85,383		60	33,114	204	12,946	2 5 0
182·36	" " 4th June ...	24,417	22,638	80,643	10,416					
	Totals up to date ...	570,091	4,85,780	30,16,861	2,86,970	1,548	7,74,107	214	300,918	2 9 2

* Audited figures.

SOUTH BEHAR RAILWAY.

Approximate Return of Traffic for week ended 3rd June 1905 on 78·76 miles open.

	Coaching Traffic.		Merchandise and Mineral Traffic.		Other earnings (estimated).	Total earnings.	Traffic train-miles run.		
	Number of passengers.	Coaching receipts.	Weight carried.	Receipts.			Coaching.	Merchandise.	Total
		Rs. A. P.	Mds. s.	Rs. A. P.	Rs. A. P.	Rs. A. P.			
Total traffic for the week	15,873	6,661 0 0	59,294 0	4,295 0 0	32 0 0	10,018 0 0	1,938	1,390	3,328
Or per mile of railway		84 9 3	.....	53 10 4	0 6 6	138 10 0	.....	.....	.....
For previous 21 weeks of half-year	300,145*	1,46,084 0 0*	12,90,518 0†	78,606 0 0†	830 0 0‡	2,25,534 0 0	37,434§	30,369§	67,703
Total for 23 weeks ...	315,948	1,52,749 0 0	13,49,812 0	82,831 0 0	863 0 0	2,36,443 0 0	39,372	31,669	71,031
COMPARISON.									
Total for corresponding week of previous year.	21,030	9,243 7 1	70,022 20	4,393 13 0	34 14 6	13,672 2 7	1,732	1,103	2,835
Per mile of railway corresponding week of previous year.	.....	117 5 10	.....	55 12 7	0 7 1	173 9 6	.....	.....	.....
Total for corresponding 22½ weeks of previous year.	317,433	1,51,604 1 4	20,36,606 10	1,00,827 15 0	771 15 8	2,63,203 15 7	36,660	26,439	63,099

* Added No. of passengers 2,036 and Rs. 1,017 } On account of difference between the approximate and audited figures for the week ended
† Do. Mds. 14,801 and " 1,206 } 22nd April 1905.
‡ Deducted " 4 }
§ Audited figures up to 22nd April 1905.

1905. Abstract of progressive weekly returns of all earnings for 1905 in comparison with 1904.

Open mileage.	Period.	Coaching Traffic.		Merchandise and Mineral Traffic.		Other earnings.	Total.	Per mile of railway.	Train mileage.	
		No. of Passengers.	Rs.	Mds.	Rs.	Rs.	Rs.	Rs.	No.	Rate. Rs. A. P.
*78·76	Week ended 7th Jan. ...	14,187	6,086	55,908	3,940	24	9,959	133	3,471	2 12 6
*78·76	" " 14th " ...	12,404	5,846	63,916	3,923	33	9,802	124	3,306	2 15 6
*78·76	" " 21st " ...	12,228	6,122	58,437	2,850	23	8,995	114	3,306	2 11 6
*78·76	" " 28th " ...	13,309	6,080	56,307	2,835	25	8,940	114	3,147	2 13 4
*78·76	" " 4th Feb. ...	12,413	6,170	49,046	3,862	35	10,067	128	3,415	2 15 1
*78·76	" " 11th " ...	12,799	6,498	61,884	3,007	33	9,539	121	3,768	2 8 6
*78·76	" " 18th " ...	15,035	8,449	56,634	3,301	50	11,800	150	3,387	3 9 5
*78·76	" " 25th " ...	16,050	8,437	58,834	3,539	50	12,016	153	3,099	3 14 8
*78·76	" " 4th March ...	17,074	8,494	61,076	3,350	49	11,892	150	3,204	3 5 11
*78·76	" " 11th " ...	15,872	7,319	62,196	3,348	53	10,713	136	3,149	3 6 5
*78·76	" " 18th " ...	13,687	7,431	44,187	3,126	41	10,608	135	2,887	3 10 9
*78·76	" " 25th " ...	15,214	8,008	61,349	4,355	33	12,374	157	2,989	4 2 3
*78·76	" " 1st April ...	16,194	8,003	50,380	3,619	45	11,669	148	3,327	3 9 9
*78·76	" " 8th " ...	15,293	7,453	1,27,310	5,344	54	12,903	164	3,537	3 10 4
*78·76	" " 15th " ...	13,818	6,305	71,509	4,493	34	10,832	138	3,306	3 4 5
*78·76	" " 22nd " ...	14,388	6,719	78,586	4,963	45	11,727	149	3,306	3 8 9
78·76	" " 29th " ...	12,791	6,224	78,667	4,836	47	11,107	141	3,053	3 12 2
78·76	" " 6th May ...	14,326	6,344	64,068	3,990	43	10,381	132	3,385	3 1 1
78·76	" " 13th " ...	14,081	6,812	48,679	2,837	42	9,691	123	3,306	2 15 10
78·76	" " 20th " ...	14,714	6,449	50,450	3,640	42	10,141	129	3,306	3 1 1
78·76	" " 27th " ...	14,666	6,184	53,310	4,316	39	10,539	134	3,306	3 3 11
78·76	" " 3rd June ...	15,803	6,661	59,294	4,295	32	10,918	139	3,328	3 6 1
	Totals up to date ...	315,948	1,52,749	13,49,812	82,831	863	2,36,443	136	71,031	3 5 3

Abstract of progressive weekly returns of all earnings for 1905 in comparison with 1904—concluded. *1904.*

		No. of Passengers.	Rs.	Mds.	Rs.	Rs.	Rs.	Rs.	No.	Rate. Rs. A. P.
78·76	First 9 days of Jan. ...	15,823	7,103	83,119	4,602	36	11,831	150	3,290	3 9 6
78·76	Week ended 16th " ...	11,538	5,312	64,913	3,637	24	8,973	114	2,363	3 12 9
78·76	" " 23rd " ...	13,408	6,850	94,037	4,283	17	11,150	142	2,570	4 4 8
78·76	" " 30th " ...	12,814	6,240	56,734	4,101	38	10,378	132	2,736	3 13 3
78·76	" " 6th Feb. ...	12,692	6,858	59,201	4,140	35	10,713	136	2,831	3 10 6
78·76	" " 13th " ...	13,863	6,916	60,532	4,119	24	11,058	140	2,736	4 0 9
78·76	" " 20th " ...	14,432	7,477	1,15,081	3,631	27	11,735	149	2,993	3 14 9
78·76	" " 27th " ...	13,874	7,349	66,406	4,173	44	11,566	149	2,976	4 6 5
78·76	" " 5th March ...	13,104	7,233	60,688	4,041	70	11,349	144	2,993	3 12 10
78·76	" " 12th " ...	15,093	7,561	1,57,237	7,136	50	14,747	187	3,320	4 8 11
78·76	" " 19th " ...	14,054	7,050	94,571	5,181	43	12,273	156	3,157	3 14 3
78·76	" " 26th " ...	12,443	6,313	1,49,133	5,776	27	12,116	154	2,835	4 4 5
78·76	" " 2nd April ...	11,493	5,553	78,774	5,161	31	10,745	136	2,838	3 12 8
78·76	" " 9th " ...	12,853	5,813	85,699	6,935	53	12,780	162	2,838	4 8 2
78·76	" " 16th " ...	14,698	6,178	87,502	6,090	47	12,310	156	2,914	4 4 2
78·76	" " 23rd " ...	14,472	6,812	60,931	4,284	33	10,649	135	2,677	3 15 6
78·76	" " 30th " ...	15,013	6,754	86,274	5,699	39	12,472	158	3,150	3 15 4
78·76	" " 7th May ...	14,469	9,277	63,300	4,541	60	13,918	177	2,760	5 0 8
78·76	" " 14th " ...	15,556	6,880	54,647	4,616	35	11,429	146	2,677	4 4 4
78·76	" " 21st " ...	13,896	6,879	3,66,552	8,379	82	14,780	188	2,914	5 1 2
78·76	" " 28th " ...	15,358	6,708	72,773	4,650	85	11,893	145	2,914	4 14 7
78·76	" " 4th June ...	23,033	9,243	76,922	4,394	85	13,672	174	2,835	4 13 3
	Totals up to date	317,433	1,51,604	20,36,598	1,00,828	772	2,63,204	140	63,099	4 3 6

* Audited figures.

EASTERN BENGAL STATE RAILWAY SYSTEM

(INCLUDING B.-S. B., R. M. B. AND R.-K. L. RAILWAYS.)

Approximate Return of Traffic and Mileage for the week ended 3rd June 1905 on 1,061 miles open.

	Coaching Traffic.		Merchandise and Mineral Traffic.		Other earnings (including steam-boat).	Total earnings.	Traffic Train-miles run.		
	No. of passengers.	Coaching receipts.	Weight carried.	Receipts.			Coaching.	Merchandise.	Total.
		Rs. A. P.	Mds. s.	Rs. A. P.	Rs. A. P.	Rs. A. P.			
Total traffic for the week ...	268,670	1,21,740 0 0	8,73,920 0	1,12,420 0 0	13,400 0 0	2,46,560 0 0	46,025	30,454	76,479
Or per mile of railway	253	115 0 0	824 0	106 0 0	4 0 0*	225 0 0*	...	...	...
For previous 21 weeks of half-year†	5,957,605	28,79,733 0 0	2,39,26,416 0	28,72,209 0 0	4,11,793 0 0	61,63,734 0 0	937,344	710,898	1,648,142
Total for 22 weeks ...	6,225,765	30,01,473 0 0	2,48,00,336 0	29,84,629 0 0	4,24,193 0 0	64,10,294 0 0	1,003,369	741,352	1,744,621
COMPARISON.									
Total for corresponding week of previous year	264,803	1,23,968 0 0	7,44,636 0	1,16,922 0 0	9,675 0 0	2,42,465 0 0	39,360	38,631	77,991
Per mile of railway corresponding week of previous year (967 miles)	277	128 0 0	776 0	116 0 0	1 0 0	248 0 0	...	...	...
Total to corresponding date of previous year	5,989,874	29,69,178 0 0	2,30,30,636 0	35,00,686 0 0	5,09,211 0 0	70,39,075 0 0	916,217	894,287	1,810,504

* Excluding ferry earnings, Rs 8,060
† Audited up to week ending 8th April 1905.

DACCA STATE RAILWAY.

Approximate Return of Traffic and Mileage for the week ended 3rd June 1905 on 66 miles open.

	Coaching Traffic.		Merchandise and Mineral Traffic.		Other earnings.	Total earnings.	Traffic Train-miles run.		
	No. of passengers.	Coaching receipts.	Weight carried.	Receipts.			Coaching.	Merchandise.	Total.
		Rs. A. P.	Mds. s.	Rs. A. P.	Rs. A. P.	Rs. A. P.			
Total traffic for the week ..	27,170	* 7,290 0 0	16,560 0	1,490 0 0	170 0 0	8,950 0 0	3,292	1,148	4,440
Or per mile of railway ...	316	85 0 0	193 0	17 0 0	2 0 0	104 0 0	...	...	...
For previous 21 weeks of half-year*	611,500	1,80,138 0 0	6,84,979 0	53,754 0 0	4,770 0 0	2,38,662 0 0	64,363	25,430	89,803
Total for 22 weeks ...	638,670	1,87,428 0 0	7,01,539 0	55,244 0 0	4,940 0 0	2,47,612 0 0	67,655	26,587	94,243
COMPARISON.									
Total for corresponding week of previous year	28,350	7,857 0 0	17,162 0	1,723 0 0	—73 0 0	9,508 0 0	3,334	974	4,308
Per mile of railway corresponding week of previous year ...	330	91 0 0	200 0	20 0 0	—1 0 0	110 0 0	...	...	...
Total to corresponding date of previous year	606,160	1,94,350 0 0	10,53,596 0	69,397 0 0	5,319 0 0	2,69,366 0 0	65,467	36,066	103,533

* Audited up to week ending 8th April 1905.

COOCH BEHAR STATE RAILWAY.

Approximate Return of Traffic and Mileage for the week ended 3rd June 1905 on 33·6 miles open.

	Coaching Traffic.		Merchandise and Mineral Traffic.		Other earnings (including ferry).	Total earnings.	Traffic Train-miles run.		
	No. of passengers.	Coaching receipts.	Weight carried.	Receipts.			Coaching.	Merchandise.	Total.
		Rs. A. P.	Mds. s.	Rs. A. P.	Rs. A. P.	Rs. A. P.			
Total traffic for the week ...	2,630	1,290 0 0	8,430 0	830 0 0	10 0 0	2,130 0 0	470	(a)459	929
Or per mile of railway ...	100	38 0 0	251 0	25 0 0	...	63 0 0	...	...	...
For previous 21 weeks of half-year*	65,386	28,789 0 0	10,73,478 0	34,291 0 0	243 0 0	63,323 0 0	9,555	33,743	43,298
Total for 22 weeks ...	72,048	30,079 0 0	10,81,908 0	35,121 0 0	253 0 0	65,453 0 0	10,025	33,202	43,227
COMPARISON.									
Total for corresponding week of previous year ...	2,479	1,144 0 0	16,969 0	1,615 0 0	13 0 0	2,572 0 0	441	1,847	2,288
Per mile of railway corresponding week of previous year ..	104	34 0 0	502 0	48 0 0	.....	76 0 0	...	...	...
Total to corresponding date of previous year	71,443	27,413 0 0	13,27,237 0	40,327 0 0	301 0 0	68,040 0 0	10,194	36,906	47,100

(a) Ballast train-miles 66.
* Audited up to week ending 8th April 1905.

MYMENSINGH-JAGANNATHGANJ RAILWAY.

Approximate Return of Traffic and Mileage for the week ended 3rd June 1905 on 51·37 miles open.

	Coaching Traffic.		Merchandise and Mineral Traffic		Other earnings (including ferry).	Total earnings.	Traffic Train-miles run.		
	No. of passengers.	Coaching receipts.	Weight carried.	Receipts.			Coaching.	Merchandise.	Total.
		Rs. A. P.	Mds. S.	Rs. A. P.	Rs. A. P.	Rs. A. P.			
Total traffic for the week ...	7,920	2,200 0 0	3,230 0	510 0 0	10 0 0	2,720 0 0	1,186	270	1,456
Or per mile of railway ...	146	43 0 0	100 0	10 0 0	...	53 0 0	...	...	...
For previous 21 weeks of half-year*	180,231	53,413 0 0	3,12,027 0	15,449 0 0	288 0 0	69,150 0 0	22,767	7,299	30,066
Total for 22 weeks ...	187,741	55,613 0 0	3,20,257 0	15,959 0 0	298 0 0	71,870 0 0	23,925	7,569	31,494
Comparison.									
Total for corresponding week of previous year	8,266	2,361 0 0	11,089 0	541 0 0	5 0 0	2,907 0 0	1,186	240	1,426
Per mile of railway corresponding week of previous year ...	156	45 0 0	209 0	10 0 0	...	55 0 0	...	...	...
Total to corresponding date of previous year	230,919	65,753 0 0	4,23,602 0	22,°35 0 0	498 0 0	88,285 0 0	24,360	11,549	35,909

* Audited up to week ending 8th April 1905.

BENGAL CENTRAL RAILWAY COMPANY, LIMITED.

Approximate Return of Traffic and Mileage for the week ended 3rd June 1905 on 139 miles open.

	Coaching Traffic.		Merchandise and Mineral Traffic.		Other earnings.	Total earnings.	Traffic Train-miles run.		
	Number of passengers.	Coaching receipts.	Weight carried.	Receipts.			Coaching.	Merchandise.	Total.
		Rs. A. P.	Mds. S.	Rs. A. P.	Rs. A. P.	Rs. A. P.			
Total traffic for the week ...	43,484	15,265 0 0	51,027 0	4,306 0 0	68 0 0	19,639 0 0	4,074	3,914	7,988
Or per mile of railway	324	118 0 0†	367 0	31 0 0	.....	149 0 0	.....	...	.....
For previous 21 weeks of half-year*	846,062	3,39,854 0 0	15,66,191 0	1,23,901 0 0	80,339 0 0	5,33,094 0 0	98,717	58,078	156,795
Total for 22 weeks ...	889,546	3,55,119 0 0	16,19,218 0	1,27,207 0 0	80,407 0 0	5,52,733 0 0	102,871	61,989	164,860
Comparison.									
Total for corresponding week of previous year	31,951	15,567 0 0	48,715 0	4,402 0 0	428 0 0	20,407 0 0	5,687	2,111	7,798
Per mile of railway corresponding week of previous year ...	239	120 0 0†	350 0	32 0 0	3 0 0	155 0 0	.....	.....	.....
Total to corresponding date of previous year	891,609	3,46,596 0 0	20,25,535 0	1,45,993 0 0	65,930 0 0	5,58,519 0 0	108,143	56,088	164,230

* Audited up to week ended 82nd April 1905.
† Coaching traffic calculated on 130 miles only.

ASSAM-BENGAL RAILWAY.

Approximate Return of traffic for the week ended 3rd June 1905 on 737 miles open for all descriptions of traffic, and an additional 3 miles for goods traffic only.

	Coaching Traffic.		Merchandise and Mineral Traffic.		Other earnings (estimated), including steam-boat.	Total earnings.	Traffic Train-miles run.		
	No. of passengers.	Coaching receipts.	Weight carried.	Receipts.			Coaching.	Merchandise.	Total.
		Rs. A. P.	Mds. S.	Rs. A. P.	Rs. A. P.	Rs. A. P.			
Total traffic for the week ...	42,977	25,382 0 0	1,19,448 0	20,397 0 0	2,541 0 0	49,270 0 0	10,494	13,758	24,252
Or per mile of railway	57·09	35·06	161·48	27·65	3 54	66·72	14·23	18 69	32·92
For previous 21 weeks of half-year	1,008,581	6,66,140 0 0	25,49,974 0	5,18,340 0 0	55,392 0 0	12,39,872 0 0	223,400	313,805	536,205
Total for 22 weeks ...	1,051,558	6,91,971 0 0	26,68,822 0	5,38,937 0 0	57,933 0 0	12,89,142 0 0	232,974	327,653	560,627
Comparison.									
Total for corresponding week of previous year	38,466	22,034 0 0	1,37,358 0	20,906 0 0	2,621 0 0	45,561 0 0	6,085	9,900	15,985
Per mile of railway corresponding week of previous year ...	52·18	29·90	185·59	28·35	3·54	61·69	8·26	13·50	21·76
Total to corresponding date of previous year	966,023	6 13,036 0 0	30,31,350 0	4,40,788 0 0	62,900 0 0	11,16,724 0 0	189,023	229,374	418,399

FINANCIAL YEAR.

Approximate Statement of Gross Receipts of the Assam-Bengal Railway.

Receipts for week ending 3rd June 1905.			Receipts for week ending 4th June 1904.			Total receipts from 1st April 1905 to 3rd June 1905.			Total receipts from 1st April 1904 to 4th June 1904.			Total increase in 1905.	Total decrease in 1905.
Mean mileage worked.	Receipts.	Per mile worked	Mean mileage worked.	Receipts.	Per mile worked.	Mean mileage worked.	Total receipts.	Per mile worked per week.	Mean mileage worked.	Total receipts.	Per mile worked per week.		
	Rs.	Rs.		Rs.	Rs.		Rs.			Rs.		Rs.	
740	49,276	66·72	740	45,561	61·69	740	5,03,435	...	740	3,85,846	...	1,22,589	.....

DARJEELING-HIMALAYAN RAILWAY COMPANY, LIMITED.

			Rs.	A.	P.	Rs.	A.	P.
Approximate earnings for the week ending 10th June 1905	...	Coaching ...	9,728	0	0			
		Goods ...	16,280	0	0	26,082	0	0
		Other earnings ...	74	0	0			
Audited earnings for the corresponding period of 1904	...	Coaching ...	7,516	0	0			
		Goods ...	13,106	0	0	20,746	0	0
		Other earnings ...	124	0	0			
		Increase ...				5,336	0	0
Receipts per mile for the week ending 10th June 1905	...	...		...		511	6	7
Ditto for the corresponding period of 1904	...	...		...		406	12	7
		Increase ...				104	10	0
Receipts from 1st January to 10th June 1905	...	...		...		4,12,797	0	0
Ditto for the corresponding period of 1904	...	...		...		4,51,129	0	0
		Decrease ...				38,332	0	0

Printed at the Printing Office, and published by the Book Depôt, of the Bengal Secretariat, Writers' Buildings, in the City of Calcutta, on 21st June 1905.

REGISTERED No. C 209.]

No. 26 of 1905.

The Calcutta Gazette.

WEDNESDAY, JUNE 28, 1905.

CONTENTS.

	Page
PART I.—Orders and Notifications by the Lieutenant-Governor of Bengal, the High Court, Government Treasury, etc.	1147—1165
PART IA.—Orders and Notifications by the Government of India	121—122
PART IB.—Orders by the Lieutenant-Governor of Bengal	103—112
PART II.—Advertisements	799—830
PART III.—Acts of the Bengal Council	Nil
PART IV.—Bills of the Bengal Council	Nil
PART IVA.—Proceedings of the Bengal Legislative Council	Nil
PART V.—Acts of the Governor-General's Council assented to by the Governor-General	Nil
PART VI.—Bills introduced into the Council of the Governor-General for making Laws and Regulations or published under Rule 23	Nil
APPENDIX.—Marine Notifications	207—217
SUPPLEMENT No 26:—	
Resolution on the Report on Emigration from the Port of Calcutta to British and Foreign Colonies in the year 1904	935—972
Liberality of Sreemati Dinamoni Chaudhurani of Santosh	937
Joint-Stock Companies for the year 1904-1905	938
Statistical Return of Crops, Circular and Eastern Canals, Irrigation operations of Fasl Rabi, 1904-1905 Results of Meteorological Observations, Railway Traffic Receipts, &c., &c.	965—972

PART I.

Orders and Notifications by the Lieutenant-Governor of Bengal, the High Court, Government Treasury, &c.

No. 193T.

The 27th June, 1905.—In exercise of the power conferred by sections 36 and 48 of the Indian Councils Act, 1861 (24 and 25 Vict., c. 67), the Lieutenant-Governor is pleased to appoint Saturday, the 8th July, 1905, at 11 A.M., as the time, and the Council Chamber in the Bengal Secretariat as the place, for a meeting of the Bengal Legislative Council.

By order of the Lieutenant-Governor of Bengal,

F. G. WIGLEY,
Secy. to the Bengal Council.

ORDERS BY THE LIEUT.-GOVERNOR OF BENGAL.

No. 2932A.

APPOINTMENTS AND TRANSFERS.

No. 1825A D.—The 23rd June 1905.—Mr. J. T. Baboneau, Deputy Magistrate and Deputy Collector, on leave, is appointed to act as Magistrate and Collector of Khulna, during the absence, on leave, of Mr. Ahsanuddin Ahmad, or until further orders.

Khulna.

No. 1858A.D.—The 27th June 1905.—Mr. J. T. Rankin, Officiating Magistrate and Collector, Dacca, is appointed to act as Junior Secretary to the Board of Revenue, Lower Provinces, during the absence, on leave, of Mr. H. Wheeler, or until further orders.

Dacca.
Calcutta.

No. 1860A.D.—The 27th June 1905.—Mr. H. W. P. Scroope, Officiating Magistrate and Collector, Tippera, is appointed to act, until further orders, as Magistrate and Collector of Dacca.

Tippera.
Dacca.

No. 1862A.D.—The 27th June 1905.—Mr. A. Mellor, Officiating Joint-Magistrate and Deputy Collector, Rampur Hât, Birbhum, is appointed to act temporarily as Magistrate and Collector of Tippera.

Birbhum.
Tippera.

No. 1864A.D.—The 27th June 1905.—Mr. J. D. Sifton, Officiating Joint-Magistrate and Deputy Collector, Backergunge, is appointed to have charge of the Rampur Hât subdivision of the Birbhum district.

Backergunge.
Birbhum.

No. 1878A.D.—The 27th June 1905.—Mr. C. H. Moseley, Officiating Joint-Magistrate and Deputy Collector, Bettiah, Champaran, is appointed to have charge of the Gumla subdivision of the Ranchi district.

Champaran.
Ranchi.

No. 1880A.D.—The 27th June 1905.—Mr. W. S. Hopkyns, Assistant Magistrate and Collector, Gaya, is appointed to have charge of the Bettiah subdivision of the Champaran district.

Gaya.
Champaran.

No. 1889A.D.—The 27th June 1905.—Mr. J. Reid, Officiating Joint-Magistrate and Deputy Collector, Gumla, Ranchi, is transferred to the head-quarters station of that district.

Ranchi.

No. 1898A.D.—The 27th June 1905.—Babu Jogendra Nath Mitra, Subordinate Judge, 24-Parganas, is appointed to be also an Assistant Sessions Judge in that district.

24-Parganas.

No. 1906A.D.—The 27th June 1905.—Mr. G. Milne, Assistant Magistrate and Collector, is posted to the head-quarters station of the 24-Parganas district and is appointed to act, until further orders, in the second grade of Joint-Magistrates and Deputy Collectors, on being relieved of his appointment as Officiating Magistrate and Collector, Shahabad.

Shahabad.
24-Parganas.

No. 1927A.D.—The 27th June 1905.—Babu Gati Krishna Neogy, Deputy Magistrate and Deputy Collector, Jamalpur, Mymensingh, is appointed to have charge of the Tangail subdivision of that district

Mymensingh.

No. 1929A.D.—The 27th June 1905.—Babu Jogneshwar Biswas, Deputy Magistrate and Deputy Collector, Tangail, Mymensingh, is appointed to have charge of the Jamalpur subdivision of that district.

Mymensingh.

No. 1931A.D.—The 27th June 1905.—Babu Ram Niranjan Prasad, Deputy Magistrate and Deputy Collector, on leave, is posted to the head-quarters station of the Hooghly district.

Hooghly.

No. 1952A.D.—The 27th June 1905.—Babu Haripada Ghosh, Deputy Magistrate and Deputy Collector, is posted to the head-quarters station of the Hazaribagh district, on being relieved of his Settlement duties in Murshidabad.

Hazaribagh.
Murshidabad.

No. 1965A.D.—The 27th June 1905.—Babu Praphulla Sankar Sen, Deputy Magistrate and Deputy Collector, on leave, is posted to the head-quarters station of the Hooghly district.

Hooghly.

EDUCATION.—*No. 1759A.D.—The 21st June 1905.*—Maulvi Kamaluddin Ahmad, M.A., substantive *pro tempore* Sub-Deputy Collector, Hooghly, is appointed substantively *pro tempore* to class VIII of the Provincial Educational Service, and to be Superintendent of the Chittagong Madrasah, with effect from the 20th July 1905, *vice* Maulvi Muhammad Yakub, about to retire.

Hooghly.
Chittagong.

No. 1894A.D.—The 27th June 1905.—Maulvi Mohammed Azizul Huq, M.A., Head Master, Patna City School (class II of the Subordinate Educational Service), is appointed to class VII of the Provincial Educational Service and to be Head Master of the Hooghly Collegiate School.

Patna.
Hooghly.

ECCLESIASTICAL.—*No. 1892A.D.—The 27th June 1905.*—The Revd. Canon A. S. Dyer, Officiating Archdeacon of Calcutta, is appointed to act as Chaplain of St. Thomas' Church, Calcutta, in addition to his own duties, with effect from the date on which he may take over charge.

Calcutta.

ZOOLOGICAL.—*No. 1853A.D.—The 24th June 1905.*—Mr. W. K. Dods is appointed to be a member of the Committee of Management of the Zoological Garden, Calcutta.

Calcutta.

LEAVE.

GENERAL.—*No. 1823A.D.—The 23rd June 1905.*—Mr. Ahsanuddin Ahmad, Magistrate and Collector, Khulna, is allowed combined leave for six months, viz., privilege leave for three months under article 260 of the Civil Service Regulations, and leave on private affairs for the remaining period under section 4 (*b*) of Leave Regulations, under article 566 of the Civil Service Regulations, with effect from the 17th July 1905.

Khulna.

No. 1837A.D.—The 24th June 1905.—Maulvi Abul Mosuffar Ahmad, Deputy Magistrate and Deputy Collector, Contai, Midnapore, is allowed leave for six weeks, under article 260 of the Civil Service Regulations, with effect from the 13th June 1905, or any subsequent date on which he may avail himself of it.

Midnapore.

No. 1856A.D.—The 27th June 1905.—Mr. H. F. Samman, Officiating Junior Secretary to the Board of Revenue, Lower Provinces, is allowed combined leave for one year, viz., privilege leave for two months and thirty days under article 260 of the Civil Service Regulations, with effect from the 1st August 1905, and furlough for nine months and one day under article 308 (*b*) of the Regulations.

Calcutta.

No. 1956A.D.—The 27th June 1905.—Babu Aukshay Kumar Sur, Deputy Magistrate and Deputy Collector, Purnea, is allowed leave for one month, under article 260 of the Civil Service Regulations, with effect from the 12th June 1905.

Purnea.

VOLUNTEERS.—*No. 1843A.D.—The 24th June 1905.*—Captain (Honorary Major) George Hamilton Maflin, V.D., Second (Presidency) Battalion, Calcutta Volunteer Rifles, has been granted, by the General Officer, Commanding Presidency Brigade, leave of absence for six months, with effect from the 15th June 1905.

Calcutta.

POWERS.

No. 1765A.D.—The 21st June 1905.—Mr. D. C. Patterson, Assistant Magistrate and Collector, Sonthal Parganas, is vested with the powers of a Deputy Collector.

Sonthal Parganas.

No. 1767A.D.—The 21st June 1905.—Mr. Sarat Kumar Ghose, Assistant Magistrate and Collector, Hooghly, is vested with the powers of a Deputy Collector.

Hooghly.

No. 1785A.D.—The 21st June 1905.—The officers named below are vested with the powers of a Deputy Collector:—

Mr. B. A. Collins,	Assistant Magistrate and Collector	... Saran.
„ H. T. Cullis,	ditto	... Gaya.
„ C. L. Philip,	ditto	... Monghyr.
„ J. A. Woodhead,	ditto	... Mymensingh.
„ P. S. Shottle,	ditto	... Manbhum.
„ H. E. Spry,	ditto	... Muzaffarpur.

No. 1807A.D.—The 23rd June 1905.—Mr. W. A. Cosgrave, Assistant Magistrate and Collector, Chittagong, is vested with the powers of a Deputy Collector.

Chittagong.

No. 1816A.D—The 23rd June 1905.—Babu Ashootosh Bhattacharjee, Deputy Collector, Jessore, is vested with the powers of a Collector, under Act I of 1894, in that district.

Jessore.

No. 1835A.D.—The 24th June 1905.—Mr. J. A. Dawson, Assistant Magistrate and Collector, Patna, is vested with the powers of a Deputy Collector.

Patna.

The following order is republished from the *Assam Gazette*:—

No. 5019G.—The 20th June 1905.—Assistant Surgeon Sarat Chandra Biswas held civil medical charge of the Darrang district from the 11th December 1904 to the 5th January 1905, both days inclusive, during the absence, on deputation, of Lieutenant-Colonel J. W. U. Macnamara, I.M.S.

R. W. CARLYLE,
Offg. Chief Secy. to the Govt. of Bengal.

NOTIFICATION.

No. 1841A.D.—The 24th June 1905.—Mr. J. S. Mackay, Deputy Magistrate and Deputy Collector, Singhbhum, having passed an examination in the Ho dialect of the Kol language, in accordance with the rules laid down in Appendix VI to the rules for the departmental examination of Assistant Magistrates and others, dated the 28th May 1895, is authorized to draw the prescribed reward of Rs. 1,000 (one thousand).

Singhbhum.

R. W. CARLYLE,
Offg. Chief Secy. to the Govt. of Bengal.

NOTIFICATION.

No. 1847 A.D.—The 24th June 1905.—Babu Hem Kumar Mullick, Deputy Magistrate and Deputy Collector, Rajmahal, Sonthal Parganas, having passed an examination in the Sonthali language, in accordance with the rules laid down in Appendix VI to the rules for the Departmental Examination of Assistant Magistrates and others, dated the 28th May 1895, is authorized to draw the prescribed reward of Rs. 1,000 (one thousand).

Sonthal Parganas.

R. W. CARLYLE

Offg. Chief Secy. to the Govt. of Bengal.

REVENUE DEPARTMENT.

NOTIFICATIONS.

No. 1414T.R.—The 21st June 1905.—The Lieutenant-Governor sanctions the transfer of the undermentioned villages from the jurisdiction of thana Manteshwar, subdivision Kalna, to that of thana Katwa, subdivision Katwa, in the district of Burdwan, with effect from the 1st July 1905:—

Burdwan.

No.	Name of village.	Thakbust No.	Pargana.
1	Poeni	115	Dheyia.
2	Kataria	114	Ditto.
3	Kamal	109	Ditto.
4	Jamra	108	Ditto.
5	Shibprosadpur or Kooarah ...	107	Ditto.
6	Gidhgram	112	Ditto.
7	Kulsah	106	Ditto.
8	Chandrahati or Aoreh	105	Ditto.

NOTE.—In the above list the names given are those of the villages as demarcated and surveyed by the Revenue Survey Department and as shown on their maps and records.

In consequence of the above alteration, the following are declared to be the revised boundaries of thanas Katwa and Manteshwar, in modification of the boundaries defined by the notification, dated the 1st September 1884, published in the *Calcutta Gazette* of the 3rd idem:—

Thana Katwa.

On the north and east—The boundary remains unchanged.

On the south—The boundary remains unaltered from the village of Akidutpur on the east to that of Pulsona on the west; thence it runs westward along the boundaries of the following villages, viz.—Shibprosadpur or Kooarah, Jamra, Kamal, Gidhgram, and Poeni.

On the west—The boundary runs northward along the boundaries of villages Poeni, Kataria and Gidhgram; thence the boundary remains the same as defined by the notification, dated the 1st September 1884.

Thana Manteshwar.

On the north—Thana Katwa as above described.

On the east and south—The boundary remains unaltered.

On the west—The boundary runs northward along the boundaries of the following villages, viz.—Gopalnagar, Mamudpur, Baenia, Toolea, Hoseinpur, Autsapur, Balendah, Ausgram, Nobogram and Aligram till it meets the southern boundary of thana Katwa.

NOTE.—In the above description the villages named as situated on the boundaries are included within the limits of the thanas to which reference is made.

No. 1427T.R.—The 21st June 1905.—In the form of rent receipt prescribed, for certain portions of the Chota Nagpur Division, in Notification No. 1712L.R., dated the 23rd March 1905, published at pages 539-540, Part I of the *Calcutta Gazette* of the 29th idem, *for* the word "quality" in the heading of the fifth column of the statement in both the Landlords' and Tenants' portions of the form, *substitute* the word "Quantity."

Chota Nagpur Division, except the district of Manbhum.

No. 1446L.R.—The 24th June 1905.—Maulvi Masudul Hosain, substantive *pro tempore* Deputy Collector, at present employed as an Assistant Settlement Officer in the Sonthal Parganas, is granted privilege leave, under article 260 of the Civil Service Regulations, for six weeks from the 15th July 1905 or any subsequent date on which he may avail himself of the leave.

Sonthal Parganas.

No. 1456T R.—The 24th June 1905.—The Lieutenant-Governor has been pleased to sanction the undermentioned transfer of villages from one Thana to another in the district of Champaran :—

No.	Name of village.	Thakbust map number.	Name of Pargana.
	From thana Shikarpur to thana Bagaha.		
1	Pisrampur or Kutua	23	Majhauwa-Tappa Buloca.
2	Suhusram	2	Majhauwa-Tappa Chigwan Butsura.
	From thana Bagaha to thana Shikarpur.		
1	Mungoorha Khoord	34	Majhauwa-Tappa Buloca.
2	Padree Kulan*	32	Ditto.

* In the Revenue Survey Records "Danwar kulan and Padree kulan" was shown as one mauza ; whereas it has been divided by the Settlement Department into two villages viz., Danwar and Padree.
The village Danwar has been placed in thana Bagaha.

No. 1489T.R.—The 27th June 1905.—Babu Surendra Nath Sen, Sub-Deputy Collector, on leave, is appointed to be an Assistant Settlement Officer in the district of Ranchi, with effect from the date on which he may join his appointment.

Ranchi.

No. 1496T.R.—The 27th June 1905.—Maulavi Mahamad Chainuddin, Sub-Deputy Collector, is appointed to be the Settlement Officer of estate Fatehsingh, in the district of Murshidabad.

Murshidabad.

R. W. CARLYLE,
Offg. Chief Secy. to the Govt. of Bengal.

DECLARATION.

No. 1378T.R.—The 21st June 1905.—Whereas it appears to the Lieutenant-Governor of Bengal that land is required to be taken by Government at the expense of the Chittagong Municipality for a public purpose, viz, for widening the Municipal Road, which joins the Sadarghat Road and the Paltan Road, in the village of Karnat, also called Alkaran, police-station Chittagong, zilla Chittagong, it is hereby declared that for the above purpose, a piece of land measuring, more or less, ·07 kani or 4 poles of standard measurement, bounded on the north by Paltan Road, on the east by the Municipal Road joining the Sadarghat Road and Paltan Road, on the south by Sadarghat Road, and on the west by Abdul Jamir Sadagar's rayati land and Rahanoddin's stable land, is required within the aforesaid village of Karnat, also called Alkaran.

Chittagong.

This declaration is made, under the provisions of section 6 of Act I of 1894, to all whom it may concern.

A plan of the land may be inspected in the office of the Collector of Chittagong.

R. W. CARLYLE,
Offg. Chief Secy. to the Govt. of Bengal.

DECLARATION.

No. 1424T.R.—The 21st June 1905.—Whereas it appears to the Lieutenant-Governor of Bengal that land is required to be taken by Government at the public expense for a public purpose, viz, for the Inspection Bungalow at Guhagram, in the village of Guhagram, pargana Champainagar, zilla Burdwan, it is hereby declared that for the above purpose a piece of land measuring, more or less, 1 bigha 7 cottahs and 4 chitaks of standard measurement, bounded on the north by the lakheraj land of Bhusan Chandra Datta, on the south by the Damodar left embankment, on the east by the lakheraj land of Rajendra Chandra Bhattacharjee, and on the west by the lakhiraj land of Bhusan Chandra Datta, is required within the aforesaid village of Guhagram.

Burdwan.

This declaration is made, under the provisions of section 6, Act I of 1894, to all whom it may concern.

A plan of the land may be inspected in the office of the Executive Engineer, Northern Drainage and Embankment Division, Calcutta.

R. W. CARLYLE,
Offg. Chief Secy. to the Govt. of Bengal.

DECLARATION.

No. 1425T.R.—The 20th June 1905.—Whereas it appears to the Lieutenant-Governor of Bengal that land is required to be taken by Government at the public expense for a public purpose, viz., for Inspection Bungalow at Edilpur, Damodar left embankment, 18¼th mile, in the village of Edilpur, pargana Burdwan, zilla Burdwan, it is hereby declared that for the above purpose a piece of land measuring, more or less, 9 bighas, 12 cottahs and 14 chitaks of standard measurement, bounded on the north by the mal lands of Abhoy Charan Ghose and Grish Chandra Chakravartty, on the south by the Damodar left embankment, on the east by the lakhiraj lands of Makhon Lal Dass, and on the west by the mal and lakhiraj lands of Grish Chandra Chakravartty, Gobordhon Ghose and Haralal Bagli, is required within the aforesaid village of Edilpur.

Burdwan.

This declaration is made, under the provisions of section 6 of Act I of 1894, to all whom it may concern.

A plan of the land may be inspected in the office of the Executive Engineer, Northern Drainage and Embankment Division, Calcutta.

R. W. CARLYLE,

Offg. Chief Secy. to the Govt. of Bengal.

DECLARATION.

No. 1426T.R.—The 22nd June 1905.—Whereas it appears to the Lieutenant-Governor of Bengal that land is required to be taken by Government at the expense of the Backergunge District Board, for a public purpose, viz., for constructing the 1st section of Barisal to Bowfal Road, up to Charamuddy done, in the villages of Chandpur, Charkowa, Dinar, and Durgapur, pargana Chandra-dwip and tappe Nazirpur, zilla Backergunge, it is hereby declared that for the above purpose a piece of land measuring, more or less, 82 bighas, 14 cottahs and 15½ chitaks of standard measurement, running north-west to south-east, 18,330 feet in length and 65 feet in breadth, is required within the aforesaid villages of Chand-pur, Charkowa, Dinar and Durgapur

Backergunge.

This declaration is made, under the provisions of section 6 of Act I of 1894, to all whom it may concern.

A plan of the land may be inspected in the office of the Collector of Backergunge.

R. W. CARLYLE,

Offg. Chief Secy. to the Govt. of Bengal.

DECLARATION.

No. 1457T.R.—The 24th June 1905.—Whereas it appears to the Lieutenant-Governor of Bengal that land is required to be taken by Government at the expense of the District Board of Ranchi, for a public purpose, viz., for the construction of the first section of the Ranchi-Gumla Road from chain 200 to chain 422, in the villages of Bajra, Gutua, and Soparan, pargana Khukra, zilla Ranchi, it is hereby declared that for the above purpose a strip of land measuring, more or less, 134 bighas 9 cottahs and 9 chitaks of standard measurement, bounded on the north and south by lands of the Maharaja of Chota Nagpur, Lodo Pahan of Bajra, Lal Harakh Nath Sah Deo of Gutua, the Jerria encumbered estate, Dem Uraon of Simulia, Burhan Manki of Simulia and Chamra Sahu of Nagri, marked by brick pillars; on the east by the Ranchi-Duladari Road; and on the west by the existing Ranchi-Gumla Road, is required within the aforesaid villages of Bajra, Gutua and Soparan.

Ranchi.

This declaration is made, under the provisions of section 6 of Act I of 1894, to all whom it may concern.

A plan of the land may be inspected in the office of the Chairman, District Board, Ranchi.

R. W. CARLYLE,

Offg. Chief Secy. to the Govt. of Bengal.

DECLARATION.

No. 1458T.R.—The 24th June 1905.—Whereas it appears to the Lieutenant-Governor of Bengal that additional land is required to be taken by Government at the expense of the Bengal Provincial Railway Company, Limited, public purpose, viz., for a Locomotive tank at Magra for the use of the Bengal

Hooghly.

Provincial Railway, in the village of Kola, pargana Pownan, zilla Hooghly, it is hereby declared that for the above purpose a piece of land measuring, more or less, 16 cottahs and 30 square feet of standard measurement corresponding to 1 rood 2 poles and 12·83 square yards, bounded on the north by Bengal Provincial Railway land, south by Purna Chandra Ghose's garden, east by Purna Chandra Ghose's garden and Hari Charan Roy's paddy field, and on the west by Purna Chandra Ghose's paddy field, is required within the aforesaid village of Kola.

Mines of coal, iron-stone, slate or other minerals lying under the land, except only such parts of the mines and minerals as it may be necessary to dig or carry away, or use in the construction of the work for the purpose of which the land is being acquired, are not needed.

This declaration is made, under the provisions of section 6, Act I of 1894, and section 3, clause (1), Act XVIII of 1885, to all whom it may concern.

A plan of the land may be inspected in the office of the Manager and Engineer, Bengal Provincial Railway at Magra, or in the office of the Collector of Hooghly and Chinsura.

R. W. CARLYLE,
Offg. Chief Secy. to the Govt. of Bengal.

DECLARATION.

No. 1459T.R.—The 26th June 1905.—Whereas it appears to the Lieutenant-Governor of Bengal that land is required to be taken by Government at the expense of the District Board of Dacca for a public purpose, viz., for extension of the Mulchar Dispensary Compound, in the village of Mulchar, parganas Vikrampur and Rajnagar, zilla Dacca, it is hereby declared that for the above purpose a piece of land measuring, more or less, 2 bighas 4 cottahs 1½ dhurs of standard measurement, bounded on the north by Akhoy Babu's Road, on the east by the District Board Road, on the south by Syama Charan Sen and Akhoy Babu's lands, and on the west by tank and dispensary, is required within the aforesaid village of Mulchar.

Dacca.

This declaration is made, under the provisions of section 6 of Act I of 1894, to all whom it may concern.

A plan of the land may be inspected in the office of the Chairman of the District Board, Dacca.

R. W. CARLYLE,
Offg. Chief Secy. to the Govt. of Bengal.

FINANCIAL DEPARTMENT.

No. 307T.O.—The 24th June 1905.—Maulvi Abdul Majid, Sub-Deputy Opium Agent, Partabgarh, is granted privilege leave for two weeks, under article 260 of the Civil Service Regulations, with effect from the 7th June 1905 or any subsequent date on which he may avail himself of it.

Partabgarh and Rae Bareli.

Mr. J. O. D. Murray, Sub-Deputy Opium Agent, Rae Bareli, is appointed to hold charge of the Partabgarh division, in addition to his own duties, during the absence, on leave, of Maulvi Abdul Majid or until further orders.

E. A. GAIT,
Offg. Secy. to the Govt. of Bengal.

MEDICAL DEPARTMENT.

No. 1282T.M.—The 24th June 1905.—Military Assistant Surgeon A. A. E. Baptist, attached to the Presidency General Hospital, is allowed privilege leave for three months, under article 250 (*a*) of the Civil Service Regulations, with effect from the date on which he availed himself of it.

2. This supersedes Notification No. 144Medl., dated the 9th January 1905.

E. A. GAIT,
Offg. Secy. to the Govt. of Bengal.

JUDICIAL DEPARTMENT.

No. 2933A.

APPOINTMENTS AND TRANSFERS.

No. 1790A.D.—The 22nd June 1905.—Babu Asvini Kumar Basu, Munsif of Mymensingh, is appointed to act as Subordinate Judge of the same district during the absence, on leave, of Babu Anund Nath Majumdar, or until further orders.

Mymensingh.

No. 1792A.D.—The 22nd June 1905.—Babu Sasi Kumar Ghose, B.L., is appointed to act as a Munsif in the district of Mymensingh, to be ordinarily stationed at the Sadar station, during the absence, on deputation, of Babu Asvini Kumar Basu, or until further orders.

Mymensingh.

No. 1900A.D.—The 27th June 1905.—Babu Kanty Chunder Mukerji, Munsif of Bagerhat, in the district of Jessore, is appointed to act, until further orders, as Subordinate Judge, Rangpur, *vice* Babu Sasi Bhushan Chaudhuri, appointed to act as Additional District and Sessions Judge, Dacca and Mymensingh, and is vested with the powers of a Judge of a Court of Small Causes for the trial of suits cognizable by such a Court up to the value of Rs. 500, within the local limits of the Sadar Munsifi of Rangpur. He is also vested with the functions of a District Court, under section 26, sub-section (1) of Act VII of 1889, within the local limits of the district of Rangpur.

Jessore. Rangpur.

No. 1904A.D.—The 27th June 1905.—Babu Phanindra Lal Sen, M.A., B.L., is appointed to act as a Munsif in the district of Jessore, to be ordinarily stationed at Bagerhat, during the absence, on deputation, of Babu Kanty Chunder Mukerji, or until further orders.

Jessore.

POWERS.

No. 1765A.D.—The 21st June 1905.—Mr. D. C. Patterson, Assistant Magistrate, Sonthal Parganas, is vested with the powers of a Magistrate of the second class.

Sonthal Parganas.

No. 1767A.D.—The 21st June 1905.—Mr. Sarat Kumar Ghose, Assistant Magistrate Hooghly, is vested with the powers of a Magistrate of the second class.

Hooghly.

No. 1785A.D.—The 21st June 1905.—The officers named below are vested with the powers of a Magistrate of the second class:—

Mr. B. A. Collins,	Assistant Magistrate	...	... Sarun.
„ H. T. Cullis,	ditto	...	... Gaya.
„ C. L. Philip,	ditto	...	... Monghyr.
„ J. A. Woodhead,	ditto	...	... Mymensingh.
„ P. S. Shettle,	ditto	...	... Manbhum.
„ H. E. Spry,	ditto	...	... Muzaffarpur.

No. 1799A.D.—The 23rd June 1905.—Under the authority vested in him by section 357, sub-section (2), of the Code of Criminal Procedure, Act V of 1898, the Lieutenant-Governor empowers Babu Sasibhushan Satpathi, substantive *pro tempore* Deputy Magistrate, Cuttack, to take down evidence in criminal cases in the English language.

Cuttack.

No. 1801A.D.—The 23rd June 1905.—Babu Satis Chandra Mukherjee, Deputy Magistrate, Chittagong, is vested with the powers of a Magistrate of the second class.

Chittagong.

No. 1812A.D.—The 23rd June 1905.—Babu Kanti Bhushan Sen, Deputy Magistrate, Ranchi, is vested with powers under section 110 of the Code of Criminal Procedure.

Ranchi.

No. 1828A.D.—The 23rd June 1905.—Mr. J. C. Leighton, Officiating Joint-Magistrate, Dinapore, Patna, is vested with the power to try summarily the offences mentioned in section 260 of the Code of Criminal Procedure.

Patna.

No. 1835A.D.—The 24th June 1905.—Mr. J. A. Dawson, Assistant Magistrate, Patna, is vested with the powers of a Magistrate of the second class.

Patna.

No. 1870A.D.—The 27th June 1905.—In exercise of the power conferred by sub-section (1) of section 565 of the Code of Criminal Procedure, 1898, the Lieutenant-Governor is pleased to empower Babu Kanti Bhushan Sen, a Magistrate of the first class in the district of Ranchi, to order, at the time of passing sentence of imprisonment on any person referred to in that sub-section, that the residence or change of residence of such person after release shall be notified as provided by the rules made under sub-section (3) of the section.

Ranchi.

Babu Kanti Bhushan Sen is also vested with powers under sections 133, 143, 144 and 524 of the Code of Criminal Procedure.

No. 1886A.D.—The 27th June 1905.—Mr. C. T. Williams, Assistant Magistrate, Buxar, Shahabad, is vested with the powers of a Magistrate of the first class.

Shahabad.

No. 1902A.D.—The 27th June 1905.—Babu Bepin Behari Ghose, Munsif of Bagerhat, in the district of Jessore, is vested with the powers of a Judge of a Court of Small Causes for the trial of suits cognizable by such a Court up to the value of Rs. 100 and with the functions of a District Court, under section 26, sub-section (1), of Act VII of 1889, within the local limits of the Bagerhat Munsifi.

Jessore.

No. 1906A.D.—The 27th June 1905.—Mr. G. Milne, Officiating Joint Magistrate, who has, under the order of this date, been posted to the head-quarters station of the 24-Parganas district, is vested, under section 407 (2) of the Code of Criminal Procedure, with power to hear appeals from convictions by Magistrates of the second and third classes.

24-Parganas.

No. 1952A.D.—The 27th June 1905.—Babu Haripada Ghosh, Deputy Magistrate, who has, under the order of this date, been posted to the head-quarters station of the Hazaribagh district, is vested with the powers of a Magistrate of the second class.

Hazaribagh.

R. W. CARLYLE,
Offg. Chief Secy. to the Govt. of Bengal.

APPOINTMENTS AND TRANSFERS.

No. 2205J.D.—The 20th June 1905.—Babu Hari Das Ray Chaudhury is appointed to be an Honorary Magistrate [illegible] the district of the 24-Parganas.

24-Parganas.

No. 2272J.D.—The 22nd June 1905.—Babu Shiva Nandan Prosad Singh is re-appointed official visitor of the Monghyr Jail, with effect from [illegible] to be a member from the 14th July next.

Monghyr.

No. 2339J.D.—The 24th June 1905.—Babu Sivendra Kumar Chowdhuri is re-appointed to be an Honorary Magistrate of the Independent Bench at Sherpur in the district of Mymensingh.

Mymensingh.

No. [illegible]—The 24th June 1905.—Babu Annada Chandra Bhattacharjee is re-appointed to be an Honorary Magistrate of the Independent Bench at Kishorganj, in the district of Mymensingh.

M[illegible]h.

No. 2411J.D.—The 27th June 1905.—Chowdhuri Mohamed Ismail Khan is appointed to be an Honorary Magistrate of the Barisal Independent Bench, in the district of Backergunge.

Backergunge.

No. 2408J.D.—The 27th June 1905.—Babu Protap Chandra Mukerjee and Maulvi Obedul Gani are re-appointed to be Honorary Magistrates of the Barisal Independent Bench, in the district of Backegunge.

Backergunge.

POWERS.

No. 2206J.D.—The 20th June 1905.—Babu Hari Das Ray Chaudhury, who has been appointed to be an Honorary Magistrate of the Independent Bench at Baruipore, in the district of the 24-Parganas, is vested with the powers of a Magistrate of the 3rd class.

24-Parganas.

Under the authority vested in him by section 357, sub-section (2), of the Code of Criminal Procedure, Act V of 1898, the Lieutenant-Governor empowers Babu Hari Das Chaudhury to take down evidence in criminal cases in the English language.

Names.	Boundaries.	Names of villages included in jurisdiction.
Monohardi independent outpost (attached to Raipura, police-station).	This outpost is bounded on the— *North*, by villages Matkhola, Bairagirchur, Pootia, Kudiorchor, Batal, Ramdi, Adampur, Nayakandi, Katiadi, in Katiadi police-station (Mymensingh). *South*, by villages Chur Shindur, Chur Alinagar, in Kapasia police-station; by villages Sadarchur, Dattorgaon, Dhanua, Baruigaon, Noadia, Badabo, in Raipura police-station. *East*, by villages Kamraboo, Amlaboo, Belaboo, in Raipura police-station; by villages Faridpur, Napitarchur, Singua, Damra khandia, Birkasimnagar, Lakshipura, Gabra, Perojpur, in Bajitpur police-station (Mymensingh). *West*, by villages Aralia, Pachoca, Barajapur, Barishaboo, Bagua, Singua, Khirati, Sonmania, Dakshingaon, Aral, Mamoordi, Dhondia, in Kapasia, police-station.	(1) Arjun Char, (2) Ahmoodpur, (3) Ashatnagore, (4) Aulipara, (5) Atkapara, (6) Aulikandi, (7) Atushal, (8) Aganagore, (9) Alinagore, (10) Ujan Char, (11) Uralia, (12) Utter Patooli, (13) Utter Dhur, (14) Utter Bangalgaon, (15) Utter Ulgi, (16) Ekduaria, (17) Krishanapoor, (18) Kazir Char, (19) Kashba, (20) Kalidaha Kola, (21) Kahetergaon, (22) Kana-tek, (23) Kandapara, (24) Kolapara, (25) Kachikata, (26) Kaliakuri, (27) Kataboira, (28) Kutubdi, (29) Koch Char, (30) Kuripaika, (31) Kamar Algi, (32) Krittibashdi, (33) Keraninagore, (34) Kazir Char, (35) Khaliabaid, (36) Khutmara, (37) Kharabon, (38) Khilua, (39) Khanjonhat, (40) Khashkanda, (41) Khurd Moheshardi, (42) Gangulkandi, (43) Gabtoli, (44) Gangaramkandi, (45) Goaribhanga, (46) Galgalia, (47) Gotashia, (48) Gurma kanda, (49) Govindapoor, (50) Gondardia, (51) Gugula, (52) Garbari, (53) Chandibardi, (54) Ghoshgaon, (55) Moheshurdi, (56) Nandigaon, (57) Chowk Mahamadpoor, (58) Char Tatirdi, (59) Char Baghna, (60) Char Gazaria, (61) Chandanpoor, (62) Chengain, (63) Char Sagardi, (64) Char Mahamudpoor, (65) Char Mandalia, (66) Char Goailbari, (67) Chalak Char, (68) Chander kandi, (69) Char Jamalpoor, (70) Char Gulmahamud, (71) Char Kaonia, (72) Char Bagher, (73) Char Kashimnagore, (74) Char Syat, (75) Char Krishnapoora, (76) Chakam Khola, (77) Chandipoora, (78) Chital, (79) Chandanpoor, (80) Chetri, (81) Chula, (82) Chandandia, (83) Char Chandandia, (84) Char Narandi, (85) Chowk Bhanda, (86) Chandal Band, (87) Chikadi, (88) Char Daulatpoor, (89) Chhalma, (90) Jibkai, (91) Jamtola, (92) Jugardia, (93) Jhalakandi, (94) Tuiner Tek, (95) Tangir Tek, (96) Thenker kandi, (97) Damanmara, (98) Doigaon, (99) Tatirdi, (100) Tara kandi, (101) Tamak kanda, (102) Tanta kanda, (103) Teli Kanda, (104) Taltala kandi, (105) Tatipara, (106) Taltola, (107) Dairerpar, (108) Dighirpar, (109) Dakhindhur, (110) Daribabla, (111) Daribabla (2), (112) Dapania, (113) Dakshinpara, (114) Dairadi, (115) Dashdona, (116) Dighakandi, (117) Durbbakandi, (118) Darbesherkandi, (119) Dulalpoor, (120) Daripara, (121) Daulatpoor, (122) Dhonbhanga, (123) Dhorastek, (124) Dhulunda, (125) Narendrapoor, (126) Nowakanda, (127) Nalua, (128) Noyapara, (129) Noyanagore, (130) Nagarnaluakot, (131) Nagteki, (132) Nowabaid, (133) Narandi, (134) Noadhair, (135) Nager noaidha, (136) Nischintapoor, (137) Nandirgaon, (138) Nagarmoheswardi, (139) Pirpoor, (140) Paratola, (141) Paikan, (142) Paradia, (143) Patali, (144) Paterkandi, (145) Paschimkur, (146) Panchkandi, (147) Pantamehal, (148) Para Bandhani, (149) Paratola, (150) Kutaria, (151) Baghber, (152) Birgaon, (153) Balla, (154) Balla Tarakandi, (155) Barchapa, (156) Bamnergaon, (157) Binnabaid, (158) Bangalgaon, (159) Rajnaban, (160) Baroibari, (161) Birbagber, (162) Bamanhata, (163) Bagibari, (164) Boradia, (165) Bandabari, (166) Baraidia, (167) Bamnerbhita, (168) Baghber, (169) Bogadi, (170) Bogadi(2), (171) Baobhanda, (172) Bamnikanda, (173) Balupara, (174) Baoniakanda, (175) Binani, (176) Beelbinadi, (177) Bejerkandi, (178) Boirakhola, (179) Bhorashan, (180) Bhoradia, (181) Bhikkhodi, (182) Bhabla, (183) Bhandardia, (184) Bhitibiladi, (185) Moheshkandi, (186) Montola, (187) Miraban, (188) Majdia, (189) Mahamudpoor tek, (190) Madhuar tek, (191) Madhushal, (192) Mirzapoor, (193) Moheswardi, (194) Manoherdi, (195) Mirzanagore, (196) Masimpoor, (197) Mandaldia, (198) Modhyanagore, (199) Manikdi, (200) Roy's para, (201) Rampoor, (202) Rupey's kandi, (203) Rajarampoor, (204) Roy's gaon, (205) Rammohon's tek, (206) Rajballav's kandi, (207) Rudradi, (208) Ramchandradi, (209) Rasoolpoor, (210) Lemutola, (211) Lakhpoor, (212) Lengti Ahmedpoor, (213) Latifpoor, (214) Lohazuri, (215) Lama Gotashia, (216) Lakshmipoora, (217) Lama Manikdi, (218) Lakhpoor, (219) Madhabpur, (220) Shekhergaon, (221) Shovarampoor, (222) Shonakhoora, (223) Shekher tek, (224) Shinger kandi, (225) Shallabad, (226) Shari kandi, (227) Shukandi, (228) Shaplapanch kandi, (229) Syudpoor, (230) Sharbbalakshana, (231)

Names.	Boundaries.	Names of villages included in jurisdiction.
		Shabhardia, (232) Syedergaon, (233) Shimulia, (234) Hasikhan's Char, (235) Habizpoor, (236) Habishpoor, (237) Harisangan, (238) Harish Char, (239) Harardea, (240) Hatimdia, (241) Hitashi, (242) Hatirdia, (243) Harinarainpoor, (244) Harankhala.
jabari independent outpost attached to Munshiganj police-station).	*North*, by villages—Bhashanchar, Raripara, Dapsa, Anandopur, Pura, Kandorbari, Bogashar, Chowshor, Gurur-gaon, Noadda, Bidail, Shao-gaon, Bhorakoir, Dhaida, in Munshiganj police station; Ranadia, Duali, Dhankunia, in Srinagar police-station. *South*, by village Padma, in Palong police-station, and Shibchor police-station (Farid-pur). *East*, by portion of river Meghna, in Munshiganj police-station (Dacca) and Tippera. *West*, by portion of river Padma, in Faridpur district, and by villages Akiadhal, Taratea, in Srinagor police-station.	(1) Atigaon, (2) Atong, (3) Akalmegh, (4) Ashalia Char, (5) Ekabbar Sardar's kandi, (6) Kaitahati, (7) Krishnapoora, (8) Kalatali, (9) Kaoniakandi, (10) Kagashar, (11) Kamarkandi, (12) Kamar-kandi (2), (13) Karimgunge, (14) Kalikal, (15) Kachor Char, (16) Kasikandi, (17) Kalipoora, (18) Kham Hashara, (19) Khamarpar, (20) Khashkandi, (21) Gurairpar, (22) Guiashar, (23) Gungaon, (24) Gowpara, (25) Gangaon Char, (26) Char Gurkati, (27) Char Chairmandal, (28) Char Rehai, (29) Char Krishanapoor, (30) Choudhuri Char, (31) Chakam Khola, (32) Char Pashthubi, (33) Chachurtola, (34) Chagidhai, (35) Chairani, (36) Choudda-hazari, (37) Char Burkati, (38) Churamonikandi, (39) Charuto-padar's kandi, (40) Char Rajapoor, (41) Char Monjoor, (42) Chhota Lakshmipoora, (43) Serangarbari, (44) Syadpoor, (45) Jugirbagh, (46) Jahazmara, (47) Jhau Char, (48) Toom Char, (49) Deoreer Char, (50) Telirbagh, (51) Darojapar, (52) Dighirpar, (53) Datora, (54) Doghali, (55) Deosharerpar, (56) Dulukair, (57) Dasherkandi, (58) Dewankandi, (59) Noyakandi, (60) Nagarbari, (61) Noya-baherak, (62) Noyamoty, (63) Noadda, (64) Nagra, (65) Nagarjoar, (66) Nakkata, (67) Noyakandi, (68) Nowparakapurishar, (69) Dhalchatra, (70) Dharmogunge, (71) Par Belua, (72) Pashim Baherak, (73) Pooran Dighirpar, (74) Poorba Baherak, (75) Panchashar, (76) Pachankhola, (77) Pakira, (78) Pachuli, (79) Pairar Char, (80) Pooranmoodirkandi, (81) Pakira Char, (82) Pooran Sardar's Kandi, (83) Beherpara, (84) Burujbari, (85) Belua, (86) Bashgram, (87) Boyratoli, (88) Bohurposhail, (89) Bohur chanditola, (90) Bohur noyakandi, (91) Bohur sardarpara, (92) Bandeygaon, (93) Baghaeerpar, (94) Banori, (95) Bidgaon (96) Bahar sohaddi, (97) Boydar Char, (98) Bainaeel, (99) Bailar Char, (100) Bara baghadi, (101) Bakshi Kandi, (102) Bolashia, (103) Bolashia Khash kandi, (104) Dakshin Bolashia, (105) Bashgari, (106) Chhota Baghadi, (107) Majhir Char, (108) Mailkahar, (109) Matibhanga, (110) Mitara, (111) Mandra, (112) Moinarpar, (113) Morichadi, (114) Mandartoli, (115) Matha-bhanga, (116) Majhi Kandi, (117) Molla Kandi, (118) Morispatty, (119) Bhutar Char, (120) Rajabari, (121) Raghurampoor, (122) Bagherkandi, (123) Rakhir Char, (124) Shibsen, (125) Chatak, (126) Sarisaban, (127) Silparan, (128) Soulparan, (129) Sohagdhal, (130) Sardarkandi, (131) Siloe, (132) Siloe Char, (133) Satani, (134) Somaidhali's Kandi, (135) Harkara Chatak, (136) Hashaill
heor outpost (subordinate to Shealo police-station).	This outpost is bounded on the— *North*, by village Sanka, Manikganj police-station, and villages Beltail, Bari-gram, Bethugram, Kodalia, Singdair, Koshinora, Jalalia, Dhalthaba, Gong Behali, Chasa Bhadra, Bade-Behali, Nagorpur out-post (Mymen-sing). *South* by villages Fulora, Ramkantapur, Kethapara, Kohitora, Shibpur, Dotara, Radhakantapur, Kalachand pur, Kaimtora, Baona, Kushanda, Chur Kushanda, Sorokghata, Mirzapur, Asha-pur, Nindapara, Char Naba-gram, Chakbasta, Nakibbari, Moizkhara, in Shealo police-station, and villages Daotia,	(1) Gheor, (2) Koratia, (3) Mahamudpoor, (4) Char Gheor, (5) Moilagi, (6) Char Moilagi, (7) Boilat, (8) Batarakandi, (9) Kushtia, (10) Kukurtara, (11) Krishnapoora, (12) Kuthi-Bogulia, (13) Kuthi Kathapara, (14) Rasulpoor, (15) Ramkantha, poor, (16) Pola, (17) Bailjoori, (18) Char Boiljoori, (19) Shali, kertek, (20) Sridhargunge, (21) Bagoon Narohi, (22) Sridhar-nagore, (23) Bahadurpoor, (24) Terasree, (25) Dhangauri (26) Bha-toronda, (27) Bororia, (18) Borobila, (29) Basudevbari, (30) Joka, (31) Baitta, (32) Mandasta, (33) Joypoor, (34) Mahamudpoor, (35) Kusthia, (36) Kanda Kusthia, (37) Gangadharpatty, (38) Bongolla, (39) Nalkuria, (40) Nandarbandha, (41) Krishnapoora, (42) Shingjury, (43) Char Shingjury, (44) Bir Shingjury, (45) Gon Singjury, (46) Deobhog, (47) Shujabad, (48) Kashimpoor, (49) Kamarjageer, (50) Rahandi, (51) Lakshmidia, (52) Kakrakhi, (Kakraid), (53) Khailshindoor, (54) Dhamsar, (55) Miton, (56) Tulanda, (57) Boultali, (58) Natuabari, (59) Raipoora, (60) Keralinagore, (61) Beradanga, (62) Brahmongaon, (63) Krishna-nagore, (64) Deviteghary, (65) Shiharpoor, (66) Danga, (67) Shimolia, (68) Atghoria, (69) Shaliabari, (70) Kapshail, (71) Boshinara, (72) Hatoria, (73) Birkakali, (74) Mirkootia, (75) Ghuniajani, (76) Bainnar Bhita, (77) Hatkura, (78) Nirali, (79)

Names.	Boundaries.	Names of villages included in jurisdiction.
	Char Dooli, in Manikganj police-station *East* by villages Daoli, Nayapara, Goalpara, Sagardighi, Pachutia, Aynapur, Akshi, Dhulat, Gopalpur, Boraid Raj Dhupoti, in Manikganj police-station. *West* by villages Shoiltagazi, Gotabagh, in Nagorpur outpost (Mymensingh), and villages, Naitara, Abudanga, Kalikabari, Bisunpur, Masthul, Begoon Narchi, Narchi, Solakuria, Thakurkandi, Hezalia, in Shealo police-station.	Bairagi, (80) Beelpouli, (81) Mukhneja, (82) Korichora, (83) Baikanthapur, (84) Beelnalai, (85) Char Lakibbari, (86) Char Maijkhara, (87) Khagrihata, (88) Bagdipara, (89) Uthali, (90) Balirbadha, (91) Khasherbadha, (92) Kakna, (93) Andhibari, (94) Tutium, (95) Koila, (96) Ghariala, (97) Natuabari, (98) Fazilabari, (99) Shimolia, (100) Baitara, (101) Ultabari, (102) Bhatabari, (103) Kajalkuthi, (104) Beel Kalidaha, (105) Wooyail, (106) Beki Wooyail, (107) Mir Hatail, (108) Khalishadahara, (109) Chauk Madhupoor, (110) Joptola, (111) Hatail, (112) Madhupoor, (113) Kakraid, (114) Raghukachi, (115) Rathura, (116) Teghori, (117) Debogram, (118) Rajair, (119) Gala, (120) Tepsi, (121) Joypoor, (122) Taluk Hapania, (123) Gorjona, (124) Atiawoolail, (125) Ahulia, (126) Salimpoor, (127) Chaudprotap Woolail, (128) Panchthubi, (129) Bhabanipoor, (130) Gararia, (131) Bowra, (132) Mukundabari, (133) Nilua, (134) Jafar Ujial, (135) Poragacha, (136) Chandrakhola, (137) Juginda, (138) Gazi Ichhail, (139) Bowrabari, (140) Yarpoor, (141) Char Mostool, (142) Baniaghona, (143) Shampoor, (144) Hatkora, (145) Pongti Iacha, (146) Jointa, (147) Somedpoor, (148) Ramchandrapoor, (149) Chawk Hari Charan, (150) Mulkandi, (151) Mirpoor, (152) Daulatpoor, (153) Ambaria, (154) Shoar Kandi (Kadamtola), 155) Ramrairbadha.
Kaliakoir outpost (subordinate to Savar police-station. These villages are attached to Kaliakoir outpost which is subordinate to Savar police-station).	This outpost is bounded on the— *North*, by villages Palashtoli, Kuripara, Komarpara. Chaplapura, Agjana. Tetila, Kushairchala. Kaharta, Borabaha, Jowdarhata, in Mirzapur outpost (Mymensingh); village Kalmegha, in Gafforgaon. police-station (Mymensingh), and villages Hashikhali, Belchara, Shirishgori, Shingordighi, Badin-Bhaiya, Mowoa, in Kapasia police-station. *South*, by villages Nallabhalla, Naihati, Kholabari, Chandiswar, Patal, Baimu, Radhanagar, Kushora, Gabrail, Nowagowkathalia, Koolipara, Charkathalia, in Savar police-station; villages Baitala, Basat, Mukdumpur, Kandorppapur, Radhanagar, Shaturia, Kownora, Bhotora, Baliati, in Manikganj police-station. *East*, by villages Bharamtoli, Purujali, Naudapur, Panishall, Mirjapur, Taltoli, Borta, Karkhana, Shaldah, and Turij river in Keraniganj police-station; villages Joyertick, Barabat, Baigha, Konchakori, Bamanbag, Kalaboid, Lohakoir, Madhabpur, Kabirpur, Monglor tecki, Baidgaon, Gazibori, in Savar police-station. *West*, by villages, Gorjana, in Manickganj police-station; villages Monora, Bilsha, Rothura, Agrail in Nagarpur (Mymensingh); villages Pachrukhi, Koila, Fulbaria,	(1) Ataban, (2) Andharmanik, (3) Amgachiachala, (4) Asharibari, (5) Aghaid, (6) Outpara, (7) Amdair, (8) Ashapoor, (9) Adaban, (10) Anailbari, (11) Araipara, (12) Amta, (13) Agjethail, (14) Ashalai, (15) Amtali, (16) Amgachiachala, (17) Amrail, (18) Atigaon, (19) Agbashkota. (20) Amshimoeer, (21) Ahulia Polashtoli, (22) Indora (Noya, char), (23) Utter Rowail, (24) Ultapara, (25) Utter Bandalia, (26) Uthali, (27) Utter Hijaltoli, (28) Kanchharpara, (29) Kamaria, (30) Kanchanpoor, (31) Kapashia Chala, (32) Kotbari, (33) Kaotamari. (34) Kanchanpoor, (35) Kunda Ghata, (36) Kulupara, (37) Kutubdia (38) Kanainagore, (39) Kacharash, 40) Kandapara (41) Karnakhola, (42) Keshabpoor, (43) Kacharajapoor, (44) Kashimnagore, (45) Kamarpara, (46) Karai Chala, (47) Kalmegha, (48) Kambalpara, (49) Kookila Chala, (50) Kondabaid, (51) Kak Chala, (52) Kukur Chala, (53) Kapashia Chala, (54) Kumarhati, (55) Kumarpara, (56) Kumar Chala, (57) Kamar Chala, (58) Kathaltali, (59) Kumudpoor, (60) Karatipara, (61) Kanchanpoor, (62) Karatipara, (63) Kathaltali, (64) Kuraliateki, (65) Kaliakoir, (66) Kholapara, (67) Kholartek, (68) Khalpar Kooloopara, (69) Shekpara, (70) Khetachora, (71) Kalishajani, (72) Khagail, (73) Khagatia, (74) Goshatra, (75) Goal Chala, (76) Goshaibari, (77) Govindapoor, (78) Ganak Chala, (79) Goramara, (80) Gabtoli, (81) Gorjankhali, (82) Gobindapoor, (83) Golachipa, (84) Gopalnagore, (85) Goal Chala, (86) Goalbaid, (87) Golaia, (88) Gachbari, (89) Gobra, (90) Garoorgaon, (91) Garakul, (92) Gowtara, (93) Galachipa, (94) Noyapara, (95) Gozaria, (96) Gabtali, (97) Goal Chala (98) Gaothori, (99) Goalbathan, (100) Char Chowhat, (101) Chandara, (102) Chatalbhita, (103) Chatal Nowapara, (104) Chandanteki, (105) Chandar Chala, (106) Chapaeer, (107) Chawhart, (108) Chamitia, (109) Chawhartar, (110) Chandralia, (111) Chinael, (112) Chandetalla, (113) Char Bhatara, (114) Chandranathpoor, (115) Chapaira, (116) Chuni Dhetura, (117) Chandpoor, (118) Chandkhan, (119) Chandpoor, (120) Chakoriapara, (121) Shinaban, (122) Chhotabhakulia, (123) Shailakhali, (124) Chhanteki, (125) Saidpoor, (126) Jangaliapara, (127) Jalsooka, (128) Jalsooka, (129) Jolabari, (130) Janer Chala, (131) Jalooahati, (132) Jagatnagore, (133) Jangalia, (134) Janpar, (135) Jadabpoor, (136) Jaluavita, (137) Jamalpoor, (138) Jolapara, (139) Jhikutia, (140) Jhingahati, (141) Totail, (142) Tansutrapoor, (143) Tekipara, (114) Tanabau, (145) Tekibari (146) Tan Kaliakoir, (147) Tanglabari, (148) Tekibari, (149) Thakur Chala, (150) Thengarband, (151) Thakurpara, (152) Dakoorail, (153) Dubail, (154) Dakaitmara, (155) Dhuligora,

Names.	Bounderies.	Names of villages included in jurisdiction.
	Mamudpur, Anaitara, Bhatgaon, Singjury, Ashtamunushya, Gonggow, Bhowra, in Mirzapur outpost (Mymensingh); villages Dhantara, Jamerabari, Golakanda, Bowtia, Chandipur, Boisakanda, Horidaspur, Kantali, in Savar police-station, and villages Bimudhantora, Bhuirail, Alapsing, Amrail, Kholabori, Ghonggow, Bhowra, Malshun, Gobra, Geromora, Digholia, Bhorail, Kothora, Betroshi, Chandala, Babaria, Goalbari, Pathora, Bankhartola, Kumarjani, Nischintapur, Bainachala, Kalimora, Bisherchala, Ronarchala, Halidochala, Syadpur, in Mirzapur outpost (Mymensin[illegible]).	(156) Dholsamudra, (157) Dhaljara, (158) Dholigora, (159) Noyapara, (160) Nischintapoor, (161) Namasolai, (162) Niloja, (163) Noya Char, (164) Nischindahati, (165) Nagorebari, (166) Nandeswari, (167) Noyapara, (168) Nityanandapoor, (169) Norsingpoor, (170) Noya Char, (171) Noya Char (Maniknagore), (172) Nobirbhower, (173) Nowla, (174) Nolua, (175) Noyapara, (176) Nandi Chala, (177) Noya Char, (178) Nak Chala, (179) Noyapara, (180) Noyanagore, (181) Tora Chala, (182) Teligram, (183) Taltola, (184) Talgachhia Chala, (185) Tetalia Chala, (186) Dabaria, (187) Dabaria (Pakulla), (188) Daopatia, (189) Dimukha, (190) Dighibari, (191) Duanipara, (192) Dewair, (193) Dakshin Bandhabari, (194) Dunigram, (195) Delutia, (196) Dunipara, 197) Dariapoor, (198) Dopa Srifaltoli, (199) Dhopa Chala, (200) Dhoparpara, (201) Pakulla, (202) Paikpara, (203) Pathaliapara, (204) Paikpara, (205) Paragaon, (206) Pachrukhi, (207) Purba Chandara, (208) Pakurtali, (209) Pakora-l, (210) Patrabari, (211) Poratengar, (212) Paragaon, (213) Pabrail, (214) Padmapara, (215) Pugaban, (216) Peeprachit, (217) Nikla, (218) Paporia Chala, (219) Panchash, (220) Pachboran khola, (221) Purerbagh, (222) Pirer teki, (223) Polashtoli, (224) Fakirchola, (225) Fatehpoor, (226) Fulbaria, (227) Fakir Chala, (228) Fazullapur, (229) Bamandha, (230) Baghori, (231) Belaban, (232) Ramanbohan, (233) Baraipara, (234) Baroichhuta, (235) Beshair, (236) Bandabari, (237) Baina Chala, (238) Bor Chala, (239) Bathania Chala, (240) Brindaban Chala, (241) Bulbaria, (242) Boraibari, (243) Bagchaser, (244) Bangolla, (245) Bordhanpoor, (246) Barinda, (247) Bangori. (48) Baharpara, (249) Bhula, (250) Biswaspara, (251) Bashtoli, (252) Bagambar, (253) Baraid, (254) Badurpoor, (255) Begunbari, (256) Bashura, (257) Benoopur, (258, Bagdipara, (259) Brojona gore, (260) Bowkhanda, (261) Bulbaria, (262) Bara Jethal, (263) Bara Bhakulia, (264) Baichail, (265) Bagjan, (266) Balia (Teki Balia), (267) Bashakar, (268) Bartali, (269) Bajail, (270) Bajar Chala, (271) Boali, (272) Bor Chala, (273 Boheratoli, (274) Bactheejori, (275) Bownapara, (276) Bawangaon, (277) Bari Chala, (278) Basta, (279) Baboria Chala, (280) Botgachhia Chala, (281) Begumpur, (282) Bannara, (283) Borbaria, (248) Bamondah, (285) Bashtoli, (286) Bontaki, (287) Baraitali, (288) Bazeh Hijaltoli, (289) Burirpara, (290) Bailadi, (291) Mathajuri, (292) Montala, (293) Madankhali, 294) Maitha Chala, (295) Madhyapara, (296) Muradpoor, (297) Majhupara, (298) Majukhan, (299) Miabari, (300) Radhanagore, (301) Rasulpoor, (302) Rajapoor, (303) Rangamatia, (304) Radhanagore, (305) Ratnabon, (306) Rampoor, (307) Ramchandrapoor, (308) Raghoonathpoor, (309) Ramchandrapoor, (310) Rangamati, (311) Rajabari (312) Rashidpoor (313) Laskar Chala, (314) Bairaban, (315) Bardal, (316) Bhomarteki, (317) Bhitabari, (318) Bhataria, (319) Bhalukhor, (320) Bhabanhati, (321) Bheri Chala, (322) Bhowman, (323) Bhanurteki, (324) Bhingraj, (325) Bhangabari, (326) Bhakulia, (327) Mukraban, (328) Mathalia, (329) Motar Chala, (330) Minarbahar, (331) Medi Ashalia, (332) Mohimpoor, (333) Medila, (334) Moodipara, (335) Monnir Char, (336) Majhipara, (337) Madarpur Sutrapoon, (338) Latibpoor, (339) Shindoori, (340) Shonadia, (341) Sharatoli, (342) Shawnagore, (343) Shabajpoor, (344) Shakshipoor, (345) Shaforta, (346) Shundhitara, (347) Shibpoor, (348) Shahapara, (349) Shuri Chala, (350) Shairabaj, (351) Sholabati, (352) Shajandhora, (353) Shadullapoor, (354) Shashon, (355) Shundar Kathalia, (356) Shaldapara, (357) Sholanga, (358) Shimulia, (359) Shirajpoor, (360) Shiris Chala, (361) Shikdar Chala, (362) Shimdia Chala, (363) Shonatala (Kandan Kuri), (364) Sripoor, (365) Sasadharpatty, (366) Shin Chala, (367) Shailakhali, (368) Shijaban, (369) Shuk Chala, (370) Shakashar, (371) Sutrapoor, (372) Shimoiltali, (373) Sutrapoor Chandpoor, (374) Srifaltoli, (375) Saidpoor, (376) Shimoiltali (377) Harabari, (378) Hazalhati, (379) Hartakitolla, (380) Harina Chala, (381) Harinahaty, (382) Hatoria Chala, (383) Halooapara, (384) Hizaltoly, (385) Hat Kaliakoir (386) Harinahaty.
	Inde[illegible] out[illegible]eria[illegible]).	

No. 2355 J.D.—The 24th June 1905.—Under section 4 (*l*), clause (*s*) of the Code of Criminal Procedure, Act V of 1898, the Lieutenant-Governor declares the undermentioned Police Outposts in the District of Howrah to be police-stations for the local areas specified : —

NAMES.	Boundaries.	Names of villages included in jurisdiction.
1. Santragachi outpost (Domjoor police-station).	The outpost is bounded on the *north* by villages Tetulkuli and Pakhere of Doomjoor police-station, and Eksara, Kooledanga, Khalia, Kona, Biradanga, and Uttar Bantra of Lillooah police-station; on the *east* by villages Dakhin Bantra (part) of Howrah police-station, and Santragachi (part) and Battore of Shibpur police-station; on the *south* by villages Dooley, Panchpara, Podra, Chandbati (part), Tnanamekea, and Majerhat of Sankrail Independent outpost; and on the *west* by villages Bankra, Munshadanga, Nibrey, Prasastha, and Maheary of Domjoor police-station.	Shatashi, Dharsha, Baltikoree, Kasipur, Senpur, Dakhin Bantra (part), Ichapur, Santragachi (part), Nabaji Oonsooni, Pooiley, Gohalbati, Chandbati (part), Sultanpur, Dakhin Baksarah, Uttar Baksarah, Habilpur, Jagacha, Jigacha, Mankhali, and Garba. ((Total number of villages=21.)
2. Sankrail Independent outpost (Domjoor police-station).	The outpost is bounded on the *north* by villages Dakhin, Baksarah, Sultanpur, and Chandbati of Santragachi outpost, and Pnili, Mohiary, Ban Napara, Sakardaha, and Korola of Domjoor police-station; on the *east* by the Hooghly river; on the *south* by villages Bowria and Burikhali of Bowriah Independent outpost; on the *west* by villages Hakola, Panchla, Kushodanga, Ranihati, Panihezli, Jayrampur, and Arkai of Panchla Independent outpost and Baulkhali and Santoshpur of Bowriah Independent outpost.	Andul, Abada, Alampur, Mirzapur, [illegible]argore, Kamdebpur, Gar Mirzapur, Gar Maniakhali, [illegible]ia Jorehat, Banupur, Manikpur, Mashilla, Ramchar, [illegible]apur, Rajarampur, Sankrail, Singimara, Halisahar, Kulabapoba, Jangalpur, Ula, Kanyamunee, Kodati, Kulai, Khaskhamar, Khosjapur, Gandharbapur, Garbanga, [illegible]sudebpur, Ghoraghat, Chak Sikrita, Chakali, Chak M[illegible]hu, Chak Belduli, Tulsighatta, Dadpur, Damsia, Nu[illegible]Kur, Betara, Dahula, Beldubi, Belkolar, Baidyapur, Bha[illegible]nandapur, Monoharpur, Sarenga, Sahapur, Hirapur, [illegible]kabbarpur, Kazirat, Kundua, Gohalbati, Jaynagar, Jotara Kendua, Dhulagori, Nabaghara, Paniarah, Bikichara, Molihar Chara, Mohisgota, Shooltee, Hatisala, Sandhipur, Kamranga, Chandbati, Goharia, Don Mohiari, Dulleya, Nazirganj, Panchpara, Podra, Basudebpur, Mekua, Rajganj, Radhadasi and Hatgacha.
3. Panchla Independant outpost. (Juggatbullabpur police-station.)	The outpost is bounded on the *north* by villages South Maju, Machhal Jagarampur, Shial Danga, and Boiraj of Juggatbullabpur police-station, and Khasmayra, Odpur, Natifpur and Korala of Domjore palice-station; on the *east* by villages Dhamsa, Beldoobiy and Belculie of Sankrail Independent Outpost, Talmoora of Uluberia police-station and Dhulagore, Shulooty, Jainagar, Paniarah, Nabghara and Kulai of Sankrail Independent outpost; on the *south* by villages Basudebpur, Soonrikhally, Ramnagar, Basudebchak Tewot and Kamla chak of Uluberia police-station; on the *west* by villages Janzalichak, Bhandergacha, Panpur and Ramchandrapur of Amta police-station.	Panchla, Sank-khali, Gazgiry, Gab-be[illegible]ria, Hankola, Ranihaty, Chamardangy, Ayma chak, Daskhin Panchla, Charrabipharghatta, Tentoolberiah, Ramgarha Dhoonky, Melay, Uloonut, West Panchla, Basudevchak, [illegible]Banharishpur, Chak Makhal, Kumarchak, Nowachak Sa[illegible]nanty, Kalagachi, Biswanathpur, Yayarchak, Karany[illegible]hak, Darogachak, Syamchak, Fakirpara, Juversha, Hari[illegible]dabar Tollapatra, Dewli Dewlpur, pargana Dewlpur, Joyrampur, Balarampur, Kusadanga, Jalalshee, Aokabberpur, Kanaidanga, Gandalpara, Gangadharpur, Pani [illegible]isly, Shyamchak, Govindopur, Naskarpur, Naldah, Fatiokg[illegible]achee, Sidhe[illegible], Sanchaty, Bantan, Jote Sabharam, Jotek[illegible]haira Polcustay, Esmalpur, Julalsheekhas, Majukhetra, Ma[illegible]kalhaty, Mallick pur, Kaggachee, Dipa, Gauripur.

NAMES.	Boundaries.	Names of villages included in jurisdiction.
4. Mandalghat outpost (Shampur police-station).	The outpost is bounded on the *north* by villages Kesubpur, Hariharpur, Sheora and Halinan of Bagnan police-station; on the *east* by villages Tazunagar, Bhatughor Pipulnan, Gabberia, Kamargar, Joka, Argoni Shajangachi, Ganespur, Nimdari, Nonadangi, Radhanagar, Mamudpur and Parbapara of Shampur police-station; on the *south* by villages *Bordabar*, Panshila and Amberia of Shampur police station; on the *west* by the Rupnarayan River.	Anantapur, Laheripara, Adhilapara, Jhumjhumi *alias* Sahaberia, Mukundapur, Bhardajpur, Monohorpur, Basudebpur, Gaurangapur, Shashatsi, Sahandapur, Chandpur, Bar Sasan, Samaspure Osmanpur, Adulapara, Baikanthapur, *Dhudhurti*, Heria, Somulberia, Gajia, Deorah, Nahala, Santoshnagar, Choulia, Gupinathpur, Pakuriah *alias* Purasattampur, Kupnandan, Saibemia, Chaitannapur, Jagadispur Khajnabola, Mosha, Katagachi, Salukpara, Rangrah, Malipur, Pratappur, Paikar, Damodarpur, Telibunan, Shahapur, Karangiberia, Chapaban, Ganeshpur, Kalikapur, Jaliaberia, Beniapukur, Bilghore, Amchota, Kataldaha, Rautarah, Balkaria, Kultikri, Nandanpur, Semulia, Mamurchi, Krishnagar, Bhagabatipur, Baseri, Tripurapur, Sadashibpur, Khajri Kaunia, Boichi, Soko Mahabatpur, Urdhabpur Parasurampur, Sultanpur Ramnagar, Ajodhya Chaltapara, Moulberia Belpukur, Kantapukur, Paltabera, Narikeldaha, Dehi Mandolghat, Rameswarpur, Dhudhurti, Atebellai-Nasola, Nowl-Khorade, Kanpur, Khais, Danpaitay, Nakulan, Palgariah, Bania-Brindabunpur, Mohanpur-Rana.
Bouriah Independent outpost (Uluberia police-station).	The outpost is bounded on the *north* by villages Chak Madhu, and Khas Khamar of Sankrail Independent outpost; on the *east* by the Hooghly river; on the *south* by the villages Chengel, Khalain and Sijberia of Uluberia thana; on the *west* by villages Dasbagar, Ghosal Chak, Raghudevpur and Basudebpur of Uluberia thana.	Bouriah, Fort Gloster, Chak Khasi, Westbouriah, Kazir Chara (Bowria char). Rameswarbati, Parmanand Chak, Santoshpur. Burikhali, Khyree, Chak Banokhan. Radhanagar, Rameswar Chak, Dariohak, Baulkhali Shiduria mal.
6. Singti Independent outpost (Amta police-station).	The outpost is bounded on the *north* by villages Katalpara, Parbhurs hat, and Shampur of Arambagh thana, district Hooghly, and villages Pantairee of Khanakul thana, district Hooghly; on the *east* by the Damoodar river; on the *south* by villages Handhara, Sheoraberia, and Ranjabar of Amta police-station; on the *west* by villages Mogrugree, Nabin Chak, Balai Chak, Chabbishpur, Dharashimul Panchpukur, Bandaipur Garberia, Dashpur, Ghal and Bailpur of Khanakul police-station, Hooghly district.	Abirampur, Arula Akna, Asanda, Argory, Ambagan, Ande Chak, Itarai, Udaynarainpur, Uttar Manoaree, Uttar Singti Kurchee, Kultikry, Kansona Kumar Chak, Kanupat Kalikapur, kismut Kanupat. Kumirmara, Kakarail, Khalatpur, Khorode Itarai, Gaja, Gumgore, Garbhabanipur, Gailabanda, Ghala, Ghaldibia, Chak Kola, Chak Gora, Chak Anulia, Chak Baharampur, Chand chak, Chitrasenpur, Jangalpora, Jagaldah, Jaynagore, Joka, Tokapur, Thakurani Chak, Debhursut Naya Chak, Nischindipur, Naranarayan Chak, Daskhin Rampur, Daskinsingli, Ditio Singti, Debipur, Daskhin Monshree, Pancheruk, Pearapur, Dalapati Chak, Por Hariharpur, Pratap Chak, Patorgory, Purpet, Binode Bati, Bayrakurchee, Baligram, Bali Chak, Bag, Kumirmora, Borda, Bidhi Chandrapur, Banagori, Bhoura, Bhobanipur, Munsuka, Raghunathpur, Raichak Rampur, Ramsaran Chak, Rajapur, Lalbonogori, Sultanpur, Sitapur, Sibpur, Sibanipur, Sonagachi, Santosh Chak, Sibnarayan Chak, Subal Chak, Detio Senpur, Sonatala, Sahora, Hosal Harbora Chak, Horal, Hiraram Chak, Harishpur, Khampur, Kumarpur.

No.

Camp[illegible] *The 24th June 1905.*—In exercise of the power conferred by sub-section (1) of section 565 of the Code of Criminal Procedure, 1898, the Lieutenant-Governor is pleased to empower the Revd. Andrew [illegible] Honorary Magistrate at Pukhuria, in the district of Manbhum, exercising the p[illegi]pen t[illegible] gistrate of the first class, to order, at the time of passing sentence of imprisonment [illegible] any person referred to in that sub-section, that the residence or change of residence to such person, after release, shall be notified as provided by the rules made under sub-s[illegible] the m[illegible]3) of the said section.

[illegible] officer

No. 2384J.D.—The 24th June 1905.—In exercise of the power vested in him by section 14, sub-section (1) of the Code of Criminal Procedure, 1898, the Lieutenant-Governor is pleased to confer upon each of the under-mentioned Presidents of panchayats in thana Kapasia, in the district of Dacca, the powers of a Magistrate under sections 64, 127 and 128 of the same Code, and to declare that the said powers may be exercised by the said officers within the limits of the Unions noted against their respective names.

Dacca.

2. The Lieutenant-Governor is further pleased to declare, in pursuance of sub-section (2) of the said section 14, that the said powers are conferred and may be exercised by each of the said officers for a period of three years only from the date of this notification :—

Thana Kapasia.

Name of President.	Name of Union.
Babu Amrita Lal Chanda	Char Sindur.
„ Prosanna Chandra Deb	Gazaria.
„ Purna Chandra Gupta	Jinardi.
Maulvi Abdul Kabir	Ghorasal.
Babu Bhoirab Chandra Dhar	Khodadia.
„ Kali Nath Sen	Deotola.
„ Ram Hari Baisya	Prolhadpur.
Maulvi Shah Nawaz Gazi	Jangalia.
Babu Mon Mohan Adhikari	Chandpur.
Munshi Wahed Bux Khan	Nargana.
Babu Hari Kumar De	Muktearpur.
„ Rajendra Narain Roy	Satkhamar.
Munshi Fazlar Rahman	Kaliganj.
Babu Pares Nath Nag Biswas	Baktarpur.
Maulvi Mahamad Idrish Mia	Dakhinbag.
Babu Gour Chandra Mazumdar	Koir.
The Revd. Father Lafond	Tumolia.

H. W. C CARNDUFF,
Offg. Secy. to the Govt. of Bengal.

PUBLIC WORKS DEPARTMENT.

ESTABLISHMENT.

The 27th June 1905.

No. 144.—With reference to Bengal Government Notification No. 19, dated 17th January 1905, the head-quarters of the Champaran Division are retransferred from Ramnagar to Motihari, with effect from the 1st June 1905.

No. 145.—The following corrigendum issued by the Government of India in the Department of Revenue and Agriculture (Civil Works) is republished for information, in continuation of Bengal Government Notification No. 122, dated the 30th May 1905 :—

No. 136, dated the 17th June 1905.

In the first column in Department of Revenue and Agriculture (Civil Works) Notification No. 129, dated 22nd May 1905, *for* Finnimore, B. K., wherever it occurs, *read* Gardiner, E. R.

No. 146.—The following notification issued by, the Governm[illegible] India in the Department of Revenue and Agriculture (Civil Works) is republished [illegible]pation :—

[illegible]na Dewipu[illegible]alshee, Ad[illegible]harpur, Pa[illegible]r, Naldah, [illegible]e Sabharam,

No. 140, dated the 23rd June 1905.

With reference to Public Works Department Notification No. 44[illegible], Majukhetra, Gauripur. December 1903, Mr. D. Parkes, Officiating Chief Engineer and Secretary [illegible] to Works Department to the Honourable the Chief Commissioner, Central Provi[illegible] manently transferred to that province, with effect from the 29th April 1905.

W.

Secy. to [illegible] ngal.

[Third Publication.]

The 13th June 1905

No. 17.—Notification.—In exercise of the powers conferred on him by sections 99 and 78 of Act III (B.C.) of 1876, the Hon'ble the Lieutenant-Governor of Bengal proposes to make the following alterations and additions in rules 5, 6, 9, 15, 47 and 48 of the Water-rate Rules for the Orissa Canals and in Appendices III and VIII thereto.

W. A. INGLIS,

Secy. to the Govt. of Bengal.

Existing rules.	*Proposed rules.*
5. The preliminary application for a lease for a term of years, either new or renewal, may be of an informal nature, but it must be in writing. It may be received either at the Subdivisional or Sectional Canal office: in the latter case, the Sectional Officer shall forward it immediately to the Subdivisional Canal Officer.	5. The preliminary application for a lease for a term of years, either new or renewal, may be of an informal nature, but it must be in writing. It may be presented at any time; but if presented after the 1st of April in the year during which the lease is to commence, an additional charge of 1 pice per *goont* of local measure, equivalent to 6 annas 3 pies per mán, will be made for the year following that in which the lease has been applied for. The Subdivisional Canal Officer shall, at a date not less than three months and not more than six months before the expiry of a lease for a term of years, send a notice in writing to the representative of the cultivators informing him of the fact. Such notice shall request that early intimation may be sent if it is desired to renew the lease, and shall draw attention to the extra charge which will be incurred if the application is presented after the 1st of April.
The Subdivisional Canal Officer as soon as he has, by personal enquiry or by an enquiry made by the Sectional Officer, satisfied himself that the land in question constitutes a definite block, and that it can be irrigated, shall at once inform the Divisional Canal Officer, giving such particulars as that officer may direct, and shall ask his formal approval to the lease being proceeded with. On receipt of such approval, he shall forward the preliminary application to the zilladar in order that the detailed assessment of the block may be taken in hand. A copy of the map alluded to in rule 4 shall be sent with the application, and this constitutes the basis of the assessment.	The preliminary application may be presented either at the Subdivisional or Sectional Canal office. The Subdivisional Canal Officer as soon as he has, by personal enquiry or by an enquiry made by the Sectional Officer, satisfied himself that the land in question constitutes a definite block, and that it can be irrigated, shall at once inform the Divisional Canal Officer, giving such particulars as that officer may direct, and shall ask his formal appoval to the lease being proceeded with. On receipt of such approval, he shall forward the preliminary application to the zilladar in order that the detailed assessment of the block may b taken in hand A copy of the map alluded to in rule4 shall be sent with the application, and this constitutes the basis of the assessment.
6. The zilladar on receipt of the application shall depute an amin to prepare the khasra or detailed assessment paper. This shall be done on the ground with the aid of the revenue survey map and khasra. Should the survey map and khasra not be available, the amin shall make a sketch map and shall measure the areas with a chain or measuring-rod.	6. The zilladar on receipt of the application shall depute an amin to prepare the khasra or detailed assessment paper. This shall be done on the ground with the aid of the revenue survey map and khasra. Should the survey map and khasra not be available, the amin shall make a sketch map and shall measure the areas with a chain or measuring-rod. The amin shall write out daily in the form provided for the purpose abstracts for each cultivator of the entries in the khasra relating to lands in his occupation and shall deliver such abstracts, to the representative for distribution.
9. Should it happen that the cultivators of the block proposed for lease are not unanimous, and that certain of them decline to sign the application, the zilladar shall report the matter to the Subdivisional Canal Officer. This officer shall hold a local enquiry,	9. On the 1st December of each year, or on any subsequent date, the Divisional Canal Officer may decline to proceed with a lease for a term of years the application for which has not been fully signed by that date. Provided that the form of application shall have been

Existing rules.	*Proposed rules.*
recording the statements of the persons who decline to sign and recording his personal opinion on the reasons given. He shall then send a report to the Divisional Canal Officer, who shall decide if the lease may be accepted, excluding the fields in the occupation of the persons who decline to sign or whether the lease shall be declined. The Divisional Canal Officer is authorized to grant a lease when not less than 95 per cent. of the net irrigable area of the block has been signed for In particular cases should it be desirable to grant a lease even though an area larger than 5 per cent. of the block has not been signed for, this may be done on the written order of the Superintending Engineer. The reasons for granting the lease shall be fully recorded.	tendered to the cultivators through their representative for signature after the adjustment of any matters in dispute with regard to classification or area of land not less than 15 days before the 1st December or subsequent date. Any provisional lease covering the same lands on which a supply of water may have been granted pending the completion of the lease for a term of years shall then become the substantive lease for the season and shall be put in force. 9A. Should it happen that the cultivators of the block proposed for lease are not unanimous, and that certain of them decline to sign the application, the zilladar shall report the matter to the Subdivisional Canal Officer. This officer shall hold a local enquiry, recording the statements of the persons who decline to sign and recording his personal opinion on the reasons given. He shall then send a report to the Divisional Canal Officer, who shall decide if the lease may be accepted, excluding the fields in the occupation of the persons who decline to sign or whether the lease shall be declined The Divisional Canal Officer is authorized to grant a lease when not less than 95 per cent. of the net irrigable area of the block has been signed for. In particular cases should it be desirable to grant a lease even though an area larger than 5 per cent. of the block has not been signed for, this may be done on the written order of the Superintending Engineer. The reason for granting the lease shall be fully recorded
15. Applicants for a lease for a term of years or for a season lease for the irrigation of autumn rice who may require water before the lease has been concluded can obtain a supply on tendering an application for a provisional lease in the form given as Appendix No. III to these rules. This application must be signed in the presence of the Sectional Officer or of some other responsible officer nominated for the purpose by the Subdivisional Canal Officer. The signatures should be those of the leading cultivators in the block in question, and they should represent holders of not less than 75 per cent. of the irrigable land within the block.	15. Applicants for a lease for a term of years or for a season lease for the irrigation of autumn rice who may require water before the lease has been concluded can obtain a supply on tendering an application for a provisional lease in the form given as Appendix No. III to these rules. This application must be signed in the presence of the Sectional Officer or of some other responsible officer nominated for the purpose by the Subdivisional Canal Officer.
As soon as the Subdivisional Canal Officer receives the application duly signed, he shall issue a permit in the form given as Appendix No. VIII to these rules, and shall at once supply water.	As soon as the Subdivisional Canal Officer receives the application duly signed, he shall issue a permit in the form given as Appendix No. VIII to these rules, and shall at once supply water.
47. The chaukidar of the village or such other representative as, with the consent of a majority of the lessees and with the approval of the Subdivisional Canal Officer, may be appointed for the purpose by the Deputy Collector, or other officer in charge of the Revenue Division, in consideration of his giving assistance in the matters noted below, shall be entitled to free irrigation of lands in his own occupation which may be within the boundaries of a block leased for a term of years, or to which water is supplied under a season lease other than a special lease for *dalwa* rice provided for in rule 19, subject to a limit of 3 per cent. on the total area assessed :— (*i*) In assisting the amin while preparing the assessment papers for land, which it is proposed to lease for a term of years, or for lands which have been irrigated under season leases. (*ii*) In procuring and attesting the signatures to the applications for long leases or for season leases for rice.	47. Before any lease other than a special lease for *dalwa* rice provided for in rule 19 is entered into, the Deputy Collector or other officer in charge of the Revenue Division shall select as representative of the cultivators person or persons who must have a direct interest in the land covered by the lease. The selection shall be made with the consent of a majority of the cultivators having an interest in the lease, and in consultation with the Subdivisional Canal Officer The person or persons so selected shall continue as representative for the village unless he or they resign the office, or unless the Deputy Collector or other officer in charge of the Revenue Division shall, for reasons recorded in writing, remove him or them from the office. 47A. The person or persons so selected are required to give assistance in respect of the following matters:— (1) To assist the amin while preparing the assessment papers. (2) To assist in procuring and to attest the signatures to applications for leases

Existing rules.

(*iii*) In receiving the individual notices of amounts assessed, and in distributing them to the persons concerned.

(*iv*) In attending when required at enquiries into complaints.

(*v*) In giving information to the Subdivisional or sectional officers regarding any insufficiency of the supply of water or of any misuse of the supply of water.

(*vi*) In giving information to the zilladar with respect to alterations in the occupancy of lands under lease for a term of years.

(*vii*) In assisting the tahsildar in collecting the rates.

48. The chaukidar or other representative shall only be entitled to the free irrigation if he renders the assistance required to the best of his ability. It shall be within the discretion of the Deputy Collector or other officer in charge of the Revenue Division to disallow the free irrigation and to recover the rates from the chaukidar or other representative for reasons duly recorded in writing.

Proposed rules.

(3) To receive and to distribute to the persons concerned the individual notices of amounts charged.

(4) To attend and to assist at enquiries into complaints.

(5) To give information to the Subdivisional Officer or to the Sectional Officer of any insufficiency in the supply of water or of any misuse of the water.

(6) To give information to the zilladar with respect to alterations in the occupancy of lands under a lease for a term of years.

(7) To assist the tahsildar in collecting the rates.

48. For such assistance the representative or representatives shall be entitled to the free irrigation of lands in his or in their own occupation which may lie within the lands covered by the lease, subject to a total limit of 3 per cent of the area assessed.

The Deputy Collector or other officer in charge of the Revenue Division may, for reasons recorded in writing, disallow in whole or part such free irrigation, and may recover the rates which would otherwise have been charged, if the assistance required by rule 47A has not been rendered to the best of the ability of the representative or representatives.

SCHEDULE OF RATES.

1. On a lease for a term of years for the irrigation of all crops on the land leased (supply of water given from 16th June to 31st March in each year)—

	Per máu. Rs. A. P.
For leases executed prior to 30th June 1902	1 8 0
For leases executed from 1st July 1902	1 12 0

2. For such lands included in a lease for a term of years as may be classified by the Canal Officer under rule 3 as only deriving material benefit in seasons of short rainfall ... . Rs. 0-8-0

These rates fall due on the 1st February of each year.

1. On a lease for a term of years for the irrigation of all crops on the land leased (supply of water given from 16th June to 31st March in each year)—

	Per máu. Rs. A. P.
For leases executed prior to 30th June 1902	1 8 0
For leases executed from 1st July 1902	1 12 0

2. For such lands included in a lease for a term of years as may be classified by the Canal Officer under rule 3 as only deriving material benefit in seasons of short rainfall ... ... Rs. 0-8-0

These rates fall due on the 1st February of each year.

Provided that in all cases in which the preliminary application for the lease has been presented on any date subsequent to the 31st of March of the year during which the lease is to commence, an additional charge of one pice per *gonut* equivalent to 6 annas 3 pies per máu shall be made on all lands in the lease for the year subsequent to that from which the lease commences.

EXISTING.

APPENDIX III

APPLICATION FOR SUPPLY OF WATER PRIOR TO CONCLUSION OF {* a lease for a term of years / a season lease for autumn (Sarad) rice.}

We, being principal cultivators of Mauza Pargana on our own behalf and on behalf of the other cultivators of the Mauza, hereby certify that we have presented an application for the grant of {* a lease for a term of years / a season lease for autumn (Sarad) rice} to cover all the irrigable land in a block situated in Mauza the area of which is approximately Máns. The boundaries of the block are shown in the attached sketch map, and are as specified below.

Now in order that we may obtain a supply of water at once and before the {* lease for a term of years / season lease for autumn (Sarad) rice} can be concluded, we whose signatures or marks are annexed below severally and jointly bind ourselves to pay the water rate on the whole area within the limits of the block as specified which may be determined by the Canal Officer to be irrigable: Provided that those fields which, under the existing conditions of cultivation, do not, in this season, require a supply of water, shall be exempted though classed as irrigable. We agree that under any circumstances the area to be charged for under this application shall be no less than Máns. In the event of {* a lease for a term of years / a season lease for autumn (Sarad) rice} not being concluded through the default or the non-consent of any of the cultivators of irrigable lands within the block, a rate of Rs 3 per Mán on the area determined as irrigable and as liable to be charged for in the present season will be charged to us and will be payable by us on or before the 1st of February next. Water to be supplied up to 30th November only.

In token of our obligation in this agreement, we annex our signatures or marks below.

Dated *189* .

. *Boundary*—North

East

South

West

Signature of applicant.	Date.	Signature of applicant.	Date.

CERTIFIED that the total approximate area of the block as ascertained by local enquiry is acres, and signatures of persons cultivating about per cent. of the whole area have been taken on this, and these are to my knowledge genuine.

* *Note.*—One or other to be scored through as may be proper.

Date.

Signature of Sectional Officer.

PROPOSED.

APPENDIX III.

APPLICATION FOR SUPPLY OF WATER PRIOR TO CONCLUSION OF { * a lease for a term of ____ years / a season lease for autumn (Sarad) rice. }

We, being cultivators of Mauza Pargana hereby certify that we have presented an application for the grant of { * a lease for a term of ____ years / a season lease for autumn (Sarad) rice } to cover all the irrigable land in a block situated in Mauza the area of which is approximately Máns. The boundaries of the block are shown in the attached sketch map, and are as specified below.

Now in order that we may obtain a supply of water at once and before the { * lease for a term of ____ years / season lease for autumn (Sarad) rice } can be concluded, we whose signatures or marks are annexed below severally bind ourselves to pay the water-rate on our holdings within the limits of the block as specified which may be determined by the Canal Officer to be irrigable: Provided that those fields which, under the existing conditions of cultivation, do not, in this season, require a supply of water, shall be exempted though classed as irrigable. We agree that under any circumstances the area to be charged for under this application shall be not less than Máns as specified by each of us below. In the event of { * a lease for a term of ____ years / a season lease for autumn (Sarad) rice } not being concluded through the default or the non-consent of any of the cultivators of irrigable lands within the block, a rate of Rs. 3 per Mán on the area determined as irrigable and as liable to be charged for in the present season will be charged to us and will be payable by us on or before the 1st of February next. Water to be supplied up to 30th November only.

In token of our obligation in this agreement, we annex our signatures or marks below.

Dated *189*

Boundary—North

East

South

West

Area declared by applicant.		Signature of applicant.	Date.	Signature of applicant.	Date.
Máns.	Goon				

CERTIFIED that the total approximate area of the block as ascertained by local enquiry is acres, and that the signatures of the persons taken on this are to my belief genuine.

* *Note.*—One or other to be scored through as may be proper.

Date

Signature of Sectional Officer.

Signature of Representative of Cultivators.

EXISTING.

APPENDIX VIII.

PERMIT FOR SUPPLY OF WATER PENDING COMPLETION OF LEASE FOR A TERM OF YEARS OR OF SEASON LEASE FOR RICE IRRIGATION.

To

of Village Pargana

WHEREAS you have applied for a supply of water which is required at once and before the {*lease for a term of years / season lease for rice irrigation} for which you have applied can be concluded and whereas you have agreed on condition of obtaining a supply of water that you whose names are recorded above will be severally and jointly responsible for the water rates which may be due on the full irrigable area of the block, the area of which is approximately Máns and the boundaries of which are shewn in the attached sketch map and are as specified below: Provided that those fields which under the conditions of cultivation of the present season do not in this season require a supply of water, shall be exempted though classed as irrigable. Further provided that as agreed by you, under any circumstances the area to be charged for under this lease shall not be less than Máns.

This is to inform you that water will now be supplied to the block from the Distributary Canal and the supply will be continued as required up to 30th November next. Your responsibility under the terms of your application will remain until the {*lease for a term of years / season lease for rice irrigation} is concluded when it will cease. In the event of the {*lease for a term of years / season lease for rice irrigation} not being concluded, through the default or non-consent of any of the cultivators of irrigable lands within the block, you will under the terms of your application be liable severally and jointly for a rate of Rs. 3 per Mán on the full irrigable area of the block subject to the provisos above, and on the 1st February next or on any subsequent date you may severally or jointly be called on by the Deputy Collector or other officer in charge of the Revenue Division to pay the full amount.

Boundary—North

South

East

West

* *Note.*—One or other to be scored through as may be proper.

Signature of Subdivisional Canal Officer.

PROPOSED.

APPENDIX VIII.

PERMIT FOR SUPPLY OF WATER PENDING COMPLETION OF LEASE FOR A TERM OF YEARS OR OF SEASON LEASE FOR RICE IRRIGATION.

To

of Village Pargana

WHEREAS you have applied for a supply of water which is required at once and before the {* lease for a term of years / season lease for rice irrigation *} for which you have applied can be concluded and whereas you have agreed on condition of obtaining a supply of water that you whose names are recorded above will be severally responsible for the water rates which may be due on your holdings in the full irrigable area of the block, the area of which is approximately Máns and the boundaries of which are shewn in the attached sketch map and are as specified below: Provided that those fields which under the conditions of cultivation of the present season do not in this season require a supply of water, shall be exempted though classed as irrigable. Further provided that as agreed by you, under any circumstances the area to be charged for under this lease shall not be less than Máns.

This is to inform you that water will now be supplied to the block from the Distributary Canal and the supply will be continued as required up to 30th November next. Your responsibility under the terms of your application will remain until the {* lease for a term of years / season lease for rice irrigation *} is concluded when it will cease. In the event of the {* lease for a term of years / season lease for rice irrigation *} not being concluded, through the default or non-consent of any of the cultivators of irrigable lands within the block, you will under the terms of your application be liable severally for a rate of Rs. 3 per Mán on your holdings in the full irrigable area of the block subject to the provisos above, and on the 1st of February next or on any subsequent date you may severally be called on by the Deputy Collector or other officer in charge of the Revenue Division to pay the amount due on your respective holdings.

Boundary—North

South

East

West

* *Note.*—One or other to be scored through as may be proper.

Signature of Subdivisiona Canal Officer.

[Fourth Publication.]

The 6th June 1905.

No. 16.—Notification.—It is hereby notified for general information that the Lieutenant-Governor of Bengal proposes, under the provisions of sections VI and XI of Act V (B.C.) of 1864, to make the following addendum to the schedule of tolls in force on the Calcutta Canals and Tolly's Nala and published in Notification No. 144, dated the 23rd May1893.

W. A. INGLIS,
Secy. to the Govt. of Bengal.

13.—During neap-tides, when there is not sufficient water in the Tolly's Nala near Russa for the navigation of boats laden with firewood, they will be allowed to proceed to or from the river Biddiadharee through the Circular Canal on payment of a rate of eight annas per 100 maunds of measured maundage for passage through that canal in addition to the rate ordinarily payable for entering or plying in Tolly's Nala.

For purposes of reckoning demurrage charges under item No. 11 of the schedule, two extra days will be allowed over and above those provided for vessels plying on the Tolly's Nala.

Boats plying under this concession will not be allowed either to load or to unload along the Circular Canal or river Hooghly. Infringement of this rule will render the boats liable to the ordinary tolls in force for the Circular Canal.

RAILWAY DEPARTMENT.

The 19th June 1905.

No. 24R.—Notification.—The following notification issued by the Railway Board is republished for information:—

W. A. INGLIS,
Secy. to the Govt. of Bengal.

No. 90, dated the 6th June 1905.—The following is published for general information:—

No. 171R.T.

RAILWAY BOARD.

Simla, the 29th May 1905.

READ—

Section 47 of the Indian Railways Act, 1890 (IX of 1890).

Government of India, Department of Commerce and Industry, notification No. 801, dated the 24th March 1905.

Letter from the Government of Bengal, Railway Department, No. 72T.R., dated the 10th May 1905.

RESOLUTION.—The Managing Agents of the Baraset-Basirhat Light Railway Company, Limited, have applied that the General Rules for working open lines of railway in British India, which have been promulgated under the Government of India, Public Works Department, Circular No. 6 Railway, dated 12th March 1895, and published under the Government of India, Public Works Department. Notification No. 118, dated the 21st March 1895 (*vide* the *Gazette of India* of the 23rd March 1895), as modified by the Government of India, circulars Nos. 3 Railway, dated the 22nd May 1896, 3 Railway, dated the 3rd February 1897, 1 Railway, dated the 3rd March 1898, III Railway, dated the 15th March 1898, V Railway, dated the 3rd July 1899, XII Railway, dated the 17th October 1900, II Railway, dated the 19th March 1901, III Railway, dated the 22nd March 1901, 2 Railway, dated the 16th January 1902, II Railway, dated the 21st January 1902, IV Railway, dated the 4th March 1902, V Railway, dated the 11th July 1902, 1 Railway, dated the 4th March 1903, 3 Railway, dated the 7th September 1903, I Railway, dated the 20th January 1904, 5 Railway, dated the 13th September 1904, and 6 Railway, dated the 14th December 1904, which were published under Public Works Department Notifications Nos. 257, dated the 28th May 1896, 55, dated the 5th February 1897, 104, dated the 10th March 1898, 134, dated the 23rd March 1898, 298, dated the 14th July 1899, 432, dated the 26th October 1900, 142 and 143, dated the 27th March 1901, 34 and 35, dated the 29th January 1902, 83, dated the 11th March 1902, 258, dated the 23rd July 1902, 101, dated the 11th March 1903, 352, dated the 24th September 1903, 39, dated the 28th January 1904, 300, dated the 23rd September 1904, and 394, dated the 22nd December 1904 (*vide* the *Gazette of India* of the 30th May 1896, 6th February 1897, 12th March 1898, 26th March 1898, 15th July 1899, 27th October 1900, 30th March 1901, 1st February 1902, 15th March 1902, 26th July 1902, 14th March 1903, 26th September 1903, 30th January 1904, 24th September 1904 and 24th December 1904), may be made applicable to the Baraset-Basirhat Light Railway.

2. In exercise of the powers conferred by the notification of the Government of India in the Department of Commerce and Industry, No. 801, dated the 24th March 1905, read in the preamble above, the Railway Board are accordingly pleased, under section 47, sub-section (3) of the Indian Railways Act, 1890 (IX of 1890), to sanction the application of the General Rules for working railways open for traffic cited in paragraph 1 above to the Baraset-Basirhat Light Railway and to any extensions thereof which may hereafter be opened for the public carriage of passengers, animals or goods.

ORDER.—Ordered that this Resolution be published under a notification in part I of the *Gazette of India* as required by section 47, sub-section (3) of the Indian Railways Act, 1890 (IX of 1890); also that the General Rules cited in paragraph 1—which have already been published in the *Gazette of India*—be kept at railway stations as directed by sub-section (6) of the same section; and that this Resolution be communicated to the Government of Bengal and to the Senior Government Inspector of Railways, Calcutta, for information and guidance.

MARINE DEPARTMENT.

The 27th June 1905.

No. 68Marine.—In exercise of the powers conferred on him by section 9 of the Indian Petroleum Act, 1899 (VIII of 1899), and in supersession of the rules sanctioned under Notification No. 104Marine, dated the 20th September 1904, the Lieutenant-Governor is pleased, with the previous sanction of the Governor-General in Council, to make the following rules for regulating the grant, to owners of motor vehicles, of licenses to possess and transport petrol for use in such motor vehicles.

1. In these rules—

(*a*) "motor vehicle" includes all vehicles propelled by mechanical means on ordinary roads, and motor boats and launches;

(*b*) "petrol" includes "other dangerous petroleum" used for the propulsion of motor vehicles.

2. (1) Licenses may be granted to the owners of motor vehicles—

(*a*) to possess petrol intended for use in motor vehicles;

(*b*) to transport petrol on motor vehicles for use in propelling such motor vehicles;

(*c*) to transport petrol by other means of conveyance by road, rail or water.

(2) Such licenses may be granted, in the town and suburbs of Calcutta, by the Commissioner or Deputy Commissioner of Police, and elsewhere by the District Magistrate or such other officer as the Local Government may, from time to time, by order in writing appoint.

(3) The licenses under rule 2 (1), clauses (*a*) and (*b*), shall be granted in the annexed Form II, and those under rule 2 (1), clause (*c*), in the annexed Form I.

3. The licenses under clauses (*a*) and (*b*) of rule 2 (1) shall be granted free of charge, and those under clause (*c*) of that rule for a fee of Rs. 5. The licenses shall remain in force for a period of one year, at the expiry of which they shall expire, but may be renewed.

4. Every license shall be subject to the following conditions, namely:—

(1) When not carried in a receptacle forming part of a motor vehicle the petrol shall not be kept, used or transported except in iron or steel vessels so substantially constructed as not to be liable, save by gross negligence or extraordinary accident, to be broken or become defective or insecure.

Every such vessel shall be so constructed and maintained that no leakage, whether of liquid or vapour, can take place therefrom.

(2) Every such vessel, when used for transporting or keeping petrol, shall have attached thereto a metallic or enamelled label in conspicuous characters, stating the description of the petrol with the addition of the words "highly inflammable" legibly and indelibly stamped or marked thereon, and with the addition of the name and address of the owner.

(3) Every such vessel shall have an air-space equal to one-tenth of its capacity to allow for expansion of the petrol.

(4) No such vessel shall contain more than four gallons.

(5) Before repairs are done to any such vessel, it shall, as far as practicable, be cleaned by the removal of all petrol and of all dangerous vapours derived from the same.

(6) The store-house or building in which the petrol is stored shall be well ventilated and constructed of uninflammable materials.

(7) Where a store-house forms part of, or is attached to, another building, and the intervening floor or partition is of an unsubstantial or inflammable character, or has an opening therein, the whole of such building shall be deemed to be the store-house, and no portion of such store-house shall be used as a dwelling or as a place where persons assemble.

A store-house shall have a separate entrance from the open air distinct from that of any dwelling or building in which persons assemble.

(8) The amount of petrol which may be kept by the owner of a motor vehicle, whether or not upon motor vehicles, shall not exceed sixty gallons at any one time.

(9) The amount of petrol which may be transported under a license granted under rule 2 (1), clause (*c*), shall not exceed sixty gallons.

(10) The filling or replenishing of any vessel with petrol shall not be carried on, nor shall the contents of any such vessel be exposed, in the presence of fire or artificial light, except a light of such construction, position and character as not to be liable to ignite any inflammable vapour arising from the petrol, and no fire or artificial light capable of igniting inflammable vapour shall be brought within dangerous proximity of the place where any vessel containing petrol is being kept.

(11) In the case of all petrol kept or transported for the purpose of, or in connection with, any motor vehicle—

(*a*) all due precautions shall be taken for the prevention of accidents by fire or explosion, and for the prevention of unauthorized persons from having access to any petrol kept or transported, and to the vessels containing, or intended to contain, or having actually contained the same, and

(*b*) every person managing or employed on, or in connection with, any motor vehicle shall abstain from every act whatever which tends to cause fire or explosion, and which is not reasonably necessary, and shall prevent any other person from committing any such act.

(12) The store-house shall be liable to inspection by any police officer not lower in rank than Inspector of Police, or by any other officer whom the Local Government may depute for that purpose.

5. The general rules for the possession and transport of dangerous petroleum in force in the province of Bengal for the time being shall, except so far as they are inconsistent with the foregoing rules, apply to petrol kept or transported for use in motor vehicles.

FORM H.

[Situation of store-house to be here described.]

Special license to possess and transport petrol under section 5 or section 6 of Act VIII of 1899.

No.

License is hereby given to , owner [or hirer] of a motor vehicle [or vehicles] for the possession of gallons of petrol for use therein at and for its transport thereon for the purpose of use thereon, subject to the conditions below.

The license shall continue in force till the day of 190

Commr. or Deputy Commr. of Police.
District Magistrate.

The *190* .

ENDORSEMENT ON FORM H.

The petrol may be stored only in the place described in the license.

[Here enter also rule 1, clauses (1) to (12) of rule 4, and rule 5.]

FORM I.

Special license to transport petrol by road, rail or water under section 5 or section 6 of Act VIII of 1899.

No.

Fee Rs. 10.

License is hereby given to owner (or hirer) of a motor vehicle (or vehicles) to transport by road, rail or water, sixty gallons of petrol, subject to the conditions below.

This license shall continue in force till the day of 190 .

Commissioner or Deputy Commr. of Police.
District Magistrate.

190

ENDORSEMENT ON FORM I.

(Here enter rule 1, clauses 1 to 12 of rule 4, and rule 5.)

W. A. INGLIS,
Secy. to the Govt. of Bengal.

SUBORDINATE CIVIL SERVICE.

No. 2934A.

No. 1762A.D.—The 21st June 1905.—Babu Prabodh Chandra Majumdar, substantive *pro tempore* Sub-Deputy Collector, Chota Nagpur Division, is posted to the head-quarters station of the Hazaribagh district.

Hazaribagh.

No. 1803A.D.—The 23rd June 1905.—Under the authority vested in him by section 357, sub-section (2), of the Code of Criminal Procedure, Act V of 1898, the Lieutenant-Governor empowers Maulvi Syed Mohamad Akbar, substantive *pro tempore* Sub-Deputy Magistrate, Kendrapara, Cuttack, to take down evidence in criminal cases in the English language.

Cuttack.

No. 1805A.D.—The 23rd June 1905.—Babu Lalit Mohan Bose, substantive *pro tempore* Sub-Deputy Collector, Tippera, is transferred to the head-quarters station of the Chittagong district.

Tippera.
Chittagong.

The order of the 23rd May 1905, granting sixteen days' extraordinary leave to Babu Lalit Mohan Bose, is cancelled.

No. 1839A.D.—The 24th June 1905.—Babu Basanta Kumar Roy, substantive *pro tempore* Sub-Deputy Collector, Midnapore, is transferred temporarily to the Contai subdivision of that district.

Midnapore.

No. 1851A.D.—The 24th June 1905.—Babu Jyotish Chandra Maitra, substantive *pro tempore* Sub-Deputy Collector, Orissa Division, is posted to the Khurda subdivision of the Puri district.

Puri.

No. 1866A.D.—The 27th June 1905.—Mr. D. Macdonald, substantive *pro tempore* Sub-Deputy Collector, Rajshahi Division, is posted temporarily to the head-quarters station of the Darjeeling district.

Darjeeling.

No. 1868A.D.—The 27th June 1905.—Babu Bhuban Mohan Chatterji, Sub-Deputy Collector, Faridpur, is transferred temporarily to the Madaripur subdivision of that district, with effect from the date on which he joined there.

Faridpur.

No. 1872A.D.—The 27th June 1905.—Babu Gopendra Kumar Ghose Chaudhuri, substantive *pro tempore* Sub-Deputy Collector of the Rajshahi Division, is posted to the head-quarters station of the Rangpur district.

Rangpur.

No. 1874A.D.—The 27th June 1905.—Babu Susil Kumar Ghose, substantive *pro tempore* Sub-Deputy Collector, 24-Parganas, is transferred to the Barrackpore subdivision of that district.

24-Parganas.

No. 1876A.D.—The 27th June 1905.—The substantive *pro tempore* Sub-Deputy Collectors of the Presidency Division, named below, are posted to the head-quarters station of the 24-Parganas district:—

24-Parganas.

Maulvi Abdul Ghaffar. | Babu Surendra Nath Banerjea.

No. 1882A.D.—The 27th June 1905.—Maulvi Syed Mohamed Akbar, substantive *pro tempore* Sub-Deputy Collector, Kendrapara, Cuttack, is vested with the powers of a Deputy Collector for the trial of rent and other suits under Act X of 1859.

Cuttack.

No. 1884A.D.—The 27th June 1905.—Babu Monmohan Mukherjee, Sub-Deputy Collector, Puri, is vested with the powers of a Deputy Collector for the trial of rent and other suits under Act X of 1859.

Puri.

No. 1908A.D.—The 27th June 1905.—The substantive *pro tempore* Sub-Deputy Collectors named below are transferred to the head quarters station of the Ranchi district:—

Faridpur.
Noakhali.
Ranchi.

Maulvi A. K. Kaboeruddin Ahmed, Faridpur.
Babu Braja Nath Rai, Sandip, Noakhali.

No. 1912A.D.—The 27th June 1905.—The substantive *pro tempore* Sub-Deputy Collectors named below are posted to the divisions mentioned opposite their names and are vested with the powers of a Magistrate of the third class, on being relieved of their settlement duties:—

Chittagong Divn.
Dacca Divn.
Presidency Divn.

Maulvi Ahmed Ali	...	Chittagong Division.
,, Saleh Ahmad	...	Dacca ditto.
Babu Rash Bihary Mukerjee	...	Presidency ditto.

No. 1918A.D.—The 27th June 1905.—Babu Ganoda Prasad Ghose, Sub-Deputy Collector, is allowed leave for twenty four days, under article 260 of the Civil Service Regulations, with effect from the 1st July 1905, or any subsequent date on which he may be relieved of his present appointment as Assistant Settlement Officer, Backergunge.

Backergunge.

Nos. 1934-35A.D.—The 27th June 1905.—The gentlemen named below are appointed substantively *pro tempore* to the fifth grade of Sub-Deputy Collectors, and are posted to the divisions mentioned against their names:—

Babu Surendra Nath Datta, B.A.	...	Bhagalpur Division.
Maulvi Mahomed Sadiq, B.A.	...	Patna ditto.

They are also vested with the powers of a Magistrate of the third class.

No. 1939A.D.—The 27th June 1905.—The officers named below are promoted to the first grade of Sub-Deputy Collectors, with effect from the 1st April 1905:—

Babu Kali Pada Chuckerbutty.
„ Kaylash Chunder Chatterjee.
„ Khudiram Podder.
Maulvi Mahummed Gousi.
Babu Tara Nath Bose.
Babu Komul Narain Chuckerbutty.
„ Bhubun Mohun Gupta.
Maulvi Shuffee-ooddeen Ahmed.
Babu Rameshwar Prasad.
Dewan Krishta Chandra.

R. W. CARLYLE,
Offg. Chief Secy. to the Govt. of Bengal.

CIVIL MEDICAL DEPARTMENT, BENGAL.

No. 1435D., dated Darjeeling, the 20th June 1905.—Senior Assistant Surgeon Kasi Nath Ghosh is allowed privilege leave for one month under article 260 of the Civil Service Regulations, with effect from the date on which he availed himself of it.

No. 1457D., dated Darjeeling, the 21st June 1905.—Third grade Assistant Surgeon Satis Chandra Mitra of the Gumla subdivision and dispensary, in the Ranchi district, is allowed under articles 232 and 339, Note 1, Civil Service Regulations, extraordinary leave for four days from the 14th April 1905, in continuation of the three months' sick leave sanctioned in this Department Notification No. 1518, dated the 4th February 1905.

No. 1466D., dated Darjeeling, the 21st June 1905.—Third grade Assistant Surgeon Basanta Kumar Roy of the Purnea Dispensary is allowed privilege leave for two months under article 260 of the Civil Service Regulations, with effect from the 2nd July 1905, or any subsequent date on which he is relieved of his duties.

No. 1469D., dated Darjeeling, the 21st June 1905.—Third grade Assistant Surgeon Debendra Nath Hazra is appointed to act at the Purnea Dispensary, during the absence, on leave, of third grade Assistant Surgeon Basanta Kumar Roy or until further orders.

No. 1493-D., dated Darjeeling, the 22nd June 1905.—Third-grade Assistant Surgeon Sanat Kumar Barat, Medical Officer, Eastern Bengal State Railway Dispensary at Parbatipur, is appointed to be House Physician, Medical College Hospital, Calcutta, *vice* 3rd-grade Assistant Surgeon Rajendra Nath Chakravarti, transferred.

No. 1502-D., dated Darjeeling, the 22nd June 1905.—Third-grade Assistant Surgeon Rajendra Nath Chakravarti, House Physician, Medical College Hospital, Calcutta, is appointed to be Medical Officer, Eastern Bengal State Railway Dispensary at Parbatipur, *vice* 3rd-grade Assistant Surgeon Sanat Kumar Barat, transferred.

S. H. BROWNE, COL., M.D., I.M.S.,
Inspector-General of Civil Hospitals, Bengal.

Sheriff's Office, the 31st May 1905.

NOTICE is hereby given that the Third Criminal Sessions of the year 1905 of the High Court of Judicature at Fort William in Bengal, for the Town of Calcutta and Factory of Fort William, and the places subordinate thereto, will be held at the Court-house, in the Town of Calcutta, on Monday, the third day of July next, at 11 o'clock in the forenoon, and thenceforward from day to day until the said Sessions be over. And it is hereby proclaimed that all persons who are to prosecute any of the prisoners to be brought up for trial at the said Sessions be present then and there to prosecute.

E. CABLE, *Sheriff.*

সরিফ আফিস, সন ১৯০৫ সাল তারিখ ৩১শে মে।

সকলকে সমাচার দেওয়া যাইতেছে যে যুবে বাঙ্গালার কোর্ট উইলিয়ম দুর্গের অধীন সহর কলিকাতার ও অন্যান্য স্থানের ফৌজদারী বিচার নিষ্পত্তি জন্য আগামী সন ১৯০৫ সালের ৩রা জুলাই সোমবার বেলা ১১ ঘটিকার সময় এবং যে পর্য্যন্ত সেশিয়ানের কার্য্য শেষ না হয় প্রতিদিন উক্ত সময়ে কলিকাতার হাইকোর্টের আপন আদালত ঘরে সন ১৯০৫ সালের তৃতীয় ক্রিমিনেল সেশিয়ান বসিবেক এবং এতদ্দ্বারা প্রচার করা যাইতেছে যে, যে সকল ব্যক্তি কোন কয়েদির বিরুদ্ধে ফৌজদারী মিছিল করিবেক তাহারা উক্ত স্থানে উক্ত সময়ে হাজির থাকিয়া মোকদ্দমা করে ইতি।

ই: কেবল, সরিফ।

EDUCATION DEPARTMENT, BENGAL.

Subordinate Educational Service.

The 17th June 1905.—The following arrangements are sanctioned consequent on the appointment of Maulvi Muhammad Azizul Huq, M.A., Headmaster of the Patna City School, to be Head master of the Hooghly Collegiate School:—

(1) Maulvi Alfazuddin Ahmed, M.A., Assistant Master and now Officiating Assistant Headmaster, Anglo-Persian Department, Calcutta Madrassa (class IV), is appointed to be Headmaster of the Patna City School *vice* Maulvi Muhammad Azizul Huq.

(2) Maulvi Abdul Quadir Khan, M.A., Officiating Assistant Master, Anglo-Persian Department of the Calcutta Madrassa, is appointed substantively *pro tempore* Assistant Master in that institution *vice* Maulvi Alfazuddin Ahmed transferred, and substantively *pro tempore* to class V of the Subordinate Educational Service in the resulting vacancy arising from the promotion of Maulvi Muhammad Azizul Huq to the Provincial Educational Service.

(3) Maulvi Mir Ikram Ali, Assistant Master in the Anglo-Persian Department, Calcutta Madrassa (class V), is appointed to act as Assistant Headmaster of the same institution, during the absence, on deputation, of Maulvi Mahmud.

The 20th June 1905.—Consequent on the retransfer to the Department, with effect from the 1st July 1905, of the Monghyr Zilla School, now under the management of the Joint-Committee, the following arrangements are sanctioned:—

(1) Babu Mati Lal Mukerjea, an Assistant Master transferred to the Joint-Committee with the Monghyr Zilla School (*seconded* in class V of the Subordinate Educational Service), is appointed to be Headmaster of that School, and he will henceforth take his place in the regular cadre of that service.

(2) Babu Guru Bandhu Bhattacharjee, B.A., Assistant Headmaster, Chittagong Collegiate School (class VIII), is appointed to be Assistant Headmaster of the Monghyr Zilla School.

(3) Babu Akshoy Chandra Pal, B.A., is appointed temporarily to be an Assistant Master in the Monghyr Zilla School, and substantively *pro tempore* to class VIII of the Subordinate Educational Service.

(4) Pandit Aditya Nath Upadhyaya, an Assistant Master (Head Pandit), transferred to the Joint-Committee with the Monghyr Zilla School (seconded in class VIII of the Subordinate Educat onal Service), will continue in his present appointment, but he will take his place in the regular cadre of that service.

V. H. JACKSON,
Asst. Director of Public Instruction, Bengal, in charge.

The 24th June 1905.—The leave granted to Maulvi Muhammad Sulaiman, B.A., Deputy Inspector of Schools, Backergunge (class III) under the orders of the 14th April 1905, will not take effect until after his return from deputation to Port Blair.

Babu Barada Prasad Sarkar, Additional Deputy Inspector of Schools, Backergunge (class IV) is appointed to act as Deputy Inspector of Schools, Backergunge, during the absence, on deputation, of Maulvi Muhammad Sulaiman, or until further orders.

Maulvi Zakiuddin Ahmed, B.A., Sub-Inspector of Schools, Backergunge, is appointed, subject to the consent of the District Board, to act as Additional Deputy Inspector of Schools, Backergunge, and in class IV of the Subordinate Educational Service, during the deputation of Babu Barada Prasad Sarkar, or until further orders.

The 25th June 1905.—Babu Surendra Nath Tarafdar, M.A., Assistant Headmaster, Chapra Zilla School (class VIII) was absent on leave from the 9th to the 15th March 1905, both days inclusive, under article 339 of the Civil Service Regulations.

V. H. JACKSON,
for *Director of Public Instruction, Bengal.*

NOTIFICATION.

(*In re*-Director of Public Instruction's Circular No. 181, dated the 25th October 1904.)

THE Half-yearly Examination in the Art of Teaching of teachers teaching English subjects in Government and Aided Schools in the Orissa Division and the Orissa Tributary Mahals will be held at the Mission High School, Cuttack, on the 28th August 1905, at 11 A.M.

(*N. B.*—Only experienced teachers or those who have passed at least the entrance examination are eligible for this examination.)

The examination of teachers teaching Vernacular Subjects in the same class of schools will be held in the Training School, Cuttack, on the 29th August 1905, at 11 A.M.

(*N. B.*—Only those who have passed at least the Middle English or Middle Vernacular examination are eligible for this examination.)

Candidates are required by the 20th August 1905, to apply in writing for admission to the examinations, and to furnish the information requisitioned below :—

1. Name in full.
2. Name of father.
3. Name of native village and district.
4. Name of school in which at present employed.
5. Number of years he has served as a teacher.
6. (*a*) Whether (if he is a candidate for the English Subjects examination) he has passed the Entrance examination.
   (*b*) Whether (if he is a candidate for the Vernacular Subjects Examination) he has passed by the Middle Vernacular Standard examination.
   (*c*) Whether (in either case) he has not passed either of the above public examinations.

Candidates are requested to bring their University or other certificates with them to the examinations.

The Practice of Teaching.

The subjects of examination will be (in English)—

(*a*) a lesson in Reading ;
(*b*) a lesson in History. Subject—"The reign of the Emperor Akbar."

The subjects of examination will be (in Uriya)—

(*a*) a lesson in Reading and Explanation of Passages;
(*b*) a lesson in Compound Addition.

There will be a further examination in Class Control, and in the Art of Teaching, which will include Object Lessons, Class Management, Organisation and Discipline.

CUTTACK, HERBERT A. STARK,
The 21st June 1905. *Inspector of Schools, Orissa Division.*

NOTIFICATION.

THE half-yearly examination in the Art of Teaching for teachers of English subjects employed in Government and aided schools in the Presidency Division will be held in the Bow Bazar High School at 85 Bowbazar Street, Calcutta, on the 14th August next. The halfy-early examination for teachers of Vernacular subjects will be held at the Calcutta Training School on the 16th idem.

Teachers who intend to present themselves at the examination are requested to send (at least 15 days before the examination) a statement containing the following information, and should also bring with them their University or other certificates on the day of the examination :—

1. Name (in full).
2. Name of father (in full).
3. Name of native village and district.
4. Last University examination passed.
5. Year of passing.
6. Signature of the applicant.
7. Designation and full address.

The candidates will be expected to give two lessons on such subjects as English Bengali, History, Geography, Arithmetic, Euclid, Alegbra, etc.; they should also be familiar with the Art of Teaching.

CALCUTTA, P. MUKERJI,
The 27th June 1905. *Inspector of Schools, Presidency Division.*

NOTIFICATION.

THE Half-yearly Examination in the Art of Teaching for Teachers of vernacular subjects employed in Government and Aided schools in the Chittagong Division will be held at the Training School at Chittagong on the 30th August 1905 at 11 A.M. in accordance with the Director of Public Instruction's Circular No. 181, dated the 25th October 1904. The Half-yearly Examination for Teachers of English subjects will be held at the Chittagong Municipal High English School on the 31st idem.

As a practical test of their teaching ability the candidates will be required to give a lesson on Reading and explanation and another lesson on Euclid or Geography.

Teachers who intend to present themselves at the examination should send (at least a fortnight before the date fixed for the examination) a statement containing the following

information, and should also bring with them their University or other certificates to the examination centre —

1. Name (in full).
2. Name of father (in full).
3. Name of native village and district.
4. University or departmental examination passed.
5. Year of passing the same.
6. Designation and full address.

CHITTAGONG,
The 15th June 1905.

ABDUL KARIM,
Inspector of Schools, Chittagong Division.

CIVIL ENGINEERING COLLEGE, SIBPUR.

AGRICULTURAL DEPARTMENT.

HIGHER AGRICULTURAL CLASS.

[Session 1905-1906.]

Rules for admission.

FOR admission to the Higher Agricultural Class, an applicant must have one of the following qualifications:—

(i) He must have passed the F.E. Examination of the Calcutta University, and be under 23 years of age, but no student will be allowed to join the Agricultural class after the expiration of five years from admission into the Engineering College.

(ii) He must have passed the B A. Examination of the Calcutta University by the B. course, or possess other sufficient educational qualifications; be under 23 years of age, and, in addition, have received a nomination from the Bengal Government.

(iii) He must have had a general education qualifying him to follow the instruction in the Higher Agricultural Class, and must also receive a nomination from Government for admission as a special student. To be eligible for a nomination under this rule, a candidate must either have landed property of his own, or be recommended by some influential landholder who desires to train him to take part in the management of his estate, or he must otherwise satisfy Government that he intends to make practical use of his agricultural training. Students entering under this rule will be termed Special Agricultural students. They will not be subject to any maximum limit of age, but will not be entitled to the privileges conferred on passed students under rules 12 and 13, even though they should obtain fully-signed diplomas in due course after passing the necessary examinations.

Every candidate for admission to this Department must apply in writing to the Principal not later than the 14th July. The form of application for a nomination, which must be addressed to the Principal, is given in Appendix B. In the event of the form not being properly filled up and accompanied by the necessary certificates, no notice will be taken of the application.

The number to be nominated each year will depend on the accommodation available.

Every applicant, not already a student of the College, must undergo a medical examination by the College Surgeon before admission to this Department. If this officer's report is unsatisfactory, the applicant will not be admitted.

The session begins on the first Monday in November. All students are required to join the College on that day. Any student prevented by sickness from attending on the opening day must produce a certificate to that effect from a Civil or Assistant Surgeon, failing which he will be liable to a fine not exceeding Rs. 10. No student will be admitted or re-admitted to the College after the month of November, except by special orders of the Director of Public Instruction. This permission will only be given under exceptional circumstances.

COURSE OF INSTRUCTION.

The course of instruction in the Higher Agricultural Class will extend over two academic years.

SCHOLARSHIPS.

Senior scholarships awarded in the Engineer Department are tenable in the Agricultural Department.

One graduate scholarship of Rs. 30 a month, tenable for one year, will be awarded on the result of the examination held at the end of the first academic year.

APPOINTMENTS.

Two appointments annually are assigned to students holding a fully-signed diploma: one in the Provincial Executive Service and one in the Subordinate Executive Service. The right of selection for these appointments will rest with Government, and the students who gained the highest marks at the examination fordiplomas will not necessarily be selected.

ENTRANCE AND TUITION FEES.

Each student in the Higher Agricultural Department will be required to pay an *admission fee* of Rs. 10.

F.E.'s who elect to join the Agricultural Department immediately after passing the F.E Examination are exempted from the payment of this fee, as their names are already borne on the College books.

For the present no tuition fees will be charged to students in the Agricultural Department, except in the case of those joining as special students under rule 3 (iii). The tuition fees for these students will be Rs. 8 a month.

Further particulars may be obtained free on application to the Principal.

SIBPUR,
The 7th June 1905.

A. MACDONELL,
Offg. Principal, Civil Engineering College.

NOTICE No. I.

OFFICE OF THE INSPECTOR OF SCHOOLS, CHOTA NAGPUR DIVISION.

Purulia, the 10th June 1905.

THE half-yearly Examination of teachers who teach through the medium of English, in the art of teaching, will be held in the Purulia Zilla School on the 7th August 1905. The candidates who appear at this examination must have passed the Entrance or some other higher examination. They are requested to bring their certificates with them for admission to the said examination.

2. The examination will be mainly practical and will consist of—

(*a*) Practical examination in class control.
(*b*) A practical test of teaching ability.
(*c*) An oral examination, in which the Inspector of Schools or any other examiner will put some questions on the art of teaching, object lessons, class management, organization and discipline.

Knowlton's "Kindergarten Methods."

3. The book noted in the margin is prescribed for the said examination.

BALDEV MISRA,
Assistant Inspector of Schools,
Chota Nagpur Division, in charge.

Purulia, the 17th June 1905.

[Correction to Circular Notice of the 10th June 1905.]

Read "Knowlton's Kindergarten Methods" *in place of* Salmon's "Teacher's Handbook of Slojid (George Phillip & Co.)."

NOTICE No. II.

THE half-yearly examination of teachers of Vernacular subjects, who have at least passed the Middle Vernacular Standard Examination, will be held in the first grade Training School at Ranchi on the 30th August 1905. The candidates are requested to bring their certificates with them for admission to the said examination.

2. The examination will be mainly practical, and will consist of—

(*a*) Practical examination in class control.
(*b*) A practical test of teaching ability.
(*c*) An oral examination in which the Inspector of Schools or any other examiner will put some questions on the art of teaching, object lessons, class management, organization and discipline.

BALDEV MISRA,
Assistant Inspector of Schools, in charge.

NOTICE.

COMMERCIAL CLASSES IN THE PRESIDENCY COLLEGE.

DAY classes in the following subjects will be opened in the College on the 27th June 1905:—

1. English (modern), especially English correspondence including Commercial correspondence, letter-drafting and précis-writing.
2. Arithmetic, including Commercial and Mental Arithmetic.
3. Book-keeping, Short-hand and Type-writing.
4. Commercial History and Geography.
5. Bengali, especially Commercial correspondence, letter-writing, précis-writing and translation.

All will be admitted to the Day classes who have passed the School Final or the Entrance Examination or who are able to satisfy the Education Department by passing a simple preliminary test examination.

There is no age limit.

The fee for the Day classes is Rs. 3 a month.

P. K. RAY,
Offg. Princal, Presidency College.

PRESIDENCY COLLEGE, CALCUTTA, *the 8th March 1905.*

NOTICE.

EVENING classes in the following subjects will be opened in the College on the 27th June next:—

1. Banking and Currency.
2. Commercial and Industrial Law.
3. Book-keeping.
4. Short-hand.
5. Type-writing.

Candidates who have attended the lectures in the day course will be eligible for admission to the Evening course, but others will be admitted if they satisfy the Education Department by passing a simple preliminary test examination.

There is no age limit.

The fee is Rs. 3 for each series of fifteen lectures in the evening course on—

1. Banking and Currency; and
2. Commercial and Industrial Law;

and Rs. 10 for each course of lectures on—

1. Book-keeping.
2. Short-hand; and
3. Type-writing.

P. K. RAY,
Offg. Principal, Presy. College.

PRESY. COLLEGE, CALCUTTA, *the 15th May 1905.*

NOTIFICATIONS OF THE BOARD OF REVENUE.

No. 4151B.

NOTICE is hereby given that the Eighth Sale of Opium, the Provision of 1902-03 and 1903-04, will be held at the Government Opium Sale Room, No. 2 Bankshall Street, on Tuesday, the 1st August 1905, at 11 A.M., and will comprise 4,000 chests, viz.—

	Chests.
Opium manufactured at the Patna Factory consisting of 1,768 chests of season 1902-03 and 232 chests of season 1903-04...	2,000
Opium manufactured at the Ghazipur Factory consisting of 1,994 chests of season 1902-03 and 6 chests of season 1903-04 ...	2,000
Total ...	4,000

2nd.—The general conditions of the Sale now advertised will be the same as usual. They may be ascertained by reference to the Notification issued on the 22nd November 1904, and published in the *Government* and *Exchange Gazettes*, or on personal application at the office of the Board of Revenue.

3rd.—The latest dates for deposit and clearance will be the 7th and 16th August 1905, respectively, that is to say, no Bank of Bengal Receipts, Government Promissory Notes or other Public Securities that may be tendered for deposit in redemption of Promissory Notes

given by purchasers in the Sale Room will be received after 3-30 P.M. of Monday, the 7th August 1905, and no Bank of Bengal Receipts in full payment of lots will be accepted after 3-30 P.M. of Wednesday, the 16th August 1905.

4th.—In addition to the quantity above advertised for sale, the following quantities, more or less, of the Opium manufactured at the Patna and Ghazipur Factories will be brought to sale between the sale now advertised and December next on or about the dates specified below. The Board of Revenue, however, reserve to themselves the right of altering these dates should circumstances render it expedient to do so:—

DATES.	Manufactured at the Patna Factory; about chests.	Manufactured at the Ghazipur Factory; about chests.	Total; about chests.
On or about Tuesday, 5th September 1905 ...	2,000	2,000	4,000
On or about Tuesday, 26th September ,, ...	2,000	2,000	4,000
On or about Wednesday, 1st November ,, ...	2,000	2,000	4,000
On or about Tuesday, 5th December ,, ...	2,000	2,000	4,000
Total ...	8,000	8,000	16,000

By order of the Board of Revenue, L. P.,
H. F. SAMMAN, *Offg. Secretary.*

BOARD OF REVENUE, L. P., CALCUTTA, *the 24th June 1905.*

No. 3593½B.

NOTICE is hereby given that the Seventh Sale of Opium, the Provision of 1902-1903, will be held at the Government Opium Sale-room, No. 2 Bankshall Street, on Tuesday the 4th July 190, at 11 A.M., and will comprise 4,000 chests, viz.—

	Chests.
Opium manufactured at the Patna Factory, consisting of ...	2,000
Ditto at the Ghazipur Factory, consisting of ...	2,000
Total, ...	4,000

2nd.—The general conditions of the sale now advertised will be the same as usual. They may be ascertained by reference to the notification issued on the 22nd November 1904 and published in the *Government* and *Exchange Gazettes*, or on personal application at the office of the Board of Revenue.

3rd.—The latest dates for deposit and clearance will be the 10th and 19th July 1905, respectively, that is to say, no Bank of Bengal Receipts, Government Promissory Notes or other Public Securities that may be tendered for deposit in redemption of Promissory Notes given by purchasers in the sale-room will be received after 3-30 P.M. of Monday, the 10th July 1905, and no Bank of Bengal Receipts in full payment of lots will be accepted after 3-30 P.M. of Wednesday, the 19th July 1905.

4th.—In addition to the quantity above advertised for sale, the following quantities, more or less, of the opium manufactured at the Patna and Ghazipur Factories will be brought to sale between the sale now advertised and December next on or about the dates specified below. The Board of Revenue, however, reserve to themselves the right of altering these dates, should circumstances render it expedient to do so:—

DATES.	Manufactured at the Patna Factory; about chests.	Manufactured at the Ghazipur Factory; about chests.	Total; about chests.
On or about Tuesday, 1st August 1905 ...	2,000	2,000	4,000
On or about Tuesday, 5th September ,, ...	2,000	2,000	4,000
On or about Tuesday, 26th September ,, ...	2,000	2,000	4,000
On or about Wednesday, 1st November ,, ...	2,000	2,000	4,000
On or about Tuesday, 5th December ,, ...	2,000	2,000	4,000
Total ...	10,000	10,000	20,000

By order of the Board of Revenue, L. P.,
H. F. SAMMAN, *Offg. Secretary.*

BOARD OF REVENUE, L. P., CALCUTTA, *the 27th May 1905.*

Statement showing the quantity of salt (private property) in bonded warehouses and afloat on the river Hooghly on the 15th day of June 1905, and transactions during the half month from the 1st to the 15th June 1905.

Description of Salt.	In Bonded Warehouses in Calcutta.				Quantity afloat.	Grand Total.	Transactions during half month from the 1st to the 15th June 1905, inclusive.			
	In private golas.	In Sulkea Government golas.	In Kidderpore Dock Government golas.	Total.			Quantity on which duty has been paid.	Manifested quantity arrived in the port of Calcutta.	Deliveries from shipboard for consumption and for inland bonded warehouses.	Deliveries from bonded warehouses for consumption and for inland bonded warehouses.
		Mds.	Mds.	Mds.	Mds.	Mds.	Mds.	Mds.	Mds.	Mds.
United Kingdom—										
Liverpool and other Panga salt.	.....	1,62,457	3,46,826	5,09,283	1,10,232	6,19,515	2,33,730	2,04,101	1,49,501	1,06,916
Other European countries—										
Hamburg rock salt ...	.....	2,530	.....	2,530	.....	2,530	.....	..	1,200	.....
Ditto Bremen salt ...	.....	2,83,938	1,00,193	3,84,125	23,198	4,07,323	51,940	46,418	.....	35,075
Spanish salt	.....	1,23,748	21,008	1,44,756	.....	1,44,756	81,325	94,218	10,400	15,000
Aden and Red Sea—										
Aden salt	.....	1,03,260	15,236	1,18,496	.....	1,18,496	85,260	.....	34,480	68,250
Salif salt	.....	2,57,821	.....	2,57,821	12,999	2,70,820	50,322	.....	39,125	44,972
Do. rock salt	.....	25,010	.....	25,010	2	25,012	1,166	.....	.....	1,500
Rawayah salt	.....	2,77,855	.....	2,77,855	.....	2,77,855	3,900	.....	.....	4,250
Muscat and Persian Gulf—										
Muscat, Lingah and Hanjam salt.	.....	55,044	.....	55,044	.....	55,044	.....	.....	.....	.....
Ditto ditto rock salt	.....	2,444	.....	2,444	.....	2,444	.....	.....	.....	.....
British India—										
Bombay salt	.....	1,21,504	15,550	1,37,054	.....	1,37,054	30,101*	14,151	1,750	29,140
Madras salt	.....	.....	.....	.....	.....	.....	.....	.....	.....	.....
Coconada salt	.....	.....	.....	.....	.....	.....	.....	.....	.....	.....
Vizagapatam salt ...	.....	.....	.....	.....	.....	.....	.....	.....	.....	.....
Other places—										
Madagascar salt	.....	.....	.....	.....	.....	.....	.....	.....	.....	.....
Total ...	.....	14,15,605	4,98,813	19,14,418	1,46,431	20,60,849	5,37,750	3,58,683	2,36,406	3,65,112

Written off during the half month—

	Mds.
Wastage in private golas	Nil
Ditto in Sulkea golas	2,540
Ditto in Kidderpore Dock golas ...	2,436
Abandoned and destroyed	118

* This quantity includes 29,826 maunds Bombay karkach salt on which duty was paid at Bombay.

	Mds.
In transit—Salif salt	7,730

By order of the Board of Revenue, L. P.,

B. FOLEY,

Offg. Collector of Customs.

CALCUTTA CUSTOM HOUSE, *the 27th June 1905.*

ELECTION OF MUNICIPAL COMMISSIONERS

NOTIFICATION.

IT is hereby notified for general information that a bye-election will be held, under section 27 of Act III (B.C.) of 1884, on Monday, the 31st July 1905, for the purpose of electing a Commissioner for Ward No. I of the Rampur Boalia Municipality, in the district of Rajshahi, *vice* Munshi Hesharatulla, who has been removed from the list of Commissioners under section 20 (*d*) of the Act.

C. R. MARINDIN, *Commissioner.*

COMMR.'S OFFICE, RAJSHAHI DIVN., DARJEELING, *the 17th June 1905.*

NOTIFICATION.

IT is hereby notified for general information that in the bye-election held on the 9th June 1905 in Ward III of the Khirpai Municipality, Babu Sriram Chandra Biswas was duly elected as a Commissioner in the place of Babu Ramdhan Pahari, deceased.

N. L. BAGCHI, for *Commissioner.*

COMMR.'S OFFICE, BURDWAN DIVISION, CHINSURA, *the 19th June 1905.*

NOTIFICATION.

IT is hereby notified for general information that at the bye-election held on Monday, the 29th May 1905, Maulvi Abul Fazal Khan was duly elected a Commissioner in Ward No. 1 of the Sasaram Municipality in the district of Shahabad, *vice* Shah Fasihuddin Ahmad, deceased.

C. R. MARRIOTT, *Additional Commissioner.*

PATNA COMMR.'S OFFICE, BANKIPORE, *the 17th June 1905.*

NOTIFICATION.

IT is hereby notified for general information that the 14th August 1905 has been fixed for holding a bye-election for the election of a Commissioner for the Bazitpur Municipality, in the place of Babu Tarak Chandra Mukherjee, removed.

T. INGLIS, *Commissioner.*

COMMR.'S OFFICE, DACCA DIVN., *the 22nd June 1905.*

NOTIFICATION.

IT is hereby notified for general information that, under rule 21 (*b*) of the revised Dispensary Manual, the following gentlemen have been appointed members of the Committee for the management of the Charitable Dispensary at Arrah, in the district of Shahabad:—

1. The District Magistrate and Chairman, District Board,—*Chairman.*
2. The Civil Surgeon of the district of Shahabad.
3. Mr. H. Edwards.
4. Babu Chaturbhuj Sahai.
5. „ Siva Saran Lal.
6. Chaudhri Karamat Hussain.
7. BabuSachita Nand Sahai.
8. „ Harsoo Prasad Singh.
9. Chaudri Badruddin.
10. Babu Jwala Prasad.
11. „ Dwarka Nath Mattey.
12. „ Deokumar Prasad.
13. „ Raghubir Saran.
14. „ Gopal Saran Singh.
15. „ Hari Kishun Rai.
16. Moulvi Sher Ali.
17. „ Mohammad Rauf.
18. Babu Nand Bahadur Singh.

P. C. LYON, *Offg. Commissioner.*

PATNA COMMR.'S OFFICE, BANKIPUR, *the 19th June 1905,*

NOTIFICATION.

IT is hereby notified for general information that, under Rule 21 (*b*) of the Manual of Rules for the management of Charitable Hospitals and Dispensaries in Bengal, the following gentlemen are appointed to be members of the Committee for the management of the Charitable Dispensary at Bhadrak, in the district of Balasore:—

1.	Subdivisional Officer	President.
2.	Civil Surgeon	Member.
3.	Babu Bhagbat Prosad Mahapatra	Vice-President.
4.	Sub-Deputy Collector	Secretary.
5.	Sub-Registrar	Member.
6.	Munsif of Civil Court	Ditto.
7.	Khasmahal Tahsildar	Ditto.
8.	Babu Ganapati Das	Ditto.
9.	Munshi Latifar Rahaman Ahmad	Ditto.

E. F. GROWSE, *Commissioner.*

COMMR.'S OFFICE, CUTTACK, *the 21st June 1905.*

NOTIFICATION.

IT is hereby notified for general information that the following gentlemen have been appointed members of the Committee for the management of the Charitable Dispensary at Daudnagar in the district of Gaya, in supersession of those appointed by notification dated the 5th May 1905, published at page 904, Part I of the *Calcutta Gazette*, dated the 17th May 1905:—

1. The Subdivisional Canal Officer, Daudnagar,—(*Ex-officio*) President.
2. Babu Bisesar Puri.
3. Moulavi Abdul Gafur.
4. M. Syed Md. Ekbal Hasain.
5. M. Shah Harat Hasain.
6. Babu Raja Ram.
7. „ Raghunath Sahai.

C. R. MARRIOTT, *Additional Commissioner.*

PATNA COMMR.'S OFFICE, BANKIPORE, *the 23rd June 1905.*

The Calcutta Gazette.

WEDNESDAY, JUNE 28, 1905.

PART IA.

Orders and Notifications by the Government of India, &c.

[*Reprinted from the "Gazette of India."*]

The following orders, issued by the Government of India in the Home Department, are republished for general information.

H. W. C. CARNDUFF,
Offg. Secy. to the Govt. of Bengal.

NOTIFICATIONS.

JUDICIAL.

Simla, the 23rd June 1905.

No. 950.—The Hon'ble Mr. Justice Harington, a Judge of the High Court of Judicature at Fort William in Bengal, is granted privilege leave for one month, with effect from the 1st August 1905.

ECCLESIASTICAL.

The 23rd June 1905.

No. 245.—The Most Reverend R. S. Copleston, D.D., Bishop of Calcutta and Metropolitan in India and the Island of Ceylon, has obtained furlough for three months, with effect from the 8th July 1905, or the subsequent date on which he may avail himself of it.

H. A. STUART,
Offg. Secy. to the Govt. of India.

The following order, issued by the Government of India in the Military Department, is republished for general information.

H. W. C. CARNDUFF,
Offg. Secy. to the Govt. of Bengal.

Simla, the 23rd June 1905.

"LONDON GAZETTE."

No. 539.—The following extracts are published for general information.

"*London Gazette*," *dated 21st February 1905, page 1281.*

WAR OFFICE,
Pall Mall, 21st February 1905.

INDIAN MEDICAL SERVICE.

BENGAL.

Lieutenant-Colonel Gerald Bomford, M.D., C.I.E., to be Surgeon-General. Dated 1st January 1905.

VOLUNTEER CORPS.

RESIGNATIONS.

Behar Light Horse.

No. 556.—Major Herbert Edwards Cox resigns his commission.

H. B. B. WATKIS, *Colonel,*
Offg. Secy. to the Govt. of India.

The Calcutta Gazette.

WEDNESDAY, JUNE 28, 1905.

PART IB.

ORDERS BY THE LIEUT.-GOVERNOR OF BENGAL.

MUNICIPAL AND LOCAL.

NOTIFICATIONS,

No. 1027T.M.—The 10th June 1905.—Whereas a Notification No. 1451M., dated the 16th March 1905, was published at page 54, Part IB of the *Calcutta Gazette* of the 22nd March 1905, declaring the intention of the Lieutenant-Governor to extend the provisions of section 241 of the Bengal Municipal Act, III of 1884, to the Midnapore Municipality, in the district of Midnapore, and whereas no valid objection has been raised to the proposal within one month from the date of the publication of the above notification within the Municipality, it is hereby notified for general information that in the exercise of the power vested in the Local Government by section 221 of the Act, and in accordance with the recommendation of the Commissioners of the Midnapore Municipality, made at a meeting, the Lieutenant-Governor sanctions the extension of the above provisions of the Municipal Act to the said Municipality.

Midnapore.

No. 1228T.M.—The 21st June 1905.—Whereas a notification No. 959M., dated the 20th February 1905, was published at page 38, Part IB of the *Calcutta Gazette* of the 22nd February 1905, declaring the intention of the Lieutenant-Governor to extend the provisions of Part X of the Bengal Municipal Act III of 1884 to the Patuakhali Municipality, in the district of Backergunge, and whereas no objection has been raised to the proposal within one month from the date of the publication of the above notification within the Municipality, it is hereby notified for general information that, in the exercise of the power vested in the Local Government by section 221 of the Act, and in accordance with the recommendation of the Commissioners of the Patuakhali Municipality, made at a meeting, the Lieutenant-Governor sanctions the extension of the above provisions of the Municipal Act to the said Municipality.

Backergunge.

No. 1231T.—M.—The 21st June 1905.—It is hereby notified that, under section 19 of the Bengal Local Self-Government Act, III of 1885, the Lieutenant-Governor is pleased to appoint Mr. F. W. Needham to be a member of the District Board of Tippera, *vice* Mr. P. J. DeLanney, resigned.

Tippera.

No. 1240T.M.—The 22nd June 1905.—Whereas a notification No. 671M., dated the 3rd February 1905, was published at page 28, Part IB of the *Calcutta Gazette* of the 8th February 1905 declaring the intention of the Lieutenant-Governor to extend the provisions of Part VIII of the Bengal Municipal Act III of 1884 to the Cossipur-Chitpur Municipality, in the district of the 24-Parganas, and whereas no valid objection has been raised to the proposal within one month from the date of the

24-Parganas.

publication of the above notification within the Municipality, it is hereby notified for general information that, in the exercise of the power vested in the Local Government by section 221 of the Act, and in accordance with the recommendation of the Commissioners of the Cossipur-Chitpur Municipality, made at a meeting, the Lieutenant-Governor sanctions the extension of the above provisions of the Municipal Act to the said Municipality.

Darjeeling.

No. 1246T.M.—The 20th June 1905.—It is hereby notified for general information that in exercise of the power conferred on him by section 138 of the Bengal Local Self-Government Act, III of 1885, the Lieutenant-Governor is pleased to make the following amendments in rules 24 and 25 of the rules made under clauses (*f*) and (*t*) of the aforesaid section of the Act and published under Notification No. 2009T.—M., dated the 9th November 1901, at pages 217-273 of Part 1B of the *Calcutta Gazette* of the 4th December 1901:—

In the second paragraph of Rule 24 omit the words "with the pass-book."

In rule 25, line 4, after the words "to the treasury," insert the words "on the tenth and also," and after the words "every month" insert the words "and on any other day on which the District Board may require the posting to be done." In line 6 after the words "entered therein, and" insert the words "when the book is received on the last working day of the month." In line 8 omit the words "at once" after the words "be returned," and insert the words "as soon as the entries prescribed in this rule have been made in it, *i.e.*, on the day of receipt or the next day at latest."

Rules 24 and 25 after amendment will stand thus:—

"24. All money paid into the treasury otherwise than by money-order to the credit of the District Fund, whether by servants of the District Board or others, shall be accompanied by a chalan in Form No. II.

"This chalan shall be in triplicate, having the words 'Original,' 'Duplicate' and 'Triplicate' printed or written in red on the first, second and third parts, respectively. The first part shall be retained by the treasury office, the second part shall be returned on the same day to the office of the District Board, and the third part shall be delivered to the person paying in the money.

"As an exception to the above rule, the payments into the treasury of the rents of pounds and ferries which are administered by Local Boards shall be accompanied by chalans in quadruplicate, and the fourth part shall be sent by the treasury to the office of the Local Board."

"25. All moneys remitted to the treasury to credit of the District Board, and all payments made by the treasury on cheques or otherwise on account of the District Board, shall be entered in a pass-book; the pass-book shall remain in the custody of the Chairman, and it shall be sent to the treasury on the tenth and also on the last working day of every month and on any other day on which the District Board may require the posting to be done. On receipt of the pass-book by the treasury officials, the receipts and payments up to date, and credits referred to in rules 30 and 31, shall be entered therein, and when the book is received on the last working day of the month the account shall be balanced and signed by the treasury officer, the amount being entered in words as well as figures. The book shall be returned to the office of the District Board as soon as the entries prescribed in this rule have been made in it, *i.e.*, on the day of receipt or the next open day at latest."

Bhagalpur.

No. 1251T.M.—The 22nd June 1905.—It is hereby notified that, under section 19 of the Bengal Local Self-Government Act, III of 1885, the Lieutenant-Governor is pleased to appoint Mr. G. H. Grant to be a member of the District Board of Bhagalpur, *vice* Mr. Tilakdhari Lall, resigned.

Purnea.

No. 1261T.M.—The 22nd June 1905.—It is hereby notified that, under section 19 of the Bengal Local Self-Government Act, III of 1885, the Lieutenant-Governor is pleased to appoint Babu Jai Narain Misser to be a member of the Kishanganj Local Board, in the district of Purnea, *vice* Babu Hira Lall Misser, deceased.

Cuttack.

No. 1263T.M.—The 22nd June 1905.—In exercise of the power conferred on the Local Government by section 53, clause 3 of the Calcutta Hackney Carriage Act, II of 1891, the Lieutenant-Governor is pleased to confirm the following bye-laws which have been made by the Commissioners of the Cuttack Municipality, in the district of Cuttack, under clause (2) of the said section in supersession of the bye-laws confirmed in Notification No. 3050M., dated the 29th July 1895, published at page 173, Part 1B of the *Calcutta Gazette* of the 31st idem:—

A.—FIRST CLASS.

1. First class hackney carriage licenses shall only be granted for comfortable, roomy, clean, easy-running vehicles of a description superior in all respects to second class carriages. They may be of any approved pattern, such as broughams, landaus, phaetons, office jaunts, &c., &c. Each carriage must have a thoroughly good pair of lamps.

2. No carriage drawn by a pair of horses shall be licensed in the first class unless both animals are fit for their work and at least 14-2 hands high, and none drawn by a single horse unless the animal is fit for its work and at least 15 hands high.

B.—SECOND CLASS.

1. No carriage shall receive a second class license unless it be in a thoroughly fit and proper condition.

2. If it be of a kind known as "Palki-gharry" or "Brownberry" it shall conform to the following dimensions:—

Breadth of carriage inside	...	...	Not less than 33 inches.
Depth of seat	...	...	Eighteen inches.
Width of well of carriage between cushions		...	Not less than 20 inches.
Height of roof above cushions	...	...	Not less than 38 inches.

3. The springs and axles must be of thoroughly strong manufacture, all the iron work strongly put together, and the carriage must have a good pair of lamps.

4. No carriage drawn by a pair of horses shall be licensed in the second class unless both animals are fit for their work and at least 12-2 hands or 50 inches high, and none drawn by a single horse unless the animal is fit for its work and at least 13-2 hands or 54 inches high.

C.—THIRD CLASS.

1. No carriage shall receive a third class license unless it be in a clean and safe condition, have sufficient room inside to seat four persons conveniently, and have stout axles, springs, and wheels and a good pair of lamps.

2. When drawn by a pair of ponies, each pony must be in a fit condition, and not less than 11-2 hands or 46 inches high When drawn by a single pony the animal must be fit and at least 13 hands or 52 inches high.

3. Carriages of the description known as tem-tom or dog-carts shall be registered in the third class.

D.—GENERAL.

1. No animal shall be deemed fit for its work unless it is so in respect of height, bone, muscle and condition and equal to the work of drawing the carriage.

2. Harness must be of good description and strong. No chain or rope traces, unless they be covered with leather, and no string fastenings will be allowed.

3. Every carriage of all three classes shall have a plate affixed in some conspicuous part of the outside of the carriage specifying the class, the number of each class in the register, and the number of persons it be licensed to carry. A second and third class carriage shall also bear the owner's name painted on some conspicuous parts of the outside of the carriage. Every carriage shall be distinctly marked on its panels with the number of the class to which it belongs, figures to be not less than 6 inches in length, resembling the marking of railway carriages.

4. It shall be obligatory on the owner of every hackney carriage to produce within 24 hours every horse or vehicle registered under the Hackney Carriage Act when required to do so by the Registering Officer, failing which the working of the vehicle or horse shall be suspended for a period not exceeding a month.

5. Every person applying for a driver's license must be acquainted with the principal places and streets in Cuttack and have a thorough knowledge of the rates and fares in the schedule.

6. A schedule of fares by distance and time for each class shall be printed and affixed to a metal plate which should be hung up in a conspicuous place in each hackney carriage.

7. Each driver and syce must be properly dressed in clean uniform.

The syce should invariably be in attendance whenever a hackney carriage is being plied.

8. Every place where any hackney carriage or horse is kept shall be open to inspection of the officers of the Municipality at all reasonable hours.

9. On the day fixed for granting licenses to, or examination of hackney carriages, all owners of hackney carriages should produce their carriages and animals at the place and hour appointed for the purpose.

Darbhanga.

No. 1271T.M.—The 22nd June 1905.—It is hereby notified that, under section 27 of the Bengal Municipal Act, III of 1884, the Lieutenant-Governor is pleased to appoint Babu Sarat Chandra Sen to be a Commissioner of the Darbhanga Municipality, in the district of Darbhanga.

Dinajpur.

No. 1275T.M.—The 23rd June 1905.—It is hereby notified that, under clause 2, section 6 of the Bengal Local Self-Government Act, III of 1885, the Lieutenant-Governor intends to establish a Local Board in the Balurghat subdivision of the district of Dinajpur, unless good reasons are shown to the contrary within one month from the date of the publication of this notification within the area affected.

No. 1288T.—M.—The 24th June 1905.—Under Rule 9 of the rules framed under section 5 of the Local Authorities Loan Act, 1879, it is hereby notified for general information that the Lieutenant-Governor intends to sanction the following application from the Commissioners of the Darjeeling Municipality for a loan of Rs. 33,000 from Government, bearing interest at the rate of 4 per cent. per annum, and repayable in 40 equal half-yearly instalments of Rs. 1,206-5-4 each, unless good reasons are shown to the contrary within one month from the date of the publication of this notification within the said Municipality.

DARJEELING MUNICIPALITY.

Application from the Municipal Commissioners of Darjeeling for a Loan of Rs. 33,000.

	Rs.
For the New Water-Works and Refilling Tank in addition to the Loan of Rs. 1,66,000 already obtained	22,656
For connecting sprigs Nos. 1 and 3 at Bencha] to the new water-supply	10,000
Total ...	32,656

Rs. 33,000 (rupees thirty-three thousand only).

Municipal Funds, viz.—Rates, Rents, Taxes and Market fees.

Act III (B.C.) of 1903 and Government orders selecting lands and rents to the Municipality.

Twenty years

(4) Four per cent. per annum.

One instalment.

Rs. 33,000

16th August 1905

Forty equal half yearly instalments payable on the 15th February and 15th August in each successive year commencing with 1906 till the loan is paid off.

Rs. 1,30,8-8.

RECEIPTS OF LOAN. (a)	(b)	(c)	(d)	(e)	(f)	DEPAYMENT OF LOAN. (f)	(g)
The work or works for construction or repairs of which the loan is required and an estimate of the cost thereof.	The amount which it is proposed to borrow.	The fund or funds on the security of which it is proposed to borrow.	The law or laws under which the said fund or funds is or are levied, received or held.	The period for which the loan is required.	Rate of interest.	The number of the instalments, if any, in which it is proposed that the Loan should be taken.	The amount of each instalment.	The date proposed for receiving such instalment.	Date of instalments, if any.	Amount of each instalment.	All existing prior charges upon the funds of the local authority.
1	2	3	4	5	6	7	8	9	10	11	12

A.—Detailed Account of the Revenue and Expenditure of the Local Authority for the three last preceding years.

Source from which the Revenue was derived.	1901-1902.	1902-1903.	1903-1904.	Object on which the expenditure was incurred.	1901-1902.	1902-1903.	1903-1904.	Amount for 1904-1905.	Amount for 1905-1906.
13	14	15	16	17	18	19			
Balance at the close of the year ...	23,376	23,544	25,534	*General Administration.*					
A.—Municipal Rates and Taxes, &c.				Office Establishment	14,431	13,973		14,154	
1. Tax on houses and lands ...	46,142	45,377	46,103	Collection of Taxes, &c.	7,506	7,279		7,641	
2. Tax on animals, &c., and cart ...	1,331	1,144	1,397	Survey of Lands	521	111		426	
3. Tax on occupation fees ...	911	911	1,016	Refunds	1,079	555		611	
4. Tolls	995	1,144	1,227	Pensions and gratuities	...	...		90	
5. Water-rate	18,305	18,849	19,221	*Public Safety*					
6. Lighting-rate	33,040	33,003	26,991	Fire	3,946	3,946		40	
7. Conservancy (Scavenging and Latrine).	21,786	21,480	22,767	Lighting	40,076	40,076		26,666	
8. Other, &c. (Penalties)	91	97	156	Rewards for destruction of wild animals	12	12		25	
B.—Realisations under Special Acts				*Public Health.*					
1. Pound		60	73	Water-supply { Capital outlay	947	90,699		91,382	
2. Fees from Porters' and 'Dandy-walas' Act		64	84	{ Refds. and repair ...	6,446	6,095		7,070	
3. Vaccination fees	64	7	61	Drainage ... { Capital outlay ...	211	319		3,977	
C.—Receipts derived from Municipal Property and Powers apart from Taxation.				{ Refds. and repairs	656	140		1,366	
1. Rents of lands, houses, &c.	41,986	41,661	42,311	Conservancy—methodist road cleaning and watering and latrines	44,539	44,530		46,443	
2. Sale proceeds of lands, &c.	2,139	2,100	1,554	Honorific and dispensaries	11,021	10,210		10,216	
3. Conservancy Receipts	430	338	367	Vaccination	676	592		592	
4. Contract Revenue from Medical Institutions	1,701	2,321	4,403	Markets and Slaughter-houses ...	1,130	66		1,460	
5. Ditto from Markets and Slaughter-houses	7,946	8,712	8,709	Pounds	14	3		1	
6. Others—Licenses under sections 281 of Act III (B.C.) of 1884 ...	1,131	1,223	913	Arboriculture	1,453	1,713		1,887	
7. Fines under Municipal Acts, &c. ...	3,709	3,411	1,256	Public Works { Establishment	6,664	6,113		7,694	
8. Interest on Investment				{ Buildings ...	2,305	2,504		4,764	
D.—Grants and Contributions				Roads	4,305	11,015		14,238	
1. From Government for general purposes	...	... 300	500	*Public Instruction.*					
2. Ditto Local Funds for ditto ...	...	...	500	Schools and Colleges	...	100		1,200	
3. Ditto other sources	...	...		Contributions	...	1,300		165	
E.—Miscellaneous.				Libraries and Museums, &c. ...	...	...			
1. Recoveries on account of services rendered to private individuals	2,360	2,178	2,546	*Miscellaneous.*					
2. Other items	5,465	660	653	Interest on loans	18,505	19,785		19,151	
F.—Extraordinary and Debt.				Actual cost of works for private person	1,417	2,401		2,273	
1 Sale proceeds of Government securities	30,000	30,000	33,000	{ Printing	2,196	1,427		1,625	
2 Loans from Government	87,540	87,540	15,139	Law charges	1,170	1,066		984	
3 Advances	14,711	9,944	9,42	Other items — { Pound	699	699		757	
4 Deposits	257 6			{ Provident contribution ...	5,350	886		1,270	
				{ Sundries					
				Extraordinary and debt.					
				Investment	3,000				
				Re-payment of loans	11,471	13,697		14,551	
				Advances	27,267	8,651		26,758	
				Deposits	5,350	1,266		6,966	
Total Income	3,13,741	3,01,758		Total expenditure	2,31,510	2,57,207		2,14,621	
				Closing balance	25,534	25,534		67,676	
				Grand total ...	2,56,056	3,12,741		3,31,1	

Balance of Government loan of Rs. 30,000 ... Rs. 19,444 16 7

Ditto ditto ditto ... 30,000 ... 15,185 15 11

Ditto ditto ditto ... 31,000 ... 16,136 11 0

Ditto ditto ditto ... 30,000 ... 20,000 0 0

Ditto ditto ditto ... 30,000 ... 30,000 0 0

Ditto ditto ditto ... 1,30,000 ... 1,11,800 4 4

Ditto ditto ditto ... 30,000 ... 22,222 14 3

Ditto ditto ditto ... 3,00,000 ... 1,88,888 9 6

Ditto ditto ditto ... 30,000 ... 14,027 12 0

Ditto ditto ditto ... 1,03,945 ... 55,555 0 0

Rs. 4,98,954 3 1

No. 1325T.M.—The 26th June 1905.—Under Rule 9 of the Rules framed under section 5 of the Local Authorities Loan Act, 1879, it is hereby notified for general information that the Lieutenant-Governor intends to sanction the following application from the Commissioners of the Howrah Municipality for a loan of Rs. 50,000 from Government, bearing interest at the rate of four per cent. per annum and repayable in forty equal half-yearly instalments of Rs. 1,827-12-5 each, unless good reasons are shown to the contrary within one month from the date of the publication of this notification within the said Municipality.

Howrah.

HOWRAH MUNICIPALITY.

Application from the Commissioners of the Howrah Municipality for raising a loan of Rs. 50,000.

The work or works for the construction or repairs of which the loan is required the estimate of the cost thereof.	The amount which it is proposed to borrow.	The fund or funds on the security of which it is proposed to borrow.	The law or laws under which the said fund or funds is or are levied, received or held.	Receipt of loan. A. The period for which the loan is required.	B. Rate of interest.	C. The number of instalment, if any, in which it is proposed that the loan should be taken.	D. The amount of each instalment.	E. The date proposed for receiving such instalment.	Repayment of loan. F. Amount of each instalment. Date of instalment, if any.	Amount.	A detailed account of the revenue and expenditure of the local authority for the last three preceding years. Revenue. Sources from which the revenue was derived.	Amounts for 1901-1902.	Amounts for 1902-1903.	Amounts for 1903-1904.	Expenditure. Objects on which the expenditure was incurred.	Amounts for 1901-1902.	Amounts for 1902-1903.	Amounts for 1903-1904.	All the existing prior charges upon the funds of the local authority.
1	2	3	4	5	6	7	8	9	10	11	12	13	14	15	16	17	18	19	20
Water works extension (3rd), the estimated cost of which is Rs. 45,460.	Rs. 50,000.	Howrah Municipality.	Bengal Municipal Act, III (B.C.) of 1884.	Twenty years.	4 per cent.	One instalment.	Rs. 50,000.	The 15th August 1905.	The loan to be repaid in forty equal half-yearly instalments, payable on the 15th February and 15th August in each succeeding year commencing with the year 1906 till the loan is paid off.	Rs. 1,827-12-5.		Rs.	Rs.	Rs.		Rs.	Rs.	Rs.	(1) Loan of Rs. 50,000 for Conservancy Tramway, of which Rs. 58,787 paid into the Sinking Fund. (2) Loan of Rs. 15,00,000 for water-works (loan repayable by instalments of 30 years) of which 15 instalments have been paid. (3) Loan of Rs. 40,000 (loan of 20 years), of which 12 instalments have been paid. (4) " " 50,000 " 30 " " 8 " " (5) " " 21,000 " 20 " " 3 " " (6) " " 17,000 " 10 " " 3 " " (7) " " 75,000 " 30 " " 3 " " (8) " " 80,000 " 30 " " 3 " "
											Balance	10,623	14,386	2,14,308	General Administration and collection charges.	43,981	44,818	50,614	
											Municipal Rates and Taxes.	4,98,558	5,14,094	5,37,435	Public Safety	78,692	82,751	70,215	
											Realisations under special Acts.	7,190	9,307	11,545	Public Health and Convenience.	3,38,958	3,16,480	3,89,982	
											Revenue derived from Municipal property and powers apart from taxation.	41,117	44,030	51,995	Public Instruction	3,971	4,404	4,694	
											Grants and contributions for general and special purposes.	46,593	17,309	1,286	Miscellaneous	97,920	91,115	94,102	
											Miscellaneous	3,715	5,608	5,326	Extraordinary and Debt ...	52,196	56,737	3,58,878	
											Extraordinary and Debt	12,268	2,07,889	3,63,125	Closing balance	14,386	2,14,308	2,16,515	
											GRAND TOTAL ...	6,38,064	8,10,613	11,85,000	GRAND TOTAL ...	6,30,064	8,10,613	11,85,000	

No. 1326T.M.—The 26th June 1905.—Under Rule 9 of the rules framed under section 5 of the Local Authorities Loan Act, 1879, it is hereby notified for general information that the Lieutenant-Governor intends to sanction the following application from the Commissioners of the Howrah Municipality for a loan of Rs. 60,000 from Government, bearing interest at the rate of four per cent. per annum, and repayable in forty equal half-yearly instalments of Rs. 2,193-5-3 each, unless good reasons are shown to the contrary within one month from the date of the publication of this notification within the said Municipality.

Howrah.

HOWRAH MUNICIPALITY.

Application from the Commissioners of the Howrah Municipality in the district of Hooghly for a Loan of Rs. 60,000.

The work or works for the construction or repairs of which the loan is required, the estimate of the cost thereof.	The amount which it is proposed to borrow.	The fund or funds on the security of which it is proposed to borrow.	The law or laws under which the said fund or funds is or are levied, received or held.	RECEIPT OF LOAN. a: The period for which the loan is required.	b: Rate of Interest.	c: The number of instalments, if any, in which it is proposed that the loan should be taken.	d: The amount of each instalment.	e: The dates proposed for receiving each such instalment.	REPAYMENT OF LOAN. f: Amount of each instalment. Date of instalment, if any.	Amount.	A DETAILED ACCOUNT OF THE REVENUE AND EXPENDITURE OF THE LOCAL AUTHORITY FOR THE LAST THREE PRECEDING YEARS. Revenue. Sources from which the revenue was derived.	Amounts for 1901-02.	Amounts for 1902-03.	Amounts for 1903-04.	Expenditure. Objects on which the expenditure was incurred.	Amounts for 1901-02.	Amounts for 1902-03.	Amounts for 1903-04.	All existing prior charges upon the funds of the Local Authority.
1	2	3	4	5	6	7	8	9	10	11	12	13	14	15	16	17	18	19	20
New reservoir at Shibpur, the estimated cost of which reservoir and pipe Rs. 56,000 Land ... 4,000 Total ... 60,000	Rs. 60,000.	Howrah Municipality.	Bengal Municipal Act, III of 1884.	Twenty years.	Four per cent.	One instalment.	Rs. 60,000.	15th August 1905.	The loan to be repaid in forty equal half yearly instalments, payable on the 15th February and 15th August in each succeeding year commencing with the year 1906 till the loan is paid off.	Rs. 2,192-5-3.	Balance	Rs. 10,623	Rs. 14,386	Rs. 2,14,208	General Administration, and collection charges.	Rs. 43,981	Rs. 44,818	Rs. 50,614	(1) Loan of Rs. 50,000 for Conservancy Tramway of which Rs. 43,757 paid into the sinking fund.
											Municipal rates and taxes.	4,98,556	5,14,094	5,37,435	Public Safety	78,682	82,751	70,215	(2) Loan of Rs. 13,60,000 for Water-works (loan repayable by instalments of 30 years) of 15 instalments have been paid.
											Realisations under Special Acts.	7,190	9,307	11,845	Public Health and Convenience.	3,35,956	3,14,480	3,89,982	(3) Loan of Rs. 40,000 (loan of 20 years), of which 13 instalments have been paid.
											Revenue derived from municipal property and powers apart from taxation.	41,117	44,020	51,986	Public Instruction ...	3,971	4,404	4,694	(4) Loan of Rs. 50,000 (loan of 20 years), of which 8 instalments have been paid.
											Grants and contributions for general and special purposes.	46,592	17,309	1,286	Miscellaneous ...	97,920	91,116	94,152	(5) Loan of Rs. 21,000 (loan of 20 years), of which 3 instalments have been paid.
											Miscellaneous ...	3,715	3,608	5,236	Extraordinary and Debt.	52,196	56,737	3,56,878	(6) Loan of Rs. 17,000 (loan of 10 years), of which 3 instalments have been paid.
											Extraordinary and Debt.	22,368	2,07,589	3,63,123	Closing Balance ...	14,386	2,14,208	2,16,615	(7) Loan of Rs 75,000 (loan of 20 years), of which 2 instalments have been paid.
											Total ...	6,89,064	8,10,613	11,85,000	Total ...	6,39,064	8,10,613	11,85,000	(8) Loan of Rs. 80,000 (loan of 20 years), of which 2 instalments have been paid.

No. 1317 T.M.—The 26th June 1905.—It is hereby notified that, under section 19 of the Bengal Local Self-Government Act, III of 1885, the Lieutenant-Governor is pleased to appoint Babu Upendra Lal Roy to be a member of the District Board of Chittagong, *vice* Rai Nittyananda Roy Bahadur, resigned.

Chittagong.

No. 1320 T.M.—The 26th June 1905.—It is hereby notified that, under section 19 of the Bengal Local Self-Government Act, III of 1885, the Lieutenant-Governor is pleased to appoint Maulvi Mohamed Waheed to be a member of the Samastipur Local Board, in the district of Darbhanga, *vice* Babu Harbans Sahai, deceased.

Darbhanga.

The Calcutta Gazette.

WEDNESDAY, JUNE 28, 1905.

PART II.

Advertisements.

N. B.—Advertisements, Notices, &c., intended for insertion in this part of the Gazette cannot be received after Noon on Monday.

LAND SALE NOTICES.

Notification A.

NOTICE is hereby given, under sections 6 and 13, Act XI of 1859, that the undermentioned estates and shares of estates in the district of Puri will be put up for sale at the office of the Collector of that district on the *10th July 1905* at 12 noon for arrears of revenue and other demands which by law are realizable arrears of land revenue.

When in columns 5, 7 and 9 of the appended statement it is stated that only a share is to be sold, it is to be understood that a separate account is kept for that share, and that the other share or shares in the estate not specifically mentioned in column 5 are excluded from the sale.

Tauzi No.	Name of mahal and pargana.	Sadar jama of whole estate.	Whether the whole estate is to be sold	If only a share is to be sold, specification of such share or shares	Names of proprietors of property to be sold.	If only a share is to be sold, the sadar jama of such share.	If the whole estate is to be sold, the arrears due from it.	If only a share is to be sold, the arrears due from it.
1	3	3	4	5	6	7	8	9
		Rs. A. P.				Rs. A. P.	Rs. A. P.	Rs. A. P.
166 / 3	Taluk Ganeswarpur, pargana Banchas	1619 0 0	....	Kismat 7a.	Chandramoni Debya, mother and guardian of Hanuman Khuntia (minor).	769 8 0	...	79 8 0 Due for kist April 1905
139	Killa Kokai, pargana Chabiskud.	1,706 0 0	Whole ...	.. ..	Balaram Das Bhagat and others.	.....	854 0	Ditto
236 / 1	Taluk Lakshmiprasad, pargana Kurtow.	1,050 0 0	.....	Kismat 8a 7p. 2k. 15b.	Jagannath Sahu and others ...	552 15 0	.....	5 5 0 Due for kist April 1905

Puri Collectorate, the 30th May 1905.

J. R. BLACKWOOD, Collector.

Notification A.

NOTICE is hereby given, under sections 6 and 13, Act XI of 1859, that the undermentioned estates and shares of estates in the district of Chittagong will be put up for sale at the office of the Collector of that district on the 17th July 1905 at 12 noon for arrears of revenue and other demands, which by law are realizable as arrears of land revenue.

When in columns 5, 7 and 9 of the appended statement it is stated that only a share is to be sold, it is to be understood that a separate account is kept for that share.

Tauzi No.	Name of mahal and pargana.	Sadar jama of whole estate.	Whether the whole estate is to be sold.	If only a share is to be sold, specification of such share or shares.	Names of proprietors of property to be sold.	If only a share is to be sold, the sadar jama of such share.	If the whole estate is to be sold, the arrears due from it.	If only a share is to be sold, the arrears due from it.
1	2	3	4	5	6	7	8	9
		Rs. A. P.				Rs. A. P.	Rs. A. P.	Rs. A. P.
391/391/387	Thana Satkania, taraf mauza Amirabad Babait taraf Mangatram Hazari.	1,401 13 3	Only a share is to be sold.	Residuary share No. 8 ...	Taran Sing Hazari and Sm. Golap Kumari Thakurani.	908 15 8	.....	170 4 11
392/392/388	Thana Bhatiary, taraf Ahamedullah Nasarullah.	730 14 5	Whole estate is to be sold.	.....	Fazal Rohaman and Rajjab Ali.	.....	128 8 2	.....

NOTE.—The figures shown in columns 8 and 9 represent the arrears remaining unpaid on the 25th May 1905.

Chittagong Collectorate, the 8th June 1905. F. P. DIXON, Collector.

Notice.

NOTICE is hereby given, under sections 6 and 13 of Act XI of 1859, that the undermentioned estate and share of estate in the district of the 24-Parganas will be put up for sale at the office of the Collector of that district on the 17th July 1905, at 12 o'clock noon, for arrears of revenue and other demands which by law are realised as arrears of land revenue.

When in columns 5, 7 and 9 of the appended statement it is stated that only a share is to be sold, it is understood that separate account is kept for that share and that the share or shares are excluded from sale.

Consecutive number.	Tauzi No.	Name of pargana and mahal.	Sadar jama for the whole estate.	Whether the whole estate is to be sold.	If only a share is to be sold, the specification of such share.	Names of proprietors of properties to be sold.	If only a share is to be sold, the sadar jama of such share.	If the whole is to be sold, the arrears due from it.	If only a share is to be sold, the arrears due from it.
1	2	3	4	5	6		8	9	10
			Rs. A. P.				Rs. A. P.		Rs. A. P.
1	392/1	Azimabad, kismat Hudajoy-Chandipore.	3,313 7 8	.....	Excluding 12as. share, remaining 4as. share.	Radhabinode Mandal and others.	2,078 5 11	.....	71[illegible] 1 [illegible]

Alipore, the 8th May 1905. BHUPATI CHAKRAVARTTI, for Collector.

Notice of Sale for Arrears of Revenue.

NOTICE is hereby given, under section 6, Act XI of 1859, read with Act VII (B.C.) of 1868 and Act II (B.C.) of 1871, that the undermentioned noabad taluks within the Patia khas mahal, in the district of Chittagong, will be put up to public and unreserved sale at the Collector's office of that district on the 14th July 1905 for arrears and cesses remaining unpaid on the 25th May 1905 :—

No. of tenure.	Name of mauza, thana, and mahal.	Name of talukdar.	Sadar jama.		Amount of arrears for which the tenure is to be sold.		
			Rent.	Cesses.	Rent.	Cesses.	Total.
			Rs.	Rs. A. P.	Rs. A.	Rs. A.	Rs. A.
1/6749/392	Thana Patia, mauza Dhopachari, mahal Noabad taluk Keramat Ali Kamalapru.	Chalafura Choudhury, son of Romang Kamalinga Choudhury of Bandarban.	844	48 9 6	316 8	16 0	332 8
14141/19397	Thana Patia, mauza Charichanagar, mahal Noabad taluk Ochman Sadagar and Eakup.	Raj Chandra Sen, son of Ramkishore Sen of Sanharah and Shariutulla Sadagar.	520	14 13 0	195 2	8 9	200 11

Chittagong, the 10th June 1905. J. J. BARNIVILLE, Covenanted Deputy Collector in charge.

Notification B.

NOTICE is hereby given, under sections 6 and 13, Act XI of 1859, that unless the arrears mentioned below are paid on or before the next latest date of payment, viz., the 28th April 1905, the undermentioned estates or shares of estates in the district of Puri will be put up for sale at the office of the Collector of that district on the 10th July 1905 at 12 o'clock noon for the said arrears.

When in columns 5, 7 and 9 of the appended statement it is stated that only a share is to be sold, it is to be understood that a separate account is kept for that share and that the other share or shares in the estate not specifically mentioned in column 5 are excluded from the sale.

Tauzi No.	Name of mahal and pargana.	Sadar jama of whole estate.	Whether the whole estate is to be sold.	If only a share is to be sold, specification of such share or shares.	Names of proprietors of property to be sold.	If only a share is to be sold, the sadar jama of such share	If the whole estate is to be sold, the arrears due from it.	If only a share is to be sold, the arrears due from it.	Nature and amount of demand for which to be sold.
1	2	3	4	5	6	7	8	9	10
		Rs. A. P.		A. P.		Rs. A. P.	Rs. A. P.	Rs. A. P.	
185 3	Killah Rupas, pargana Athais.	1,689 0 0	... .	Kismat ... 9 4	Trilochan Chaudhuri and others.	985 8 0	.....	491 11 0	Due for first April 1905.
188 1	Ta. Ganeswarpur, pargana Sanchas.	1,619 0 0	.....	,, ... 9 0	Baladev Prakas Brambachari.	910 11 0	.....	455 0 0	Ditto.
188 2	Ditto ...	1,619 0 0	.....	,, ... 7 0	Chandra Moni Debya, mother and guardian of Hanuman Khentia.	708 8 0	.....	354 0 0	Ditto.
66	Ma. Durgadaspur, pargana Kotrabang.	870 0 0	Whole ...	.....	Raja Mahund Dev ..		439 0 0	.....	Ditto.
79 6	Ma. Thanthana, pargana Kotrabang.	653 0 0	.....	Kismat ... 13 0	Dinanandhu Pain, brother and guardian of Gopi Nath Pain and others.	830 9 0	.....	264 14 0	Ditto.
347	Ta. Amuri, pargana Purbedual.	1,216 0 0	.....	,, ... 8 0	Nayanmali Jenadie, mother and guardian of Dursa Charan Jagadeb Rai.	608 0 0	.....	304 0 0	Ditto.
347 2	Ditto ...	1,216 0 0	.....	,, ... 8 0	Radha Mohan Rai ...	608 0 0	.....	304 0 0	Ditto.

Puri Collectorate, the 7th April 1905. J. F. BLACKWOOD, Collector.

Notification B.

NOTICE is hereby given under section 5, Act XI of 1859, that unless the arrears mentioned below are paid on or before the next latest date of payment, viz., the 28th June 1905, the undermentioned estates or shares of estates in the district of Midnapore will be put up for sale at the office of the Collector of that district on the 30th June 1905, at 12 o'clock noon for the said arrears.

When in columns 5, 7 and 9 of the appended statement it is stated that only a share is to be sold, it is to be understood that a separate account is kept for that share, and that the other share or shares in the estate are excluded from the sale.

Tauzi No.	Name of mahal and pargana.	Sadar jama of the whole estate.	Whether the whole estate is to be sold.	If only a share is to be sold, specification of such share or shares.	Names of proprietors of property to be sold.	If only a share is to be sold, the sadar jama of such share.	If the whole estate is to be sold, the arrears due from it.	If only a share is to be sold, the arrears due from it.	Nature and amount of demand for which to be sold.
1	2	3	4	5		7	8	9	10
678	Pargana Chandrakona, mahal Kuldaha.	Rs. A. P. 10,784 7 2	.....	Separate account No. 1, 4a. 8g. 1ch. 1k. share of the mahal. All other shares than that specified will be excluded from sale.	Paran Ch. Roy and others.	Rs. A. P. 8,873 13 6	Rs. A. P.	Rs. A. P. 144 9 0	Rs. A. P. Revenue— 144 9 0
944	Pargana Kasijora, mahal Gumukpota.	3,185 0 0 including police.	.....	Separate account No. 1. 8 annas share of the mahal. All other shares than that specified will be excluded from sale.	Munimuhun Ray ...	1,592 8 0 including police.	.....	748 2 0 including police.	Revenue— 742 8 0 Police— 5 10 0 Cess— 48 15 9 Embankment— 84 0 0
2863	Pargana Sabong, mahal Palpara.	733 3 6	Entire ...	.....	Sya. Tarangini Dasi and others.	.....	171 13 6 January and March 1905.	.....	Revenue— 171 13 6 Cess— 18 14 6

Midnapore Collectorate, the May 1905. J. N. Roy, Covtd Deputy Collector in charge.

Notice of Sale for Arrears of Revenue.

NOTICE is hereby given, under section 6, Act XI of 1859, read with Act VII (B.C.) of 1868 and Act II (B.C.) of 1891, that the undermentioned Noabad taluks within the Cox's Bazar khas mahal, in the district of Chittagong, will be put up to public and unreserved sale at the Collector's office of that district on the 15th July for arrear rent and cess remaining unpaid on the 25th May 1905:—

Number of tenure.	Name of mauza, thana and mahal.	Name of talukdar.	SADAR JAMA.		AMOUNT OF ARREARS FOR WHICH THE TENURE IS TO BE SOLD.		
			Rent.	Cess.	Rent.	Cess.	Total.
			Rs. A. P.	Rs. A. P.	Rs. A. P.	Rs. A. P.	Rs. A. P.
1 189/3	Mauza Teknaf, thana Teknaf, mahal Noabad, taluk Fate Chowdhuri.	Khema Chowdhuri, Lhabako and Adafuroo.	1,374 0 0	58 19 6	254 0 0	17 9 9	271 9 9
2 309/5	Mauza Lengurbill, thana Teknaf, mahal Noabad, taluk Thau Chowdhuria.	Ditto ...	794 0 0	36 7 0	198 0 0	13 9 6	210 9 6
4 460/578/580	Mauza Dakhinuhila, thana Teknaf, mahal Noabad, taluk Ishan Chandra Chowdhuri.	Mongjai Chowdhuri and Keojai Chowdhuri.	2,381 6 0	184 8 6	446 2 0	61 13 6	507 15 6
5—1035/2	Mauza Dakhinuhila, thana Teknaf, mahal Noabad, taluk Srimati Khemeh, Mangajai and Keojai.	Fate Chowdhuri, Repchi Chowdhuri, Aungjafe Chowdhuri, Mongjai Chowdhuri, Keojai Chowdhuri, Mongjafuroo Chowdhuri, Ari Chowdhuri, Faturi Chowdhuri, Chaliapo Chowdhuri, Khemeng Chowdhuri, Mamfuroo Chowdhuri and Laturi.	1,631 8 0	70 15 6	264 0 0	33 11 0	297 11 0
69—92	Mauza Totakkha I, thana Ramoo, mahal Noabad, taluk Jafar Ali.	Srimati Rajiman Khatun	831 4 0	37 6 6	207 13 0	29 3 3	236 16 3
93—94	Mauza Patali Machhuakhali, thana Ramoo, mahal Noabad, taluk Bar Muhammad.	Srimati Jagyeswari, for her minor son, Asrur Chandra Das.	670 10 0	30 3 0	230 10 0	16 13 0	247 7 0
71—99	Mauza Patali Machhuakhali, thana Ramoo, mahal Noabad, taluk Hari Sikdar.	Nyamatali	979 14 0	104 3 6	244 13 6	34 13 6	279 13 0
72—101	Mauza ditto, thana ditto, mahal ditto, taluk Bhawadali.	Nur Muhammad	901 2 0	110 6 0	177 10 0	36 13 6	214 7 6
99—121	Mauza Zharulia, thana Ramoo, mahal Noabad, taluk Khayeruliah.	Kamala Kanta Sen	676 6 0	69 13 0	253 10 3	23 4 0	276 14 3
119—153	Mauza Nunachhari, thana Ramoo mahal Noabad, taluk Gouri Sankar and Bodya Nath Kanungoe.	Golambari, Golamkibria, Golamakbar Chowdhuri, Bakia Bibi, Falchum Bibi, Chhamabai Bibi and Nargis Bibi.	893 1 9	73 11 6	222 5 9	24 0 3	246 13 0
126—165	Mauza Uttarmithachhari, thana Ramoo, mahal Noabad, taluk Rustumali.	Mahammad Ismail Chowdhuri and Badaruluza.	1,971 4 0	122 1 0	401 12 0	40 11 0	442 7 0
152—250	Mauza Sharunkhali, thana Ramoo, mahal Noabad, taluk Mahammad Raja.	Srimati Gol Bahar, Ehsadad, Nechhamallah, Srimati Arap Jamal, herself and for her minor sons, Ahasanajjama, Kamaljama and Manirajama, and Srimati Golafroz, herself and for her minor sons, Fatehahamad, Badar Alam, Faridal Alam, and daughters Jarina Khatun Farida Khatun, Nazaya Khatun, Hasnara Khatun and Asia Khatun.	1,166 4 0	141 13 6	343 13 0	47 5 0	393 3 0
204—264	Mauza Joarianala, thana Ramoo, mahal Noabad, taluq Golamali.	Akbar Kamal Chowdhuri	673 0 0	86 7 0	504 12 0	37 10 0 Tahabana	542 6 0 0 13 0
							543 3 0
246 239/249	Mauza Manikpur, thana Chakaria, mahal Noabad, taluq Jhalafuroo.	Srimati Dilendra Kumari	809 0 0	110 6 6	339 4 0	36 13 0	376 1 0
270 274/345	Mauza Phoola Manikchar, thana Chakaria, mahal Noabad, taluq Bibi Isprak.	Asmat Ali and Jaha Baksha	1,579 8 0	173 0 0	502 6 0	57 15 0	560 5 0
284 271/294	Mauza Khilasdak, thana Chakaria, mahal Noabad, taluq Bibi Isprak.	Meahjan Sikder	535 5 0	97 15 9	196 6 0	33 10 0	231 0 6
289 285/289	Mauza Paharchanda, thana Chakaria, mahal Noabad, taluq Bibi Isprak.	Beni Madhab Sen	1,960 8 0	149 12 6	743 2 0	49 14 10	793 0 10
295 78/518/484/580	Mauza Tolong, thana Chakaria, mahal Noabad, taluq Hari Das Bahaddar, Har Chandra and Nabin Chandra.	Nezamat Ali Chowdhuri	1,483 14 0	191 6 6	539 9 0	63 13 0	603 6 0
304 299/307	Mauza Rajakhali, thana Chakaria, mahal Noabad, taluq Bibi Isprak.	Nezamat Ali	1,905 10 0	215 13 6	672 14 9	140 5 5	793 4 0
306 270/303	Mauza Kolarbil, thana Chakaria, mahal Noabad, taluq Raja Khan.	Akbar Ali Khan	1,044 10 0	109 9 6	301 11 9	36 9 6	428 5 3
320 46/705/684/5449	Mauza Betiali, thana Chakaria, mahal Noabad, taluq Hari Das Bahaddar.	Nezamat Ali	803 4 0	44 4 0	158 11 0	14 12 9	203 7 9

The 13th June 1905.

J. J. BARNIVILLE, Collector

Advertisement of Sale.

NOTICE is hereby given that the undermentioned plots of land, no longer required by Government, situated along the South Behar Section Railway, in the district of Monghyr, will be put up to sale at 10 o'clock on the 8th day of July 1905, corresponding with the 21st Asadh 1312 Fusli, at Barhiá village Indupur.

The purchasers of the several plots of land will be subject to the following conditions:—

1st.—The purchasers will have no power to make any excavations on the land nearer than 15 feet from the railway fencing, or plough the land closer than 3 feet from its foundation.

2nd.—If the amount of purchase-money does not exceed Rs. 100, the whole amount must be paid down at once.

3rd.—If the amount of purchase-money exceed Rs. 100, one-fourth of the amount must be immediately deposited. If the balance be not paid by noon of the fifteenth day after the sale, reckoning the day of sale as one, or if that day be a close holiday, then by noon of the first succeeding office day, the sale shall be cancelled, the sum deposited being forfeited to Government, and the lot again put up for sale at the risk of the defaulting purchaser, after issue of advertisement as in the case of original sale.

4th.—The plots of land will be sold revenue-free to the highest bidders.

5th.—The purchasers shall be put in possession on receipt by the Collector of the orders of the Board confirming the sale.

Consecutive lot number.	Name of district.	Pargana and mauza.	Number of mile on which land is situate.	Situated on which side of the railway.	Approximate area of lot in bighas and in acres. B. K. C.	Approximate area of lot in bighas and in acres. A. R. P.	Land excluded from sale from each lot. Reasons for exclusion.	Land excluded from sale from each lot. A. R. P.	Commencement and termination of lot.	Boundary of lot.
1	2	3	4	5	6		7		8	9
1	Monghyr	Indupur, pargana Salemabad.	.....	South of the railway line running from Howrah to Dehli.	3 17 15½	3 1 16·528	.....	.....	From 1 to 4.	*North*—Orchards belonging to Kali Singh, Chulha Dusadh, Muso Singh in Barhi and jote of Jagdeo Singh in relinquished B class land. *South*—Waste land and relinquished B class lands. *East*—Waste land. *West*—Railway fencing.
2	Ditto ...	Ditto ..	.....?	Ditto ...	3 1 4½					
3	Ditto ...	Ditto ...	.....	Ditto ...	0 15· 0					
4	Ditto ...	Ditto ...	.....	Ditto ...	2 3 16½					
					10 2 16·½					

Monghyr, the 9th May 1905.

U. GUHA, *for* Collector.

Advertisement of Sale.

NOTICE is hereby given that the undermentioned plots of land, no longer required by Government, situated along the Nirmali Station of the Tirhut State Railway, in the district of Bhagalpur, will be put up to sale at 11 o'clock on the 30th June 1905, corresponding to 13th of Assar Fasli 1312 at Supaul Katchery, district Bhagalpur.

The purchasers of the several plots of land will be subject to the following conditions:—

1st.—The purchasers will have no power to make any excavations on the land nearer than 15 feet from the railway boundary, or to plough the land closer than 3 feet from its foundation.

2nd.—If the amount of purchase-money does not exceed Rs. 100, the whole amount must be paid down at once.

3rd.—If the amount of purchase-money exceed Rs. 100, one-fourth of the amount must be immediately deposited. If the balance be not paid by the noon of the fifteenth day after the sale, reckoning the day of sale as one, or if that day be a close holiday, then by noon of the first succeeding office day, the sale shall be cancelled, the sum deposited being forfeited to Government, and the lot again put up for sale at the risk of the defaulting purchaser, after issue of advertisement, as in the case of original sale.

4th.—The plots of land will be sold revenue-free to the highest bidder.

5th.—The purchasers shall be put in possession on receipt by the Collector of the orders of the Board confirming the sale.

Consecutive lot No.	Name of district.	Pargana and mauza.	Number of mile on which land is situate.	Situated on which side of the railway.	Approximate area of lot in bighas and in acres. B. K. C.	Approximate area of lot in bighas and in acres. A. R. P.	Land excluded from sale from each lot. Reasons for exclusion.	Land excluded from sale from each lot. A. R. P.	Commencement and termination of lot.	Boundary of lot.
43, 46, 47, 48, 49, 50, 51, 52, 53, 54, 55, 56, 57, 58, 59, 60, 61, 62 to 67, 69 to 114, 116 to 121, 125 to 129, 132, 133, 138, 140 and 141.	Bhagalpur	Mauza Nirmali, pargana Nareilgar.	67	North ...	44 7 8 (Standard).	14·07 0 0	.....	.....	.....	*North*—Mauza Nirmali. *South*—Land in possession of the railway. *East*—Road to Nirmali. *West*—Mauza Nirmali.

Bhagalpur, the 15th May 1905.

H. COUPLAND, Collector of Bhagalpur.

Advertisement of Sale.

NOTICE is hereby given that the undermentioned plots of land, no longer required by Government, situated along the Hajipur-Katihar Extension Railway, in the district of Monghyr, will be put up to sale at 10 o'clock on 8th day of July 1905, corresponding to the 21st Asarh 1312 Fasli, at Mohanpur, pargana Naipur.

The purchasers of the several plots of land will be subject to the following conditions:—

1st.—The purchasers will have no power to make any excavations on the land nearer than fifteen feet from the railway fencing, or plough the land closer than three feet from its foundation.

2nd.—If the amount of purchase-money does not exceed Rs. 100, the whole amount must be paid down at once.

3rd.—If the amount of purchase-money exceeds Rs. 100, one-fourth of the amount must be immediately deposited. If the balance be not paid by noon of the fifteenth day after the sale, reckoning the day of sale as one, or if that day be a close holiday, then by noon of the first succeeding office day, the sale shall be cancelled, the sum deposited being forfeited to Government, and the lot again put up for sale at the risk of the defaulting purchaser, after issue of advertisement, as in the case of original sale.

4th.—The plots of land will be sold revenue-free to the highest bidders.

5th.—The purchasers shall be put in possession on receipt by the Collector of the orders of the Board confirming the sale.

Consecutive lot No.	Name of district.	Pargana and mauza.	Number of mile on which land is situate.	Situated on which side of the railway.	Approximate area of lot in bighas and in acres.		Land excluded from sale from each lot.		Commencement and termination of lot.	Boundary of lot.
					B. K. C.	A. R. P.	Reasons for exclusion.	A. R. P.		
1	2	3	4	5	6		7		8	9
1	Monghyr	Mohanpur, pargana Naipur.	2 of the Hajipur-Katihar extension.	North ...	0 5 11	.....	.....	.....	From 1 to 3 ...	*North.*—Girja Chaudhry's land. *South.*—Waste land *East.*—Railway fencing. *West.*—Alkhu Chaudhry's land.
2	Ditto ...	Ditto ...	Ditto ...	Do. ...	0 5 6	.....	.....	.....	.....	*North.*—Girja Chaudhry's land. *South.*—Railway fencing. *East.*—Railway fencing. *West.*—Girja Chaudhry's land.
3	Ditto ...	Ditto ...	Ditto ...	Do. ...	0 0 12	.....	.....	.....	.....	*North.*—Girja Chaudhury's land. *South.*—Railway fencing. *East.*—Railway fencing *West.*—Girja Chaudhury's land.

Monghyr, the 9th May 1905.

UMA PRASANNA GUHA, *for* Collector.

Notice of Sale for Arrears of Revenue.

NOTICE is hereby given, under section 6, Act XI of 1859, Act VII (B.C.) of 1868 and Act II (B.C.) of 1871, that the undermentioned tenures in the Satkania khas mahal, in the district of Chittagong, will be put up to public and unreserved sale at the Collector's office of that district on the 13th day of July 1905 for arrears of rent and cesses remaining unpaid on the 25th May 1905.—

No. of tenure.	Name of tenure with its situation.	Name of proprietor.	Annual jama		Amount of arrears for which the tenure is to be sold.		
			Rent.	Cesses.	Rent.	Cesses.	Total.
			Rs. A. P.	Rs. A. P.	Rs. A. P.	Rs. A. P.	Rs. A. P.
34/1824	Thana Satkania, at present Banskhali, mauza Nakora, mahal Noabad, hal taluk Rajkumar Roy.	Mahesh Chandra Bhattacharji ...	1,139 0 0	127 0 6	247 2 0	27 10 0	274 12 0
17/420	Thana Ditto mauza Chambal, mahal Noabad, taluk Tajannissah.	Srimati Jabeda Khatoon, herself and on behalf of minor sons, Abdul Karim, Abdool Rahim, Abdul Salim, Abdul Khalem and daughter, Srimati Jannoot Khatoon	1,954 4 0	161 9 6	732 14 0	60 9 6	793 7 6
5602/4900	Thana Satkania, mauza Satghar, mahal Noabad, taluk Fazar Ali Khan.	Salamat Ali Khan, Srimati Ashraf Bibi.	530 2 0	48 4 0	198 12 9	18 1 3	216 14 0

Chittagong, the 9th June 1905.

F. P. DIXON, Collector.

Advertisement of Sale.

NOTICE is hereby given that the undermentioned plots of land, no longer required by Government, situated along the Hajipur Branch Railway, in the district of Muzaffarpur, will be put up to sale at 1 o'clock on Friday, the 30th June 1905, corresponding with the 13th Jaith of 1312 Fusli, at Muzaffarpur.

The purchasers of the several plots of land will be subject to the following conditions:—

1st.—The purchasers will have no power to make any excavations on the land nearer than 15 feet from the railway boundary, or to plough the land nearer than 3 feet from the same.

2nd.—If the amount of purchase-money does not exceed Rs. 100, the whole amount must be paid down at once

3rd.—If the amount of purchase-money exceed Rs. 100, one-fourth of the amount must be immediately deposited. If the balance be not paid by noon of the fifteenth day after the sale, reckoning the day of sale as one, or if that day be a close holiday, then by noon of the first succeeding office day, the sale shall be cancelled, the sum deposited being forfeited to Government, and the lot again put up for sale at the risk of the defaulting purchaser, after issue of advertisement, as in the case of original sale.

4th.—The plots of land will be sold revenue-free to the highest bidders.

5th.—The purchasers shall be put in possession on receipt by the Collector of the orders of the Board confirming the sale.

Consecutive lot No.	Name of district.	Pargana and mauza.	Number of mile on which land is situate.	Situated on which side of the Railway.	Approximate area of lot in bighas and in acres. B. K. C.	A. R. P.	Land excluded from sale from each lot. Reason for exclusion.	A. R. P.	Commencement and termination of lot.	Boundary of lot.
1	Muzaffarpur.	Chupralodi *alias* Maripore and Bhagwanpore, pargana Besara.	Mile 1 of Hajipur line.	West of the Railway.	0 13 5	0 0 32	.....	.....	.....	*North*—Orchard of Tabarak Hussain. *South*—Public road. *East*—Railway fencing. *West*—Orchard of Kunja Sahu.
2	Ditto ...	Chupralodi *alias* Maripore.	Ditto ...	East of the Railway.	0 4 4	0 0 11·3	.....	.....	.....	*North*—Garden of Mr. Franjy. *South*—Public road. *East*—Garden of Mr. Franjy. *West*—Railway fencing.
3	Ditto ...	Ditto ...	Miles 1 and 2 of Hajipur line.	Ditto ...	0 4 0	0 0 11	.....	.....	.....	*North*—Public road. *South*—Orchard of Safdar Hussain. *East*—Orchard of Abdul Jabar. *West*—Railway fencing.
4	Ditto ...	Ditto ...	Ditto ...	On both sides of the Railway.	2 18 8	0 2 30	This being a part of the District Board road.	0 2 20	.....	

The 17th April 1905.

KALI MOHAN SEN, for Collector.

Notice of Sale for Arrears of Revenue.

NOTICE is hereby given, under section 6, Act XI of 1859, read with Act VII (B.C.) of 1868 and Act II (B.C.) of 1871, that the undermentioned noabad taluks within the Sadar khas mahal, in the district of Chittagong, will be put up to public and unreserved sale at the Collector's office of that district on the 14th day of July 1905 for arrears of rent and cesses remaining unpaid on the 25th day of May 1905:—

Mahal Noabad.

Serial No.	No. of taluk.	Name of taluk with its situation.	Name of proprietor.	Sadar Jama. Rent.	Sadar Jama. Cesses.	Arrear. Rent.	Arrear. Cesses.
				Rs. A. P.	Rs. A. P.	Rs. A. P.	Rs. A. P.
1	865 / 20134	Mauza Bakalia, thana Town, taluk Ahamad Ali.	Mosharaf Ali and others ...	1,205 4 0	236 5 6	474 12 0	77 11 6
2	4757 / 25878	Mauza Juskhola, thana Patickchari, taluk Earali Khan.	Obedar Rahaman Khan	3,556 4 0	166 12 0	1,421 2 9	120 4 9
3	4758 / 25879	Mauza Juskhola, thana Patickchari, taluk Obedulla.	Hashmat Ali Khan Chowdhury and others.	1,149 0 0	58 1 0	450 14 0	18 3 6
4	4871 / 26021	Mauza Bhujpur, thana Patickchari, taluk Earali Khan.	Nipruchaiman Raja	703 0	36 13 0	263 [illegible] 0	13 13 6
5	1 / 23939	Mauza Hapania, thana Patickchari, taluk Faradjafar.	Ditto	894 10	67 9 6	181 0 0	25 9 0

Chittagong, the 10th June 1905.

J. J. BARNIVILLE, *for* Collector.

Notification A.

NOTICE is hereby given under sections 6 and 13, Act XI of 1859, that the undermentioned estates and shares of estates in the district of Cuttack will be put up for sale at the office of the Collector of that district on the 31st July 1905 at 12 o'clock noon for arrears of revenue and other demands, which by law are realizable as arrears of land revenue.

When in columns 5, 7 and 9 of the appended statement it is stated that only a share is to be sold, it is to be understood that a separate account is kept for that share.

Tauzi No.	Name of mahal and pargana.	Sadar jama of the whole estate.	Whether the whole estate is to be sold.	If only a share is to be sold, specification of such share or shares.	Names of proprietors of property to be sold.	If only a share is to be sold, the sadar jama of such share.	If the whole estate is to be sold, the arrears due from it.	If only a share is to be sold, the arrears due from it.
1	2	3	4	5	6	7	8	9
3370	Ta. Kasaba, pargana Ahiyas.	Rs. A. P.	.....	14a. 3p 3kt. in each mauza of the estate, excluding 1a. 8p. 17kt.	Shaikh Mian Jan Mian and others.	Rs. A. P. 2,373 13 0	Rs. A. P.	Rs. A. P. 75 13 9
813/1	Tape Sahaushanpur, pargana Alti.	.. ..	.....	3a. 2p. 9kt. in each mauza of the estate, excluding 12a. 9p. 12kt.	Babu Balaram Bhramerber Rai and others.	2,315 0 0	.....	1,153 2 9
813/2	Ditto ditto ..	... ..	... ..	Ditto ditto ..	Braja Sunder Mearda-raj.	2,315 0 0	.....	1,153 2 9
813/3	Ditto ditto ...	..	.....	Ditto ditto ...	Gokul Chandra Srichandan.	2,315 0 0	... ..	1,153 1 9
816	Kt. ma. Souria, pargana Alti.	1,020 0 0	Whole ..	.....	Babu Lakshmi Narayan Jagadev.	.	510 0 0	
1062	Ta. Krustnapur, pargana Asureswar.	8,583 0 0	Do. ...	.....	Srimati Annapurna Devi	.....	4,292 0 0	..
309	Kt. ma. Kanapur, etc., pargana Barah.	... .	.....	15a. 7p. 17kt. 1b. 15g. comprised in all the entire mauzas in the estate, except entire mauza Karimabad constituting a share of 4p. 2kt. 14b. 3g. out of the whole estate to be excluded from sale.	Parameswar Biswal and others.	669 2 0	.....	15 10 4
1328	Ta. Uper Barnan, pargana Barnan.	.....	.....	13a. 1p. 9kt. 2b 13g. 1c. 1bed. comprising all other villages except 6p. 6g. 1kt. 3b. 1g. in mauzas Wasahi and Kamalpur, which constitute a share of 2a. 10p. 10kt. 13b. 0g. 2c. 3bed. out of the entire estate to be excluded from sale.	Balmukund Dobai and others.	718 15 0	.....	166 12 2
2401	Kt. L. B. Ta. Janardanpur, pargana Barpalia.	1,149 9 0	Whole ...	.....	Lakshmi Narayan Jagadev.	.....	574 1 0	... ..
2772	Ta. Araicole, pargana Benahar.	.....	.....	15a. 10p. 4kt. 11b. 12g. comprising all other mauzas in the estate except mauza Bakhrabad (whole) and half of mauza Anantpur which constitute a share of 1p. 15kt. 4b. 5g. out of the whole estate.	Prana Krishna Das and others.	1,071 12 1	.....	21 11 6
1474	Ta. Radha Prashad, pargana Chowdkulat.	2,747 10 4	Whole ..	... .	Chowdhuri Kurtibas Das and others.	.....	1,373 10 4	.....
1476	Ta. Govind Prashad, pargana Chowdkulat.	. ..	.....	6a. 5p. 16kt. in each mauza of the estate, excluding 9a. 7p. 4kt.	Balaram Bhramerber Rai and others.	3,006 15 0	.....	1,503 9 0
1476/1	Ditto ditto ...	...	...	3a. 2p. 8kt. in each of the mauzas of the estate, excluding 12a. 9p. 12kt.	Shyama Sunder Narindra.	1,503 7 0	... ..	751 13 0
1476/2	Ditto ditto ...		.	3a. 2p. 8kt. in each of the mauzas in the estate excluding 12a. 9p. 12kt.	Braja Sunder Mardaraj	1,503 6 0	.. ..	751 13 0
1476/3	Ditto ditto .	.		3a. 2p. 8kt. in each of the mauzas in the estate excluding 12a. 9p. 12kt.	Gokul Chandra Srichandan.	1,503 6 0	..	751 13 0
3067	Kt. Ta. Agrahat, killah Daljora.	847 0 0	...	...	Shaikh Abdul Gani and others.	.	128 3 1	.
1971	Ta. Padmanabhpur, pargana Dharakhpur	...	.	8a. 0p. 9kt. 14b. 8g. 3c. in each of the mauzas in the estate excluding 7a. 2p. 10kt. 1b. 11g. 1c.	Babu Balaram Bhramerber Rai and others.	2,704 5 0	... .	910 9 0
3502	Ma. Jari, pargana Dolegram.			13a. 2p. 4kt. 11b. 4g. comprising all other mauzas and shares of mauzas except 1a. 8p. 15kt. 8b. 3g. 3c. in mauzas Champasal, Fakirpur, Hansanabad, Kural Paharajpur, Nemra, and Tina, and 1a. 10p. 19kt. 4b. 12g. 1c. in mauza Jari, and 1a. 11p. 19kt. 15b. 15g. 3c. in mauza Chhotagari, which constitute a share of 1a. 9p. 15kt. 4b. 16g.	Nemai Charan Samal and others.	2,786 12 0		13 14 5
2175	Ta. Madhyamsan, pargana Hariharpur.			10a. 1p. 7kt. 11b. 11g. 2bed., comprising all other mauzas and shares of mauzas except the entire mauza Radhang and ½ of mauzas Satpura, Dhanipur, Bhabanipur, Balia, Tachhna Bramhapur, and Garual, ½ of mauzas Pandia and Nuapari, ½ of mauzas Alando, Hajipur, Kamamsan, Madhyamsan, and Salajang, and ½ of mauza Kheras which constitute a share of 3a. 10p. 12kt. 4b. 8g. 3c. 2bed.	Kanhu Charan Bramha and others.	1,275 10 8	.	1,062 5 5
349	Kt. ma. Madhutan, pargana Hatimanda.	651 0 0	Whole ...	.....	Dibakar Samal	.....	70 9 3	.

Tauzi No.	Name of mahal and pargana.	Sadar jama of whole estate.	Whether the whole estate is to be sold.	If only a share is to be sold, specification of such share or shares.	Names of proprietors of property to be sold.	If only a share is to be sold, the sadar jama of such share.	If the whole estate is to be sold, the arrears due from it.	If only a share is to be sold, the arrears due from it.
1	2	3	4	5	6	7	8	9
		Rs. A. P.				Rs. A. P.	Rs. A. P.	Rs. A. P.
3198	Kt. ta. Birtole, pargana Jhankar.	..	.....	12a. in each mauza of the estate, excluding 4a.	Deokali Kuanr and others.	2,120 4 0	.....	177 5 0
1503	Kt. tauzi Ampore, pargana Jodh.	753 0 0	Whole ...	.....	Sree Govindjee Thakur Sebait, Balaram Bhramerber Rai and others.	.....	133 4 6	.....
1512	Ta. Govind Prashad, pargana Jodh.		.....	6a. 4p. 16kt. in each mauza of the estate, excluding 9a. 7p. 4kt.	Balaram Bhramerber Rai and others.	2,657 3 9	.....	1,399 1 3
1512/3	Ditto ditto ...	.. ..	... .	3a. 2p. 8kt. in each mauza of the estate, excluding 12a. 2p. 12kt.	Gokul Chandra Srichandan.	1,228 10 6	.....	649 8 3
1396	Ta. Sadakpur, pargana Kalamatia.	865 0 0	Whole ...	.....	Sarat Kumar Ghose and others.	.....	25 8 2	.....
1463	Ta. Bari, pargana Kalamatia.	9,538 0 0	Do. ...	.....	Raja Baikuntha Nath De Bahadur, uncle and guardian of Manmath De, minor.	.....	966 0 0	.....
1382	Kt. Ta. Puran, pargana Karimul.	750 14 7	Do. ...	.....	Chowdhuri Krutibas Das and others.	.....	375 8 11	.....
1362	Ma. Pubkachh, pargana Karimul.	.....	.....	11a. 5p. 2kt. in each of the mauzas of the estate, excluding 4a 6p. 19kt.	Chowdhuri Bijeram Das and others.	974 14 6	.....	485 6 0
2722	Kt. Ta. Tihura ma. Nangaun, &c., pargana Katey.	659 0 0	Whole ...	.....	Lalmohan Das and others.		329 0 0	.....
2731	Kt. Ta. Jamugaun, pargana Katey.	502 0 0	Do. ...		Radha Krishna Das and others.	.....	31 2 7	.....
2741	Ta. Bhatpada, pargana Katey.	.....	.....	15a. 7p. 15kt. 16b. in each mauza of the estate, excluding 4p. 4kt. 2b.	Govind Chandra Das and others.	568 4 0	.....	2 5 5
88	Kt. Ta. Naharapur, pargana Jajpur.	.....	... .	10a. 3p. 18kt. 15b. 11g. 1c. comprising 8a. in mauzas Sarisuda and Rania, entire villages Utaipur, Kothsahi, Nayagobindpur, Nakhuapal, Barhaipal, Kapasi, Kapileswar, Kapileswar Samil, Ranua and Sohara, 10a. 5p. in mauza Kakharudihi, 9a. in mauzas Andatola and Digraj Samil Khalgaria, 8p. in mauza Ranbajpur, 6a. 8p. in mauza Solaparhi, 6a. 4p. in mauza Bidyadherpur, 6a. in mauza Solampur, 6a. 2g. 8kt. in mauza Bidyadherpur, 7a. in mauza Kapasipatna, 1a. in mauza Baidyarajpur Samil Bidyadherpur, 13a. 3p. 19kt. 8b. in mauza Balipasi, 6a. 4p. 16kt. in mauza Sreedharpur, 3a. 2p. 8kt. in mauza Tipara, 6a. 4p. 16kt. in mauza Itra, 4a. 2p. 6b. 8g. in mauza Kodandpur, 11a. 6p. 15kt. in mauza Ranigora, 11a. 10p. 5kt. 8b. in mauza Ranigur, 9a. 7p. 13kt. in mauzas Indas Nos. I and II, Debidwar, Khalgaria, excluding all other mauzas and shares of mauzas which constitute a share of 5a. 9p. 1kt. 2g. 8c.	Kunja Behari Routra ...	3,858 8/ 0	.....	1,518 7 6
3826	Ma. Narigaun, pargana Katia.	... ..	. .	9a. 6p. 14b. 1g. 3c. 1bed. in each of the mauzas of the estate, excluding 6a. 8p. 19kt. 1b. 18g. 1c. 3bed.	Sidheswar Rout and others.	774 0 0	... ..	338 12 9
3804	Ma. Knans, pargana Katia.	... ..	.. ..	15a. 11p. 2kt. 9b. 16g. 2c. 1bed. comprising all other mauzas except 2p. 12kt. in mauza Tarangsagarpur which constitute a share of 17kt. 6b. 1g. 1c. 3bed.	Hadibandhu Mandhata Mohapatra and others.	363 3 0	.....	11 9 9
736	Ta. Jhadeswarpur, pargana Kusumandah.	.....	.....	7a. 10p. 16kt. in each of the mauzas in the estate, excluding 8a. 1p. 4kt.	Chowdhuri Jagannath Santra Mohapatra and others.	582 2 0	.....	25 2 6
1768	Kt. ta. Nalatigiri, pargana Mathatnagar.	.....	.....	14a. 11p. 6kt. 3b. 5g. comprising all other mauzas in the estate except Olkana which constitute a share of 1a 13kt. 12b. 15g. of the whole estate.	Gokhai Padhan ...	924 14 0	.....	7 10 0
1057	Ta. Bodhraun, pargana Neulbis.	1,061 0 0	Whole .	.....	Sreemati Saraswati Jema Del Maulma.	.....	515 0 0	.....
1118	Ta. Rajendrapur, pargana Olas.	.....	... .	6a. 3p. 12kt. 8b. in each of the mauzas of the estate, excluding 9a. 8p. 7kt. 8b.	Gourang Charan Sahu and others.	1,418 4 0	.....	6 7 0
1664	Ta. Dhaneswar, pargana Sargara.	.....	. .	1a. 2kt. 6b. 18g. 1c. 3bed ...	Shaikh Sardari Hazari and others.	648 10 0	.....	61 14 3
3134	Kt. ta. Juldo, pargana Sargara.	605 0 0	Whole ...	.....	Babu Madhu Sudan Panda and others.	.....	3 10 3	.....
697	A. D. ma. Madhyakachh, etc., pargana Sungrah.	.....	.....	14a 1kt. 14b. in each of the mauzas of the estate, excluding 1a. 11p. 18kt. 2b.	Chowdhuri Krutibas Das and others.	1,321 2 0	.....	661 0 0
3477	Ta. Bodhai, pargana Tiran.	658 0 0	Whole ...	.....	Bamder Chowdhury and others.	.....	27 7 8	.....
4 24	Ta. Mansada. pargana Tisania.	1,084 0 0	Do. ...	.....	Lal Behari Das and others.	.....	6 12 1	.....
149	Ma. Sanjaria, pargana Tikan.	762 0 0	Do. ...	.....	Lakshmi Narayan Jagadev.	.....	381 0 0	.....
				Permanently-Settled Estate				
13	Killah Bishunpur ...	.....	.....	5a. in each of the mauzas of the estate, excluding 11a.	Narahari Das and others.	579 15 4	.....	5 7 4

Cuttack Collectorate, the 23rd June 1905.

W. F. C. MONTRIOU, Deputy Collector.

Notification of Sale.

NOTICE is hereby given, under sections 6 and 13, Act XI of 1859 [read with Act VII (B.C.) of 1868], that the undermentioned tenures or shares of tenures in estate Kothadesh, in the district of Puri, will be put up for sale at the office of the Collector of that district on the 4th August 1905 at 12 A.M. for arrears of revenue and other demands which by above laws are realizable as arrears of land revenue.

When in columns 5, 7 and 9 of the appended statement it is stated that only a share is to be sold, it is to be understood that a separate account is kept for that share, and all other shares not specifically mentioned in column 5 are excluded from the sale.

1	2	3		4	5	6	7		8		9		10
Number of tenure.	Name of tenure, mahal and pargana.	Sadar jama of the whole tenure.		Whether the whole tenure is to be sold.	If only a share is to be sold, specification of such share or shares. All other shares besides that specified are excluded from sale.	Names of proprietors of property to be sold.	If only a share is to be sold, the sadar jama of such share.		If the whole tenure is to be sold, the arrears due from it.		If only a share is to be sold, the arrears due from it.		Remarks.
		Rent.	Cess.				Rent.	Cess.	Rent.	Cess.	Rent.	Cess.	
		Rs.	Rs. A. P.				Rs. A. P.	Rs. A. P.	Rs. A. P.	Rs. A. P.	Rs. A. P.	Rs. A. P.	
4 / 4	Ma. Abhaymukhi Makadami, pargana Kothadesh.	487	28 14 2	Whole ...	.....	Sarbeswar Satpastti and others.	.....	.....	14 15 10	.....	.....	.....	For kist April 190
66 / 66	Ma. Bhagabatipur Makadami, pargana Kothadesh.	907	48 3 6	Do. ...	.....	Mahant Raghunandan Ramanuj Das.	.....	.....	44 0 9	2 0 4	.....	.....	
90 / 90 / 91	Ma. Biswanathpur Makadami, pargana Kothadesh.	1,200	69 8 0		Kismat 6p. 7g. 1k. 2kr.	Gadadhar Pani and others.	517 3 8	27 11 0	.....		183 4 2	10 5 10	
141 / 144	Ma. Garedipanchan Makadami, pargana Kothadesh.	880	53 14 0	Whole	.....	Chaudhury Kritibas Das and others.	.....	.....	127 8 0	6 0 4	.....	.....	
158 / 161	Ma. Hansapara Makadami, pargana Kothadesh.	1,196	67 1 6	Do. ...	.....	Durga Prasad Bhagat and others.	.....	.....	504 0 0	28 8 8	.....	.....	
184 / 189	Ma. Jhiutisasan Makadami, pargana Kothadesh.	1,609	81 13 6	Do.	.....	Banambar Mahanti and others.	.....	.....	805 0 0	40 14 9	.....	.....	
245 / 245 / 253	Ma. Nariso Makadami, pargana Antradh.	1,118	66 11 0	.....	Kismat 8p. 15g. 1k. 29d.	Baikuntha Sarangi and others.	613 1 0	36 9 2	.....	.....	113 1 2	3 10 0	
268 / 268 / 274	Ma. Pampalo Makadami, pargana Kothadesh.	1,036	54 11 4	.....	Kan at 12p. 2k. 1kr. 12b.	Chaudhury Chandra Sikhar Das and others.	779 1 5	41 2 6	.....	.....	387 2 6	18 8 3	
310 / 319	Ma. Sarato Sasan Makadami, pargana Kothadesh.	616	37 9 3	Whole ...	.....	Ditto ...	.....	.....	223 9 6	13 3 2	.....	.....	
315 / 325	Ma. Sara Kana Makadami, pargana Kothadesh.	1,327	69 6 6	Do. ...	..	Parsuram Mahapatra and others.	.....	.....	318 8 0	16 13 5	.....	.....	
338 / 338 / 346	Ma. Tarabol Sasan Makadami, pargana Kothadesh.	746	40 0 6	.....	Kismat 14p. 2g. 2k.	Raghunandan Ramanuj Das and others.	658 9 3	35 5 6	.....	.....	34 13 4	1 13 7	
346 / 346 / 365	Ma. Turantira Makadami, pargana Kothadesh.	628	34 6 6	.....	Kismat 14p. 2g. 2k.	Purusottam Sahu and others.	552 10 3	30 6 0	.....	.....	72 5 1	.....	

Puri Collectorate, the 23rd June 1905.

J. R. BLACKWOOD, Collector.

MILITARY ACCOUNTS DEPARTMENT.

Statement of Unclaimed Sums deposited with the Bengal Military Orphan Society in trust for Soldiers' Children, exclusive of those of minors who have not attained the age of 21.

Date of Deposit.	Name and Rank of Father.	Corps.	Names of Children.	Amount. Rs.	a.	p.
Prior to 1842	Collins, ——, Sergeant ...	.....	Two children ...	157	14	1
,,	Lee, E., Corporal	.....	Two children ...	111	9	6
,,	Smith, Henry, Sergeant ...	.....	Elizabeth	828	0	0
,,	Smith, D., Sergeant-Major ...	.....	Margaret	78	6	6
,,	Story, ——, Sergeant ...	.....	Thomas	117	5	4
,,	MacConnell, Sergeant ...	.....	John	77	15	3
,,	Rutherford, Sergeant ...	.....	Margaret	138	10	8
,,	Hewetson, William, Gunner ...	.....	John	47	5	7
,,	Taylor, John, Private ...	.....	John	214	11	11
,,	Conroy, Peter, Corporal ...	.....	Thomas	274	14	6
,,	McCullum, ——, Conductor ...	.....	John	354	6	10
,,	Gordon, James	59th Foot	James	589	2	2
,,	Casey, Jeremiah	87th Foot	Daniel	109	12	4
,,	Corbolly, Thomas, Private ...	59th Foot	Samuel	62	12	3
,,	Cassidy, ——, Corporal ..	.....	John	61	3	9
,,	Hyde, Henry, Conductor ...	.....	Thomas	187	1	10
,,	Hodgkinson, E., Troop Sergeant-Major.	11th Dragoons ...	William	64	8	0
,,	Anderson, William, Corporal ...	H. C. 1st Bn. Regt. ...	Mary Anne Margaret ...	124	11	6
,,	White, W., Private ...	3rd Buffs	George and Mary Anne	13	13	9
,,	Minogue, T., Private ..	3rd Buffs	Thomas	23	11	0
,,	Tailor, John, Bombardier ...	.....	Elizabeth	43	0	0
,,	Neal, James, Private ...	59th Foot	James	43	0	0
,,	Sherrock, J., Corporal ...	.....	Joseph	160	0	0
,,	Moore, Bombardier ...	.....	Dorothy	5	9	5
,,	Lawson, Henry, Laboratory Sergeant.	.....	George	11	8	2
,,	Creighton, James, Corporal ...	13th L. Infy. ...	Mary Ann	16	12	0
,,	McCoy, ——, Sub-Conductor ...	.....	John and George ...	958	3	2
,,	Long, R., Sergeant ...	Allahabad Magazine Establishment.	Ann and Robert D. ...	137	3	9
,,	Baker, H., Gunner ...	4th Co., 3rd Bn. Arty. ...	James	32	1	4
,,	Hills, ——, Gunner ...	1st Co., 3rd Bn. Arty. ...	Sophia	30	1	1
,,	Burns, James, Gunner ...	Artillery	Hannah	10	5	9
,,	McKenney, R., Bombardier ...	1st Co., 4th Bn. Arty. ...	Ann Eliza	134	6	5
,,	Smith, J., Gunner ...	1st Co., 2nd Bn. Arty. ...	Margaret	6	6	5
,,	Byrne, F., Hospital Sergeant ...	2nd Bn., Arty. ...	Charles	123	13	4
,,	Flynn, J., Gunner ...	3rd Troop, 1st Bde., H. Arty.	Elizabeth	6	1	4
,,	Fagan, J., Gunner ...	1st Co., 3rd Bn. Arty. ...	Mary and James ..	11	12	9
,,	Johnson, C., Gunner ...	1st Co., 5th Bn. Arty. ...	William	3	0	6
,,	Twoomey, M., Gunner ...	4th Co., 3rd Bn. Arty. ...	Michael, William, and Margaret.	21	2	11
,,	Ahern, William, Gunner ...	4th Co., 2nd Bn. Arty. ...	John	65	11	9
,,	McCormick, J., Gunner ...	4th Co., 2nd Bn. Arty. ...	Bernard	116	10	9
,,	Gavin, J., Gunner ...	2nd Co., 3rd Bn. Arty. ...	Thomas and James ...	189	3	6
,,	Bryan, D. Sergeant ...	.....	Mortimer	12	10	11
,,	Reid, ——, Sergeant ...	Sappers and Miners ...	Eleanor and Eunice ...	68	6	5
,,	South, John, Sergeant ...	.....	Elizabeth and Martha ...	310	0	0
,,	Cunningham, Mathew, Private	44th Foot	Michael	37	14	6
,,	Blyth, John, Conductor ...	.....	Children (names not recorded).	12	12	3
,,	Smith, T., Sergeant	.....	Esther and Amelia ...	23	15	0
,,	Pierce, Qr.-Mr. Sergeant ...	20th N. I.	Thomas	711	15	2
,,	Driver, J., Sergeant-Major ...	.....	Robert Charles and John.	141	7	1
,,	Davis, D., Farrier Sergeant ...	4th Troop, 1st Bde., H. Arty.	Thomas	23	15	2
,,	Canty, John, Bombardier ...	3rd Co., 4th Bn. Arty. ...	John (died 11th May 1842).	272	2	8
June 29, 1853	(Not recorded)	.....	Bryon, Margaret, and William.	53	8	3
,, 29, 1849	(Not recorded)	.....	Daly, Robert ...	23	9	1
Mar. 24, 1843	Nowlon, L., Farrier Sergeant ...	4th Troop, 2nd B. H. A.	Ellen	112	9	0
Apl. 3, 1843	Farrel, James, Gunner ...	2nd Co., 5th Bn. Arty. ...	Charlotte	4	2	8
,, 3, 1843	Roach, Edward, Private ...	1st En. Lt. Infy. ...	David and Austel ...	7	13	3
Mar. 9, 1843	Shieham, B., Gunner ...	3rd Co., 3rd Bn. Arty. ...	John and Patrick ...	2	1	8
June 21, 1844	Evans, George, Sergeant ...	1st Co., 2nd Bn. Arty. ...	Mary Ann and Catherine.	19	14	9
Sept. 19, 1844	Andrews, ——, Private ...	44th Foot	George	200	0	0
Oct. 30, 1887	Ward, J., Gunner ...	O. Batty., 3rd Bde., R. A.	Julia	277	11	11
Dec. 31, 1887	Bunn, T., Gunner	G. Batty, B. Bde., R. H. A.	William Thomas ...	63	9	8
			James John ...	63	9	8
Mar. 29, 1888	Oxford, W., Private ...	2nd Royal Lanc. Regt.	A. L. and A. ...	20	6	5
Nov. 16, 1844	Gale, ——, Private ...	10th Foot	John Thomas ...	28	12	0
,, 21, 1844	Sullivan, John, Bombardier ...	1st Co., 2nd Bn. Arty. ...	John	180	0	0
Jan. 6, 1845	Monaghan, Michael, Sergeant ..	1st Co., 3nd Bn. Arty. ...	James	156	12	5

Date of Deposit.	Name and Rank of Father.	Corps.	Names of Children.	Amount. Rs. A. P.
Jan. 15, 1845	Godfrey, ——, Sergeant-Major...	.....	Harriett M. and James...	31 14 1
Feb. 14, 1845	Fry, ——, Bugle-Major ...	6th Bn. of Arty. ...	James	12 6 9
„ 3, 1842	Wilson	.. ...	Sophia, Thomas, and Elizabeth.	204 7 8
„ .. 1842	McCarthy, Qr.-Mr. Sergeant ...	.....	John	61 2 3
„ 14, 1845	Hannoo, J., Drummer ...	68th Regt., N. Infy. ..	Mary	28 8 3
July 7, 1845	Hay, A., Sergeant-Major ...	.....	Thomas	101 5 4
„ 9, 1845	Meaney, John, Sergeant-Major	2nd Bde., H. Arty.	Henry and James ...	292 15 8
„ 9, 1845	Murphy, Thomas, Bombardier	2nd Troop, 3rd Bde., H. Arty.	Ellen	77 4 11
„ 9, 1845	Fate, William, Staff Sergeant ...	4th Co., 15th Bn. of Arty.	Catherine Ann... ...	167 15 5
„ 9, 1845	Paley, Owen, Gunner ...	3rd Co., 5th Bn. of Arty.	Owen	7 1 7
Sept. 1, 1845	Ryan, ——, Sergeant ...	.....	Julia B. and George J.	120 13 0
Aug. 8, 1846	McEnerney, Thomas, Sub-Conductor.	.....	Hannah	152 0 9
.....	Glasscan, John, Corporal ...	.....	Ellen Sarah ...	66 10 3
.....	Ridley, Henry, Gunner ...	.....	Henry	34 9 3
Oct. 16, 1846	Lewis, Thomas, Gunner ...	Arty.	Thomas	20 5 3
July 6, 1847	Dobbins, Francis, Gunner ...	.....	Martha	83 3 6
„ 19, 1847	Lunn, Adam, Farrier ...	.....	Adam T. and John ...	79 14 0
„ 19, 1847	Clarke, William, Bombardier ...	1st Troop, 3rd Bde., H. Arty.	Not recorded ...	104 10 8
„ 19, 1847	Prince, W., Sergeant ...	1st Troop, 1st Bde., H. Arty.	Ditto	125 15 10
Jan. 11, 1848	Byrnes, ——, Corporal ...	.....	Maria	59 0 0
July 6, 1848	Braithwaite, W., Staff Sergeant	.....	C. William and William H.	148 3 6
Oct. 16, 1848	Butcher, H., Sergeant-Major ...	Sirmoor Bn. ...	Johannah, Frederick and David Edwin ...	99 6 1
May 9, 1849	Sheehan, D., Private ...	2nd En. Regt. ...	James	36 5 6
June 2, 1849	Moore, Benjamin, Private ...	1st En. B. F. ...	Sarah C.	9 8 4
„ 2, 1849	Crowley, Charles, Private ...	1st En. B. F. ...	John	7 6 1
Oct. 12, 1849	Deare, W., Conductor ...	.....	Emeline	50 0 0
Nov. 21, 1849	Moget, ——, Sergeant-Major ...	.....	George	69 14 4
Feb. 18, 1850	Boote, Daniel, Gunner ...	1st Co., 4th Bn. of Arty.	James and another ...	26 3 5
June 29, 1850	Uniack, Patrick, Sergeant ...	1st Co., 3rd Bn. of Arty.	John and another ...	29 15 0
Aug. 19, 1850	Sheehan, P., Gunner ...	Arty.	Patrick	23 5 6
Oct. 29, 1850	Lees, James, Corporal ...	2nd En. Regt. ...	Elizabeth	25 14 6
Nov. 4, 1852	Hodgins, Adam, Gunner ...	2nd Co., 5th Bn. of Arty.	William	9 11 11
Feb. 1, 1853	Edwards, Michael, Sergeant ...	2nd Co., 5th Bn. of Arty.	Jane and Bridget ...	36 5 9
Apl. 21, 1853	Staples, Edward, Sergeant ...	Sappers and Miners ...	E. W. H.	97 2 6
Sept. 13, 1853	Brown, Michael, Sergeant ...	Arracan Bn. ...	John	49 10 3
Jan. 24, 1854	Galway, Robert, Bombardier ..	1st Co., 3rd Bn. of Arty	William	206 1 2
„ 18, 1855	Munrowd, George, Sub-Conductor.	Ordnance Dept. ...	Georgiana	61 10 3
Sept. 24, 1855	Franks, G., Bazar Sergeant ...	.....	Mary Harriet ...	283 1 11
Oct. 15, 1857	Earle, Edward, Sergeant ...	Calcutta Town Guard ...	William Edward ...	209 14 0
Dec. 4, 1860	MacDonnel, John, Private ...	97th Foot	Charles	25 15 6
June ... 1862	Keddie, J., Private ...	2nd En. B. F. ...	Jane and James ...	86 0 0
July 22, 1863	Lawton, William, Color-Sergeant	24th Foot	William and Joseph ...	152 14 2
Jan. 25, 1864	Jones, John, Gunner ...	G. Battery, 22nd Bde., Royal Arty.	Henrietta Dalzell ...	39 5 10
Mar. 10, 1864 / May 19, 1864	Anderson, Willism, Gunner ...	5th Bn., 25th Bde., Royal Arty.	Duncan	35 4 11
July 18, 1865	Rowland, J., Private ...	2nd Dragoon Guards ...	Sophia M. and Elizabeth Ann.	8 0 9
June 25, 1866	Mead, William, Bombardier .	4-25th Royal Arty. ...	Mary and Thomas ...	4 0 0
Oct. 9, 1871	York, R., Sergeant ...	Arty.	Henry J.	21 1 4
May 8, 1884	Claydon, Daniel, Color-Sergeant	2nd Lanc. Fus. ...	Thomas Patrick ...	60 0 0
July 6, 1887 / June 2, 1888 and Sept. 7, 1888	Simons, J., Lance-Corporal ...	2nd Bn., The Queen's Royal West Surrey Regt.	Annie Isabella and John Thomas.	353 14 0
Apl. 11, 1889	Hyland, M., Drummer ...	2nd Bn., The Queen's Royal West Surrey Regt.	Patrick, Emily, Matilda, and Rosanna.	558 9 8

Application for payment of the deposits should be made to the Pay Examiner, Bengal Command, Calcutta.

JOHN C. C. PERKINS, *Captain*,

Pay Examiner, Eastern Command, and ex-officio
Secretary, Military Orphan Schools.

PAY EXAMINER'S OFFICE, EASTERN COMMAND;
Calcutta, the 9th June 1905.

Statement of the Affairs of the Bank of Bengal for the week ending 20th June 1905.

LIABILITIES.

	Rs.	A.	P.
Capital paid up	2,00,00,000	0	0
Reserve Fund	1,32,00,000	0	0
Public Deposits at Head Office ... ... Rs. 92,10,867 15 10			
Ditto ditto at Branches ,, 1,12,47,118 2 2	2,04,57,986	2	0
Other Deposits at Head Office and Branches ...	10,67,92,660	5	3
Bank Post Bills, &c.	8,21,387	0	4
Sundries	33,36,520	13	7
Rupees ...	16,46,07,954	5	2

ASSETS.

	Rs.	A.	P.
Government securities	1,26,78,978	1	11
Other authorised investments	69,33,122	9	8
Loans on Government and other authorised securities	3,36,67,770	13	0
Accounts of credit on ditto ditto	2,04,03,027	3	1
Bills discounted and purchased	3,56,13,415	10	10
Balances with other Banks	10,84,799	14	7
Bullion	.....		
Dead Stock	18,60,960	14	5
Stamps	13,048	5	0
Sundries	12,50,679	6	6
	11,33,05,802	15	0
Cash & Currency Notes at Head Office* ... Rs. 2,71,24,103 8 4			
Cash & Currency Notes at Branches† ... ,, 2,41,78,047 13 10	5,13,02,151	6	2
Rupees ...	16,46,07,954	5	2

* Includes Govt. & ½ Govt., value Rs. 2,74,650 0 0
† Do. do. do. ,, 2,25,390 0 0
Rs. 5,00,040 0 0

By order of the Directors,

BANK OF BENGAL, Calcutta, 22nd June 1905.

E. DICKINSON, Chief Accountant.
Rate for Demand Loans, 4 per cent.
Percentage 39·04

W. D. CRUICKSHANK, Secretary and Treasurer.

(744—1)

SALE PROCLAMATION.

In the Court of Babu Nundo Lal Dey, Subordinate Judge, 1st Court, Bhagalpur.

TITLE EXECUTION CASE No. 539 OF 1904.

Ramni Mohun Singh and another, decree-holders, *versus* Nund Kishore Lal Tewari and others, judgment-debtors.

THE following properties shall be sold by the Nazir of the District Court on the 17th July 1905, at 12 noon, for the realisation of Rs. 41,265-14-5 :—

Sixteen annas of mahal Nisf Saidpur, *asli* and *dakhli*, pargana Bhagalpur, No. 72 tauzi, and sadar jama Rs. 395-14; estimated value Rs. 5,000.

Sixteen annas of mahal Makhsuspur Khurd, *asli* and *dakhli*, pargana Calgong, No. 273 tauzi, and sadar jama Rs. 1,497-13; estimated value Rs. 35,000.

NUNDO LAL DEY,
Subordinate Judge, 1st Court.

Bhagalpur, the 20th June 1905. (739—1)

In the Court of Rai Surjo Narain Dass, Bahadur, Subordinate Judge, Purnea.

TITLE EXECUTION CASE No. 3 OF 1905.

Babu Surendro Narain Singh, decree-holder, *versus* Babu Chuterput Singh and another, judgment debtors.

TO be sold in the above case by the Nazir of the District Judge's Court, Purnea, at 12 A.M., 3rd July 1905, for realisation of the judgment-debt, Rs. 58,589-6-1, the right, title and interest of judgment-debtors in the following property :—

5th lot.—List of property of the judgment-debtors possessing whole 8 annas share out of 16 annas, No. 1178 tauzi of the Purnea Collectorate, pargana Katihar, in the jurisdiction of thana and sub-registry Purnea, the sadar revenue of which is payable to the Collectorate amounting to Rs. 5,456-1-3, valued at about Rs. 10,000. Let it be known that the name of Bibi Fulkumari is entered in the said mahal.

SURJO NARAIN DASS, Subordinate Judge.

Purnea, the 19th June 1905. (740—1)

In the 2nd Court of Subordinate Judge of Saran.

EXECUTION CASE No. 139 OF 1905.

Basdeo Bajpai, decree-holder, *versus* Raja Mohan Bekram Shah, judgment-debtor.

TO be sold in the above case by the Nazir of the Judge's Court at 6 o'clock, on the 3rd July 1905, for realization of decree-money, Rs. 8,927-2-6, the following mortgaged properties belonging to the judgment-debtor :—

Sixteen annas of mauza Balea Bakharha, appertaining to mahal Zamera, tappa Chegwan, pargana Mojhwa, tauzi No. 235, Government revenue Rs. 1,666-13, thana Shikarpore, sub-registry Bettiah. The approximate value given by the decree-holder is Rs. 600.

Sixteen annas of mauza Charcharwa, appertaining to mahal Zamera, tappa Chegwan, pargana Mojhwa, tauzi No. 235, Government revenue Rs. 1,666-13, thana Shikarpore and sub-registry office Bettiah. The approximate value given by the decree-holder is Rs. 200.

Sixteen annas of mauza Fagoonhata, appertaining to mahal Zamera, tappa Chegwan, pargana Mojhwa, tauzi No. 235, Government revenue of mahal Rs. 1,666-13, thana Shikarpore, and sub-registry office Bettiah. The approximate value given by the decree-holder is Rs. 700.

Sixteen annas of mauza Sarahwa, appertaining to mahal Chatera, tappa Chegwan, pargana Mojhwa, tauzi No. 235, Government revenue of mahal Rs. 1,666-13, thana Shikarpore, sub-registry office Bettiah. The approximate value given by the decree-holder is Rs. 460.

Sixteen annas of mauza Barearwa, appertaining to mahal Zamera, tappa Chegwan, pargana Mojhwa, tauzi No. 235, Government revenue of mahal Rs. 1,666-13, thana Shikarpore, and sub-registry office Bettiah. The approximate value given by the decree-holder is Rs. 1,000.

Sixteen annas of mauza Ratanpurwa, appertaining to mahal Zamera, tappa Chegwan, pargana Mojhwa, tauzi No. 235, Government revenue of mahal Rs. 1,666-13. The approximate value given by the decree-holder is Rs. 300.

Sixteen annas of mauza Noutanwa, appertaining to mahal Zamera, tappa Mojhwa, tauzi No. 235, Government revenue of mahal Rs. 1,666-13, thana Shikarpore, sub-registry office Bettiah. The approximate value given by the decree-holder is Rs. 300.

Sixteen annas of mauza Matheora, tappa Chegwan, pargana Mojhwa, tauzi No. 235, Government revenue Rs. 1,666-13. The approximate value given by the decree-holder is Rs. 250.

Sixteen annas of mauza Kamhara, appertaining to mahal Zamora, tappa Chegwan, pargana Mojhwa, tauzi No. 235, Government revenue of mahal Rs. 1,666-13. The approximate value given by the decree-holder is Rs. 250.

RAJENDRA NATH DATTA,
Subordinate Judge, 2nd Court, Saran.

Chapra, the 20th June 1905. (742—1)

In the Court of Lala Suraj Narayan, M.A., Munsif, 1st class, district Hissar.

CIVIL SUIT No. 282 OF 1904.

Sampat, son of Nand Ram Mahajan of Nalwa, district Hissar, plaintiff, *versus* Deokaran, son of Salig Ram Mahajan of Dádam, tahsil Bhewani, now dwelling at Gawalanda, district Faridpur.

Claim for recovery of Rs. 65.

WHEREAS the Court is satisfied that the whereabouts of the defendant in the above suit are unknown and that service of the summons cannot in the ordinary way be effected upon him, it is notified that the said defendant must appear in this Court at 10 o'clock on the 6th July 1905, in person or by a pleader or through his duly authorized agent; in case of default the suit shall proceed *ex-parte* against him.

SURAJ NARAYAN.

Given under my hand and the seal of the Court, this 15th day of June 1905. (746—1)

In the Court of Lala Suraj Narayan, M.A. Munsif, 1st Class, Hissar, district Hissar.

CIVIL SUIT No. 203 OF 1905.

Giani Ram, Ude Ram, sons of Ram Gopal, and Hari Charan Das, minor adopted son of Madho Prasad, under the guardianship of Giani Ram Mahajan Agrawal of Bhiwani Halu, district Hissar, plaintiffs, *versus* Janki and Kalu, sons of Chanda Mahajan of Bangla Fazilka, district Firozpur, Partap, son of Chanda and Musammat Chaumeli, widow of Sant Lal Mahajan, now dwelling in Patna, defendants.

Claim for possession of a house situated at Bhewani by right of mortgage.

WHEREAS the Court is satisfied that the whereabouts of Musammat Chaumeli and Partap, defendants in the above suit, are unknown and that service of the summons cannot in the ordinary way be effected upon them, it is notified that the said defendants must appear in this Court at 10 o'clock on the 5th July 1905 in person or by a pleader or through their duly authorized agent; in case of default the suit shall proceed *ex parte* against them.

SURAJ NARAYAN.

Given under my hand and the seal of the Court this 15th day of June 1905. (747—1)

SALE PROCLAMATION.

In the Court of the Munsif, Second Court Kushtia, district Nadia.

EXECUTION CASE Nos. 124, 1247, 1248, 1249 AND 1250 OF 1905.

Babu Jogendra Nath Ray and others of Narail, district Jessore, decree-holders, *versus* Messrs W Howarth & Co. and others of Dhobrakole Factory, p.s. Kumarkhali, district Nadia, judgement-debtors.

THE right, title and interest of the above-named judgement-debtors in the following immovable properties shall be sold for the recovery of Rs. 1,050 by the Nazir of the said Court in the sale-room of the Court on the 21st August 1905 at 1 P.M.:—

Lot No I—In zilla Nadia, police-station and sub-registry Kumarkhali, pargana Berhampore, khas mahal Dhobrakole, bearing tauzi No 3446 of the Nadia Collectorate, holding No. 1 in mauza khas char Dhobrakole. Annual rental payable to the Collector of Nadia is Rs 3,110 3-3 only, area of the lands comprised in the holding being 7,803 bighas. Approximate price Rs. 200.

Lot No. II.—In zilla Nadia, police-station and sub-registry Kumarkhali, pargana Berhampore, khas mahal Dhobrakole, bearing tauzi No. 3446 of the Nadia Collectorate, holding No. 3 in the khas char Dhobrakole, police-station Kumarkhali. Annual rental Rs. 374-2 only, area of the land comprised in the jama being 598 bighas 11 chittaks of land. Approximate price Rs. 200.

Lot No. III.—In zilla Nadia, police-station and sub-registry Kumarkhali, pargana Berhampore, in mauza Dhobrakole in the sherista of late Moharshi Debendra Nath Tagore. Jama of Rs. 68-4 only. Area of the land comprised in the jama being about 100 bighas (more or less) and a pucca house containing 18 rooms, known by the name of Kuti Bari, Dhobrakole, standing thereon. Approximate price Rs. 200 only.

NAGENDRA NATH BHATTACHARJEE,
Munsif, Second Court, Kushtia

Kushtia, the 22nd June 1905. (749—4)

Notification.

TO be peremptorily sold pursuant to a decree and order of the Calcutta High Court, Original Side, made in suit No. 188 of 1903, wherein Rajendra Lall Nandan is the plaintiff and Sreemutty Kusum Moni Dassee, the defendant, and dated respectively the 7th day of May 1903 and the 6th day of March 1905 by the Registrar of the said Court in his sale-room on Saturday, the 5th day of August 1905, at 12 o'clock noon the following property belonging to the defendant:—

Lot I.—No. 92 Aheeretollah Street in the town of Calcutta, a piece of land with a tiled hut with brick-built walls, containing by admeasurement 12 chittacks and 8 square feet, and bounded on the north by No. 91 Aheeretollah Street, on the south and east by Aheeretollah Street, and on the west by a passage.

The abstract of title and conditions of sale may be seen at the office of the said Registrar or at the office of Babu Kumud Nath Ganguli at No. 4 Hastings Street, Calcutta, and will be produced at the sale.

W. R. FINK, Registrar.

Kumud Nath Ganguli, Plaintiff's Attorney.

Calcutta High Court, Original Side, the 14th day of June 1905 (754—1—576)

NOTICE.

Bank of Bengal.

THE Directors have made the following changes in the Bank's European Establishment:—

Mr. H. A. T. Treble to act as Agent at Bombay until further orders, *vice* Mr. B. Hewett, on short leave.

By order of the Directors,
W. D. CRUICKSHANK,
Secretary and Treasurer, Bank of Bengal.

Calcutta, the 22nd June 1905. (743—1)

For the District Board, Gaya.

A CAPABLE and experienced Draftsman required. Pay from Rs. 35 per mensem, rising (by annual increments of Rs. 3) to Rs. 50.

Candidates should apply sharp with certificates qualifying them for the post. Applications with certificates will be received up to 10th July 1905, which will not be returned.

F. MAYNARD, C.E., District Engineer.

Gaya, the 20th June 1905. (741—1)

Wanted

A HEAD MASTER AND A THIRD MASTER for the Barh Bayley H. E. School on a monthly salary of Rs. 60 and Rs. 30 respectively. The selected candidates will have to stick to the posts for one year at least. Applications will be received by the undersigned up to the 5th of July 1905.

JYOTISH CHANDRA SEN,
Secretary, Barh H. E. School.

Patna, P.-O. Barh, the 10th June 1905. (692 3)

Wanted

AN Overseer for the Comilla Municipality on a salary of Rs. 50 and horse allowance Rs. 15 per month on probation for 11 months. Candidates must submit their application with copies of testimonials on or before 2nd July 1905. The selected candidate shall have to give cash security of Rs. 500. Applicants to state age and submit certificates of riding and physical activity.

He must be qualified under rule 7 (2) of Part IX.

(ILLEGIBLE), Chairman, Comilla Municipality.

The 15th June 1905. (702—2)

Notice.

WANTED at once a Treasurer for the first-class Treasury at Cuttack.

The pay of the appointment is Rs. 80 per month, and cash security of Rs. 15,000 is required. There is a prospect of the pay being raised to Rs. 100 per month if additional security of Rs. 5,000 is furnished.

Applications will be received up to the 7th July next by the Collector.

W. F. C. MONTRIOU, Deputy Collector in charge, *for* Collector.

Cuttack Collectorate, the 16th June 1905. (703—3)

WANTED an experienced Correspondence Clerk for the District Engineer's Office, Saran, on a salary of Rs. 50 per month, rising to Rs. 65 by biennial increment of Rs. 2. None need apply who has not occupied a similar post.

Applications in applicant's own handwriting will be received by the undersigned up to 1st July 1905.

E. J. BULL, District Engineer, Saran.

Chapra, the 17th June 1905. (706—2)

WANTED at once for the Chella Charitable Dispensary a qualified Native Doctor on a salary of Rs. 30 a month. Chella is nearly seven miles from the Bolpur Railway Station.

The applications will be received by the Civil Surgeon up to 30th June 1905.

C. C. SINHA, Secretary, Chella Dispensary, Birbhum.

Birbhum District Board's Office, dated Suri, the 13th June 1905. (708—2)

WANTED four Duftaries for the Hooghly Collectorate and Magistracy on a salary of Rs. 8 to Rs. 9 according to qualifications. None need apply who is not thoroughly experienced in binding books and registers, in dusting and arranging rooms, and looking after pens, ink, paper, etc. Applications will be received by the undersigned up to the 10th July 1905.

S. K. GHOSE, *for* Collector, Hooghly.

Hooghly Collectorate, the 17th June 1905. (730—3)

Notice.

WANTED a Peshkar on Rs. 30 per month for the Settlement Office for a period of about six months. Preference will be given to a candidate having previous experience of the work of Settlement Office. Applications will be received by the undersigned till the 6th July 1905.

KALI PROSAD CHATTERJEE, Settlement Officer.

Bogra, Settlement Office, the 19th June 1905. (731—3)

WANTED an experienced teacher, strong in Mathematics, to officiate for one year, in the post of an Assistant Master of the Barisal Zilla School on Rs. 60 with prospect of increment up to Rs. 80 on being made permanent.

Applications with copies of certificates and a statement of age and residence, will be received by the undersigned up to the 15th July 1905.

Preference will be given to an M.A., (in Mathematics) or a B.A., with Honours in Mathematics.

M. U. AHMED, Vice-Chairman,
Joint-Committee, Barisal.

Barisal, the 20th June 1905. (748—3)

Notice.

WANTED an additional Clerk for the Bihar School of Engineering, Bankipore, on a salary of Rs. 25 a month. An experienced man in office work is required. Applications should reach the undersigned before the 15th July 1905.

D. N. MALLIK, Professor in charge,
Bihar School of Engineering.

Bankipore, the 19th June 1905. (755—3)

WANTED a Clerk for the Office of the Superintending Engineer, Gandak Circle, on a salary of Rs. 55 rising to Rs. 85 by a yearly increment of Rs. 6.

The applicant should be able to draft letters in good English and should understand *précis*-writing.

Applications will be received up to 15th July 1905.

T. BUTLER,
Superintending Engineer, Gandak Circle,
Muzaffarpur.

Muzaffarpur, the 24th June 1905. (756—2)

Notice.

WANTED for one year at present, with prospect of being permanent, an Overseer on a salary of Rs. 60 rising to Rs. 100 by annual increment of Rs. 5, and consolidated travelling allowance of Rs. 30 per mensem.

None need apply who is not qualified under rules.

Applications with copies of testimonials will be received by the undersigned till the afternoon of the 10th of July 1905.

S. B. DUTT,
District Engineer.

Comilla, the 24th June 1905. (757—2)

The Palamow Coal Company, Limited.

AT an Extraordinary General Meeting of the above-named Company, duly convened and held at No. 101-1 Clive Street, Calcutta, on the 29th May 1905, the following special Resolution was duly passed, and at a subsequent Extraordinary General Meeting of the members of the said Company, also duly convened and held at the same place on the 16th June 1905, the following Resolution was duly confirmed viz.—

"That the Company be wound up voluntarily and that Mr. W. W. Cunningham of 101-1 Clive Street, Calcutta, be and is hereby appointed Liquidator for the purpose of such winding up without remuneration."

E. CABLE, Chairman.

Calcutta, the 19th June 1905. (711—1—538)

ASUTOSH GHOSH, B.A., B.L., Pleader, Daltonganj, intends to be enrolled as a Vakeel of the High Court, Calcutta. (750—4—575)

In the Court of the Certificate Officer of Bankura.

CERTIFICATE CASE No. 258 OF 1905-1906.

Secretary of State for India in Council, decree-holder, *versus* Srimati Rani Ananda Kumari Devi, judgment-debtor.

NOTICE is hereby given that the undermentioned property of the judgment-debtor will be sold at a public sale in the Court premises by the Certificate Officer at Bankura on the 10th August 1905 at 12 A.M. for the realization of Rs. 629-11-2 in execution of the above decree:—

Thana Bankura, estate Chhatna, bearing tauzi No. 938 of the Bankura Collectorate. Revenue payable for the mahal, Rs. 2,287-1.

RAMENDRA KRISHNA DEB, Collector.

Bankura Collectorate, the 19th June 1905. (728—3)

In the Court of the Certificate Officer of Bankura.

CERTIFICATE CASE No. 265 OF 1905-1906.

Secretary of State for India in Council, decree-holder, *versus* Nolini Nath Sinha Deb, guardian of minor Protap Naran Sinha Deb, judgment-debtor.

NOTICE is hereby given that the undermentioned property of the judgment-debtor will be sold at a public sale in the Court premises by the Certificate Officer of Bankura on the 10th August 1905 at 12 A.M. for the realization of Rs. 425-2-2 in execution of the above decree:—

Thana Vishnupur, estate Jamkundi, bearing tauzi No. 478, residuary, of the Bankura Collectorate. Revenue payable for the mahal, Rs. 965-14-9.

RAMENDRA KRISHNA DEB, Collector.

Bankura Collectorate, the 17th June 1905. (729—3)

NOTICE.

Estate Arthur Weldon, deceased.

PURSUANT to section 320 of Act X of 1865 and section 42 of Act XXVIII of 1866, notice is hereby given that all persons having claims against the estate of *Arthur Weldon, deceased*, formerly a hotel manager at Kurseong, in the district of Darjeeling, and late of No. 40 Gilmore Road, Lewisham in Kent, in England, who died at the Cancer Hospital, Broughton, in London in February 1904, should send in their claims to the undersigned on or before the 15th day of July next, after which date no claim will be admitted and the assets of the estate will be administered.

ORR, DIGNAM & Co.,

Attorneys for H. W. S. Sparkes, the executor.

32, Dalhouse Square, South, 13th June 1905.

(753—1—579)

INSOLVENT NOTICES.

In the matter of JOYGOPAL PAUL, an insolvent.

On Thursday, the 4th day of May last, it was ordered that the matters of the petition of the said insolvent be heard on Tuesday, the 4th day of July next, and that the said insolvent do then attend to be examined before the said Court.

Monmotho Nath Sen, Attorney. (712—2)

In the matter of TULSEE TELLY and another, insolvents.

On Wednesday, the 24th day of May last, it was ordered that the matters of the petition of the said insolvents be heard on Tuesday, the 4th day of July next, and that the said insolvent do then attend to be examined before the said Court.

K. M. Rukshit, Attorney. (713—2)

In the matter of MAHOMED ALA BUKSH, an insolvent.

On Tuesday, the 7th day of March last, it was ordered that the matters of the petition of the said insolvent be heard on Tuesday, the 4th day of July next, and that the said insolvent do then attend to be examined before the said Court.

R. E. Bysack, Attorney. (714—2)

In the matter of HABIB MOHOMMED and others, insolvents.

On Monday, the 15th day of May last, it was ordered that the matters of the petition of the said insolvents be heard on Tuesday, the 4th day of July next, and that the said insolvent do then attend to be examined before the said Court.

Pugh & Co., Attorneys. (715—2)

In the matter of DANIEL SMITH, an insolvent.

On Friday, the 26th day of May last, it was ordered that the matters of the petition of the said insolvent be heard on Tuesday, the 4th day of July next, and that the said insolvent do then attend to be examined before the said Court.

Insolvent in person. (716—2)

In the matter of JAMES MICHAEL DOYLE, an insolvent.

On Tuesday, the 2nd day of May last, it was ordered that the matters of the petition of the said insolvent be heard on Tuesday, the 4th day of July next, and that the said insolvent do then attend to be examined before the said Court.

Insolvent in person. (717—2)

In the matter of SUNTOKH CHAND GOLECHA, an insolvent.

On Thursday, the 25th day of May last, it was ordered that the matters of the petition of the said insolvent be heard on Tuesday, the 4th day of July next, and that the said insolvent do then attend to be examined before the said Court.

Bannerjee & Bannerjee, Attorneys. (718—2)

In the matter of JOHN MACJOHN, an insolvent.

On Monday, the 20th day of March last, it was ordered that the matters of the petition of the said insolvent be heard on Tuesday, the 4th day of July next, and that the said insolvent do then attend to be examined before the said Court.

Pugh & Co., Attorneys. (719—2)

In the matter of WILLIAM SHERHAM, an insolvent.

On Tuesday, the 2nd day of May last, it was ordered that the matters of the petition of the said insolvents be heard on Tuesday, the 4th day of July next, and that the said insolvent do then attend to be examined before the said Court.

C. C. Mitter, Attorney. (720—2)

In the matter of MOTHURARAM TELLY, an insolvent.

On Friday, the 5th day of May last, it was ordered that the matters of the petition of the said insolvents be heard on Tuesday, the 4th day of July next, and that the said insolvent do then attend to be examined before the said Court.

K. M. Rukshit, Attorney. (721—2)

In the matter of SHAIK HINGOO, an insolvent.

On Saturday, the 6th day of May last, it was ordered that the matters of the petition of the said insolvent be heard on Tuesday, the 4th day of July next, and that the said insolvent do then attend to be examined before the said Court.

P. N. Paul, Attorney. (722—2)

In the matter of JASPER LAMPHIER, an insolvent.

On Wednesday, the 10th day of May last, it was ordered that the matters of the petition of the said insolvents be heard on Tuesday, the 4th day of July next, and that the said insolvent do then attend to be examined before the said Court.

Insolvent in person. (723—2)

In the matter of DOYA CHAND KHETAN and another, insolvents.

On Friday, the 5th day of May last, it was ordered that the matters of the petition of the said insolvents be heard on Tuesday, the 4th day of July next, and that the said insolvents do then attend to be examined before the said Court.

K. M. Rukshit, Attorney. (724—2)

In the matter of N. D. SUTHERLAND, an insolvent.

On Thursday, the 1st day of June instant, it was ordered that the matters of the petition of the said insolvent be heard on Tuesday, the 4th day of July next, and that the said insolvent do then attend to be examined before the said Court.

C. A. Smith, Attorney. (725—2)

In the matter of J. A. CASEY, an insolvent.

On Wednesday, the 31st day of May last, it was ordered that the matters of the petition of the said insolvent be heard on Tuesday, the 4th day of July next, and that the said insolvent do then attend to be examined before the said Court.

Insolvents in person. (726—2)

In the matter of CHARAN DAS PAUL, an insolvent.

On Monday, the 29th day of May last, it was ordered that the matters of the petition of the said insolvent be heard on Tuesday, the 4th day of July next, and that the said insolvent do then attend to be examined before the said Court.

Bannerjee Bannerjee, Attorneys. (727—2)

In the matter of SOSHEE BHUSAN COONDOO, and others, insolvents.

On Monday, the 8th day of May last, it was ordered that this matter be heard on Tuesday, the 4th day of July next, and that the said insolvents do then attend to be examined before the said Court.

A. K. Thakur, Attorney. (732—2)

In the matter of KAMINI MOHANA BASU, an insolvent.

On Tuesday, the 23rd day of May last, it was ordered that the matters of the petition of the said insolvent be heard on Tuesday, the 4th day of July next, and that the said insolvent do then attend to be examined before the said Court.

Insolvent in person. (733—2)

In the matter of LUCHMI CHAND and MUDDEN GOPAUL, insolvents.

On Wednesday, the 17th day of May last, it was ordered that the matters of the petition of the said insolvents be heard on Tuesday, the 4th day of July next, and that the said insolvents do then attend to be examined before the said Court.

Insolvents in person. (734—2)

In the matter of JADU NATH SEN GUPTA, an insolvent.

On Wednesday, the 24th day of May last, it was ordered that the matters of the petition of the said insolvent be heard on Tuesday, the 4th day of July next, and that the said insolvent do then attend to be examined before the said Court.

S. D. Dutt & Gupta, Attorneys. (735—2)

In the matter of CECIL MURRAY MORSE PELL and FRANCIS HIGGINS PELL, insolvents.

On Saturday, the 6th day of May last, it was ordered that Tuesday, the 4th day of July next, be appointed for the further hearing of this matter and that unless cause be shown to the contrary on that day the said insolvents be discharged personally as well as to their after acquired property from all liabilities for debts, claims and demands of and against the said insolvents at the time of the filing of their petition for relief. (736—2)

In the matter of GONESH DASS AND OTHERS, insolvents (Hurdeo Das Gurdial).

On Tuesday, the 6th day of June instant, an account of the receipts and disbursements of the Official Assignee from the 30th day of January 1903 to the 31st day of May last, was filed in the Office of the Chief Clerk, and it was ordered that Tuesday, the 4th day of July next, be appointed for the further hearing of this matter for the purpose of making a dividend.

☞ Any creditor or other person interested who may intend to establish or oppose any claim upon the estate of the said insolvents may attend and be heard, having given notice to the Chief Clerk three clear days before the day of heading.

A. B. Miller, Official Assignee. (758—1)

In the matter of THOMAS ALEXANDER BLAKE, an insolvent.

On Tuesday, the 6th day of June instant, an account of the receipts and disbursements of the Official Assignee from the 14th day of January 1903 to the 31st day of May last, was filed in the Office of the Chief Clerk, and it was ordered that Tuesday, the 4th day of July next, be appointed for the further hearing of this matter for the purpose of making a dividend.

☞ Any creditor or other person interested who may intend to establish or oppose any claim upon the estate of the said insolvent may attend and be heard, having given notice to the Chief Clerk three clear days before the day of hearing.

A. B. Miller, Official Assignee. (759—1)

In the matter of KANJEE JESHA and others, insolvents.

On Tuesday, the 6th day of June instant, an account of the receipts and disbursements of the Official Assignee from the 9th day of February 1904 to the 31st day of May last was filed in the Office of the Chief Clerk, and it was ordered that Tuesday, the 4th day of July next, be appointed for the further hearing of this matter for the purpose of making a dividend.

☞ Any creditor or other person interested who may intend to establish or oppose any claim upon the estate of the said insolvent may attend and be heard, having given notice to the Chief Clerk three clear days before the day of hearing.

A. B. Miller, Official Assignee. (760—1)

In the matter of SIR ALLAN ARTHUR, KT., an insolvent (separate estate).

On Tuesday, the 6th day of June instant, an account of the receipts and disbursements of the Official Assignee from the 1st day of December 1904 to the 31st day of May last was filed in the Office of the Chief Clerk, and it was ordered that Tuesday, the 4th day of July next, be appointed for the further hearing of this matter for the purpose of making a dividend.

☞ Any creditor or other person interested who may intend to establish or oppose any claim upon the estate of the said insolvent may attend and be heard, having given notice to the Chief Clerk three clear days before the day of hearing

A. B. Miller, Official Assignee. (761—1)

In the matter of RADHA KISSEN MEMANY, an insolvent (Radhakissen Jetmull).

On Tuesday, the 6th day of June instant, an account of the receipts and disbursements of the Official Assignee from the 1st day of July 1902 to the 31st day of May last was filed in the Office of the Chief Clerk, and it was ordered that Tuesday, the 4th day of July next, be appointed for the further hearing of this matter for the purpose of making a dividend.

☞ Any creditor or other person interested who may intend to establish or oppose any claim upon the estate of the said insolvent may attend and be heard, having given notice to the Chief Clerk three clear days before the day of hearing.

A. B. Miller, Official Assignee. (762—1)

In the matter of JOHN MICHAEL TALBOT, an insolvent.

On Tuesday, the 6th day of June instant, an account of the receipts and disbursements of the Official Assignee from the 15th day of March 1904 to the 31st day of May last was filed in the Office of the Chief Clerk, and it was ordered that Tuesday, the 4th day of July next, be appointed for the further hearing of this matter for the purpose of making a dividend.

☞ Any creditor or other person interested who may intend to establish or oppose any claim upon the estate of the said insolvent may attend and be heard, having given notice to the Chief Clerk three clear days before the day of hearing.

A. B. Miller, Official Assignee. (763—1)

In the matter of RASH BEHARI DEY an insolvent.

Notice that an application for an *ad interim* protection order has been this day made by the said insolvent and that such application will be heard and disposed of by the Acting Commissioner of the Insolvent Court on Monday, the 3rd day of July next, at the hour of half-past 10 o'clock in the forenoon.

☞ "Any creditor of the said insolvent desirous of opposing such application must appear before the said Court at the time and place aforesaid."

S. C. Basak, Attorney. (764—1)

In the Court of the District Judge of Hooghly.

In the matter of Shyama Charan Das, an insolvent.

SHYAMA CHARAN DAS, of Nabagram, thana Serampore, district Hooghly, was, on the 16th day of June 1905, declared an insolvent and discharged under section 351, Civil Procedure Code, on the 21st idem.

G. K. DEB, District Judge.

Hooghly District Judge's Court, the 22nd June 1905. (745—1—578)

NOTICE.

In the Court of the District Judge of Noakhali.

INSOLVENCY CASE No 4 OF 1905.

PARBOTI CHARAN NAHA, son of Shib Chandra Naha of Amishapara, station Begumganj, in the district of Noakhali, was declared an insolvent on the 10th June 1905, and Nazir of this Court was appointed Receiver in the case.

RAJENDRA COOMAR BOSE, District Judge.

Noakhali, the 17th June 1905. (752 - 1 - 577)

Insolvency Notice.

NOTICE is hereby given that the undermentioned dividend is lying unclaimed :—

Estate Chooneelall Oswal and others, insolvents.

Nos.	Names of creditors.	Amount of claim.	1st dividend at Re. 10 per cent.
		Rs. A. P.	Rs. A. P.
1	Bhimraj Hookum Chand ...	27,000 0 0	2,700 0 0
3	Allen Brothers	4,227 3 0	422 11 6
4	Soobul Chunder Chunder ...	6,518 2 3	651 13 0
5	Ullmann, Hirschhorn & Co. ...	979 0 0	97 14 5
6	Kettlewell, Bullen & Co. ...	2,877 0 0	287 11 2
7	Kerr, Tarruck & Co.	1,050 10 0	105 1 0
8	Anderson, Wright & Co. ...	961 4 0	96 2 0
9	Schroder, Smidt & Co.	984 6 0	98 7 6
10	Manick Chand, Tarra Chand ...	5,477 6 0	547 11 10
11	B. Mookerjee	611 14 0	61 3 0
12	Johurmull Soogun Chand ...	2,468 1 6	246 12 11
15	Pem Chand Meeraj	726 12 0	72 10 10
18	Bhinjraj Soolianmull	3,000 0 0	300 0 0
19	Kalooram Nathmull ...	2,500 0 0	250 0 0

A. B. MILLER, Official Assignee.

Calcutta, the 20th June 1905. (738—1)

CALCUTTA POST OFFICE NOTICE.

Mails for—	Date and hour of closing at the General Post Office, Calcutta.		Route by which despatched.
	1905.	P.M.	
United Kingdom, Aden, Egypt, Europe, America, West Africa *vid* United Kingdom and East Africa *vid* Aden (and also South Africa, if superscribed on the cover *vid* United Kingdom or Aden).	June 29	At 6 30	Per P. & O. steamer from Bombay.
Parcels and money-orders for the United Kingdom and other Foreign places.	,, 28	Parcels, 5 P.M.; M.-O., 4 P.M.	Ditto ditto.
*Australasian Colonies ...	July 3	At 7-30	*Vid* Tuticorin and Colombo.
†Straits Settlements (also China and Japan, if the Steamer's name is superscribed on the cover).	June 30	,, 8-30	Per steamer *G. Apcar*.
Burma	,, 29	,, 7-30	Per B. I. S. N. Co.'s steamer.
Burma, Penang and Singapore.	July 1	,, 7-30	
Akyab, Kyaukpyu and Sandoway.	June 30	,, 7-30	
Burma, Tavoy and Mergui ...	July 3	,, 7-30	
Mauritius, Reunion, Mayotte, and Nossi-Be.	,, 1	,, 7-30	Per steamer *Surada* from Colombo.
Mauritius, Reunion, Mayotte, and Nossi-be (Supplemental)	,, 2	,, 7-30	
Port Blair	June 30	,, 7-30	*Vid* Madras

* Although the date entered in column 2 is, as far as can be calculated, the latest safe date of posting for the next Mail steamer, full allowance being made for the steamer being in advance of her published timing, Mails for the places mentioned in column 1 are despatched daily to Tuticorin, so that they may proceed by any steamer from Colombo that has been unusually accelerated or retarded, or by any special opportunity that may be afforded by a steamer not belonging to one of the regular lines.

† Correspondence for China and Japan is despatched daily to Tuticorin, so that it may proceed by the first steamer from Colombo.

1. The letter-box for inland articles will be cleared for the forenoon Mails at the following hours :—

For Goalundo, Arakan and Chittagong, at 5-45 A.M.

For Midnapore and Orissa districts, at 9 A.M.

For the Eastern districts, as far as Dacca and Mymensingh, at 6-15 A.M.

For Khulna and Jessore districts, at 7 A.M.

For Bombay, Central Provinces and Midnapore *vid* Bengal-Nagpur Railway, at 11-15 A.M., and with a late fee of ½ anna up to 11-40 A.M.

2. The letter-box will be cleared for the evening Mails at the following hours, viz.—

For the East Indian Railway Loop Mail, at 2-30 P.M., and with a late fee of ½ anna up to 2-55 P.M.

For the Northern Bengal, Darjeeling and Assam Mails, at 3-25 P.M., and with a late fee of ½ anna up to 3-50 P.M.

For the Bombay Mail *vid* Jubbulpore, at 6 P.M., and with a late fee of ½ anna up to 6-30 P.M.

For the Punjab Mail, at 7-30 P.M.
For Midnapore, Orissa, Madras Presidency and Ceylon, at 7-30 P.M.
For the Khulna Mail, at 7-30 P.M.
For the Eastern Bengal Mail, Darjeeling, and places on the Darjeeling-Himalayan Railway, at 7-30 P.M

} and with a late fee of ½ anna up to 8 P.M. and with a late fee of 1 anna up to 8-45 P.M.

3. Late registered letters will be received between the following hours :—

For the Bombay Mail *vid* Jubbulpore, from 5 P.M. to 6-15 P.M.

For the Punjab Mail, from 6 P.M. to 7 P.M.

For the Eastern Bengal Mail, from 6 P.M. to 7 P.M.
For the Khulna Mail, from 6 P.M. to 7 P.M.

For Midnapore, Orissa, Madras Presidency and Ceylon, from 6 P.M. to 7 P.M.

NOTE.—The late fee on each registered letter will be 2 annas, which must be prepaid in stamps on the letter.

4. Articles for Burma and for Port Blair by sea are received without late fee up to 7-30 P.M., and with a late fee of ½ anna up to 8 P.M.

5. On the latest safe day of despatch of Mails for the Australasian Colonies, or any other Foreign Countries, *vid* Madras or Tuticorin, the letter-box for Foreign articles will be cleared for the last time at 7-30 P.M., and late letters and papers fully prepaid will be received up to 8-45 P.M.

6. On the day of despatch of the Mail for Europe (Thursday) the letter-box for Foreign articles will be cleared for the last time for articles, without the late fee, at 6-30 P.M., and late letters and papers fully prepaid will be received up to 6-45 P.M. Late registered articles will be received from 5 to 6 P.M. On the day of despatch of any Foreign Mail by sea, the letter-box will be cleared for the last time, without the late fee, up to 8-30 P.M., and late letters and papers up to 9 P.M. The late fee for Foreign articles is 4 annas, which must be prepaid in stamps affixed to the articles.

CALCUTTA G. P. O., *The 26th June 1905.* } JOHN OWENS, *Presidency Postmaster.*

THE INDIAN LAW REPORTS.

Published in FOUR SERIES, viz.

CALCUTTA, MADRAS, BOMBAY AND ALLAHABAD.

THE Indian Law Reports, published under the authority of the Governor General in Council, are printed in monthly Parts, which are issued, as soon as possible after the first of each month, at Calcutta, Madras, Bombay and Allahabad, respectively.

The Reports comprise four Series—one for the Calcutta High Court, a second for the Madras High Court, a third for the Bombay High Court, and a fourth for the Allahabad High Court.

The cases heard by the Privy Council on appeal from each High Court are reported in the Series for that High Court. Cases heard by the Privy Council on appeal from Provinces in India not subject to any High Court are reported in the Calcutta Series.

The Calcutta Series is distributed by the Bengal Secretariat Book Depôt and the Madras, Bombay and Allahabad Series are distributed direct from Madras, Bombay and Allahabad, respectively.

Persons desiring to subscribe for or purchase the Reports should apply to—

the Officer in charge, Bengal Secretariat Book Depôt, Calcutta, or

the Superintendent, Government Press, Madras, or

the Superintendent, Government Central Press, Bombay, or

the Curator of Government Books, United Provinces of Agra and Oudh, Allahabad

PRICES.

THE terms of subscription, and the terms on which current issues and back numbers are sold, are as follows:—

	Without postage.	With Indian postage.	With Foreign postage.
COMPLETE SERIES—	Rs. A. P.	Rs. A. P.	Rs. A. P.
Current issues, per annum	.....	24 8 0	28 0 0
Back numbers, per annum	20 0 0	22 8 0	28 0 0
CALCUTTA SERIES—			
Current issues or back numbers, per annum ..	10 0 0	12 8 0	14 0 0
MADRAS, BOMBAY or ALLAHABAD SERIES—			
Current issues or back numbers, per annum ...	6 0 0	7 0 0	8 0 0
ANY MONTHLY PART—			
Calcutta Series	2 0 0	2 0 0	2 0 0
Madras Bombay or Allahabad Series	1 0 0	1 0 0	1 0 0

All payments must be made in advance. Remittances to Calcutta should be addressed to the TREASURER, BENGAL SECRETARIAT, *Writers' Buildings, Calcutta*

PARTS OUT OF STOCK AND DUPLICATE COPIES.

WHEN a requisition is received for any set of the Reports, and any Parts are out of stock, the following deduction from the foregoing rates is made for such Parts:—

	Without postage.	With Indian postage.
CALCUTTA SERIES—	Rs. A. P.	Rs. A. P.
All Parts for one year	7 2 6	8 6 3
Any one Part	0 8 9	0 10 3
MADRAS, BOMBAY or ALLAHABAD SERIES—		
All Parts for one year	4 4 6	4 11 3
Any one Part	0 5 3	0 5 9

If any Part is lost in transit to a subscriber, and the fact is reported to the office of distribution within three months from the date of publication, a duplicate will be supplied at the following rate:—

	Without postage.	With Indian postage.
	Rs. A. P.	Rs. A. P.
CALCUTTA SERIES	0 8 9	0 10 3
MADRAS, BOMBAY or ALLAHABAD SERIES	0 5 3	0 5 9

REPRINTS.

THE Complete Series for the years 1876 to 1881, 1883, 1886, 1888, 1890, 1892 to 1896 and 1899 to 1903 has been reprinted, and may be purchased at the Bengal Secretariat Book Depôt, Calcutta, either wholly or in part. All Parts required to complete the stock of the Reports for other years are now being reprinted. Complete Reports from the beginning to date will therefore shortly be available at the Bengal Secretariat Book Depôt.

ADVERTISEMENTS FOR THE CALCUTTA SERIES.

ADVERTISEMENTS of law publications only are received. Rates can be ascertained on application to the Bengal Secretariat Book Depôt.

THE BENGAL LAW REPORTS.

SEVERAL volumes of the Bengal Law Reports, from August 1868 to December 1875, and Full Bench Rulings, Parts I and II, are available at the Bengal Secretariat Book Depot, Calcutta, at the following rates:—

	Without postage.	With Indian postage.
	Rs. A. P.	Rs. A. P.
BENGAL LAW REPORTS, for one year ...	20 0 0	22 8 0
Single copies, each	2 0 0	2 0 0
FULL BENCH RULINGS Part I and II ..	20 0 0	22 8 0

Pure Sulphate of Quinine and Sulphate of Cinchonidine.

MANUFACTURED AT THE BENGAL GOVERNMENT CINCHONA PLANTATION

FROM 1st April 1905 the price of these articles will be as follows:—

Quinine.

1	Pound tin,	Rs. 16,	or, post free,	Rs. 16-8.			
½	,,	,,	,,	8	,,	,,	,,	,,	8-6.
¼	,,	,,	,,	4	,,	,,	,,	,,	4-6.

Cinchonidine.

1	Pound tin,	Rs. 12,	or, post free,	Rs. 12-8.			
½	,,	,,	,,	6	,,	,,	,,	,,	6-6.
¼	,,	,,	,,	3	,,	,,	,,	,,	3-6.

Analysis shows these articles to be of the purest manufacture; and they are guaranteed to be free from wilful admixture with the inferior alkaloids. They are for sale only to Government officers, and only for cash, and may be had from the Superintendent, Botanic Garden, Sibpur, near Calcutta. Cinchonidine can also be purchased by dealers at the following rates:—

1	Pound tin,	Rs. 16,	or, post free,	Rs. 16 8.			
½	,,	,,	,,	8	,,	,,	,,	,,	8-6.
¼	,,	,,	,,	4	,,	,,	,,	,,	4-4.

Cinchona Febrifuge.

Cinchona Febrifuge can be purchased by all Government officers and by any one taking *five pounds* and upwards at a time from the Superintendent, Botanic Garden, Calcutta, at the following rates—per four-ounce tin, Re. 1 ans. 14; per eight-ounce tin, Rs. 3 ans. 12; per pound tin, Rs. 7 ans. 8; the general public can be supplied by the Superintendent, Botanic Garden, *for cash only*, at the undernoted rates—per four-ounce tin, Rs. 2 ans. 4; per eight-ounce tin, Rs 4 ans. 8; per pound tin, Rs. 9. This medicine is also sold by the principal European and Native druggists in Calcutta. Postage, four annas per four-ounce tin; six annas per eight-ounce tin; and eight annas per pound tin, in addition to the foregoing rates.

THE CALCUTTA GAZETTE.

The 1st March 1901.—From this date the subscription to, and postage for, the *Calcutta Gazette* will be at the following rates, payable in advance:—

PER ANNUM.	For Calcutta.	For the Mufassal including postage.
	Rs. A.	Rs. A.
Entire *Gazette*	15 0	20 0
Parts I, Ia and Ib together ...	5 0	7 8
Part II	1 0	2 12
Parts III, IV and IVA together	4 0	6 0
,, V and VI together ..	2 0	3 0
Appendix (Marine Notifications)	1 0	2 12
Supplement	5 0	7 8
PER ISSUE.		
Entire *Gazette*	0 8	0 10
Supplement	0 4	0 5

N B.—Separate Parts of each issue of the *Gazette*, and occasionally important Rules and Extracts, can be obtained from the Officer in charge, Bengal Secretariat Book Depôt, at the rate of one anna for every sixteen pages or a fraction thereof. Postage according to weight.

RATES FOR ADVERTISEMENTS in the *Calcutta Gazette*.—

Full page, per issue	Rs 20
Half ,, ,, ,, ...	,, 10

Casual advertisements, 4 annas per line per insertion.

Parts I, II, and III of a Descriptive Catalogue of the Sanskrit Manuscripts in the Library of the Calcutta Sanskrit College, prepared by Pandit Hrishikesa Sastri and Babu Siva Chandra Gui, M.A., B.L., of that College, are offered to the public for sale. The Catalog being to be completed in 23 parts, the price of each part used is 12 annas a copy, exclusive of postage. Copies can be obtained from the Principal of the Sanskrit College, Calcutta.

GOVERNMENT PUBLICATIONS FOR SALE

At the Bengal Secretariat Book Depôt, Writers' Buildings, Calcutta, and by the following Agents :—

AGENTS IN INDIA.

Messrs. Thacker, Spink & Co., Calcutta and Simla.
Messrs. Newman & Co., Calcutta.
Messrs Higginbotham & Co., Madras.
Messrs. Thacker & Co., Ld., Bombay
Messrs. A. J. Combridge & Co., Bombay.
The Superintendent, American Baptist Mission Press, Rangoon.
Mrs. Radhabai Atmaram Sagoon, Bombay.
Messrs. R. Cambray & Co., Calcutta.
Rai Sahib M. Gulab Singh & Sons, Proprietors of the Mufid-i-am Press, Lahore, Punjab.
Messrs. S. K. Lahiri & Co., Printers and Booksellers, College Street, Calcutta.
Messrs. V. Kalyanarama Iver & Co., Booksellers, &c., Madras.
Messrs. D. B. Taraporevala, Sons & Co., Booksellers, Bombay.
Messrs. G. A. Natesan & Co., Madras.
Mr. N. B. Mathur, Superintendent, Nazir Kanum Hind Press, Allahabad.
The Calcutta School Book Society.

AGENTS IN ENGLAND.

Mr. E. A. Arnold, 41 and 43 Maddox Street, Bond Street, London, W.
Messrs. Constable & Co., 16 James Street, Hay Market, London, W.
Messrs. Kegan Paul, Trench, Trübner & Co., Charing Cross Road, London.
Mr. B. Alfred Quaritch, 15 Piccadilly, London.
Messrs. P. S. King & Son, 2 & 4 Great Smith Street, Westminster, London.
Messrs. H. S. King & Co., 65 Cornhill, London
Mr. B. H. Blackwell, 50-51, Broad Street, Oxford.
Messrs. Deighton Bell & Co., Cambridge.

AGENTS ON THE CONTINENT.

Messrs. R. Friedländer & Sohn, Berlin, N. W. Carlstrasse, 11.
Mr. Otto Harrassowitz, Leipzig.
Mr. Karl Hiersemann, Leipzig.
Mr. Ernest Leroux, 28 Rue Bonaparte, Paris.
Mr. Martinus Nijhoff, The Hague.

NOTICE.—Books required for private use can be purchased. Applications should be accompanied by remittance in each case.

All remittances on account of subscriptions to, or prices of, Gazettes, Indian Law Reports or other Government publications available for sale at the Bengal Secretariat Book Depôt, or for cost of advertisements published in the Gazettes should, in future, be made payable to the "Treasurer, Bengal Secretariat, Calcutta." Advices of such remittances, if separately sent, should be addressed to the "Accountant, Bengal Secretariat." All advertisements intended for publication in the *Calcutta* or *Bengali Gazette* should be sent direct to the Superintendent, Government Printing, Bengal.

Books required for the Public Service should be obtained through the Heads of Departments.

☞ *The amounts within parentheses are for packing and postage.*

NEW PUBLICATIONS ISSUED DURING THE CURRENT QUARTER.

APPOINTMENT DEPARTMENT.

Quarterly Civil List for Bengal, corrected up to 1st April 1905. Rs. 3. (4*a*.)

FINANCIAL DEPARTMENT.

Report on the Maritime Trade of Bengal for the official year 1904-05. F'cap. Paper cover Re. 1 (2*a*.).

GENERAL DEPARTMENT.

Kurukh Folk-lore in the original collected and transliterated by Revd. Ferd Hahn. F'cap. 4to, cloth. Rs. 2. (3*a*.)
List of officers in the Subordinate Educational Service, Bengal, corrected up to 1st April 1905. F'cap Paper cover. As. 8 (1*a*.).

LEGISLATIVE DEPARTMENT.

The Sunderbans Act 1905 (Ben. Act I of 1905) in English, Bengali or Hindi. 6*p*. (1*a*.)
The Bengal Repealing Act 1905 (Ben. Act II of 1905) in English, Bengali or Hindi. 6*p*. (1*a*.)
The Chota Nagpur Rural Police Act, 1887 (Bengal Act V of 1887), as modified up to 1st June 1904, in Bengali. As. 2-6. (1*a*.).
The Bengal Smoke Nuisances Act 1905 (Bengal Act III of 1905) in English or Hindi. As. 2 (1*a*.).
The Indian Paper Currency Act 1905 (III of 1905) in Bengali or Uriya. As. 2. (1*a*.)
Ditto ditto in Hindi. As. 2-6. (1*a*.)
The Indian Railway Boards Act 1905, (IV of 1905) in Bengali, Hindi or Uriya. 6*p*. (1*a*.)

POLITICAL DEPARTMENT.

Administration Report on the Jails of Bengal for the year 1904. F'cap., boards. Paper cover. Rs. 3 (4*a*.).

PUBLIC WORKS DEPARTMENT.

Classified List and Distribution Return of the Bengal Public Works Department, Establishment, corrected up to 31st March 1905. As. 4. (2*a*.)

REVENUE DEPARTMENT.

A Monograph on Gold and Silver Work in the Bengal Presidency. By D. N. Mookherjee, Assistant Director, Land Records and Agriculture. F'cap. Paper cover. Re. 1-8. (2*a*.)
Annual Report on the Survey Operations in Bengal during the year 1903-04. F'cap. Paper cover. Re. 1 (2*a*.).
Annual Progress Report on Forest Administration in the Lower Provinces of Bengal for the year 1903-04. F'cap. Paper cover. Re. 1-4 (2*a*.).
Annual Report of the Director of the Department of Land Records and Agriculture, Bengal, on Settlements and Land Records for the year ending 30th September 1904. F'cap. Paper cover. As. 8 (2*a*.).

An account of the Research work in Indigo carried out at Dalsing Sarai Research Station under subsidy of the Government of Bengal from 1903 to March 1904. By J. Wood-well Bloxam and H. M. Leake. F'cap. Boards. Paper cover. Re. 1. (1s.)
Report on an inquiry into the state of the Tasar Silk industry in Bengal and the Central Provinces of India. By N. G. Mukerjee. F'cap. Paper cover. Re. 1. (2s.)
Annual Report of the Burdwan Experimental Farm for the year 1903-04. F'cap. Paper cover. As. 8. (1s.)

NEW PUBLICATIONS ISSUED BETWEEN 1ST OCTOBER 1904 AND THE 31ST MARCH 1905.

APPOINTMENT DEPARTMENT.

Quarterly Civil List of Bengal, corrected up to 1st January 1905. Re. 1. (4s.)

FINANCIAL DEPARTMENT.

Report on the Road and Public Works Cess Operations of the Lower Provinces for the official year 1903-04. F'cap. Paper cover. Re. 1. (2s.)
Report on the Administration of the Excise Department in the Lower Provinces of Bengal for the year 1903-04. F'cap. Paper cover. Re. 1. (2s.)

GENERAL DEPARTMENT.

Report on Inland Emigration during the year ending 30th June 1904. F'cap. Paper cover. As. 8. (1s.)
General Report on Public Instruction in Bengal for 1903-04. F'cap. Paper. Re. 1-8. (2s.)
List of Officers in the Subordinate Educational service, Bengal, corrected up to 1st January 1905. As. 8. (1s.)
Bengal Administration Report, 1903-04. F'cap. Cloth. Re. 1. (1s.)

JUDICIAL DEPARTMENT.

Annual Report on the Police Administration of the Town of Calcutta and its suburbs for the year 1903. F'cap. Paper cover. Re. 1. (2s.)

LEGISLATIVE DEPARTMENT.

The Chota Nagpur Landlord and Tenant Procedure Act (Bengal Act I of 1879), modified with notes by H. W. C. Carnduff. Re. 1-8. (2s.)
The Indian Emigration (Amendment) Act 1904 (XII of 1904) in Bengali, Hindi or Uriya. As. 12. (1s.)
The Indian Stamp (Amendment) Act 1904 (XV of 1904) in Bengali, Hindi or Uriya. As. 12. (1s.)
The Local Authorities Loans Act 1905 (I of 1905) in Bengali, Hindi or Uriya. As. 12. (1s.)
The Indian Universities Validation Act 1905 (I of 1905) in Bengali, Hindi or Uriya. As. 12. (1s.)
The Stage Carriages Act 1861 (XVI of 1861) as modified up to 1st February 1905, in Hindi. As. 3. (1s.)
The Indian Evidence Act 1872 (I of 1872) as modified up to 1st November 1902, in Hindi. As. 14 (1s.)
The Indian Explosives Act 1884 (IV of 1884) as modified up to 1st December 1903, in Hindi. As. 2. (1s.)
The Bengal Tenancy Act 1885 (VIII of 1885) as modified up to 1st December 1903, in Uriya. Re. 1. (2s.)
The Indian Railway Act 1890 (IX of 1890) as modified up to 1st May 1905 and corrected up to the 1st December 1903, in Hindi. As. 8. (1s.)

MUNICIPAL DEPARTMENT.

List of qualified Medical Practitioners in Bengal, 1904. Royal 8vo. Boards. Paper cover. Re. 1. (2s.)
Resolution reviewing the working of Municipalities in Bengal during the year 1903-04. F'cap. Paper cover. Re. 1. (2s.)
Resolution reviewing the Reports on the working of District Boards in Bengal during the year 1903-04. F'cap. Paper cover. Re. 1. (1s.)

PUBLIC WORKS DEPARTMENT.

Conditions under which Electric Meters and other instruments will be accepted for testing in the Government Electrical Laboratory, Calcutta, and Table of Fees. F'cap. Paper cover. 1s. (1s.)
Revenue Report of the Government of Bengal, Public Works Department, Irrigation Branch, for the year 1903-04. F'cap. Boards. Paper cover. Re. 1. (3s.)
Classified List and Distribution Return of Establishment of the Public Works Department, Bengal, corrected up to 31st December 1904. Re. 1. (2s.)
Resolution on the Embankment and Drainage Reports of the Government of Bengal, Irrigation Department, for the year 1903-04. F'cap. Boards. Paper cover. Re. 1. (2s.)

REVENUE DEPARTMENT.

Annual Report on the Survey Operations in Bengal during 1903-04 (from October 1903 to September 1904). F'cap. Paper cover. Re. 1. (2s.)
Final report on the Survey and Settlement Operations in the Saran District, 1893 to 1901, by J. H. Kerr, Esq., Settlement Officer, North Bihar. F'cap. Boards, paper cover. Re. 1-8. (6s.)
Final report on the Survey and Settlement Operations in the Darbhanga District, 1890 to 1903, by J. H. Kerr, Esq. F'cap. Boards, paper cover. Re. 1. (5s.)
Abstract of the Indian Factories Act, 1881, in sheet form, for hanging up in Factories. In English and Hindi and Urdu. As. 4. (1s.) unmounted. Re. 1-4 mounted.
Agricultural Statistics of the Lower Provinces of Bengal for 1903-04. F'cap. Paper cover. As. 8. (1s.)
Report on Wards and attached Estates in the Lower Provinces for the year 1903-04. F'cap. Paper cover. Re. 1-8. (2s.)
Report on the Land Revenue Administration of the Lower Provinces for the year 1903-04. F'cap. Paper cover. Re. 1. (2s.)

STATISTICAL DEPARTMENT.

The Trade of Bengal with Nepal, Thibet, Sikkim and Bhutan for the year ending March 1904. Boards. Paper cover. Re. 1-2. (2s.)
Report on the Trade carried by Rail and River in Bengal in the official year 1903-04. F'cap. Board. Paper cover. Re. 1. (5s.)

OLDER PUBLICATIONS.

A General Catalogue of all Government Publications (corrected up to 30th June 1904) may be obtained *gratis* on application to the Officer in charge, Bengal Secretariat Book Depôt.

Publications for sale at the office of the Chief Inspector of Explosives with the Government of India.

Rules for the manufacture, possession and sale of explosives issued by each of the Local Governments and Administrations. Price 12s.

Rules for the transport and importation of explosives issued by the Government of India Price 12s

Rules for the transport and importation of explosives at the Port of Calcutta. Price 4s

Publications for sale at the Custom House, Calcutta.

Review of the Maritime Trade of Bengal and its Chief Port (Calcutta) for the year 1904-05. Price Re. 1.

Annual Statement of the Sea-borne Trade and Navigation of Bengal, Foreign and coasting combined in one volume, for the year 1903-04. Price Rs. 6.

Ditto for 1904-05 will be ready early in September. Price Rs. 6.

Previous years' volumes can be obtained at the same price.

GOVERNMENT PUBLICATIONS FOR SALE

BY THE SUPERINTENDENT OF GOVERNMENT PRINTING, INDIA.

8 HASTINGS STREET, CALCUTTA.

A General Catalogue of all Government Publications may be obtained gratis from the Government Central Press, Calcutta.

All books published by the Superintendent of Government Printing, India, can be purchased, either directly or through the following or any other booksellers:—

AGENTS IN EUROPE.

Mr. E. Arnold, 41 and 43 Maddox Street, Bond Street, W. London.

Messrs. Constable & Co., 16 James Street, Haymarket, W., London.

Messrs. Kegan Paul, Trench, Trubner & Co., Charing Cross Road, London.

Mr. Bernard Quaritch, 15 Piccadilly, London.

Messrs P. S. King and Son, 2 & 4 Great Smith Street, Westminster

Messrs. H. S King & Co., 65 Cornhill, and 9 Pall Mall, London.

Messrs. Grindlay & Co., 54 Parliament Street, London, S W., Agents for the sale of the Army List.

Mr. Otto Harrassowitz } Leipzig.
Mr Karl Hiersemann }

Messrs. R. Friedlander & Sohn, Berlin, W. N. Carlstrasse, 11

Mr. Ernest Leroux, 28 Rue Bonaparte, Paris.

Mr. Martinus Nijhoff, Hague, Holland

Mr. B. H. Blackwell, 50 & 51 Broad Street, Oxford.

Messrs. Deighton Bell & Co., Cambridge.

AGENTS IN INDIA.

Messrs. Thacker, Spink & Co., Calcutta and Simla.

Messrs. Newman & Co., Calcutta.

Messrs. R. Cambray & Co., Calcutta.

Messrs. S. K. Lahiri & Co., Calcutta.

Eveyln, Hubert, & Co.,* 149, Dhurmotollah Street, Calcutta.

Messrs. Higginbotham & Co., Madras.

Messrs. V. Kalyanarama Iyer & Co., Madras.

Messrs. G. A. Natesan & Co., Madras.

Messrs. Thacker & Co., Ld., Bombay

Messrs. A. J. Combridge & Co., Bombay.

Messrs. D. B. Taraporevala, Sons & Co., Bombay.

Mrs. Radhabai Atmaram Sagoon, Bombay.

Superintendent, American Baptist Mission Press, Rangoon.

Rai Sahib M. Gulab Singh & Sons, Mufid-i-Am Press, Lahore.

Mr. N. B. Mathur, Superintendent, Nasair Kanun Hind Press, Allahabad.

Manager, Educational Book Depots, Nagpur and Jubbulpore.*

Manager of the Imperial Book Depot, 63 Chandny Chauk Street, Delhi.*

Manager, "East Coast News," Visagapatam.*

Manager, "The Agra Medical Hall and Co-operative Association, Limited" (Successors to A. John & Co., Agra).*

Mr. T. K. Seetharama Aiyar, Kumbakonam.*

Lala Debi Prasad, Vakil and Manager of Law Press, Cawnpore.*

Superintendent, Basel Mission Book and Tract Depository, Mangalore.*

Messrs. P. Varadachary & Co., Madras.*

Mr. Sunder Pandurang, Bombay.*

The Mercantile Mission Branch, Calicut.*

H. Dowman, Esq. (late Extra Assistant Superintendent, Survey of India), Allahabad.*

H. Liddell, Esq., Printers, etc., 7, South Road, Allahabad.*

* Agents for sale of the Legislative Department publications.

NOTICE.—Books and Acts required for private use only can be purchased. Applications should be accompanied by a remittance, unless it is wished that the books should be sent by value-payable post, in which case, besides the ordinary postage, an additional charge is made for registration and commission.

Books and Acts required for the public service should be obtained through Local Governments to whom the applicant is subordinate.

Application for Government publications which are no longer in print should be made to the Agents of the particular Government under whose orders they were originally issued.

(The amounts within parentheses are for packing and postage.)

List of New Books published during the Current Quarter

LEGISLATIVE DEPARTMENT.

The Bengal Code, Vol. II. 3rd Edition, 1905. (Now ready). Cloth. Super-Royal 8vo. Rs. 6 or 9s. (10a.)

The Bengal Code, Vol. III. 3rd Edition, 1905. (Now ready.) Cloth. Super-Royal 8vo. Rs. 6 or 9s. (10a.)

The Ajmere Code, 3rd Edition, 1905. Cloth. Super-Royal 8vo. Rs. 2-8 or 3s. 9d. (7a.)

Act XIII of 1885, The Indian Telegraph Act, 1885, as modified up to 1st March 1905. 5a. (1a.)

Act III of 1900. The Prisoners Act, as modified up to 1st March 1905. 6a. 6p. (1a.)

Act XIX of 1850 (Concerning the binding of apprentices) as modified up to 1st May 1905. 3a. 6p. (1a.)

HOME DEPARTMENT.

Scientific Memoirs by Officers of the Medical and Sanitary Departments of the Government of India—Oriental or Delhi Sore by Captain S P. James, M.B., I.M S, New series, No. 13. Super-Royal 4to Limp cover. 10s. or 1s (3a.)

Scientific Memoirs by Officers of the Medical and Sanitary Department of the Government of India—On a parasite found in the White Corpuscles of the blood of dogs by Captain S. P. James, M B, I M.S. New series No. 14 Super-Royal 4to. Limp cover 10s. or 1s. (3a.)

Scientific Memoirs by Officers of the Medical and Sanitary Departments of the Government of India—On a parasite found in persons suffering from Enlargement of the Spleen in India (Third Report), by Lt. S. R. Christophers, M.B., I.M.S., New series, No. 1. Super Royal. 4to. Limp cover. 10s. or 1s. (2a.)

Scientific Memoirs by Officers of the Medical and Sanitary Departments of the Government of India. The specificity of antivenomous Sera with special reference to a Serum prepared with the venom of Daboia Russelli by Captain George Lamb, M.D., I M S. New series, No. 16. Super-Royal 4to Limp cover. 6s. or 7d. (2a)

Imperial Library List of Additions, Third Series, with subject index, March 1905. No. 7, 8 and 9, Super-Royal 4to. Paper cover. 8a. or 9d. (2a) each.

The Private Diary of Ananda Ranga Pillai, Vol I, 1736 to 1746.—Dubash to Joseph Francois Dupleix, Knight of the Order of St. Michael, and Governor of Pondichery.—A record of Matters, Political, Historical, Social, and Personal, from 1736 to 1761. Translated from the Tamil by the order of the Government of Madras and Edited by Sir J. Frederick Price, K.C.S.I., late of the I.C.S., assisted by R. Rangachari, B.A. Rs. 3 or 4s 6d. (7a.)

Quarterly List of Officers in the Department of the Government of India, April to June 1905. Foolscap, paper cover. 4a. or 5d. (1a.)

Annual Report of the National Association for Supplying Female Medical Aid to the Women of India for the year 1904. (20th issue.) Royal 8vo. Limp cover. Re. 1 or 1s. 4d. (4a.)
Fauna of British India, Butterflies. Vol. I, by Colonel C. T. Bingham. Royal 8vo. cloth. Rs. 15 or 22s. 6d. (7a.)
Annual Report of the Director General of Archæology for the year 1903-04. Part I. Foolscap. Paper cover. 4a. or 5d. (1a.)

REVENUE AND AGRICULTURE DEPARTMENT.

Progress Report of Forest Administrations in the Andamans for 1903-04. Foolscap. Paper cover. 8a. or 9d. (2a.)
Progress Report of Forest Administration in Baluchistan for 1903-04. Foolscap. Paper cover 8a. or 9d. (2a.)
Technical Art Series for 1904. Nos. I to XIII with their explanatory text and cover. Rs. 3-4 (4a.) per set or 4a. per plate (1a.)
History of Services of the Officers of Engineer, Accounts and State Railway Revenue Establishments, corrected to 31st December 1904. Vols. I and II (complete). Royal 8vo. Board. Rs. 5 (9a.)

FOREIGN DEPARTMENT.

Report on the Political Administration of the territories within the Central India Agency for 1903-04. (Selection No. CCCCXVI.) Foolscap, board. Re. 1 or 1s. 6d. (2a.)
Report on the working of the Thagi and Dakaiti Department for 1903. (Selection No. CCICCI.) Foolscap, paper cover. 9a. or 11d. (1a.)
Administration Report on the Persian Gulf Political Residency and Maskat Political Agency for 1903-04. (Selection No. CCCCXI.) Foolscap, board. Re. 1 or 1s. 6d. (2a.)
Administration Report of the Baluchistan Agency for 1903-04. (Selection No. CCCCXVII. Foolscap. Board. Re. 1-12 or 2s. 8d. (3a.)
Report on the Political Administration of the Rajputana States and Ajmere-Merwara for 1903-1904 (Selection No. CCCCXVIII.) Foolscap, board. Rs. 2 or 3s. (6a.)
Report on Sanitation, Dispensaries and Jails in Rajputana for 1903 and on Vaccination for the year 1903-1904. (Selection No. CCCCXIV.) Foolscap, board. Re. 1 or 1s. 6d. (4a.)
Report on the working of the Dispensaries and Jail Hospitals and on Vaccination in the Central India Agency for 1903. (Selection No. CCCCXV.) Foolscap. Board. Rs. 1 12a or 2s. 8d. (3a.)

FINANCE DEPARTMENT.

Financial Statement for 1904-05 and 1905-06. Foolscap, board. Re. 1-3 or 2s. 3d. (6a.)

COMPTROLLER-GENERAL.

Appropriation Report on the Accounts of the Government of India for 1903-04 by A. F. Cox, Esq. Foolscap. Board. 8a. or 9d. (6a.)

STATISTICAL DEPARTMENT.

Sea-Borne Trade and Navigation Accounts of British India for the month of February 1905. No. 11 of 1904-05. Royal 8vo. Stitched. 8a. or 9d. (2a.)
Accounts of the External Land Trade of British India for the month of December 1904, No. 9 of 1904-05. Royal 8vo., stitched. 8a. or 9d. (2a.)
Statistics of cotton spinning and weaving in the Indian Mills in January 1905 and in the ten months, April 1904 to January 1905, compared with the corresponding period of 1902-03 and 1903-04. Royal 8vo., stitched. 2a. or 2d. (1a.)
Statistics of Cotton Spinning and Weaving in the Indian Mills in February 1905 and in the 11 months, April 1904 to February 1905, compared with the corresponding period of 1902-03 and 1903-04. Royal 8vo. Stitched. 2a. or 2s. (1a.)
Accounts relating to the Trade carried by rail and river in India in the quarter and in six months ending September 1904, compared with the corresponding periods of the years 1902 and 1903. No. 2 of 1904-05. Foolscap., paper cover. 8a. or 9d. (3a.)
Sea-Borne Trade and Navigation Accounts of British India for the month of March April 1905. No. 11. Royal 8vo. Stitched. 8a. or 9d. (2a.) each.
Accounts relating to the Sea-borne Trade and Navigation of British India for the calendar year 1904, compared with the years 1902 and 1903. 8a. or 9d. (1a.)

MILITARY DEPARTMENT.

The Quarterly Indian Army List for April 1905, New series, No. 4. Royal 8vo., paper cover Rs. 3 or 4s. 6d. (8a.)
India Military Budget Estimate for the year 1905-1906. Foolscap, board. Re. 1-8, or 2s. 3d. (8a.)
The Indian Appendix to the Signalling Regulations, 1904. Royal 16mo. Cloth. As. 8 or 9d. (1a.)

RAILWAY BOARD.

Report (dated 30th December 1903) on the Organisation and Working of Railways in America by Neville Priestley, Esq. Foolscap. Paper cover. Rs. 3 or 4s. 6d. (3a.)

List of Books published from October 1904 to March 1905.

LEGISLATIVE DEPARTMENT.

The Indian Registration Act, 1877 (III of 1877), as modified up to 1st April, 1900, with footnotes brought down to 1st November, 1902. 11a. (2a.)
The Indian Emigration Act, 1883 (XXI of 1883), as modified up to 1st December, 1902. 11a.
Act XXX of 1852. An Act for the Naturalization of Aliens, as modified up to 1st December, 1902. 2a. (1a.)
Act V of 1861. The Police Act, 1861. As modified up to 7th March, 1906. 7a. 6p. (1a.)
Act X of 1873. The Indian Oaths Act. As modified up to 1st February, 1903. 3a. 9p. (1a.)
Act XIX of 1883. The Land Improvement Loan Act, 1883. As modified up to 1st February, 1903. 2a. 6p. (1a.)
Act XII of 1884. The Agriculturists' Loans Act, 1884. As modified up to the 15th December, 1896, and with footnotes brought down to the 1st February, 1903. 2a. (1a.)
Act IX of 1890. The Indian Railways Act, 1890. As modified up to 1st May, 1896, with footnotes brought down to 1st January, 1903. 15a. (3a.)
Act XXXIV of 1850. The State Prisoners Act, 1850. As modified up to 30th April, 1903. 2a. 6p. (1a.)
Act XXXIV of 1858. The Lunacy (Supreme Courts) Act, 1858. As modified up to 30th April, 1903. 4a. 3p. (1a.)
Act XXXV of 1858. The Lunacy (District Courts) Act, 1858. As modified up to 30th April, 1903. 2a. 3p. (1a.)
Act V of 1873. The Government Savings Banks Act, 1873. As modified up to 1st April, 1903. 3a. 6p. (1a.)
Act II of 1886. The Indian Income Tax Act 1886. As modified up to 1st April, 1903. 8a. (1a. 6p.)
Act I of 1878. The Opium Act, 1878. As modified up to 1st December, 1896, with footnotes brought down to 1st March, 1903. 5a. 6p. (1a.)
Act III of 1865. The Carriers Act, 1865. As modified up to 31st May, 1903. 3a. (1a.)
Act IX of 1897. Amending the law relating to Government and other Provident Funds. As modified up to 1st May, 1896, with footnotes brought down to 1st January, 1903. 1a. 6p. (1a.)
Act No. XII of 1855 (Legal Representatives' Suits), as modified up to 1st November, 1904. 1a. 6p. (1a.)
Act No. IX of 1860 [Employers and Workmen (Disputes)], as modified up to 1st December, 1904. 1a. 6p. (1a.)

Act No XXI of 1860 (Societies Registration), as modified up to 1st December, 1904. 2s. 9p. (1s.)

The Punjab Laws Act, 1872 (IV of 1872), as modified up to 1st November, 1904. 7s. 1s. (1s.)

The Indian Christian Marriage Act, 1872 (XV of 1872), as modified up to 1st December, 1904. 10s. (1s.)

Act No. X of 1891 (Indian Penal Code Amendment), as modified up to 1st December 1904 1s. (1s.)

The Indian Petroleum Act, 1899 (VIII of 1899), as modified up to the 1st December 1904 7s. (1s.)

The Indian Extradition Act, 1903 (XV of 1903), as modified up to 1st December, 1904. 5s. 6p. (1s.)

Act V of 1869 The Indian Articles of War, as modified up to 1st December 1904. Royal 8vo. Stitched. Re. 1 2s. (3s.)

Act XV of 1881. The Indian Factories Act, 1881, as modified up to the 1st December 1904. Royal 8vo. Stitched. 5s 6p. (1s 6p.)

Act V of 1883. The Indian Merchant Shipping Act, 1883, as modified up to the 1st December, 1904. Royal 8vo. Stitched. 6s (1s.)

The Central Provinces Code, 3rd Edition, 1905. Cloth. Super-Royal 8vo. Re. 4 or 6s. (6s.)

The Bengal Code, Volume I, 3rd Edition, 1905 (Now ready). Cloth. Super-Royal. Price all 5 Volumes Rs. 30 or 45s. Vol. I. Rs. 6 or 9s. (8s.)

The Public Gambling Act, 1867 (III of 1867), as modified up to the 1st January, 1905. As. 4 or 5d. (1s.)

The Indian Contract Act, 1872 (Act IX of 1872), as modified up to the 30th June, 1901. Royal 8vo. Stitched. Re. 1-4s. (2s.)

HOME DEPARTMENT.

Scientific Memoirs by Officers of the Medical and Sanitary Departments of the Government of India. On a parasite found in persons suffering from enlargement of the spleen in India, by Lieut. S. R. Christophers, M.B., I.M.S, New series, No. 11. Super-Royal 4to. Limp cover. Rs. 2 or 3s. (3s.)

Report on the Administration of Criminal Justice in Lower Provinces of Bengal during the year 1903. Foolscap. Paper cover Re. 1. or 1s. 6d. (2s.)

Imperial Library List of Additions, September to December 1904, Nos. 1—6. Foolscap. Paper cover. As. 8 or 9d. (2s.) each.

Report on the Administration of Civil Justice in the Lower Provinces of Bengal during the year 1903. Foolscap. Paper cover. Re. 1 or 1s. 6d. (2s.)

Scientific Memoirs by Officers of the Medical and Sanitary Departments of the Government of India on the Morphology, Teratology and Declinism of the Flowers of Cannabis By Major D. Prain, M.B., I.M.S. New series. No. 12. Super-Royal 4to. Limp cover. 14s. 1s. 4d. (3s.)

Quarterly List of Officers in the Departments of the Government of India, October to December 1904, January to March 1905. Foolscap, Paper cover As. 4 or 5d (1s.)

Annual Report of the Sanitary Commissioner with the Government of India, 1903, with Appendices and Returns of sickness and Mortality among European Troops, Native Troops and Prisoners in India for the year. Foolscap. Board. Rs. 3 or 4s. 6d. (8s.)

Report of the Indian Police Commission, 1902-03. Foolscap. Board. With appendices Re. 1-8s. (7s.); without appendices, Re. 1-8s. (7s.)

DEPARTMENT OF REVENUE AND AGRICULTURE.

Report of the Chief Inspector of Mines in India for the year ending 31st December 1903. Foolscap. Board. As. 12 or 1s. 2d. (2s.)

Review of Forest Administration in British India for the year 1902-03. Foolscap. Paper cover. Re. 1-11 or 2s. 6d. (3s.)

Annual Administration Report of the Civil Veterinary Department in India for the official year 1903-04. Foolscap. Paper cover. 12s. or 1s. (2s.)

Records of the Botanical Survey of India, Vol. IV. No. I (An Epitome of the British Indian Species of impatients by Sir J. D. Hooker, G.C.S.I., C.B., F.R.S. Part I. Royal 8vo. Paper cover. 3s or 4d. (1s.)

Records of the Botanical Survey of India, Vol III, No. 2. The vegetation of the districts of Hughli, Howrah and the 24-Parganas, by D. Prain, Esq. Re. 1-12, or 2s. 8d. (3s.)

Rules framed under section 20 of the Indian Mines Act, 1901 (VIII of 1901) prescribing the Compulsory submission of Annual returns of output and labour or Indian Mines. Foolscap 0-0-6. (1s.)

Rules for the Lease or Sale of Waste Lands in India. 1904 edition. Foolscap. Board. Re. 4 or 6s. (8s.)

Archæological Survey of India. Annual Report, 1902-03. Super-Royal. Cloth. Rs. 20 or £1 10s. (Re. 1 2s.)

Annual Report of the Board of Scientific Advice for India for the year 1903-04. Foolscap. Paper cover. 6s. or 7d. (2s.)

List of Officers in the Department of Revenue and Agriculture, Government of India, and the Departments subordinate to it, corrected to 1st January 1905. As. 8 or 8d. (2s.)

FOREIGN DEPARTMENT.

Report on the Political Administration of the Territories within the Central India Agency for 1902-03. Foolscap Board. Re. 1 or 1s 6d. (3s.)

Report on the Administration of the Civil and Military Station of Bangalore for the year 1902-03. 8s or 9d. (2s.)

Report on the Administration of Berar for the year 1902-03. Foolscap. Board. Rs. 2 or 3s. (2s.)

Report on the Administration of the Civil and Military Station of Bangalore for the year 1903-04. Foolscap. Limp cover. 8s. or 9d. (2s.)

FINANCE DEPARTMENT.

Report on the Administration of the Mint at Bombay and Calcutta for the year 1903-04. Foolscap. Paper cover. Re. 1 or 1s. 6d (2s.)

Statistics Compiled from the Finance and Revenue Accounts of the Government of India. Receipts and Disbursemets of Home and Indian Accounts from 1st April 1895 to 31st March 1903. Foolscap. Board. Rs. 2 or 3s. (9s.)

List of Officers in the Finance and Commerce Department, corrected to 1st October, December 1904, January and February 1905. Royal 8vo. Paper cover. 4s. or 5d. (1s.)

COMPTROLLER-GENERAL.

Finance and Revenue Accounts of the Government of India for the year 1903-04. Foolscap. Board. Rs. 2. or 3s. (8s.)

STATISTICAL DEPARTMENT.

Statistics of Cotton Spinning and Weaving in the Indian Mills in June 1904 and in the three months, April to June 1904, compared with the corresponding period of 1902 and 1903. No. 5 of 1904-05. Royal 8vo. Stitched. 2s. or 2d. (1s.) each.

Trade and Navigation Accounts of British India for the months of August, September and October 1904. Nos. 5, 6 and 7 of 1904-05. Royal 8vo. Stitched. 8s. or 9d. (2s.) each.

Accounts of the External Land Trade of British India for the months of June, July and August 1904, Nos. 3, 4 and 5 of 1904-05. Royal 8vo. Stitched. 8s. or 9d. (2s.) each.

Statistics of Cotton Spinning and Weaving in the Indian Mills in July, August, September, October, November, December 1904. Royal 8vo. Stitched. 2s. or 2d. (1s.) each.

Judicial and Administrative Statistics of British India for 1902-03 and preceding years. 8th issue. Foolscap. Board. Rs. 2 or 3s. (10s.)

Accounts of the French Possessions in India in the year ending 31st March 1904 and the four preceding years. Foolscap. Paper cover. 2s. or 2d. (1s.)

Accounts of the Trade of Aden in the year ending 31st March 1904 and the four preceding years. Foolscap. Paper cover. 10s. (1s.)

Area and yield of certain principal crops in India. Sixth issue. Foolscap. Paper cover. 3s. or 6d. (2s.)

Sea-Borne Trade and Navigation Accounts of British India for the months of November, December 1904, January 1905. Nos 8, 9 and 10 of 1904-05. Royal 8vo. Stitched. 8s. or 9d. (2s.)

Accounts of the External Land Trade of British India for the month of September, October 1904. Nos. 6, 7 and 8 of 1904-05. Royal 8vo. Stitched. 8a. or 9d. (2a.)

Agricultural Statistics of India for the years 1898-99 to 1902-03 in two Volumes. Foolscap. Board. Both Volumes. Rs. 3-8a. or 5s. 3d. (12a.)

Accounts relating to the trade carried by Rail and River in India in the quarter ending June 1904, compared with the corresponding period of the years 1902 and 1903. No 1 of 1904-05. Foolscap. Paper cover. 8a. or 9d. (3a.)

Financial and Commercial Statistics of British India, II issue, 1904. Super-Royal, Paper cover Rs. 4 or 6s. (12a.)

Tariff Shcedules, 1905. Royal 8vo. Stitched. 6a. or 7d. (1a.)

Annual Statement of the Coasting Trade and Navigation of British India in the year ending 31st March 1904. Super-Royal. Board. Rs. 2 or 3s. (7a.)

ACCOUNTANT-GENERAL.

History of Services of Gazetted and other Officers serving under the Government of Bengal, corrected to 1st July 1904. In two parts. Royal 8vo. Board. Rs. 5 or 7s. 6d. (12a.)

MILITARY DEPARTMENT.

Return of Wreck and Casualties in Indian Waters, 1902-03. Foolscap. Board. Re. 1 or 1s. 6d. (3a).

Class Hand Books for the Indian Army—Mappillas or Moplahs, by Major P. Holland Pryor. Royal 8vo. Board. Re. 1-4 or 1s. 11d. (5a.)

Hand Book for the Indian Army—Jats, Gujars, and Ahirs, by Major A. H. Bingley. Royal 8vo. Board. Re. 1 or 1s. 6d. (5a.)

Classified List and Distribution Return of the Establishment of the Military Works Services corrected up to 31st December 1904. Royal 8vo. Paper cover. 4a. or 5d. (1a.)

RAILWAY BOARD

Administration Report of the Telegraph Department for 1903-04. Foolscap. Paper cover, 8a. or 9d. (2a.)

Public Works Department Classified List of the Subordinate Establishment, corrected to 30th June 1904. Royal 8vo. Paper cover. 4a. or 5d. (1a.)

Public Works Department Classified List and Distribution of Establishment corrected up to 31st December 1904. Super-Royal 8vo. Paper cover. Rs. 2 or 3s. (4a.)

Selections from the Records of the Government of India in the Public Works Department, No. CCXXXVIII.—Relative Merits of Broad and Metre Gauge Lines of Railway. Foolscap. Board. 4a. or 5d. (1a. 6p.)

Classified List of the Subordinate Establishment corrected up to 31st December 1904. Royal 8vo. Paper. 4a. or 5d. (1a.)

List of new books for sale at Thomason College, Roorkee which were not advertised before.

Roorkee Treatise on "Railways," 4th Edition, revised by F. Wolly Dod, F.C.H. Price, Rs. 3 per copy.

Roorkee Treatise on "Irrigation Work." By Lieutenant-Colonel J. Clibborn, I.S.C., B.A., L.C.E., C.I.E. Price, Rs. 9 per copy.

Roorkee Treatise on "Sanitary Engineering." Compiled by Lieutenant-Colonel J. Clibborn, I.S.C., B.A., L.C.E., C.I.E. Price, Rs. 4-8 per copy.

Roorkee Manual of "Applied Mechanics," Volume II. The stability of structures mostly by graphic methods, by Lieutenant-Colonel J. H. C. Harrison, R.E. Price, Rs. 8-2 per copy.

Roorkee Manual of Hydraulics Price per copy, Re. 1-4. (No. XIX, Elementary Treatise.) By E. F. Tipple, Esq., B.A.

Designs for Wooden Bridges, together with rules for calculating the area of waterway, etc., and Plates. By late Rai Bahadur Kunhya Lal. Price per set, Rs. 4-2

Pamphlet on Examination for Acid Radicals: Tables giving Analysis of Acids. Price per copy, 8a

Pamphlet on Examination for Acid Bases: Tables giving Analysis of Metallic Bases. Price, 8a. per copy.

List of New Books available for sale in the College Book Depôt.

Roorkee Treatise on Civil Engineering, Section XIII. Drawing for Engineer students, Part I. By Major E. H. deV. Atkinson, R.E., Principal, Thomason College, Roorkee. Price per copy Rs. 3-2, including packing, postage, etc.

Hand Book of the Thomason Engineering College, Roorkee, Illustrated. Price Re. 0-12 per copy. including packing, postage, etc.

A list of new books and periodicals for sale at the Library of the Asiatic Society of Bengal, 57 Park Street, Calcutta.

SOCIETY'S PUBLICATIONS.

Proceedings Nos. 9 and 10, at 8a.

BIBLIOTHECA INDICA.

Jnaturvarga Chintamani. Vol. IV, Fasc. 3, at 6a.
Catasahasrika Prajnaparamita. Vol. II, Fasc. 9, at 6a.
Mahabhasyaprodipoddyota. Vol. III, Fasc. 1, at 6a.
Suddhi Kaumudi. Fasc. 3, at 6a.
Vidhana Parijata. Vol I, Fasc. 7, at 6a.

List of books published by the Meteorological Department from 1st October 1904 to 31st March 1905.

Monthly Weather Review, April to September 1904. (Illustrated by 6 plates.) Quarto. Paper cover. Re. 1 per month.
Indian Meteorological Memoirs, Vol. XVI. Part II. By Sir John Eliot. Quarto. Paper cover. Rs. 3.

List of Books published by the Meteorological Department during the current quarter.

Monthly Weather Review, October 1904. (Illustrated by 6 plates.) Quarto. Paper cover. Re. 1.
Indian Meteorological Memoirs, Vol. XVI, Part II. By Sir John Eliot. Quarto. Paper cover. Rs. 3.
Annual Summary of the Monthly Weather Review, 1903. (Illustrated by 6 plates.) Quarto. Paper cover. Rs. 3.
Monthly Weather Review, November 1904. (Illustrated by 6 plates.) Quarto. Paper cover. Re. 1.
Monthly Weather Review for December 1905. (Illustrated by 6 plates.) Quarto. Paper cover. Re. 1.

List of new books published by the Geological Survey of India during the week ending 22nd April 1905.

Records of the Geological Survey of India, Vol. XXXII, Part II. Re. 1.
Memoirs of the Geological Survey of India Palæontologia Indica. New Series. Vol. II. Memoir No. 2. Re. 1.

APPENDIX TO

The Calcutta Gazette.

WEDNESDAY, JUNE 28, 1905.

NOTICES TO MARINERS.

THE following Notices are published for general information.

W. A. INGLIS,
Secretary, Marine Department.

CALCUTTA, *the 24th June 1905.*

CHINA SEA—GREAT NATUNA ISLAND.

Further information regarding the shoal on the north-west.

No. 215 (first publication).—With reference to Notice to Mariners No. 376, dated 21st November 1903, issued by this office, the British Admiralty has given further notice (No. 425 of 1905) that the 7-fathom coral bank lying north-westward of Great Natuna island is situated with Butonn islet bearing S. 2° W., distant 10¾ miles, and cape Ju, the south point of Panjang island, S. 88° E., and not in the position given in the above-mentioned notice.

This shoal is about 8 cables in extent, and has a least depth of 4 fathoms over it.

Approximate position, lat. 4° 18′ N., long. 107° 59¾′ E.

(Variation 2° Easterly in 1905.)

This Notice affects the following Admiralty Charts:—China Sea, southern portion, No. 2660a; Natuna islands, No. 1348: Also, China Sea Directory, vol. II, 1899, page 86.

EASTERN ARCHIPELAGO—TIMOR ISLAND, SOUTH-WEST COAST.

Semao (Semau) strait—Reef reported.

No. 216 (first publication).—The British Admiralty has given notice (No. 427 of 1905) that a reef, with a depth of 2 fathoms over it, exists near the eastern shore of Semao (Semau) strait, in a position from which tanjong Lolindo bears S. 56° W., distant 1$\frac{5}{10}$ miles, and tanjong Hansisi N. 24° W.

Approximate position on Chart No. 3296, lat. 10° 12½′ S., long. 123° 31′ E.

(Variation 2° Easterly in 1905.)

This Notice affects the following Admiralty Chart:—Koepang bay, No. 3296: Also Eastern Archipelago, part II, 1904, page 242.

CHINA SEA—RHIO STRAIT.

Terkolei island—Alteration in character of light.

No. 217 (first publication).—The British Admiralty has given notice No. (428 of 1905) that the character of the light on Terkolei Island, Rhio strait, was, on March 28th, 1905, changed from a white fixed to a *white flashing* light showing flashes in *quick succession*.

Approximate position, lat. 0° 57¼′ N., long. 104° 20½′ E.

This Notice affects the following Admiralty Charts:—China Sea, Banka strait to Singapore, No. 2757, Singapore strait, No. 2403; Rhio strait, No. 2413: Also, List of Lights, part VI, 1905, No. 539; and China Sea Directory, vol. I, 1899, page 532.

EASTERN ARCHIPELAGO—SUMATRA, WEST COAST—SAMBAT BAY.

Tanjong Bandar (Bundar)—Character of intended light.

No. 218 (first publication).—With reference to Notice to Mariners No. 178, dated 1st June 1905, issued by this office, the British Admiralty has given further notice (No. 430 of 1905) that the light to be established on tanjong Bandar, Sambat Bay, will not be a white group occulting light, as stated in the above notice, but will be a *white group flashing* light, showing groups of *three flashes every thirty seconds*, thus:—flash, *three seconds*; eclipse, *three seconds*; flash, *three seconds*; eclipse, *three seconds*; flash, *three seconds*; eclipse, *fifteen seconds*.

The other details given are correct.

Further notice will be given when this light has been established.

Approximate position, lat. 4° 49′ S., long. 103° 20′ E.

This Notice affects the following Admiralty Charts:—Eastern Archipelago, No. 941a; China sea, No. 1263; Tyingkok islands to Sunda strait, No. 2761, plan of Sambat bay on Chart No. 866; Also, List of Lights, Part VI., 1905, page 75; and China Sea Directory, vol. I, 1896, page 314.

AUSTRALIA, SOUTH—SPENCER GULF.

Middle bank—Wreck to the south-west.

No. 219 (first publication).—The British Admiralty has given notice (No. 432 of 1905), that the wreck of the ketch *Britannia*, a mast of which is said to be visible above water, lies sunk in a position about 20 miles S.W. from the Middle bank light light-vessel.

Approximate position, lat. 33° 51′ S., long. 137° 14′ E.

(*Variation 5° Easterly in 1905.*)

This Notice temporarily affects the following Admiralty Chart:—St. Vincent and Spencer gulfs, No. 2389b: Also, Australia Directory, vol. I, 1897, page 247.

CHINA, SOUTH-EAST COAST—CAPE OF GOOD HOPE.

Wreck to the south-eastward no longer dangerous.

No. 220 (first publication).—With reference to Notice to Mariners No. 113, dated 4th April, issued by this office, the British Admiralty has given further notice (No. 438 of 1905) that the masts and funnel of the wreck of the S.S. *Workfield*, which sank at a distance of about seven miles south-eastward from the Cape of Good Hope, have been removed, and that there is now a depth of nine fathoms over the position. This wreck has therefore been erased from the charts.

Approximate position, lat. 23° 7′ N., long. 116° 51′ E.

This Notice affects the following Admiralty Charts:—Formosa island, &c., No. 1968; Hong-Kong to the Brothers, No. 1962; Also, China Sea Directory, vol. III, 1904, page 147.

CHINA SEA—FORMOSA (TAIWAN).

Pescadores islands—Submerged artificial dangers abroad.

No. 221 (first publication).—The British Admiralty has given notice (No. 439 of 1905) that dangerous artificial objects having been submerged in the sea around the Pescadores islands, mariners are warned not to approach these islands within a distance of six miles. Outside this limit vessels will be clear of these dangers.

Approximate position of Makung, lat. 23° 31′ N., long. 119° 31′ E.

This Notice affects the following Admiralty Charts:—Pescadores islands, Nos. 1961 and 1338, Also, China Sea Directory, vol. III, 1904, page 208.

CHINA—LIAU TUNG GULF—LIAU RIVER APPROACH.

Newchwang—Signals prohibiting entry.

No. 222 (first publication).—The British Admiralty has given notice (No. 440 of 1905) that a flagstaff would be erected in the fort at Newchwang, from which signals would be made by means of the International Code to prohibit vessels entering the port until they have received permission to do so. Vessels crossing the bar without permission will be ordered by signal to return and wait outside until the port is declared open.

Approximate position, Newchwang fort, lat. 40° 42¼′ N., long. 122° 11¼′ E.

This Notice affects the following Admiralty Chart:—Liau river, No. 2894; Also, China Sea Directory, vol. III, 1904, pages 643, 644.

BAY OF BENGAL—CHITTAGONG COAST.

South Patches—Buoy disappeared.

No. 223 (first publication).—A telegraphic communication has been received from the Port Officer, Akyab, stating that the Master of the S.S. *Goa* reports that South Patches Buoy has disappeared.

INDIA, WEST—BOMBAY COAST.

Caution—Cape Ramas—Submerged wreck S.-W. of the light-house.

No. 224 (first publication).—The Bombay Government has given notice (No. 51 of 1905) that the Master of S.S. *Obra* reports that on the 3rd June 1905 he passed some wreckage which appeared to be a hull of a submerged vessel over 50 feet in length in lat. 15° 1′ N., long. 73° 48′ E., about 7 miles distant from Cape Ramas Light-house. Mariners are hereby warned.

This Notice affects the following Admiralty Charts:—Achra River to Cape Ramas, No. 740; Visiadrug to Cochin, No. 2737; Karachi to Vengurla, No. 826; Vengurla to Cape Comorin, No. 827; and West Coast of Hindustan Pilot, Fourth Edition, 1898, page 158.

INDIA, WEST—BOMBAY COAST.

Dates of removal of certain buoys between Alibág and Bhatkal for the south-west monsoon.

No. 225 (first publication).—With reference to Notice to Mariners No. 187, dated the 1st June 1905, issued by this office, the Bombay Government has given further notice (No. 56 of 1905) that the undermentioned buoys were removed from their positions on the dates noted against each:—

Alibág buoy ...	...	...	...	16th May 1905.
Ambulgad Reef buoy, Jaitápur		...	...	17th " "
Chaldia Rock buoy	...	...	...	16th " "
Málvan ditto	...	...	...	17th " "
Johnstone Castle buoy	...	...	...	18th " "
Vengurla Harbour buoys	...	...	...	18th " "
Málvan ditto	...	...	...	19th " "
Bhatkal buoy ...	...	...	...	19th " "

INDIA, WEST—SIND COAST.

Karachi harbour—Red light at extreme end of Manora Point Breakwater replaced by green light.

No. 226 (first publication).—The Bombay Government has given notice (No. 57 of 1905) that on and after the 1st December 1905 the red light at present exhibited at the extreme end of the Manora Point Breakwater will be replaced by a green light in order that it may be more easily discernible.

This Notice affects the following Admiralty Charts:—Karachi Harbour, No. 40; Coasts of Sind and Kutch, No. 42; Cape Monze to Kediwari Mouth, No. 41; also West Coast of Hindustan Pilot, 1898, page 303; and List of Lights, Part VI, 1905, page 29, No. 201.

AUSTRALIA—KANGAROO ISLAND—NEPEAN BAY.

Kingscote approach—Colour of light shown on the Channel.

No. 227 (first publication).—The President of the Marine Board, Port Adelaide, has given notice (No. 10 of 1905) that on and after April 25th, 1905, the light on the end of Kingscote Jetty will show Red over the Shoal north of the Channel, and White to the south of the Shoal and through the Channel.

This affects Admiralty Chart No. 2389A.

AUSTRALIA—GULF OF ST. VINCENT.

Port Adelaide river entrance—New outer lead.

No. 228 (first publication).—With reference to notice to Mariners No. 278, dated 9th August 1904, issued by this office, the President of the Marine Board, Port Adelaide, has given further notice, informing Masters of vessels and others that on and after June 1st, 1905, Leads will be placed to show over the Outer Cutting.

The Leads will consist of one beacon on the Revetment Wall, in the position of the old No. 1 beacon, and another 1,700 feet farther back in a N.E. by E and S.W. by W. direction. By night the near beacon will show two red lights placed in a vertical position four (4) feet apart, and the far one two white lights similarly placed four (4) feet apart.

Directions to enter the river.

Bring the beacons or lights in line, proceed on that line until the two red lights of No. 1 Lead are on with each other, then proceed according to previous sailing directions.

This affects Admiralty Charts 2389B, 1750, and 1752.

AUSTRALIA—GULF OF ST. VINCENT.

Port Willunga—Red Perch buoy removed.

No. 229 (first publication).—The President of the Marine Board, Port Adelaide, has given notice (No 13 of 1904), informing Masters of vessels and others that the Red Perch buoy, which previously marked the Reef off Snapper Point, near Port Willunga, has been removed.

This notice affects Admiralty Chart No. 2389A.

AUSTRALIA—ENCOUNTER BAY.

Port Victor—Black Buoy removed.

No. 230 (first publication).—The President of the Marine Board, Port Adelaide, has given notice (No. 14 of 1905) that the Black Buoy which hitherto marked the Outer Moorings at Port Vic or in eight (8) fathoms has been removed, leaving only one mooring buoy and two hauling-off buoys abreast of the jetty.

This notice affects Admiralty Chart No. 2493.

AUSTRALIA—GULF ST. VINCENT.

Port Adelaide river and approaches—Beacons placed to mark the channels.

No 231 (first publication).—The President of the Marine Board, Port Adelaide, has given notice (No. 16 of 1905) that a Pile Beacon, painted black with diamond top, has been placed in the Boat Channel close to the south end of the seawall or reef as a guide to small vessels using this channel; also that one (1) red and five (5) black beacons have been placed to mark the channels on the north-east side of Torrens island. It is to be distinctly understood that the Marine Board does not recommend the use of these channels except for vessels of very shallow draught.

This affects Admiralty Chart No. 1752.

ARABIA, NORTH-EAST COAST—PERSIAN GULF.

Caution—Position of a large overturned native boat.

No. 204 (second publication).—His Britannic Majesty's Vice-Consul at Bushire reports that information has been received from the Commander of the R.M.S. *Goalpara* that at 6 30 A.M. on the 28th May 1905, when about 8 miles N. N. W. of Ras Rakkim, approximate position lat 26° 18′ N., long 50° 21′ E., he passed a large native boat bottom up Mariners are hereby warned.

KOREAN ARCHIPELAGO—QUELPART ISLAND.

A shoal patch to the southward.

No. 205 (second publication).—The British Admiralty has given notice (No. 402 of 1905) that a shoal patch of sand and coral, having over it a depth of 5¼ fathoms, has been found off the south coast of Quelpart island, in a position from which the north point of Mahon island bears N. E. ¾ N., distant 1¼ miles, and the north point of Burnet island N. W. ¾ W.

Approximate position, lat. 33° 12¼′ N., long. 126° 34¾′ E.

(Variation 4° Westerly in 1905.)

This Notice affects the following Admiralty Chart:—Korean Archipelago, southern portion, No. 104: Also, Sailing Directions for Japan, &c. 1904, page 89.

AFRICA, EAST COAST—DELAGOA BAY.

Cutfield flats—Wreck to the eastward.

No. 206 (second publication).—The British Admiralty has given notice (No. 403 of 1905) that the wreck of the barque *Magwen*, a mast of which shows above high water, lies sunk in a position about three miles to the eastward of the central part of Cutfield flats, with the beacon on Cutfield hummock bearing N. 19° W., distant about ten miles.

Approximate position, lat. 25° 41′ S., long. 32° 58′ E.

(*Variation 20° Westerly in 1905.*)

This Notice affects the following Admiralty Charts:—Delagoa Bay to river Zambesi, No. 648; Tugela river to Delagoa bay, No. 2089; Delagoa bay, No. 644: Also, Africa Pilot, part III, 1897, page 191.

JAPAN—NIPON ISLAND, EAST COAST.

Katsuura wan—Rock reported in approach.

No. 207 (second publication).—The British Admiralty has given notice (No. 408 of 1905) that the Master of the British steamship *Khalif* reports having struck on an uncharted rock, situated with Hachiman zaki, the eastern point of Katsuura wan, bearing N. 32° E, distant 2½ miles.

The vessel was drawing 18½ feet at the time; this danger has, therefore, been placed on the Charts as a rock with three fathoms over it. Its situation must be considered doubtful, and it is probable that it is somewhat closer inshore where the soundings are shown to be very irregular on this line of bearing on the plan of Katsuura wan, No. 3163.

Approximate position, lat. 35° 5¾′ N., long. 140° 17¼′ E.

(*Variation 4° Westerly in 1905.*)

This Notice affects the following Admiralty Chart:—Tokyo to Sendai bay, No. 3334: Also, Sailing Directions for Japan, &c., 1904, page 387.

JAPAN—NIPON ISLAND, NORTH-WEST COAST.

Noto peninsula—Light established at Fukura.

No. 208 (second publication).—The British Admiralty has given notice (No. 411 of 1905) that on the 18th March 1905, a *white fixed* light, elevated 66 feet above high water and visible in clear weather from a distance of 5 miles between the bearings of N. 28° E., through east, and S. 26° E. would be established on the south side of the entrance to Fukura.

The light-house is a square wooden building, 16 feet in height, painted white.

Approximate position, lat. 37° 4¾′ N., long. 136° 43′ E.

(*Variation 5° Westerly in 1905.*)

This Notice affects the following Admiralty Chart:—Noto peninsula, No. 2243: Also, List of Lights, part VI, 1905, page 187; and Sailing Directions for Japan, &c., 1904, page 656.

JAPAN SEA—KOREA, EAST COAST.

Gensan bay—Wreck.

No. 209 (second publication).—The British Admiralty has given notice (No. 412 of 1905) that the wreck of the S.S. *Goyō maru*, showing a spar about 3 feet above high water, lies sunk in the western part of the Gensan bay, in a position from which the outer end of the wharf at the Japanese settlement bears S. 5° W., distant 4 1/10 cables, and the summit of Chotoku to S. 51° E.

Approximate position, lat. 39° 11¼′ N., long. 127° 25½′ E.

(*Variation 5° Westerly in 1905.*)

This Notice temporarily affects the following Admiralty Chart:—Port Lazaref and Yung Hing bay, No. 3037: Also, Sailing Directions for Japan, &c., 1904, page 136.

NEW ZEALAND.—North island—Great Barrier island.

Port Abercrombie—Rock west of Sugar Loaf island.

No. 210 (second publication).—The British Admiralty has given no tice (No. 414 of 1905) that a rock, with a depth of about 2 fathoms over it, exists in the entrance to port Abercrombie, in a position from which Sugar Loaf island bears E. by N ½ N., distant about 2½ cables and the west extreme of Peter island S.E.

Approximate position, lat. 36° 9¾′ S., long. 175° 18¾′ E.

(Variation 14° Easterly in 1905.)

This Notice affects the following Admiralty Chart:—Great Barrier island, ports and anchorages, No. 2559: Also, New Zealand Pilot, 1901, page 118.

EASTERN ARCHIPELAGO.—Borneo, west coast.

Palo river entrance—Buoys withdrawn.

No. 211 (second publication).—With reference to notice to Mariners No. 16, dated the 16th January 1904, issued by this office, the British Admiralty has given notice (No. 415 of 1905) that the two white conical buoys and the two black can buoys marking the fairway into Palo river have been withdrawn and will not be replaced.

Approximate position, lat. 1° 48′ N., long. 109° 14′ E.

This Notice affects the following Admiralty Chart:—South Natuna islands, No. 2104: Also, China Sea Directory, vol. II, 1899, page 44; and Supplement, 1901, page 4.

CHINA, SOUTH-EAST COAST—Breaker point.

Masts of a certain wreck no longer visible—Buoy removed.

No. 212 (second publication).—With reference to Notice to Mariners No. 371, dated 14th November 1903, issued by this Office, the British Admiralty has given further notice (No. 420 of 1905) that the masts of the wreck, which lies sunk in a position from which Breaker point bears N. 82° W., distance 15 miles, are no longer visible, but that the wreck is doubtless still a danger to navigation.

Also, that the buoy, temporarily placed to mark the position of the wreck, no longer exists.

Approximate position, lat. 22° 54′ N., long. 116° 45½′ E.

(Variation Nil in 1905.)

This Notice affects the following Admiralty Charts:—China sea, northern portion, No. 2661b; Hong-Kong to gulf of Liau-tung, No. 1262; Formosa island and strait, No. 1968; Hong-Kong to the Brothers, No. 1962: Also, China Sea Directory, vol. III, 1904, page 145.

AUSTRALIA—Torres strait—New Guinea (south-west coast).

Merauke—Light established.

No. 213 (second publication).—The British Admiralty has given notice (No. 423 of 1905) that a *white group occulting* light *every thirty seconds*, thus:—light, *fifteen seconds*; eclipse, *three seconds*; light, *three seconds*; eclipse, *three seconds*; light, *three seconds*; eclipse, *three seconds*, has been established at Merauke, south-west coast of New Guinea.

The light is of the 4th order. It is shown, at an elevation of 75 feet above high water, from a white framework structure, 65 feet in height, and is visible in clear weather from a distance of 13 miles between the bearings of N. 35° W., through north and east, and S. 53° E.

Approximate position, lat. 8° 28½′ S., long. 140° 21¾′ E.

(Variation 3° Easterly in 1905.)

This Notice affects the following Admiralty Chart:—Western approaches to Torres straits, No. 447: Also, List of Lights, part VI, 1905, page 255; Australia Directory, vol. II, 1898, page 551; and Australia Directory, vol. III, 1895, page 51.

EASTERN ARCHIPELAGO—Sutra, mawest coast.

Pasir islets—Shoals to the northward.

No. 214 (second publication).—The British Admiralty has given notice (No. 424 of 1905) that a small rock, with a depth of 11 feet over it, has been found to the northward of the Pasir islets, in a position from which on Admiralty Chart No. 2760 the east extreme

of Pasir Besar islet bears south, distant 4 cables, and the south extreme of tanjong Selung N. 55° W.

The undermentioned shoals appear on the latest edition of the Netherlands Government Chart of this locality, in the positions on Admiralty Chart No. 2760, as follows:—

a. A shoal, with a depth of 4 feet over it, situated 3½ cables North from the western extreme of Pasir Kechil islet, in the position of the 1¼ fathom shoal now shown on the Chart.

b. A shoal, with a depth of 2¾ fathoms over it, situated 3¾ cables N. 28° W. from the western extreme of Pasir Kechil islet and N. 67° E. from the eastern extreme of Pasir Besar islet.

Approximate position of Pasir Besar islet, lat. 4° 37′ N., long. 95° 34′ E.

(*Variation 1° Easterly in 1905.*)

This Notice affects the following Admiralty Chart:—Plan of Rigas bay on Chart No. 2760: Also, China Sea Directory, vol. I, 1896, page 262.

AUSTRALIA.

Regulations regarding Target practice.

No. 189 (third publication).—The British Admiralty has given notice (No. 372 of 1905) that information has been received from the Government of the State of Victoria that The Commonwealth Defence Act, 1903, part 6, contains the following sections:—

71. The officer in charge of any artillery or rifle range may stop all traffic during artillery or rifle practice on any road or waterway crossing the line of fire, or in dangerous proximity thereto.

72. No ships, boats, or persons shall come, or remain within the prescribed distance of any ship, battery, gun, or person engaged in artillery or rifle practice, or shall remain in any position so as to obstruct such practice.

The Defence Authorities have also given Notice that all forts from which practice is carried on will fly a red flag from the masthead of the flagstaff. All ships and boats should be kept at a distance of at least 800 yards to the left and one mile to the right of the line of fire from a distance of 6,000 yards from the battery in accordance with part 6, No. 20, of the above Act.

This Notice affects the following Admiralty Chart:—Australia Directory, vols. I, II, and III, chapter I.

AUSTRALIA, SOUTH—Port Adelaide River.

Decreased depths in approach.

No. 190 (third publication).—The British Admiralty has given notice (No. 373 of 1905) that recent soundings show that the depths in the vicinity of the soundings of 4 fathoms shown on the Chart at a distance of 13 cables N. 33° W. from Wonga shoal light-house have decreased by about 6 inches. A note to this effect has been placed on the Charts. Vessels of deep draught should give it a wide berth when near low water.

Approximate position, lat. 34° 49 S., long. 138° 26′ E.

(*Variation 5° Easterly in 1905*)

This Notice affects the following Admiralty Chart:—Port Adelaide, No. 1752: Also Australia Directory, Vol. I, 1897, page 326.

AUSTRALIA, SOUTH—Spencer Gulf.

Germein bay, Port Pirie approach—Beacon established.

Secret rock—Buoy established.

No. 191 (third publication).—The British Admiralty has given notice (No. 375 of 1905) that the following beacon and buoy have been established to mark the undermentioned shoals in Spencer gulf:—

Germein bay.—The three feet shoal, situated at a distance of 6$\frac{1}{10}$ miles N. 8° W. from the northern point of Jarrold point, has been marked by a black pile beacon, surmounted by a circular-shaped red topmark, erected in the centre of the shoal.

Approximate position, lat. 33° 9¼′ S., long. 137° 48¼′ E.

Also, that Secret rock in the northern approach to port Lincoln has been marked by a black buoy, surmounted by a staff and diamond-shaped top-mark, moored in a depth of 18 feet on its eastern edge.

Approximate position, lat. 34° 31¼′ S., long. 136° 7½′ E.

(*Variation 5° Easterly in 1905.*)

This Notice affects the following Admiralty Charts:—St. Vincent and Spencer gulfs, No. 2889b; Wood point to Lowly point, No. 403. Also, Australia Directory, Vol. I, 1897, pages 254, 199; and Supplement, 1900, page 13.

EASTERN ARCHIPELAGO—Sumatra, West coast.

Pulo Marak.—Non-existence of bank.

No. 192 (third publication).—The British Admiralty has given notice (No. 378 of 1905) that the bank of 6 fathoms shown on the charts at a distance of 6 cables S. 73° W. from Ujong Sarang, Burung, Pulo Marak, has been erroneously placed in that position, and does not exist; it should therefore be expunged from the charts.

Approximate position, lat. 1° 12¾′ S., long. 100° 19′ E.

(*Variation Nil in 1905.*)

The Notice affects the following Admiralty Chart:—Ujong Masang to Ujong Indrapura, No. 709: Also, China Sea Directory, vol. I, 1896, page 297; and Supplement, 1899, page 20.

EASTERN ARCHIPELAGO—Sumatra, north coast.

Jambu Ayer or Diamond point. Light established.

No. 193 (third publication).—With reference to Notice to Mariners No. 123, dated the 15th April 1905, issued by this office, the British Admiralty has given notice No. 380 of 1905 that a *white flashing* light *every five seconds*, elevated 87 feet above high water, and visible in clear weather from a distance of 15 miles, has been established in a screw pile structure, erected in a depth of 9 feet on the sand spit projecting from Jambu Ayer or Diamond point. The light is of the 4th order, the duration of the flash being under one-tenth of a second.

Approximate position, on Chart 219, lat. 5° 16¾′ N., long. 97° 29¼′ E.

This Notice affects the following Admiralty Charts:—Bay of Bengal, No. 70; Bassein river to Pulo Penang, No. 830; Acheh head to Tyingkok bay, No. 2760: Malacca strait, No. 1355; Acheh head to Diamond point, No. 219; Diamond point to Pulo Berhala, No. 1353: also List of Lights, Part VI, 1905, page 63; and China Sea Directory, Vol. I, 1896, page 65.

BRITISH EMPIRE.

Caution when approaching British ports.

No. 194 third publication).—The British Admiralty has given notice (No. 381 of 1905) that The Lords Commissioners of the Admiralty having taken into consideration the fact that circumstances may arise in which it might be necessary on account of periodical exercises, manœuvres, or otherwise, to forbid all entrance to the naval ports at night, this is to give Notice that on approaching the shores of Great Britain, or any British dependency, if search-lights are observed to be in constant operation, the naval harbours should be approached with great caution, as it may be apprehended that obstructions may exist outside the port, or that the entrances may altogether be closed, and the examination service may be in force.

To signify that an entrance is closed, three *red* vertical lights will be exhibited in some conspicuous position in or near the approach to a port, and as far as possible Notice of the act will be given by "look-out" vessels in the offing.

JAPAN—Korea strait—Tsu sima

Oguchi Sao Zaki Mitsu shima—Rocks in the vicinity.

No. 195 (third publication).—The British Admirably has given notice (No. 383 of 1905) of the existence of the undermentioned rocks in the following position off Tsu sima:—

a. Oguchi, Ima Haru bay. A rock, with a depth of 4½ fathoms over it, situated at a distance of 5¾ cables N. 70° E. from Observatory rock. This rock has been marked on its northern side by a red conical buoy surmounted by a triangular topmark.

A rock, with a depth of 4½ fathoms over it, situated at a distance of 5¾ cables N. 75° E. from Observatory rock. This rock has been marked by a red cask buoy surmounted by a triangular topmark.

The depth on Naku zone immediately to the westward of the above rocks is 3¾ fathoms, not 4½ fathoms, as shown on the Charts.

Approximate position, Observatory rock, lat. 34° 19′ N., long. 129° 13½′ E.

b. SAO ZAKI. A rock, with a depth of 4 fathoms over it, to the northward of Sao zaki, situated in a position from which the western extremity of Sao zaki bears S 58° W., distant 8¼ cables, and the 965 feet hill S. 47° E.

Approximate position, lat. 34° 39¾′ N., long. 129° 20′ E.

At a distance of a quarter of a cable to the northward of this rock there is another head with a depth of 4½ fathoms over it.

c. TOYO WAN. A rock, with a depth of 2¾ fathoms over it, is situated in the approach to Toyo wan, north end of Tsu sima, in a position from which Mitsu shima light bears N. 48° W., distant 1$\frac{8}{10}$ miles, and Kajiga zone △S. 29° W.

Approximate position, lat. 34° 42¾′ N., long. 129° 28½′ E.

There is a rocky patch, with a depth of 3¼ fathoms over it, situated at a distance of 1$\frac{5}{10}$ cables N. 41° E from this rock; the ground between these two heads is foul.

(*Variation 4° Westerly in 1905.*)

This notice affects the following Admiralty Chart:—Western coasts of Kiusiu, etc., No. 358; Korean archipelago, No. 104; Fusan harbour to port Hamilton, No. 3366; Tsu sima, No. 2385; Tsu sima sound No. 2710: Also Sailing Directions for Japan 1904, pages 123, 122 124.

JAPAN—HONSHU—RIKUCHU GULF.

Amori.—Wreck in anchorage.

No. 196 (third publication).—The British Admiralty has given notice (No. 384 of 1905) that the wreck of the S.S. *Chitose Maru* with two masts above water lies sunk in Aomori anchorage, in a position from which the pier end bears S. 11° E.. distant 2¼ cables, and the north-western angle of the railway station wharf N. 87° W. The wreck is marked by a red flag by day and a *red fixed* light by night.

Approximate position, lat. 40° 50½′ N., long. 140° 44¾′ E.

(*Variation 5° Westerly in 1905.*)

This notice affects the following Admiralty Chart:—Plan of Aomori anchorage on Chart No. 101: Also, Sailing Directions for Japan, 1904, page 687.

JAPAN—NAIKI (INLAND SEA).

Shimonoseki strait (Simonoseki) strait—Buoyage altered.

No. 197 (third publication).—The British Admiralty has given notice (No. 387 of 1905) that in the course of a few days the following alterations would be made in the buoyage of Simonoseki strait.

Light buoys established.

Eastern entrance:—

a. A black light-buoy, marked "Manjushima," and exhibiting a *white fixed* light, would be established on the northern side of the eastern entrance, in a position from which the eastern extremity of Manjushima bears N. 11° W., distant 3¼ cables, and Kushi zaki N. 85° W.

b. The red conical buoy on the south-eastern edge of the Naka no su, situated 10¼ cables N. 25° E. from He saki light, would be replaced by a red light-buoy marked "Naka no su East No. 2," exhibiting a *red occulting* light *every six seconds*, thus:—light, *four seconds*; eclipse, *two seconds*.

c. The light-buoy on the north-eastern end of the Naka no su, situated 13 cables N. 27° E. from He saki lighthouse, would be marked "Naka no su East No. 1."

d. The black conical buoy, near the west end of Naka no su, situated at a distance of 13 cables N. 44° W. from He saki light, would be replaced by a black light-buoy exhibiting a *white fixed* light.

e. The red conical buoy marking Tobigasu, situated at a distance of 11¾ cables N. 42° W. from He saki light, would be replaced by a red light-buoy, exhibiting a *white occulting* light *every six seconds*, thus:—light, *four seconds*; eclipse, *two seconds*.

f. A black light-buoy, marked "Kanabuse," and exhibiting a *red fixed* light, would be established in a position from which Kanabuse beacon light bears South, distant 3¼ cables, and Dan no ura light S. 66° W.

g. The can buoy marking the south-west end of Moji shoal, situated at a distance of 5 cables S. 23° E. from the observation spot Simonoseki, would be replaced by a light-buoy painted in black and white horizontal bands and exhibiting a *red occulting* light *every six seconds*, thus:— light, *four seconds;* eclipse, *two seconds.*

Approximate position, He saki light, lat. 33° 57½′ N., long. 131° 1′ E.

h. A black light-buoy, marked "Ganryu jima," would be established in a position from which the south-eastern extremity of Ganryu jima bears S. 45 W., distant 2¼ cables, and Hane ishi N. 37° W.

Approximate position, lat. 33° 56¼′ N, long. 130° 56′ E.

Western entrance:—

a. The red conical buoy marking Ozo ne, situated at a distance of 1¼ miles S. 21° E. from Daiba hana light, would be replaced by a red light-buoy exhibiting a *red occulting* light *every six seconds*, thus:—light, *four seconds;* eclipse, *two seconds.*

b. The red conical buoy marking Kasa ze, situated at a distance of one mile S. 8° E from Daiba hana light, would be replaced by a light-buoy exhibiting a *white fixed* light.

c. The red conical buoy marking Toridashi, situated at a distance of 6¼ cables S. 44° W. from Daiba hana light, would be replaced by a red light-buoy marked "Funaze," exhibiting a *white occulting* light *every six seconds*, thus:—light, *four seconds*; eclipse, *two seconds.*

Approximate position, Daiba hana light, lat. 33° 57′ N., long. 130° 52¼′ E.

(*Variation 4° Westerly in 1905.*)

This Notice affects the following Admiralty Charts:—Hirado no seto to Simonoseki strait; No. 127; Simonoseki strait to Maruyama saki, No. 3225; Simonoseki strait, Nos. 532 and 1578, Moji ko, No. 3114; Also, Sailing Directions for Japan, 1904, pages 498, 499, 500, 502, 504, 505, 506.

NEW ZEALAND—North island, west coast.

Kaipara bar beacons—Amended positions given.

No. 198 (third publication).—With reference to Notice to Mariners No. 134, dated 1st May 1905, issued by this office, the British Admiralty has given further notice (No. 395 of 1905) that the two beacons erected on the North Head, Kaipara harbour, are painted black with white bull's eyes, and that the rear beacon is situated at a distance of 5 cables N. 59° E., and the front beacon at a distance of half a cable S. 45° E. from the light-house and not in the positions described in the above Notice. These beacons in line N. 52° E. lead over the bar in a depth of 4¼ fathoms at low-water springs.

Approximate position of light-house, lat. 36° 23′ S., long. 174° 8½′ E.

(*Variation 15° Westerly in 1905.*)

This Notice affects the following Admiralty Chart:—Kaipara harbour, No. 2614: Also, New Zealand Pilot, 1901, page 244.

INDIA, WEST—Bombay harbour.

Cross island reef—Beacon erected.

No. 199 (third publication).—The British Admiralty has given notice (No. 400 of 1905) that a stone cylindrical beacon, painted red, elevated about 13 feet above high water, has been erected on Cross island reef in a position from which South channel beacon bears S. 70° W., distant 360 yards, and Cross island flagstaff N. 14° E.

Approximate position, lat. 18° 56½′ N., long. 72° 51½′ E.

(*Variation Nil in 1905.*)

This Notice affects the following Admiralty Chart:—Bombay harbour, No. 2621; port of Bombay, No. 655: Also, West Coast of Hindustan Pilot, 1898, page 201; and Supplement, 1903, page 15.

JAPAN—HONSHU (NIPON)—EAST COAST.

Oginohama Ro (Sendai) light—Arc of visibility.

No. 200 (third publication).—With reference to Notice to Mariners No. 158, dated 14th May 1904, issued by this office, the British Admiralty has given further notice (No. 401 of 1905) that, on and after the 25th March 1905, the arc of visibility of the *red fixed* light on Kitsune ana Saki, Oginohama, would be altered to show from the bearing of S. 35° E., through east and north, to S. 55° W.

Approximate position, lat. 38° 22½′ N., long. 141° 27′ E.

(*Variation 4° Westerly in* 1905.)

This Notice affects the following Admiralty Chart :—Plan of Oginohama on Chart No. 3216 : Also, List of Lights, Part VI, 1905, No 1017 ; and Sailing directions for Japan, &c., 1904, page 393.

BAY OF BENGAL—BURMA COAST.

Akyab harbour—Lower Spit buoy replaced.

No. 201 (third publication).—With reference to Notice to Mariners No. 186, dated the 3rd June, issued by this office, a further telegraphic communication has been received from the Port Officer, Akyab, stating that the Lower Spit buoy has been replaced in position.

BAY OF BENGAL—COROMANDEL COAST.

Ammapatam and Tondi ports—Buoys removed.

No. 202 (third publication).—The Presidency Port Officer, Madras, has given notice (No. 20 of 1905) that the Buoys marking the anchorages of the Ammapatam and Tondi ports will be removed from the 1st August 1905 as they are no longer required.

INDIA, WEST—BURMA COAST.

Murdeshwar—Date of removal of the Dart Rock buoy.

No. 203 (third publication).—With reference to Notice to Mariners No. 187, dated the 3rd June, issued this by Office, the Bombay Government has given further notice (No. 52 of 1905) that the Dart Rock buoy off Murdeshwar was removed for the South-West Monsoon on the 15th May 1905.

E. J. BEAUMONT, COMDR., R.I.M.,
Port Officer of Calcutta.

REGISTERED No. C209.]

No. 26 of 1905.

SUPPLEMENT TO

The Calcutta Gazette.

WEDNESDAY, JUNE 28, 1905.

OFFICIAL PAPERS.

[*Non-Subscribers to the* GAZETTE *may receive the* SUPPLEMENT *separately on payment of five rupees per annum if delivered in Calcutta, or seven rupees and eight annas if sent by post.*]

CONTENTS.

	Page.
RESOLUTION on the Report on Emigration from the Port of Calcutta to British and Foreign Colonies in the year 1904	955
Liberality of Srimati Dinamoni Chaudhurani of Santosh...	957
Return of Joint-stock Companies for the year 1904-1905 ...	958
Weather and Crop Report for the week ending the 26th June 1905	955
CIRCULAR and Eastern Canals for the week ending Saturday the 24th June 1905	959
Irrigation Operations of Faal Rabi, 1904-1905	960
Results of the Meteorological Observations taken at the Alipore Observatory from 18th to 24th June 1905 ...	962
Eastern Bengal State Railway during the month of March 1905	963
Weekly Return of Traffic Receipts on Indian Railways ...	965

RESOLUTION ON THE REPORT ON EMIGRATION FROM THE PORT OF CALCUTTA TO BRITISH AND FOREIGN COLONIES IN THE YEAR 1904.

GENERAL DEPARTMENT—EMIGRATION.

Darjeeling, the 19th June 1905.

RESOLUTION—No. 1014T.—G.

READ—

The Annual Report on Emigration from the Port of Calcutta to British and Foreign Colonies in the year 1904.

The most important administrative measures of the year 1904 were (*a*) the passing of an amending Act (XII of 1904) to provide for the levy of fees under section 108, and the extension of the application of Chapter XIV of the Indian Emigration Act, 1883 (XXI of 1883), and (*b*) the incorporation in the statutory rules of special provisions calculated to prevent the spread of tuberculosis among emigrants during voyages on boardship.

2. Six emigration agencies were at work during the year, of which five represented British colonies. The total number of emigrants registered was 10,286. As in previous years, recruitment was most active in the United Provinces of Agra and Oudh, from which 72·92 per cent. of the emigrants came, the districts furnishing the largest numbers being Fyzabad and Basti. Of the persons admitted into sub-depôts, 1,213 were rejected on the spot as unfit to emigrate. The number of these rejections was thus larger than in the

previous year; and this probably indicates that greater care is being exercised in medical inspection in the districts. Eight thousand seven hundred and thirty-four persons were admitted to the Calcutta depôts. This number was further reduced by the rejection of 648 as unfit, by desertion, by transfer to other agencies, by release, and in other ways to 7,451, of whom 7,135 were shipped during the year and 316 were left in the depôts for subsequent despatch. These figures show a decided falling off as compared with the figures for 1903, when 11,161 persons were accommodated in the Calcutta depôts and 9,084 were actually embarked for the colonies.

3. The demand for labour also decreased, only 7,501 emigrants being requisitioned as against 9,893 in the previous year. The supply is shown as 6,901; but, if the 1,030 emigrants who were supplied in 1904 to meet the requisitions of 1903 be deducted from this figure, the result is a total deficit of 1,630, as against the deficit of 1,099 shown for the preceding year. This further shortage is attributed to the prevalence of plague, the good harvests of the two previous years, and the increased demand for local labour. The colonies which received the largest number of emigrants were Natal (1,638) and Mauritius (1,404). No labour was demanded by, or supplied to, Jamaica.

4. The decrease in the number of emigrants has produced a corresponding effect on the Emigration Fund. In 1903 this fund showed receipts of Rs. 31,189, an expenditure of Rs. 25,862, and a closing balance of Rs. 5,327. The receipts during the year 1904 were Rs. 19,590 and the expenditure was Rs. 29,451. The balance has thus been converted into a deficit of Rs. 9,860, due to the falling off by Rs. 10,041 in the fees realized for emigrants embarked.

5. During the year 4,377 immigrants left the colonies and returned to India, bringing with them savings amounting in the aggregate to Rs. 7,64,327, or, on an average, to Rs. 174 a head, as compared with Rs. 166 returned for the year immediately preceding. Only 691 adults (*i.e.*, 15·78 of the total) are said to have returned without any accumulations.

6. The thanks of the Lieutenant-Governor are due to Dr. Banks, who held the office of Protector of Emigrants throughout the year, for his careful administration and report.

By order of the Lieutenant-Governor of Bengal,

H. W. C. CARNDUFF,

Offg. Secy. to the Govt. of Bengal.

LIBERALITY OF SRIMATI DINAMONI CHAUDHURANI OF SANTOSH.

No. 1245T.—M., dated Darjeeling, the 21st June 1905.

From—E. A. GAIT, Esq., Offg. Secretary to the Govt. of Bengal, Municipal Dept.,
To—The Commissioner of the Rajshahi Division.

I AM directed to acknowledge the receipt of your letter No. 254Jct., dated the 1st June 1905, in which you report that Srimati Dinamoni Chaudhurani, wife of the late Babu Baikunta Nath Chaudhuri of Santosh, in the district of Mymensingh, has paid Rs. 15,000 for the construction of a phthisis ward at the Lowis Jubilee Sanitarium, Darjeeling.

2. In reply I am to request that you will be so good as to convey to the donor the thanks of the Lieutenant-Governor for her liberality and public spirit.

RETURN OF JOINT-STOCK COMPANIES FOR THE YEAR 1904-1905.

No. I.

Abstract of Joint-Stock Companies for the year 1904-05.

	Companies divided into shares.			Companies limited by guarantee, *i.e.*, possessing no capital paid-up.	
	Number of Companies.	Nominal Capital.	Paid-up Capital.	Number of Companies.	Number of Members.
1	2	3	4	5	6
		Rs.	Rs.		
Working at the close of 1903-04	416	22,27,68,034	17,06,00,828	7	1,407
Registered during 1904-05	28	1,32,65,000	8,16,700	.....	.....
Capital increased during 1904-05	70	58,11,700	99,28,109	.....	.....
Capital decreased during 1904-05	4	12,50,250	8,43,006	.....	.....
Ceased to work during 1904-05	14	69,54,000	50,98,329	.....	.....
Working at the close of 1904-05	430	23,36,40,484	17,54,04,302*	7	1,407

* The amount represents share capital only, and does not include loans raised on debentures.

B. L. CHANDRA,
Registrar of Companies.

No. II.

Joint-Stock Companies registered during the year 1904-'5.

Number on the register.	Date of registration.	Classification and name of Company.	Objects of Company.	Nominal Capital.	Paid-up Capital.	Situation of the Registered Office.
1	2	3	4	5	6	7
		I.—Banking Loan and Insurance Companies.		Rs.		
		(a) Banking and Loan Companies.				
1603	31st Mar. 1905 ...	Tamluk Loan Office Co., Ld. ...	To carry on the business of lending money.	30,000	...	Brick-built three-storied premises on the Strand Road in Bazar Parlutipore, Tamluk, Midnapore.
			Total ...	30,000		
		II.—Trading Companies.				
		(a) Merchants and Traders.				
1575	10th May 1904 ...	New India, Ld	To carry on the business of newspaper proprietors, general printers, publishers and advertisers.	30,000	...	Nos. 3-4, Hare Street, Calcutta.
1576	13th „ „ ...	Sudha Bastu Pracharak Co., Ld ...	To establish agencies for the purchase and sale of pure and unadulterated *ghee*, sugar, flour, etc.	20,000	...	No. 12, Mullick's Street, Calcutta.
1580	8th Aug. „ ...	Jessore Swadeshi Bhandar Co., Ld.	To purchase and sell articles of Indian manufacture.	10,000		
1587	28th Oct. „ ...	Barakar Brick and Tile Syndicate, Ld.	To carry on the business of brick and tile manufacturers, pipe makers, potters, flint grinders, earthenware manufacturers, etc	1,00,000	...	Barakar, East Indian Railway, Bengal.
1591	23rd Dec. „ ..	Faridpur Joint-Stock Co., Ld. ...	Dealers in cloths, etc.	20,000	...	Ward No. 3, Faridpur town, district Faridpur.
1592	14th Jan. 1905 ...	Capital, Ld.	To acquire the business of the newspaper "Capital" and to carry on the business of printers and publishers.	1,00,000	...	No. 98, Clive Street, Calcutta.

Number on the register.	Date of registration.	Classification and name of Company.	Objects of Company.	Nominal Capital.	Paid-up Capital.	Situation of the Registered Office.
1	2	3	4	5	6	7
		II.—TRADING COMPANIES—*concld.*		Rs.	Rs.	
		(*a*) *Merchants and Traders*—concld.				
1593	31st January 1905	Art Syndicate, Ld.	To carry on the business of photographers, painters, litho-printers, etc.	20,000	.....	No. 3, Humayon Place, Chowringhee, Calcutta.
1597	28th February „	Alpha Building and Land Investment Co., Ld.	To carry on the business of builders, contractors, etc.	2,50,000	.....	
1599	9th March „	Bengal Engineering Co., Ld. ...	To carry on the business of builders, contractors, mechanical engineers, etc.	1,00,000	.....	No. 100, Clive Street, Calcutta.
1600	18th „ „	Eastern Landing, Clearing and Forwarding Co., Ld.	To carry on the business of general carriers, forwarding and clearing agents, etc.	5,00,000	.....	No. 3, Fairlie Place, Calcutta.
			Total ...	11,50,000	.....	
		(*b*) *Co-operative Association.*				
1585	11th October 1904	Motihari Co-operative Stores, Ld. ...	To encourage and develop Indian manufactures and industries, to open a store-house at Motihari and in other places in the district of Champaran, and to collect and sell goods of Indian or foreign manufactures.	10,000	.....	No. 37, Pakri Bazar, Motihari.
1586	12th „ „	Chota Nagpur Co-operative Stores Co., Ld.	To supply goods of all descriptions, to develop local industries, trades and commerce.	20,000	.....	
			Total ...	30,000	.....	
			GRAND TOTAL ...	11,80,000	.....	

				Rs.	Rs.	
		III.—Mills and Presses.				
		(a) Jute Mills.				
1579	30th June 1904 ...	Arathoon Jute Mills, Ld. ...	To carry on the business of spinners and weavers of jute and cotton, etc.	32,00,000	.....	No. 34, Jackson's Ghât Street, Calcutta.
		(b) Cotton and Jute Screws and Presses.				
1590	22nd Dec. „ ...	Prior Fibres Empire, Ld. ...	To carry on the business of cotton ginning, bailing and pressing and wool burring, etc.	50,00,000		
		(c) Other Mills and Presses.				
1583	19th Sept. „ ...	Bhaduri Co., Ld.	To establish oil or any other mills ...	40,000		
1596	24th Feb. 1905 ...	Fort William Flour Mills Co., Ld.	To carry on the business of "milling and preparing flour, rice and other commodities."	4,00,000	.....	No. 7, Clive Row, Calcutta.
			Total ...	4,40,000	.....	
			Grand Total ...	86,40,000	... ..	
		IV.—Tea and other Planting Companies.				
		(a) Tea.				
1581	8th Aug. 1904 ...	Mullootar Tea Co., Ld. ...	To cultivate and manufacture tea ...	25,000	16,900	No. 14, Old Court House Street, Calcutta.
1594	3rd Feb. 1905 ...	Dayapore Ditto	To carry on the business of cultivators and manufacturers of tea.	1,60,000		No. 32, Jackson's Ghât Street, Calcutta.
1595	18th „ „ ...	Dima Ditto	Ditto ditto ...	2,50,000		No. 20, Strand Road, Calcutta.
			Total ...	4,35,000	16,900	
		(b) Others.				
1588	1st Dec. 1904 ...	Indian (Long Stapled) Cotton Growing Syndicate, Ld.	To carry on the business of cotton planters in all its branches.	10,00,000	.....	No. 20, Strand Road, Calcutta.
			Total ...	14,35,000	16,900	

Number on the register.	Date of registration.	Classification and name of Company.	Objects of Company.	Nominal Capital.	Paid-up capital.	Situation of the Registered Office.
1	2	3	4	5	6	7
		V.—Mining and Quarrying Companies.				
		(a) *Coal.*		Rs.	Rs.	
1574	28th April 1904 ...	Bhalgora Coal Co., Ld. ...	To carry on the business of colliery proprietors, coke manufacturers, miners, smelters, engineers, lime burners and cement manufacturers.	8,00,000	7,99,900	No. 6, New China Bazar Street, Calcutta.
1577	14th May „ ...	Jherriah Coal Syndicate, Ld. ...	To carry on the business of miners of coal and manufacturers of coke and cement.	1,00,000	.....	No. 4, Clive Row, Calcutta.
1578	1st June. „ ...	Busserya Coal Co., Ld. ...	To carry on the business of colliery proprietors, coke and cement manufacturers, builders, etc.	1,00,000	.....	No. 229, Darmahatta Street, Calcutta.
1598	3rd March 1905	Empire Coal Co., Ld. ...	To carry on the business of colliery proprietors, coke and cement manufacturers, etc.	1,00,000	.....	No. 4, Mangoe Lane, Calcutta.
			Total ...	11,00 000	7,99,800	
		VI.—Ice Manufacturing Companies.				
1589	10th Dec. 1904 ...	Calcutta Ice Association, Ld. ...	Manufacturing Ice	4,50,000	.....	No. 103, Clive Street, Calcutta.
		VII.—Other Companies.				
1573	14th April 1904 ...	Central Bengal Zamindary Co., Ld.	To carry on the business of zamindars and land-owners.	3,30,000	.....	Shikarpore, Nuddea, Bengal.
1602	27th March 1905...	Shamnagar Land Co., Ld. ...	To carry on the business of zamindars, farmers, graziers, fruit and vegetable growers, etc.	1,00,000	.....	No. 4, Fairlie Place, Calcutta.
			Total ...	4,30,000	.....	

B. L. CHANDRA.

No. III.

Companies limited by guarantee registered during the year 1904-05.

Nil.

B. L. CHANDRA,
Registrar of Companies.

No. IV.

Joint-Stock Companies that have increased their Capital during the year 1904-05.

Number on the register.	Date of registration.	Classification and name of Company.	Date of increase.	Previous Capital.		Present Capital.		Difference.	
				Nominal.	Paid-up.	Nominal.	Paid-up.	Nominal.	Paid-up.
1	2	3	4	5	6	7	8	9	10
		I.—Banking, Loan and Insurance Companies.		Rs.	Rs.	Rs.	Rs.	Rs.	Rs.
		(a) Banking and Loan Companies.							
983	8th April 1895	Ghatail Loan and Insurance Co., Ld. ...	28th Sept. 1904	20,000	5,880	20,000	6,280	.....	400
1137	8th July 1896	Bhowanipur Banking Corporation, Ld.	24th March 1905	1,00,000	50,825	1,00,000	54,875	.....	4,050
1292	28th Nov. „	Sylhet National Co , Ld.	25th June 1904	1,00,000	13,990	1,00,000	14,660	.....	670
1305	12th Dec. „	Kumarkhali Banking Corporation, Ld.	18th „ „	20,000	14,910	20,000	15,510	.....	600
1504	1st Aug. 1901	Stein Forbes & Co., Ld.	23rd Dec. „	3,00,000	.....	3,00,000	1,37,393	.....	1,37,393
1516	28th Nov. „	Basirhat Loan Co., Ld.	3rd June „	20,000	15,940	20,000	19,280	.....	3,340
1517	4th Dec. „	Brahmanbaria Loan Co., Ld. ...	15th Dec. „	20,000	4,220	20,000	12,000	.....	7,780
1553	16th July 1903	North Bengal Bank, Ld.	3rd June „	50,000	.....	50,000	8,588	.....	8,588
		(b) Insurance Companies.							
756	7th June 1903	Cachar Marine, Fire, Life Insurance and Banking Co., Ld.	19th April 1904	1,00,000	36,510	1,00,000	36,885	.....	375
1357	17th Feb. 1897	Damurhada Paribarik Sansthan Co., Ld.	30th May 1904	9,000	2,612	9,000	2,754	.....	142
		II.—Trading Companies.							
		(a)—Merchants and Traders.							
980	30th March 1895	Burn & Co., Ld.	22nd Dec. 1904	49,00,000	31,79,700	49,00,000	43,10,200	.....	11,30,500
1011	20th Aug. „	Bharat Samiti, Ld.	5th July „	5,00,000	98,100	5,00,000	98,825	.....	725
1399	6th Sept. 1897	Cachar Club Co., Ld.	21st April „	40,000	39,900	40,000	40,000	.....	100
1486	15th April 1901	Bengal Chemical and Pharmaceutical Works, Ld.	21st July „	1,00,000	42,000	1,00,000	56,700	.....	14,700

1520	25th Feb.	1902	R. Glen & Co., Ld.	15th Nov.	„	1,00,000	40,500	1,00,000	90,000	.....	49,500
1529	2nd July	„	Indian Stores, Ld.	23rd May	„	5,00,000	.....	5,00,000	50,235	.....	50,235
1540	16th Dec.	„	Shalimar Paint Colour and Varnish Co., Ld.	2nd Nov. 11th May	„ „	3,00,000	.....	4,00,000	3,00,000	1,00,000	3,00,000
1548	22nd April	1903	Ganges Rope Co., Ld.	4th July	„	7,00,000	.....	7,00,000	3,52,500	.....	3,52,500
1549	12th June	„	Indian Patent Stone Co., Ld. ...	29th Mar.	1905	1,00,000	.....	1,00,000	1,00,000	.....	1,00,000
1552	13th July	1903	Bengal Printing Company, Limited ...	3rd Sept.	1904	1,25,000	.....	1,25,000	66,970	.....	66,970
1557	14th Sept.	„	Bengal Dhan Chhatai and Chira Preparing Company, Limited.	19th	„ „	20,000	.....	20,000	9,684	.....	9,684
1563	17th Oct.	„	Katwa United Home, Limited ...	31st Oct.	„	6,000	.....	6,000	2,400	.....	2,400
			(b) Navigation.								
1535	2nd Sept.	1902	Dwara Flotilla Company, Limited ...	24th Jan.	1905	4,25,000	.....	4,25,000	4,05,200	.....	4,05,200
1543	22nd Dec.	„	Retriever Flotilla Company, Limited	11th May	1904	4,00,000	.....	4,00,000	2,50,000	.....	2,50,000
			(c) Railways and Tramways.								
613	23rd June	1890	Bengal Provincial Railway Company, Limited.	2nd July	1904	11,00,000	8,48,781	11,00,000	8,48,821	.....	40
987	2nd May	1895	Howrah-Amta Light Railway Company, Limited.	26th May 28th Mar.	„ 1905	9,00,000	9,00,000	13,00,000	13,00,000	4,00,000	4,00,000
1501	19th July	1901	Bukhtiarpur-Bihar Light Railway Company, Limited.	6th April	1904	8,00,000	7,99,700	8,00,000	8,00,000	.....	300
1527	17th April	1902	Dwara-Therria Railway Company, Limited.	28th Sept.	„	14,00,000	7,02,040	14,00,000	9,36,100	.....	2,34,060
1555	30th July	1903	Barasat-Basirhat Light Railway Company, Limited.	28th Mar.	1905	9,50,000	.....	9,50,000	7,62,900	.....	7,62,900
			(d) Co-operative Associations.								
617	4th Aug.	1890	Jamalpur Co-operative Stores Association, Limited.	12th Dec.	1904	8,000	7,971	8,000	7,999	.....	28
786	28th Sept.	1893	Indian Pioneers Co., Ld. ...	16th May	1904	20,000	9,780	20,000	9,843	.....	63
			III.—Mills and Presses.								
			(a) Jute Mills.								
361	28th Sept.	1877	Kamarhatty Co., Ld.	26th Oct.	1904	16,00,000	16,00,000	32,00,000	16,00,000	16,00,000	.....
461	30th Dec.	1882	Kanknarrah Co., Ld.	31st Aug.	„	40,00,000	36,00,000	40,00,000	40,00,000	.....	4,00,000
625	18th Sept.	1890	Howrah Mills Co., Ld.	7th March	1905	43,75,000	28,68,675	43,75,000	36,74,625	.....	3,05,950
908	1st Aug.	1894	Clive Mills Co., Ld.	12th Jan.	„	16,00,000	16,00,000	32,00,000	16,00,000	16,00,000	.....
999	12th July	1895	Khurdah Co., Ld.	7th Mar.	„	12,00,000	12,00,000	15,00,000	12,00,000	3,00,000	.....

Number on the register.	Date of registration.	Classification and name of Company.	Date of increase.	Previous Capital		Present Capital.		Difference.	
				Nominal.	Paid-up.	Nominal.	Paid-up.	Nominal.	Paid-up.
1	2	3	4	5	6	7	8	9	10
		III.—Mills and Presses—*concld.*		Rs.	Rs.	Rs.	Rs.	Rs.	Rs.
		(*a*) *Jute Mills*—concld.							
1021	21st Sept. 1895	Alliance Jute Mills Co., Ld. ...	31st Jan. 1905	30,00,000	15,00,000	30,00,000	19,50,000	.....	4,50,000
1029	29th Oct. „	Gauripur Co., Ld.	23rd Feb „	50,00,000	30,50,700	50,00,000	38,50,000	.....	7,99,300
1409	27th Dec. 1897	Delta Jute Mills Co., Ld.	10th Dec. 1904 21st Jan. 1905	12,00,000	11,75,000	19,00,000	12,00,000	7,00,000	25,000
1538	13th Nov. 1902	Chittagong Co., Ld.	14th Sept. 1904	5,00,000	.....	5,00,000	2,91,000	.....	2,91,000
1558	25th Sept. 1903	Dalhousie Jute Co., Ld.	15th Feb. 1905	30,00,000	2,48,750	30,00,000	14,52,500	.....	12,03,750
		(*b*) *Other Mills and Presses.*							
1033	11th Nov. 1895	Howrah Oil Mills Co., Ld. ...	27th March 1905	1,00,000	98,500	1,00,000	1,00,000	.....	1,500
1454	15th July „	Monarch Flour Mills Co., Ld. ...	2nd „ „	3,00,000	2,49,992	3,00,000	2,99,992	.....	50,000
1497	13th June 1901	Ramkristopur Rice Mills, Ld. ...	11th Nov. 1904	50,000	18,260	50,000	24,000	.....	5,740
		IV.—Tea and other Planting Companies.							
		(*a*) *Tea.*							
237	23rd March 1872	Hoolangooree Tea Co., Ld. ...	26th Sept. 1904	4,00,000	4,00,000	4,35,000	4,00,000	35,000	.....
341	25th July 1876	Amlucki Tea Co., Ld. ...	6th April 1904 21st May „	4,46,500	4,45,700	5,45,700	5,20,700	99,200	75,000
498	28th May 1884	Kaliti Tea Co., Ld.	16th Sept. 1904	80,000	70,100	80,000	70,300	.....	200
823	16th Feb. 1894	Choonabhutti Tea Co., Ld. ...	2nd March 1905	4,00,000	3,50,000	4,00,000	4,00,000	.....	50,000
834	17th March „	Hattikhira Tea Co., Ld.	25th April 1904	9,00,000	8,87,592	9,00,000	8,87,600	.....	8
993	18th June 1895	Banarhat Tea Co., Ld.	17th March 1905	10,00,000	8,00,000	10,00,000	8,59,400	.....	59,400

1089	10th April 1896	Indeswar Tea and Trading Co., Ld. ...	9th May 1904	1,00,000	87,335	1,00,000	88,585	.....	1,250
1093	25th „ „	Chuniajhora Tea Co., Ld.... ...	7th June „	1,00,000	79,875	1,00,000	80,500	.....	625
1472	13th July 1900	Atiabari Tea Co., Ld.	8th July „	75,000	32,586	75,000	59,293	.....	26,707
1565	14th Nov. 1903	New Samanbagh Tea Co., Ld. ...	3rd May „	3,00,000	.....	3,00,000	3,00,000	.....	3,00,000
		V.—Mining and Quarrying Companies.							
		(a)—*Coal.*							
660	18th Dec. 1890...	Bengal Nagpur Coal Co., Ld. ...	18th March 1905	2,25,000	2,25,000	3,37,500	2,25,000	1,12,500	.....
976	12th March 1895	Equitable Coal Co, Ld. ...	15th June 1904 22nd March 1905	12,00,000	12,00,000	20,00,000	19,95,000	8,00,000	7,95,000
996	5th July „	Jherria Colliery Co., Ld.	3rd Oct. 1904	3,00,000	2,50,000	3,00,000	2,75,000	.....	25,000
1408	20th Dec. 1897	Tasra Coal Co., Ld.	28th Feb. 1905	4,00,000	3,33,000	4,00,000	3,50,500	...	17,500
1459	8th „ 1899	New Kurkend Coal Syndicate, Ld. ...	16th April 1904	1,00,000	1,00,000	1,50,000	1,00,000	50,000	.....
1511	24th Sept. 1901	Palamow Coal Co., Ld.	14th March 1905	5,00,000	84,248	5,00,000	1,18,748	.....	34,500
1525	14th April 1902	Sejooah Coal Co., Ld.	21st Jan. „	5,00,000	4,80,000	5,00,000	5,00,000	.....	20,000
1532	12th Aug. „	Nichinta Coal Co., Ld.	6th June 1904	3,00,000	1,33,750	3,00,000	1,33,760	.....	10
1544	23rd Dec. „	Kasoonda and Nyadee Collieries, Ld. ...	27th Oct. „	5,50,000	5,02,000	5,50,000	5,14,000	.....	12,000
		(b) *Others.*							
981	5th April 1895	Kera Iron Stone Syndicate, Ld. ...	23rd June 1904	1,25,000	38,200	1,25,000	45,000	.....	6,800
1518	19th Dec. 1901	Bikanir and Dehra Dun Prospecting and Mining Co., Ld.	14th March 1905	5,00,000	56,734	5,00,000	1,05,550	... ..	48,816
1524	5th April 1902	New Sonapet Co., Ld.	14th April 1904	88,000	21,000	88,000	41,000	.....	20,000
1526	17th „ „	Maolong Lime and Coal Co., Ld. ...	4th Nov. „	9,50,000	7,32,270	9,50,000	7,37,480	.....	5,210
		VI.—Ice Manufacturing Co., Ld.							
1386	7th May 1897	Naraingunge Aërated Water Co., Ld.	9th Dec. 1904	10,000	8,500	25,000	8,500	15,000	.....
		VII.—Other Companies.							
1408	27th April 1900	Khorooria Mejojillah Zemindary Syndicate, Ld.	23rd Jan. 1905	90,000	7,200	90,000	10,800	.....	3,600
1559	25th Sept. 1903	Holland Johnstone Hoist Syndicate, Ld.	11th March „	3,00,000	.....	3,00,000	1,01,000	.....	1,01,000

B. L. CHANDRA,

Registrar of Companies.

No. V.

Joint-Stock Companies that have reduced their Capital during the year 1904-05.

Number on the register.	Date of registration.	Classification and name of Company.	Date of reduction.	Previous Capital.		Present Capital.		Difference.	
				Nominal.	Paid-up.	Nominal.	Paid-up.	Nominal.	Paid-up.
1	2	3	4	5	6	7	8	9	10
		I.—Banking, Loan and Insurance Companies.		Rs.	Rs.	Rs.	Rs.	Rs.	Rs.
		(a) Banking and Loan Companies.							
1465	22nd Feb. 1900	Commercial Bank of India, Ld. ...	28th Feb. 1905	48,00,000	27,99,472	39,99,750	23,90,300	8,00,250	4,09,172
		II.—Trading Companies.							
		(a) Merchants and Traders.							
90	1st April 1863	R. Scott Thomson & Co., Ld.	29th March „	5,00,000	4,67,000	2,50,000	2,33,500	2,50,000	2,33,500
		III.—Mills and Presses.							
		(a) Cotton Mills.							
1127	15th June 1896	Sri Gangaji Cotton Mills Co., Ld. ...	7th March „	10,00,000	4,74,934	10,00,000	4,74,600	.....	334*
		IV.—Mining and Quarrying Companies.							
		(a) Coal.							
592	8th Feb. 1890	Damuda Coal Co., Ld.	28th Dec. 1904	6,00,000	5,97,000	4,00,000	3,97,000	2,00,000	2,00,000

* Owing to forfeiture of twenty shares.

B. L CHANDRA,
Registrar of Companies.

No. VI.

Joint-stock Companies that having ceased to work, have gone into liquidation or have been finally dissolved (or otherwise become defunct) during the year 1904-05.

Number on the register.	Date of registration.	Classification and name of Company.	Nominal capital.	Paid-up capital.	Date of going into liquidation.	Date of final dissolution.
1	2	3	4	5	6	7
		I.—Banking, Loan and Insurance Companies.	Rs.	Rs.		
		(a) Insurance Companies.				
1377	9th April 1897 ...	Baradaha Sahayya Fund Co., Ld.	20,000	1,356	.....	Defunct.
		II.—Trading Companies.				
		(a) Merchants and Traders.				
765	19th July 1893 ...	East Bengal Joint-Stock Co., Ld.	20,000	... ..	.....	Defunct.
1554	25th July 1903 ...	Eureka Press Co., Ld.	20,000	.....	18th Feb. 1905	
		(b) Railways and Tramways.				
1326	7th Jan. 1897 ..	Brahmaputra-Sultanpur Branch Railway Co., Ld. ...	36,00,000	29,99,940	15th Nov. 1904 ...	15th Nov. 1904.
		III.—Mills and Presses.				
		(a) Mills for Cotton, Jute, Wool, Silk, Hemp, etc.				
741	25th Jan. 1893 ...	Oriental Hosiery Manufacturing Co., Ld.	2,00,000	43,052	.....	Defunct.
		(b) Cotton and Jute Screws and Presses.				
213	16th Sept. 1867 ...	Nasmyth's Patent Press Co., Ld.	4,00,000	4,00,000	25th Feb. 1904 ...	14th Dec. 1904.
		(c) Other Mills and Presses.				
744	10th Mar. 1903 ...	Calcutta Roller Flour Mills Co., Ld.	1,50,000	1,50,000	8th Sept. 1904	

Number on the register.	Date of registration.	Classification and name of Company.	Nominal Capital.	Paid-up Capital.	Date of going into liquidation.	Date of final dissolution.
1	2	3	4	5	6	7
		IV.—Tea and other Planting Companies.	Rs.	Rs.		
		(a) Tea.				
242	15th July 1872 ...	Dessai and Parbuttia Tea Co., Ld.	6,00,000	6,00,000	21st July 1902 ...	2nd Mar. 1905.
349	5th Jan. 1877 ...	Dehing Co, Ld.	10,00,000	10,00,000	20th Mar. 1905	
815	5th Feb. 1894 ...	Sillooh Tea Co., Ld.	2,25,000	1,51,780	27th Nov. 1897 ...	25th Oct. 1904.
		(b) Others.				
637	6th Oct. 1890 ...	Ramnugger Indigo Concern, Ld.	1,40,000	1,40,000	14th June 1898 ...	29th April 1904.
		V.—Mining and Quarrying Companies.				
		(a) Coal.				
1393	15th July 1897 ...	Daling Coal Co, Ld.	2,00,000	2,00,000	13th April 1904	
1505	7th Aug. 1901 ...	Damuda Valley Coal Syndicate, Ld.	24,000	.....	28th June 1904.	
1546	25th Feb. 1903 ...	Ghunsadih Coal Co., Ld.	1,00,000	.....	11th Oct. „ ...	21st Feb. 1905.
		(b) others.				
699	13th Aug. 1891 ...	Kallyanpur-Bihar Gold Mining Co., Ld.	9,00,000	.....	.....	Defunct.
		VI.—Ice Manufacturing Companies.				
367	9th July 1878 ...	Bengal Ice Manufacturing Co., Ld.	5,00,000	5,00,000	8th Dec. 1904	
481	14th Aug. 1883 ...	Crystal Ice Supply Co., Ld.	2,00,000	2,00,000	8th Dec. „	
		VII.—Other Companies.				
986	26th April 1895 ..	Sulkea Manufacturing Co., Ld.	1,00,000	75,000	17th June 1902 ...	12th Sept. 1904.
1484	7th Mar. 1901 ...	Chota Nagpur Automobile Co, Ld.	20,000	3,981	5th Sept. 1904.	

B. L. CHANDRA,
Registrar of Companies.

No. VII.

Companies limited by guarantee that having ceased to work have gone into liquidation or have been finally dissolved (or otherwise become defunct) during the year 1904-1905.

Nil.

B. L. CHANDRA,
Registrar of Companies.

No. VIII.

List (Classified Abstract) of Joint-Stock Companies at work on 31st March 1905.

Classification of Company.	Total number.	Aggregate nominal Capital.	Aggregate paid-up Capital.
1	2	3	4
		Rs.	Rs.
I.—Banking, Loan and Insurance Companies—			
(a) Banking and Loan Companies	50	3,15,19,750	2,77,20,874
(b) Insurance Companies	7	74,73,000	7,43,546
Total of Banking, Loan and Insurance Companies ...	57	3,89,92,750	2,84,64,420
II.—Trading Companies—			
(a) Merchants and Traders	74	1,57,86,700	1,01,98,813
(b) Navigation	5	34,65,000	22,95,200
(c) Railways and Tramways	14	1,58,15,000	1,45,64,546
(d) Co-operative Associations	13	3,34,400	2,82,812
(e) Shipping, Landing and Warehousing	3	18,00,000	16,03,700
Total of Trading Companies ...	109	3,72,01,100	2,89,45,071
III.—Mills and Presses—			
(a) Cotton Mills	7	1,16,75,000	77,49,600
(b) Jute Mills	22	5,27,05,000	3,94,25,725
(c) Mills for Cotton, Jute, Wool, Silk, Hemp, etc.	3	23,58,000	17,36,000
(d) Cotton and Jute Screws and Presses	9	76,10,000	22,46,100
(e) Other Mills and Presses	11	45,20,000	37,23,492
Total of Mills and Presses ...	52	7,88,68,000	5,48,80,917
IV.—Tea and other Planting Companies—			
(a) Tea	128	3,60,88,380	3,22,72,158
(b) Others	6	23,42,500	11,50,525
Total of Tea and other Planting Companies ...	134	3,84,30,880	3,34,22,683

V.—Mining and Quarrying Companies—			
(*a*) Coal	43	2,70,04,500	2,23,48,796
(*b*) Others	18	63,75,000	32,59,232
Total of Mining and Quarrying Companies ...	61	3,33,79,500	2,56,08,028
VI.—Ice Manufacturing Companies	5	5,98,254	74,670
VII.—Sugar Manufacturing Companies	1	16,00,000	16,00,000
VIII.—Other Companies	11	45,70,000	24,08,513
GRAND TOTAL	430	23,36,40,484	17,54,04,302

B. L. CHANDRA,

Registrar of Companies.

No. IX.

List (Classified Abstract) of Companies limited by guarantee at work on 31st March 1905.

Classification of Company.	Total number.	Number of members.
1	2	3
I.—Insurance Companies	2	20
II.—Trading Ditto	2	900
III.—Other Ditto	3	487

B. L. CHANDRA,
Registrar of Companies.

No. X.

Statement of fees realised during the year 1904-05.

1	2
	Rs. A.
Amount of fees realised under Act VI of 1882	9,517 8
Ditto ditto XXI of 1860	173 8
Total ...	9,691 0

B. L. CHANDRA,
Registrar of Companies.

WEATHER AND CROP REPORT.

For the week ending the 26th June 1905.

Burdwan.—Rainfall at Sadar 0·61, Kalna 0·71, Katwa 1·06, Raniganj 3·41. Weather ot. Sowing of *aman* paddy continues. Jute and rice being weeded. More rain urgently anted. Fodder sufficient. Recent rains have abated a little the water scarcity in thana sansol. No cattle-disease. Common rice sells as follows :—

	Srs.	ch.	
Sadar	13	8	per rupee.
Kalna	12	5	
Katwa	13	8	
Raniganj	13	0	

Birbhum.—Rainfall at Sadar 3·11, Rampur Hât 2·63. Weather sultry. Sowing of addy continues. Prospects of sugarcane not good. Fodder and water sufficient. Common ice sells as follows :—

	Srs.	ch.	
Sadar	14	4	per rupee.
Rampur Hât	15	0	

Bankura.—Rainfall at Sadar 0·99, Vishnupur 0·47. Weather hot and cloudy. Standng crops withering. Rain very urgently needed. Fodder and water sufficient. No attle-disease. Common rice sells as follows :—

	Srs.	ch.	
Sadar	13	12	per rupee.
Vishnupur	13	12	

Midnapore.—Rainfall at Sadar 2·03, Contai 0·71, Tamluk 0·36, Ghatal 1·34. Ploughng and sowing continue slowly. Paddy seedlings drying up. More rain wanted. odder and water sufficient. Cattle-disease reported from Dantan. Common rice sells as ollows :—

	Srs.	ch.	
Sadar	15	0	per rupee.
Contai	18	0	
Tamluk	14	0	
Ghatal	13	0	

Hooghly.—Rainfall at Sadar 0·04, Serampore 0·25, Arambagh 0·53. Weather very hot. owing of winter paddy seeds over. Lands being prepared for winter paddy. Fodder and ater sufficient. No cattle-disease. Common rice sells as follows :—

	Srs.	ch.	
Sadar	10	0	per rupee.
Serampore	11	1	
Arambagh	13	3	

Howrah.—Rainfall at Sadar 0·16. Weather exceptionally hot. Rain badly wanted. Jute and sugarcane thriving. Fodder and water sufficient. Common rice sells as follows :—

	Srs.	ch.	
Sadar	13	0	per rupee.
Ulubaria	13	8	

24-Parganas.—Rainfall at Sadar 0·98, Barasat 0·31, Barrackpore 0·52, Basirhat nil, Diamond Harbour nil. Weather hot and cloudy. Weeding of early rice and jute nearly inished Seedlings are withering for want of rain. Prospects of crops unfavourable for delay in arrival of rains. Fodder and water sufficient. A few cases of cattle-disease reported from Mograhat thana. Common rice sells at 12 seers per rupee.

Nadia.—Rainfall at Sadar 0·05, Kushtia 0·72, Meherpur 0·03, Chuadanga nil, Ranaghat 0·33. Weather very hot. Rain needed for standing crops. Fodder and water sufficient. No cattle-disease. Common rice sells as follows :—

	Srs.	ch.	
Sadar	12	0	per rupee.
Kushtia	14	0	
Meherpur	11	0	
Chuadanga	12	0	
Ranaghat	13	0	

Murshidabad.—Rainfall at Sadar 1·95, Lalbagh 1·88, Jangipur 0·88, Kandi 0·53. Weather hot and cloudy. Prospects of jute and sugarcane good at Lalbagh, but not so at angipur. Rain wanted for early rice, jute and sugarcane. Early rice and sugarcane good t Kandi. Paddy seeds are being sown. Fodder and water sufficient. No cattle-disease. ommon rice sells as follows :—

	Srs.	ch.	
Sadar	13	0	per rupee.
Lalbagh	12	4	
Jangipur	13	8	
Kandi	14	0	

Jessore.—Rainfall at Sadar 0·02, Jhenida nil, Magura 1·35, Narail nil, Bangaon 0·06. Weather very hot. Prospect of standing crops fair. Rain is badly wanted. Fodder and water sufficient Common rice sells as follows:—

	Srs.	ch.	
Sadar	13	0	per rupee.
Jhenida	12	12	
Magura	12	8	
Narail	13	5	
Bangaon	13	5	

Khulna.—Rainfall at Sadar nil. Satkhira 1·06, Bagerhat 0·15. Weather unusually hot. Sowing of autumn and winter rice (broadcast) estimated at 73 and 27 per cent. respectively. Fodder and water sufficient. Few cases of cattle-disease reported from Baitaghata. Common rice sells as follows:—

	Srs.	ch.	
Sadar	14	8	per rupee.
Satkhira	13	0	
Bagerhat	15	0	

Rajshahi.—Rainfall at Sadar 2·53, Nator 1·43, Naugaon 1·70. Weather showery. All crops thriving. Fodder and water sufficient. Cattle-pox reported from one village. Common rice sells as follows:—

	Srs.	ch.	
Sadar	15	0	per rupee.
Nator	14	12	
Naugaon	13	8	

Dinajpur.—Rainfall at Sadar 1·77, Thakurgaon 7·27. Fall general. Weather seasonable. Lands are being prepared for winter rice. Prospects of jute and early rice are good. Sugarcane looks promising. Fodder and water sufficient. No cattle-disease. Common rice sells as follows:—

	Srs.	ch.	
Sadar	14	8	per rupee.
Thakurgaon	13	0	
Balughat	14	0	

Jalpaiguri.—Rainfall at Sadar 11·05. Weather hot and cloudy. Jute and autumn rice are doing well. Lands are being prepared for winter rice. Fodder and water sufficient. Common rice sells at 12½ seers per rupee.

Darjeeling.—Report not received.

Rangpur.—Rainfall at Sadar 4·35, Kurigram 6·40, Gaibanda 2·22, Nilphamari 4·73. Weather cloudy. Weeding of jute almost finished. Prospect of jute unfavourable. Common rice sells as follows:—

	Srs.	ch.	
Sadar	13	0	per rupee.
Kurigram	13	0	
Gaibanda	12	0	
Nilphamari	12	0	

Bogra.—Rainfall at Sadar 0·85. Fall general. Weather hot and cloudy. Weeding of early rice and jute continues in places. Cultivation for winter rice going on. Condition of jute fair. Fodder and water sufficient. Common rice sells at 13½ seers per rupee.

Pabna.—Rainfall at Sadar 1·44, Sirajganj 1·70. Weather partially cloudy and very hot. Prospects of standing crops fair. Weeding of paddy and jute continues. Harvesting of *til* has commenced. Fodder and water sufficient. No cattle-disease. Common rice sells at 12 seers per rupee.

Dacca—Rainfall general except at Sadar. Weather seasonable. Prospects of crops good. Fodder available. No cattle-disease. Common rice sells as follows:—

	Srs.	ch.	
Sadar	14	0	per rupee.
Manikganj	12	0	
Munshiganj	13	0	
Narayanganj	13	0	

Mymensingh.—Rainfall at Sadar 2·75, Jamalpur 4·47, Kishorganj 4·75, Netrakona 15·25. Weather seasonable. Prospects of standing crops fair. Transplantation of winter rice continues. *Til* doing well. Fodder and water ample. No cattle-disease. Common rice sells as follows:—

	Srs.	ch.	
Sadar	15	0	per rupee.
Jamalpur	14	8	
Kishorganj	14	0	
Netrakona	16	0	

Faridpur.—Rainfall at Sadar 1·03, Goalundo 2·53, Madaripur 0·80. Weather very hot. Prospects of standing crops good. Fodder and water sufficient. No cattle-disease. Common rice sells at 13 seers per rupee.

Backergunge.—Rainfall nil. Weather hot. Fodder sufficient. No cattle-disease. Common rice sells at 12¾ seers a rupee.

Tippera.—Rainfall at Sadar 2·24, Brahmanbaria 4·88, Chandpur 0·06. Weather seasonable. State of standing crops good. Sowing of winter paddy going on. Fodder and water sufficient. No cattle-disease. Common rice sells as follows :—

	Srs.	ch.	
Sadar	12	12	per rupee.
Brahmanbaria	14	8	
Chandpur	13	0	

Noakhali.—Rainfall at Sadar 3·42, Feni 1·11. Weather hot. Cultivation of lands for transplantation of winter paddy commenced. Prospects fair in Sadar, good in Feni. Fodder and water sufficient. Cattle-disease reported. Common rice sells as follows :—

	Srs.	ch.	
Sadar	12	0	per rupee.
Feni	14	0	

Chittagong.—Rainfall at Sadar 1·15, Cox's Bazar 0·43. Weather very hot and cloudy. More rain wanted. Cultivation of early rice going on. Fodder and water sufficient. Cattle-disease reported. Common rice sells as follows :—

	Srs.	ch.	
Sadar	13	0	per rupee.
Cox's Bazar	13	6	

Chittagong Hill Tracts.—Rainfall 0·80. Weather excessively hot. *Jum* cultivation continues. Cattle-disease continues. Common rice sells at 11 seers per rupee.

Patna.—Rainfall at Sadar 0·04, Dinapore 0·26, Bihar 0·12. Weather hot and occasionally cloudy. Sowing of maize in progress. Mandua seedlings and sugarcane are drying up in the scorching heat. Rain much wanted for paddy sowings. Fodder and water sufficient. No cattle-disease. Common rice sells as follows :—

	Srs.	ch.	
Sadar	13	8	per rupee.
Dinapore	12	0	
Bihar	13	8	

Gaya.—Rainfall at Sadar 0·07, Nowadah 0·08, Jahanabad 0·01. Weather very hot, with easterly and westerly winds. Sugarcane doing well. Fields are being prepared for *bhadoi* crops. Rain urgently needed. Fodder and water sufficient. Common rice sells at 12 seers per rupee.

Shahabad.—Rainfall at Sadar 0·43, Buxar 0·25, Sasseram 0·40. Rain badly wanted. Sugarcane being irrigated. Fodder and water abundant. Common rice sells at Sadar at 14 seers per rupee.

Saran.—Rainfall at Sadar 0·62, Siwan nil, Gopalganj 0·29. Weather very hot. *Cheena* being harvested. Sowing of *bhadoi* paddy commenced in places. Sugarcane doing well. More rain needed Fodder and water sufficient. No cattle-disease. Common rice and maize sell at Sadar at 12½ and 18 seers per rupee respectively.

Champaran.—Rainfall at Sadar 1·53, Bettiah 2·48. Weather hot and cloudy. Rain did good for standing crops and facilitated, sowing of winter and *bhadoi* paddy, which is progressing Sugarcane and indigo doing well. Fodder and water sufficient. No cattle-disease. Common rice and maize sell at 13¾ and 21 seers per rupee, respectively.

Muzaffarpur.—Rainfall at Sadar 0·09, Hajipur 0·02, Sitamarhi 1·96. Weather hot and occasionally cloudy. Prospects of crops favourable. Sowing of winter paddy and *bhadoi* crops going on. Fodder and water sufficient. No cattle-disease. Common rice and maize sell at 12 and 17 seers per rupee, respectively, at Sadar.

Darbhanga.—Rainfall at Sadar 0·09, Samastipur 0·69, Madhubani 2·05. Weather hot and cloudy. Sowing of *bhadoi* crops in progress. Fodder and water sufficient. No Cattle-disease reported. Common rice sells as follows :—

	Srs.	ch.	
Sadar	14	9	per rupee.
Samastipur	14	0	
Madhubani	13	0	

Monghyr.—Rainfall at Sadar nil, Begusarai 0·05, Jamui nil. *Bhadoi* crops being sown and lands ploughed for *aghani* crops. Want of rain is damaging the *bhadoi* crops, sugarcane and paddy already planted. No cattle-disease. Fodder and water sufficient. Common rice sells as follows :—

	Srs.	ch.	
Sadar	12	8	per rupee.
Begusarai	12	0	
Jamui	12	0	

Bhagalpur.—Rainfall at Sadar 0·05, Banka 1·01, Madhipura and Supaul nil. Weather hot and cloudy. Rains urgently needed. Agricultural operations will be seriously

retarded unless there is early rain. Fodder and water sufficient. A few cattle-disease reported. Common rice sells as follows:—

	Srs. ch.	
Sadar	13 14	per rupee.
Banka	15 0	
Madhipura	15 0	
Supaul	17 0	

Purnea.—Rainfall at Sadar 0·97. Weeding of *bhadoi* paddy continues. Lands being prepared for winter paddy. Condition of standing crops good. Fodder and water sufficient. No cattle-disease. Common rice sells at Sadar at 11¼ seers per rupee.

Malda.—Rainfall at Sadar 0·86, Chanchal 1·83, Nawabganj 0·68, Gazole 3·00, Shibganj 0·67. Weather hot and cloudy. Lands being ploughed for winter paddy. Prospects of *bhadoi* crops and jute good. Rain urgently required. Fodder and water sufficient. No cattle-disease. Common rice sells at 12 seers per rupee.

Sonthal Parganas.—Rainfall at Sadar 1·08, Godda 1·93, Jamtara 2·27, Pakour 0·80, Rajmahal 0·83. Weather hot. The sowing of maize, *bajra* and *mandua* at Pakour has been retarded for want of rain. In Dumka it is going on. At Rajmahal the extent of sowing is 70 per cent. Sugarcane doing well. Fodder and water sufficient. Common rice sells at 12 seers per rupee at Sadar.

Cuttack.—Rainfall at Sadar 0·56, Jajpur 2·73, Kendrapara 0·59, Banki 0·50. Weather hot. *Saradh* germinating. *Biali*, jute and sugarcane growing. Late cotton being picked. *Mandua* being sown. Rain is badly wanted. Fodder and water sufficient. Condition of cattle generally good. Common rice sells at Cuttack at 15¾ seers per rupee.

Balasore.—Rainfall at Sadar 0·96. Weather hot. Sowing of paddy continues. Sugarcane thriving. Rain wanted. Fodder and water available. Common rice sells as follows:—

	Srs. ch.	
Sadar	17 0	per rupee.
Bhadrak	16 0	

Angul.—Rainfall nil, Weather hot. Sowing of winter paddy in progress. Fodder and water available. No cattle-disease. Common rice sells at 18 seers a rupee at Sadar and Khondmals.

Puri.—Rainfall at Sadar 0·03, Khurda 0·20. Weather hot. *Dalua* and cotton being harvested. Sugarcane promises well. *Saradh* and *bhadoi* paddy being sown. Condition of miscellaneous crops good. *Mandua* seedlings progressing. Common rice sells at 14 seers 7 chittaks per rupee.

Hazaribagh.—Rainfall at Sadar nil. Weather hot. Sowing of paddy seed commenced in places. Fodder and water sufficient. No cattle-disease. Common rice sells at 12 seers per rupee at Giridih. Prices at Sadar are as follows:—

	Srs. ch.	
Common rice	11 0	per rupee.
Mandua	19 8	
Indian-corn	15 0	

Ranchi.—Rainfall at Sadar 0·36. Weather hot and cloudy. Agricultural operations retarded for want of rain. Cattle-disease reported from Lohardaga and Banda thanas. Fodder and water sufficient. Common rice sells at Sadar at 12 seers per rupee.

Palamau.—Rainfall nil. Weather very hot and cloudy at times. Rain urgently needed. Sugarcane doing well. A few cases of cattle-disease reported. Fodder and water available, but insufficient. Common rice sells at Sadar at 11 seers 13 chitaks per rupee.

Manbhum.—Rainfall at Sadar 0·48, Gobindpur 2·85. Weather very hot. Extent of sowings of *bajra*, *mandua*, maize and cotton is estimated at 25, 50, 37, and 62 per cent. respectively in Gobindpur. Fodder and water sufficient. No cattle-disease. Common rice sells as follows:—

	Srs. ch.	
Sadar	13 0	per rupee.
Gobindpur	12 0	

Singhbhum.—Rainfall at Sadar 0·23. More rain wanted. Ploughing and sowing continued. Fodder and water sufficient. Common rice sells at 13 seers per rupee.

General Summary.—Rainfall during the week was general but light; it was, however, heavy in Dinajpur, Jalpaiguri, Rangpur and Mymensingh. Rain is needed in South-West Bengal, Bihar, Orissa and Chota Nagpur for standing crops as well as for agricultural operations. Prospects otherwise good. Cattle-disease is reported from seven districts. Fodder and water are generally sufficient. Price of common rice has risen in thirteen and fallen in three districts.

D. N. MOOKERJI,

Asstt. Director, for Director of Land Records and Agriculture, Bengal, on tour.

DEPT. OF LAND RECORDS AND AGRICULTURE, BENGAL,

The 27th June 1905.

GOVERNMENT OF BENGAL, IRRIGATION DEPARTMENT.

Approximate Return of Traffic on the Circular and Eastern Canals for the week ending Saturday, the 24th June 1905, as compared with the corresponding week of the previous year.

Nature of Cargo.	Week ending Saturday, the 24th June 1905.			Week ending Saturday, the 5th June 1904.		
	Number of boats.	Weight of cargo.	Tollage.	Number of boats.	Weight of cargo.	Tollage.
		Mds.	Rs.		Mds.	Rs.
Rice and paddy	477	46,633	715	274	50,757	628
Jute	6	4,850*	41	18	8,025†	92
Firewood	34	25,350	376	58	54,635	790
Other articles	657	1,93,304	2,374	633	1,86,076	2,143
Total ...	1,174	2,70,137	3,506	983	2,99,393	3,653

* Weight by canal measurement = 5,425 maunds.
† Ditto ditto = 10,012½ ,,

(No. II.—Rabi statement.)

Government of Bengal, Irrigation Department.

IRRIGATION OPERATIONS OF FASL RABI, 1904-05.

(STATEMENT IN ACRES OF CROPS IRRIGATED IN CANAL DISTRICTS.)

Nature of crops.	Cuttack.	Balasore.	Midnapore.	Burdwan.	Hooghly.	Gaya.	Patna.	Shahabad.	Saran.	Champaran.	Total.
1	2	3	4	5	6	7	8	9	10	11	12
Garden and Orchards ...	54	1	...	256 (*a*)	14 (*a*)	...	34	18	...	...	377
Sugarcane	99	128	...	13	...	136	1,565	16,095	...	...	18,036
Cereals—											
Wheat	1	...	...	...	...	647	217	20,057	...	...	20,922
Barley	...	...	...	...	...	912	1,055	7,371	...	...	9,338
Rice	6,359	266	392	...	...	...	...	2,085	...	...	9,102
Miscellaneous	...	...	...	...	...	1,178	1,437	10,954	...	...	13,569
Pulse—											
Gram, &c.	199	9	...	...	...	117	294	5,530	...	...	6,149
Miscellaneous	...	...	...	...	...	257	1,328	10,165	...	...	11,750
Fodder crops—grass, lucerne	...	...	...	...	...	...	2	15	...	...	17
Fibres—Cotton	2	...	...	...	...	..	...	2	...	...	4
Dyes—											
Indigo	...	...	...	...	...	...	...	...	...	...	...
Turmeric, &c.	...	...	...	...	...	...	...	...	...	...	...
Drugs—											
Opium	...	...	...	...	...	591	368	528	...	...	1,487
Tobacco, &c.	...	...	...	...	...	...	..	...	...	...	...
Oilseeds—											
Mustard, &c	...	...	...	...	...	24	22	265	...	...	311
Castor	...	...	...	...	...	...	...	...	...	...	...
Miscellaneous	6	4	...	...	...	292	11	5,984	...	...	6,297
Hot-weather	12	365	...	...	...	...	...	...	...	...	377
Total Rabi, 1904-05* ...	6,732	773	392	269	14	4,154	6,333	79,069	...	...	97,736
Total Rabi, 1903-04 † ...	4,122	...	...	324	154	7,653	7,667	95,131	...	500	115,551
Average of the five years ending with 1903-04.	3,556	325	375	239	151	7,761	6,125	109,974	680	823	130,009

(*a*) Potato and onion irrigated from the Eden Canal.
* Approximate figures.
† Actual figures.

The 24th June 1905.

W. A. Inglis,
Secretary to the Government of Bengal.

Government of Bengal, Irrigation Department.

IRRIGATION OPERATIONS FOR THE YEAR 1904-05.

[STATEMENT IN ACRES OF CROPS IRRIGATED IN CANAL DISTRICT.]

Nature of crop.	Cuttack.	Balasore.	Midnapore.	Burdwan.	Hooghly.	Gaya.	Patna.	Shahabad.	Saran.	Champaran.	Total.
1	2	3	4	5	6	7	8	9	10	11	12
Garden and orchards ...	54	1	...	256	14	...	34	18	...	...	377
Sugarcane	210	256	...	13	...	2,333	3,081	29,835	...	...	35,728
Cereals—											
Wheat	1	...	...	...	...	647	217	20,059	...	...	20,924
Barley	...	...	...	...	...	912	1,055	7,371	...	...	9,338
Rice	1,78,478	40,829	85,512	20,234	6,082	48,746	40,199	2,63,211	...	4,921	6,88,212
Miscellaneous	...	...	...	...	...	1,183	1,447	11,679	...	...	14,309
Pulse—											
Gram, &c.	199	9	...	...	...	117	294	5,530	...	...	6,149
Miscellaneous	...	...	...	...	...	329	1,328	10,176	...	...	11,833
Fodder crops—grass, lucerne...	...	...	...	...	...	...	2	15	...	...	17
Fibres—cotton	2	...	...	...	...	...	...	2	...	...	4
Dyes—											
Indigo	...	...	...	...	...	...	...	...	...	...	...
Turmeric, &c.	...	...	...	...	...	...	...	...	...	...	...
Drugs—											
Opium	...	...	...	...	...	591	368	528	...	...	1,487
Tobacco, &c.	...	...	...	...	...	...	...	...	...	...	...
Oilseeds—											
Mustard, &c.	...	...	...	...	...	24	22	265	...	...	311
Castor	...	...	...	...	...	...	...	...	...	..	...
Miscellaneous	6	4	...	...	...	292	11	5,986	...	...	6,299
Hot-weather	37	722	...	...	...	1,233	2,790	26,434	...	...	31,216
Total, 1904-05* ...	1,78,987	41,821	85,512	20,503	6,096	56,407	50,848	3,81,109	...	4,921	8,26,204
Total, 1903-04† ...	1,70,011	40,150	93,140	21,377	7,321	56,541	50,088	3,99,174	...	1,044	8,38,846
Average of the five years ending with 1903-04.	1,72,537	35,668	82,099	20,588	8,137	52,612	45,147	3,88,915	2,362	2,497	8,10,562

*Approximate figures.
†Actual figures.

W. A. INGLIS,
Secretary to the Government of Bengal.

The 24th June 1905.

Results of the Meteorological Observations taken at the Alipore Observatory from 18th to 24th June 1905.

Month.	Date.	Maximum in sun.	Number of hours of bright sunshine.	Mean pressure barometer at 32° Fahr	Temperature				Hygrometry				Wind.		Rain.	Weather.
					Mean	Maximum.	Range.	Minimum	Mean wet bulb.	Vapour tension.	Dew point.	Humidity.	Prevailing direction.	Miles recorded.		
				Inches	°	°	°	°	°	Inch.	°	%			Inches.	
June	18th	152·3	4·5	29·470	92·0	99·7	16·8	82·9	84·0	1·062	81·1	71	SE by E, SSW and S.	137	0·07	Chiefly cloudy, o.
,,	19th	157·7	2·2	·473	89·3	99·3	21·1	78·2	83·2	1·061	81·0	77	S and variable ...	155	0·24	Chiefly cloudy, o, p, t, ≤, ⚡.
,,	20th	142·7	0·3	·485	87·4	95·3	19·9	75·4	82·4	1·048	80·7	80	S by E & variable	95	0·20	Chiefly cloudy, o.
,,	21st	149·0	3·4	·526	89·6	96·5	14·6	81·9	84·0	1·092	81·9	79	SE and SSE ...	122	Nil	Chiefly cloudy, o.
,,	22nd	146·0	5·7	·531	89·5	96·6	13·7	82·9	82·2	1·017	79·7	75	S by E and S ...	191	,,	Partially cloudy.
,,	23rd	149·4	0·7	·535	89·3	94·1	9·0	85·1	82·3	1·023	79·9	76	S and SSE ...	197	,,	Chiefly cloudy, o.
,,	24th	132·4	Nil	·534	87·3	93·9	12·6	81·3	80·3	0·934	77·2	71	SSW and S ...	143	,,	Cloudy, o.

The mean pressure of the seven days	Inches.	29·508
The average pressure of the corresponding period for 24 years, Surveyor-General's Office		29·525
	Hours.	
The total number of hours of bright sunshine		16·8
The maximum possible number of hours of sunshine		94·4
The mean temperature of the seven days		89·2
The average temperature of the corresponding period for 24 years, Surveyor-General's Office		84·2
The extreme variation of temperature		24·3
The maximum temperature		99·7
	Miles.	
The highest velocity of the wind in one hour		24
	%	
The mean relative humidity		76
The average relative humidity of the corresponding period for 24 years, Surveyor-General's Office		84
	Inches.	
The total fall of rain from 18th to 24th June 1905		0·51
The average fall of the corresponding period for 24 years, Surveyor-General's Office		3·30
The total fall from 1st January to 24th June 1905		21·71
The average fall of the corresponding period for 24 years, Surveyor-General's Office		19·20

The mean pressure, temperature, etc., are deduced from the traces of the Barograph and Thermograph, and from eye observations.

The maximum and minimum temperatures are obtained from self-registering thermometers. All the thermometers are verified and the readings have been corrected to a standard constructed and verified at the Kew Observatory. They are exposed under a thatched shed open at the sides, and are suspended four feet above the ground.

The barometer readings are corrected to those of the standard, Newman's No. 86, formerly at the Surveyor-General's Office.

The hygrometric elements are obtained from Tables III, IV and V of the official tables computed in the Meteorological Office, and based on Regnault's modifications of August's formula.

The directions and the movement of the wind are taken from the trace of a Beckley's anemograph.

The mouth of the rain-gauge is one foot above the ground. Rainfall reported on any day is for 24 hours preceding 8 A.M. of that day.

o, overcast; p, passing temporary showers; t, thunder; ≤, lightning; ⚡, strong wind.

METEOROLOGICAL OFFICE, GOVT. OF INDIA,
Alipore (Calcutta), the 26th June 1905.

G. W. KÜCHLER,
for Meteorological Reporter to the Govt. of India and Director-General of Indian Observatories.

EASTERN BENGAL STATE RAILWAY.

Abstract of Principal Commodities carried over the Eastern Bengal State Railway during the month of March 1905 as compared with the same month of the previous year.

No.	Staples.	1905.	1904.	Increase in 1905.	Decrease in 1905.	Explanations of fluctuations by Traffic Superintendent.
		Tons.	Tons.	Tons.	Tons.	
1	Apparel, including drapery, haberdashery, millinery, uniforms, accoutrements, boots and shoes.	106	87	19	.....	
2	Coal and coke carried for the Public and Foreign Railways.	57,701	47,193	10,508	.....	
3	Cotton—					
	(1) Raw	200	303	.....	103	
	(2) Manufactured—					
	(a) Twist and yarn, European	176	174	2	.....	
	(b) Ditto, Indian	331	276	55	.....	
	(c) Piece-goods, European	1,691	1,737	.....	44	
	(d) Ditto, Indian	69	89	20	.....	
	(e) Others	.....	.....	.....	.....	
4	Chemicals, excepting saltpetre	125	64	61	.....	
5	Drugs—					
	(1) Intoxicating, other than opium	10	28	.....	18	
	(2) Non-intoxicating—					
	(a) Medicinal preparations	7	.....	7	.....	
	(b) Others	49	102	.....	53	
6	Dyes and Tans—					
	(1) Al (Morinda citrifolia)	.....	.....	.....	.....	
	(2) Alizarine and Aniline dyes	.....	.....	.....	.....	
	(3) Cutch	23	14	9	.....	
	(4) Indigo	1	1	.....	.....	
	(5) Myrabolams	.....	.....	.....	.....	
	(6) Tanning barks	.....	.....	.....	.....	
	(7) Turmeric	357	295	62	.....	
	(8) Others	35	15	20	.....	
7	Fodder—	492	946	.....	454	
	(1) Oilcake	2,975	2,401	572	.....	
	(2) Hay, straw and grass	1,014	961	53	.....	
8	Fruits and vegetables, fresh					
9	Grain and pulse—	4,338	8,188	.....	3,850	
	(1) Gram and pulse	.....	.....	.....	.....	
	(2) Jawar and bajra	11,605	11,689	.....	84	
	(3) Rice in the husk	13,379	12,257	1,122	.....	
	(4) Do. not in the husk	55	120	.....	64	
	(5) Wheat	564	754	.....	190	
	(6) Do. flour	201	15	186	.....	
	(7) Others					
10	Hides and skins—					
	(1) Hides of cattle—	.....	.....	.....	.....	
	(a) Dressed or tanned	2,615	2,343	172	.....	
	(b) Raw					
	(2) Skins of sheep and other animals—	.....	.....	.....	.....	
	(a) Dressed or tanned	145	95	50	.....	
	(b) Raw	8	.....	8	.....	
11	Horns	3,297	537	2,760	.....	
12	Hemp (Indian) and other fibres, excluding jute.					
13	Jute—	9,437	20,912	.....	11,485	
	(1) Raw	2,439	1,519	919	.....	
	(2) Gunny-bags and cloth	153	67	81	.....	
14	Lac					
15	Leather—	.....	.....	.....	.....	
	(1) Unwrought	.....	3	.....	3	
	(2) Wrought, excepting boots and shoes ...					
16	Liquors—	40	39	1	.....	
	(1) Ale and beer	85	91	.....	6	
	(2) Spirits of all kinds, including country spirit.					
	(3) Wine					
	(4) All other sorts, including toddy and fermented liquors, other than ale and beer.					
17	Metals—	29	44	.....	15	
	(1) Brass, unwrought	267	154	103	.....	
	(2) Do., wrought	18	10	8	.....	
	(3) Copper, unwrought	308	4	304	.....	
	(4) Do., wrought					
	(5) Iron and steel—	65	76	.....	11	
	(a) Cast	8	.....	8	.....	
	(b) Unwrought	3,699	2,549	1,150	.....	
	(c) Wrought	324	316	510	.....	
	(d) Manufactures	308	440	.....	132	
	(6) Others					
18	Oils—	17,622	19,808	3,115	.....	
	(1) Kerosene	6	47	.....	41	
	(2) Castor	102	40	62	.....	
	(3) Cocoanut	330	377	.....	47	
	(4) Mustard and rape	196	94	102	.....	
	(5) Others					
19	Oilseed—	10	29	.....	19	
	(1) Castor	.....	.....	.....	.....	
	(2) Earthnuts	2,864	4,326	.....	1,462	
	(3) Linseed	.....	.....	.....	.....	
	(4) Poppy	4,739	3,349	1,390	.....	
	(5) Rape and mustard	223	61	162	.....	
	(6) Til or jinjili	45	161	.....	116	
	(7) Others	.....	.....	.....	.....	
20	Opium	833	1,043	.....	210	
21	Paper and pasteboard					
22	Provisions—	2	.....	2	.....	
	(1) Dried fruits and nuts	54	92	.....	38	
	(2) Ghee	713	702	11	.....	
	(3) Others					

No.	Staples.	1905.	1904.	Increase in 1905.	Decrease in 1905.	Explanations of fluctuations by Traffic Superintendent.
		Tons.	Tons.	Tons.	Tons.	
23	Railway Plant, &c., for the Public and Foreign Railways—					
	(1) Locomotive engines and tenders and parts thereof.	59	3	56	...	
	(2) Carriages and trucks and parts thereof	.....	18	.....	18	
	(3) Materials—					
	(a) Steel rails and fish-plates	5	78	.....	73	
	(b) Sleepers and keys of steel and cast-iron.	94	182	.....	88	
	(c) Others	533	2,314	.....	1,781	
24	Salt	7,275	6,430	845	.....	
25	Saltpetre and other saline substances—					
	(1) Saltpetre	2	4	.....	2	
	(2) Other saline substances	446	276	170	.....	
26	Silk—					
	(1) Raw—					
	(a) Foreign	.....	.....	.....	.....	
	(b) Indian	13	12	1	.....	
	(2) Piece-goods—					
	(a) Foreign	.....	.....	.....	.....	
	(b) Indian	.....	.....	.....	.....	
27	Spices—					
	(1) Betelnuts	1,422	1,081	341	.....	
	(2) Cardamoms	30	11	19	.....	
	(3) Chillies	1,271	1,094	177	.....	
	(4) Ginger	60	77	.....	17	
	(5) Pepper	33	57	.....	24	
	(6) Others	204	205	.....	1	
28	Stone and lime	3,872	4,021	.....	149	
29	Sugar—					
	(1) Refined or crystallised, including sugar-candy.	849	1,036	.....	187	
	(2) Unrefined—					
	(a) Sugar	1,926	1,804	122	.....	
	(b) Gur, rab, jaggery, molasses, and other saccharine produce.	2,066	2,401	265	.....	
30	Tea—					
	(1) Foreign	.....	.....	.....	.....	
	(2) Indian	130	171	.....	41	
31	Tobacco—					
	(1) Unmanufactured	2,134	2,472	.....	338	
	(2) Manufactured—					
	(a) Cigars	.....	.....	.....	.....	
	(b) Other sorts	50	77	.....	27	
32	Wood—					
	(1) Timber, unwrought	3,395	661	2,734	.....	
	(2) Manufactures	243	167	76	.....	
33	Wool—					
	(1) Raw	167	79	88	.....	
	(2) Manufactured—					
	(a) Carpets and rugs	177	6	171	.....	
	(b) Piece-goods, European					
	(c) Ditto, Indian					
	(d) Other sorts of manufactures ...					
34	All other articles of merchandise	8,013	12,892	.....	4,879	
	Total ...	131,960	177,373	30,639	36,052	

B. N. Mitra,

Calcutta, *the 19th June 1905.* for *Offg. Examiner of Accounts, E. B. S. Ry.*

Weekly Return of Traffic Receipts on Indian Railways.

EAST INDIAN RAILWAY.

Approximate Return of Traffic for week ended 10th June 1905 on 1,962·25 miles open.

	Coaching Traffic.		Merchandise and Mineral Traffic.		Other earnings (estimated).	Total earnings.	Traffic Train-miles run.		
	No. of passengers.	Coaching Receipts.	Weight carried.	Receipts.			Coaching.	Merchandise.	Total.
		Rs. A. P.	Mds. S.	Rs. A. P.	Rs. A. P.	Rs. A. P.			
Total traffic for the week	495,686	4,42,347 0 0	61,74,506 0	10,52,177 0 0 (a)	29,860 0 0	15,24,384 0 0	117,278	153,350	300,628
Or per mile of railway	...	225 6 10	...	536 3 4	15 3 6	776 13 3	...	...	...
For previous 23 weeks of half-year	[9,220,406*]	*89,20,207 0 0	14,33,45,028 0†	2,39,78,359 0 0†	6,89,060 0 0‡	3,35,87,616 0 0	2,583,116§	3,957,012§	6,540,128
Total for 23 weeks ...	9,716,092	93,62,744 0 0	14,95,19,536 0	2,50,30,536 0 0	7,18,920 0 0	3,51,12,200 0 0	2,700,394	4,140,362	6,840,756
COMPARISON.									
Total for corresponding week of previous year.	487,917	4,48,997 14 4	70,39,316 20	11,47,518 0 6	34,833 8 6	16,31,349 7 4	116,645	203,318	319,963
Per mile of railway corresponding week of previous year.	.....	229 1 7	.....	598 3 0	18 0 2	843 4 9	.....	... ..	... .
Total for corresponding 23½ weeks of previous year.	10,007,650	96,40,694 5 2	15,26,22,450 20	2,49,46,393 10 5	7,44,709 14 1	3,53,33,796 13 8	2,644,339	4,508,127	7,152,466

(a) The decrease is in grain and seed traffic.
* Deducted No. of passengers 2,113 and Rs. 6,557 } On account of difference between the approximate and audited figures for the week ended
† Added Mds. 61,574 and ,, 93,606 } 29th April 1905.
‡ Deducted ,, 1,471
§ Audited figures up to 29th April 1905.

1905. *Abstract of progressive weekly returns of all earnings for 1905 in comparison with 1904.*

Open mileage.	Period.	Coaching Traffic.		Merchandise and Mineral Traffic.		Other earnings.	Total.	Per mile of Railway.	Train mileage.*	
		No. of passengers.	Rs.	Mds.	Rs.	Rs.	Rs.	Rs.	No.	Rate. Rs. A. P.
*1,932·87	Week ended 7th Jan. ...	573,540	3,90,660	66,67,706	11,46,398	30,547	15,64,495	809	297,548	5 4 1
*1,932·87	,, ,, 14th ,, ...	388,514	4 00,134	61,44,640	11,54,661	30,874	15,85,669	820	307,585	5 2 5
*1,932·87	,, ,, 21st ,, ...	38 ,101	4,27,593	69,60,442	11,86,536	34,457	16,48,586	853	309,187	5 5 4
*1,932·87	,, ,, 28th ,, ...	387,648	3,76,282	71,81,889	11,58,573	32,327	15,67,182	811	308,017	5 3 6
*1,932·87	,, ,, 4th Feb. ...	397,471	3,96,962	64,99,851	10,85,994	33,629	15,15,285	784	296,579	5 1 9
*1,932·87	,, ,, 11th ,, ...	416,257	4,32,258	57,34,098	9,76,834	32,930	14,42,013	746	291,543	4 15 11
*1,932·87	,, ,, 18th ,, ...	401,777	3,86,209	66,57,714	10,17,406	31,118	14,34,733	743	286,801	5 0 8
*1,932·87	,, ,, 25th ,, ...	453,547	4,37,133	75,81,370	11,53,050	33,763	16,21,946	839	294,610	5 8 0
*1,949·66	,, ,, 4th Mar. ...	494,394	4,60,897	67,71,735	10,55,343	35,425	15,49,665	795	288,441	5 7 6
*1,962·25	,, ,, 11th ,, ...	460,289	4,71,866	60,09,797	10,04,143	32,897	15,08,736	769	295,617	5 2 3
*1,962·25	,, ,, 18th ,, ...	437,037	4,41,117	67,26,129	11,78,578	30,761	16,45,456	830	293,157	5 10 1
*1,962·25	,, ,, 25th ,, ...	399,793	3,90,360	64,33,977	11,04,848	31,257	15,24,365	778	301,134	5 1 1
*1,962·25	,, ,, 1st April ...	409,494	4,15,871	67,85,703	10,98,392	29,755	15,43,718	787	302,951	5 1 6
*1,962·25	,, ,, 8th ,, ...	393,234	4,12,805	61,53,148	9,59,985	30,314	14,04,104	716	297,383	4 11 7
*1,962·25	,, ,, 15th ,, ...	428,107	3,84,893	57,61,036	9,25,330	29,780	13,40,703	684	291,439	4 9 9
*1,962·25	,, ,, 22nd ,, ...	424,734	3,89,549	68,34,388	10,12,816	29,389	14,31,754	730	286,308	5 0 0
*1,962·25	,, ,, 29th ,, ...	391,578	3,77,703	68,68,639	12,16,399	30,619	16,24,720	828	301,584	5 6 2
1,962·25	,, ,, 6th May ...	403,716	3,69,243	68,99,993	11,04,167	31,805	15,05,215	767	303,790	4 15 2
1,962·25	,, ,, 13th ,, ...	419,496	3,83,435	62,32,461	10,63,028	30,905	14,76,368	752	298,043	4 15 3
1,962·25	,, ,, 20th ,, ...	429,505	3,88,006	64,50,009	11,27,128	30,905	15,46,039	788	302,549	5 1 9
1,962·25	,, ,, 27th ,, ,,	435,268	3,89,102	66,02,302	11,56,189	30,153	15,75,444	803	305,305	5 3 1
1,962·25	,, ,, 3rd June ...	432,406	3,97,906	63,85,336	10,99,543	29,735	15,27,114	778	306,674	4 15 11
1,962·25	,, ,, 10th ,, ...	495,686	4,42,347	61,74,506	10,52,177	29,860	15,24,384	777	300,628	5 1 2
	Totals up to date ...	9,716,092	93,62,744	14,95,19,536	2,50,30,536	7,18,920	3,51,12,200	788	6,840,756	5 2 1

Abstract of progressive weekly returns of all earnings for 1905 in comparison with 1904—concluded. 1904.

		No. of passengers.	Rs.	Mds.	Rs	Rs.	Rs.	Rs.	No.	Rate. Rs. A. P.
1,934·49	First 9 days of Jan. ...	461,129	4,58,415	79,11,618	12,96,313	36,684	17,91,411	926	378,833	4 11 9
1,934·49	Week ended 16th ,, ,,	433,463	3,99,314	61,02,208	9,99,606	31,739	14,30,653	740	291,020	4 14 8
1,934·49	,, ,, 23rd ,, ...	438,143	4,40,858	55,34,658	9,72,799	29,069	14,42,726	746	292,712	4 14 10
1,934·49	,, ,, 30th ,, ...	409,909	4,21,040	59,70,224	10,03,302	26,379	14,50,721	750	299,066	4 13 5
1,934·49	,, ,, 6th Feb. ...	436,192	4,33,902	66,63,167	10,84,762	29,529	15,48,313	800	305,477	5 1 1
1,934·49	,, ,, 13th ,, ...	426,570	4,15,179	68,55,060	10,06,101	30,457	14,51,737	750	296,953	4 14 3
1,934·49	,, ,, 20th ,, ...	450,236	4,44,971	63,97,335	10,54,190	31,553	15,30,714	791	304,195	5 0 6
1,934·49	,, ,, 27th ,, ...	401,537	4,49,233	66,32,951	10,35,090	29,986	15,14,809	782	305,035	4 15 5
1934·49	,, ,, 5th Mar. ...	401,443	3,99,664	66,09,079	9,73,971	29,215	14,02,850	725	309,726	4 8 5
1,934·49	,, ,, 12th ,, ...	443,408	4,53,634	66,27,353	10,19,118	29,031	15,00,853	776	298,302	5 0 6
1,934·49	,, ,, 19th ,, ...	418,962	4,37,151	58,33,190	10,06,036	28,855	14,74,092	762	305,675	4 13 9
1,934·49	,, ,, 26th ,, ,,	367,507	4,06,532	57,18,382	10,04,291	31,106	14,43,949	746	299,632	4 13 1
1,934·49	,, ,, 2nd April	368,858	3,91,328	65,10,466	10,15,931	28,245	14,35,461	743	308,686	4 10 5
1,934·49	,, ,, 9th ,, ...	384,448	3,84,197	64,20,788	10,40,600	30,581	14,55,443	752	306,966	4 11 10
1,934·49	,, ,, 16th ,, ...	397,906	3,66,456	67,03,330	11,01,655	35,848	15,03,959	777	310,106	4 13 7
1,934·49	,, ,, 23rd ,, ...	446,181	4,13,377	68,77,960	11,46,330	35,644	15,97,351	826	303,412	5 4 3
1,934·49	,, ,, 30th ,, ...	469,735	4,11,879	60,86,016	11,44,084	36,206	15,92,169	823	317,471	5 0 3
1,934·49	,, ,, 7th May ...	501,679	4,16,306	68,98,403	11,63,613	37,255	16,17,196	836	307,510	5 4 3
1,934·49	,, ,, 14th ,, ...	457,107	3,99,753	69,61,514	11,49,771	37,757	15,87,281	821	314,067	5 0 10
1,934·49	,, ,, 21st ,, ...	425,279	4,23,342	75,94,175	11,96,688	37,880	16,56,900	857	312,338	5 4 11
1,934·49	,, ,, 28th ,, ...	416,548	4,01,737	63,78,494	12,25,767	34,795	16,62,236	859	331,757	5 0 2
1,934·49	,, ,, 4th June	448,602	4,23,926	61,15,697	11,56,904	32,050	16,11,880	831	333,047	4 13 5
1,934·49	,, ,, 11th ,, ...	487,917	4,48,998	70,39,317	11,47,518	34,834	16,31,350	843	319,963	5 1 7
	Totals up to date ...	10,007,650	96,40,694	15,26,22,451	2,49,46,393	7,44,709	3,53,33,796	784	7,152,466	4 13 9

* Audited figures.

TARKESSUR BRANCH RAILWAY.

Approximate Return of Traffic for week ended 10th June 1905 on 22·23 miles open.

	Coaching Traffic.		Merchandise and Mineral Traffic.		Other earnings (estimated).	Total earnings.	Traffic Train-miles run.		
	No. of passengers.	Coaching receipts.	Weight carried.	Receipts.			Coaching.	Merchandise.	Total.
		Rs. A. P.	Mds. s.	Rs. A. P.	Rs. A. P.	Rs. A. P.			
Total traffic for the week ...	21,568	5,170 0 0	18,852 0	818 0 0	11 0 0	5,999 0 0	963	225	1,188
Or per mile of railway ...	.....	232 9 1	.....	36 12 9	0 7 11	269 13 9	.....	.....	.....
For previous 23 weeks of half-year	† 558,468*	1,40,423 0 0*	4,39,173 0†	16,776 0 0†	185 0 0‡	1,57,384 0 0	21,944§	4,078§	26,016
Total for 23 weeks ...	580,036	1,45,593 0 0	4,58,025 0	17,594 0 0	196 0 0	1,63,383 0 0	22,907	5,197	28,104
COMPARISON.									
Total for corresponding week of previous year.	20,602	4,908 15 9	13,801 30	543 4 0	7 11 9	5,469 15 6	963	226	1,188
Per mile of railway corresponding week of previous year.	.....	220 13 3	.....	24 7 0	0 5 7	245 9 10	.....	.....	.....
Total for corresponding 23½ weeks of previous year.	605,340	1,54,302 2 7	5,14,536 30	18,893 11 6	184 6 3	1,73,379 13 10	24,355	5,981	30,336

* Deducted No. of passengers 263 and Rs. 111 } On account of difference between the approximate and audited figures for the week ended 29th
† Added Mds. 6,647 and ,, 58 } April 1905.
‡ Do. ,, 3
§ Audited figures up to 29th April 1905.

1905. *Abstract of progressive weekly returns of all earnings for 1905 in comparison with 1904.*

Open mileage.	Period.	Coaching Traffic.		Merchandise and Mineral Traffic.		Other earnings.	Total.	Per mile of railway.	Train mileage.	
		No. of passengers.	Rs.	Mds.	Rs.	Rs.	Rs.	Rs.	No.	Rate. Rs. A. P.
*22·23	Week ended 7th Jan.	20,210	4,756	21,896	805	6	5,567	253	1,188	4 15 6
*22·23	,, ,, 14th ,,	21,863	4,931	18,783	693	4	5,627	249	1,188	4 10 7
*22·23	,, ,, 21st ,,	22,581	5,248	23,036	844	6	6,138	276	1,188	5 3 9
*22·23	,, ,, 28th ,,	21,702	4,994	19,716	726	7	5,727	259	1,188	4 14 7
*22·23	,, ,, 4th Feb.	20,042	4,683	18,613	682	11	5,351	236	1,188	4 8 9
*22·23	,, ,, 11th ,,	21,217	5,152	20,771	857	11	6,000	270	1,188	5 0 10
*22·23	,, ,, 18th ,,	19,657	4,820	18,349	633	6	5,459	246	1,189	4 9 6
*22·23	,, ,, 25th ,,	20,194	6,365	30,704	1,039	6	7,430	334	1,188	6 4 1
*22·23	,, ,, 4th Mar.	37,978	16,642	30,580	1,208	18	11,868	534	1,342	8 13 6
*22·23	,, ,, 11th ,,	30,170	7,718	19,379	779	7	8,504	383	1,427	5 15 4
*22·23	,, ,, 18th ,,	25,841	6,029	20,150	888	7	6,924	312	1,185	5 13 5
*22·23	,, ,, 25th ,,	24,655	6,308	16,329	619	7	6,934	312	1,188	5 13 7
*22·23	,, ,, 1st April	24,302	5,901	20,505	770	8	6,679	300	1,230	5 6 10
*22·23	,, ,, 8th ,,	31,913	8,894	20,326	807	17	9,718	437	1,186	8 3 1
*22·23	,, ,, 15th ,,	56,544	15,984	14,497	600	13	16,596	744	1,629	10 2 6
*22·23	,, ,, 22nd ,,	24,528	6,344	23,493	881	5	7,230	325	1,144	6 5 1
*22·23	,, ,, 29th ,,	23,308	5,463	22,415	779	10	6,252	281	1,181	5 5 11
22·23	,, ,, 6th May	22,247	5,618	23,867	812	8	6,438	290	1,188	5 8 8
22·23	,, ,, 13th ,,	23,911	5,430	10,723	485	6	5,914	265	1,188	4 15 6
22·23	,, ,, 20th ,,	21,764	5,246	14,557	578	6	5,830	262	1,188	4 16 6
22·23	,, ,, 27th ,,	20,914	4,856	13,435	580	10	5,446	245	1,188	4 9 4
22·23	,, ,, 3rd June	21,563	5,016	20,359	949	10	5,975	269	1,188	5 0 6
22·23	,, ,, 10th ,,	21,568	5,170	18,852	818	11	5,999	270	1,188	5 0 10
	Totals up to date ...	580,036	1,45,593	4,58,025	17,594	196	1,63,383	340	28,104	5 13 0

Abstract of progressive weekly returns of all earnings for 1905 in comparison with 1904—concluded. 1904.

		No. of passengers.	Rs.	Mds.	Rs.	Rs.	Rs.	Rs.	No.	Rate. Rs. A. P.
21·22	First 9 days of Jan. ...	25,125	6,268	25,240	1,008	14	7,285	318	1,540	4 11 6
21·22	Week ended 16th ,, ...	19,705	4,483	17,986	588	9	5,074	220	1,188	4 4 4
21·22	,, ,, 23rd ,, ...	21,844	5,220	18,703	709	8	5,939	257	1,188	5 0 0
21·22	,, ,, 30th ,, ...	24,150	5,824	23,313	788	1	6,613	287	1,188	5 9 1
21·22	,, ,, 6th Feb. ...	24,988	7,083	25,793	794	3	7,879	354	1,188	6 10 1
21·22	,, ,, 13th ,, ...	25,590	6,151	30,372	959	6	6,816	306	1,228	5 8 6
21·22	,, ,, 20th ,, ...	39,816	10,661	28,800	733	4	11,397	513	1,496	7 9 11
21·22	,, ,, 27th ,, ...	25,592	6,146	24,789	896	10	7,052	317	1,188	5 15 0
21·22	,, ,, 5th Mar. ...	23,909	6,731	19,187	684	6	7,411	333	1,188	6 3 10
21·22	,, ,, 12th ,, ...	24,231	6,066	27,819	963	7	6,986	313	1,188	5 13 6
21·22	,, ,, 19th ,, ...	28,433	6,953	24,690	1,042	11	7,536	339	1,188	6 5 9
21·22	,, ,, 26th ,, ...	22,188	5,490	19,618	774	15	6,279	282	1,188	5 4 7
21·22	,, ,, 2nd April ...	25,595	6,338	26,686	1,078	9	7,425	334	1,164	6 7 10
21·22	,, ,, 9th ,, ...	39,679	11,751	30,344	1,138	10	12,894	580	1,252	10 7 4
21·22	,, ,, 16th ,, ...	46,259	14,551	21,814	757	16	15,124	680	1,496	10 1 9
21·22	,, ,, 23rd ,, ...	24,107	6,722	22,097	836	13	6,571	309	1,188	5 12 6
21·22	,, ,, 30th ,, ...	26,740	6,785	24,409	983	4	7,764	349	1,188	6 8 5
21·22	,, ,, 7th May ...	25,980	6,486	25,093	853	16	7,315	329	1,188	6 2 6
21·22	,, ,, 14th ,, ...	23,177	6,091	24,286	930	5	7,026	316	1,188	5 14 6
21·22	,, ,, 21st ,, ...	20,958	5,136	16,625	641	1	5,778	260	1,188	4 13 5
21·22	,, ,, 28th ,, ...	21,198	5,141	12,056	502	8	5,647	254	1,188	4 12 1
21·22	,, ,, 4th June ...	20,471	4,999	14,070	557	6	5,562	250	1,188	4 10 10
21·22	,, ,, 11th ,, ...	20,602	4,909	13,801	543	8	5,460	246	1,188	4 9 6
	Totals up to date ...	605,340	1,54,302	5,14,536	18,893	184	1,73,379	334	26,336	6 1 7

* Audited figures.

DELHI-UMBALLA-KALKA RAILWAY.

Approximate Return of Traffic for week ended 10th June 1905 on 162·36 miles open.

	Coaching Traffic.		Merchandise and Mineral Traffic.		Other earnings (estimated).	Total earnings.	Traffic Train-miles run.		
	No. of passengers.	Coaching receipts.	Weight carried.	Receipts.			Coaching.	Merchandise.	Total.
		Rs. A. P.	Mds. S.	Rs. A. P.	Rs. A. P.	Rs. A. P.			
Total traffic for the week	23,855	19,152 0 0	1,48,301 0	17,579 0 0*	60 0 0	36,800 0 0	3,611	4,175	12,786
Or per mile of railway ...	.....	117 15 4	.....	108 4 4	0 6 10	226 10 6	.....	.....	.....
For previous 22 weeks of half-year	535,902*	4,50,454 0 0*	44,22,613 0†	3,58,480 0 0†	1,861 0 0‡	8,10,795 0 0	202,341§	88,784§	291,126
Total for 23 weeks ...	559,757	4,69,606 0 0	45,70,914 0	3,76,059 0 0	1,930 0 0	8,47,595 0 0	210,952	92,960	303,912
Comparison.									
Total for corresponding week of previous year.	26,136	19,570 10 7	1,96,769 0	13,173 6 0	36 12 3	31,788 12 10	9,421	3,837	13,258
Per mile of railway corresponding week of previous year.	.....	120 8 7	.....	74 15 8	0 3 10	195 12 1	.....	.....	.....
Total for corresponding 23½ weeks of previous year.	596,227	5,05,350 14 5	31,23,649 30	2,99,143 0 10	1,396 10 0	8,05,889 9 3	227,618	86,358	314,176

* Added No. of passengers 26 and Rs. 292 } On account of difference between the approximate and audited figures for the week ended 29th April 1905.
† Do. Mds. 50,454 " " 5,462 }
‡ Deducted " 28 }
§ Audited figures up to 29th April 1905.

1905. *Abstract of progressive weekly returns of all earnings for 1905 in comparison with 1904.*

Open mileage.	Period.	Coaching Traffic.		Merchandise and Mineral Traffic.		Other earnings.	Total.	Per mile of railway.	Train mileage.	
		No. of passengers.	Rs.	Mds.	Rs.	Rs.	Rs.	Rs.	No.	Rate. Rs. A. P.
*162·36	Week ended 7th Jan. ...	21,203	18,621	2,37,419	11,933	91	30,645	189	12,992	2 5 9
*162·36	" " 14th " ...	21,276	18,385	1,18,935	13,508	107	32,408	200	13,092	2 7 9
*162·36	" " 21st " ...	20,051	15,778	1,32,269	13,546	108	29,430	181	13,513	2 2 10
*162·36	" " 28th " ...	22,030	17,068	1,06,407	17,716	116	34,897	215	13,202	2 10 1
*162·36	" " 4th Feb. ...	21,423	18,986	1,07,182	11,213	79	27,278	168	13,731	2 0 8
*162·36	" " 11th " ...	21,231	17,441	1,74,872	17,541	114	35,104	216	12,820	2 11 10
*162·36	" " 18th " ...	22,538	16,262	1,37,412	16,671	119	33,052	204	13,241	2 7 11
*162·36	" " 25th " ...	26,876	20,450	2,00,280	22,124	114	42,678	263	12,716	3 5 8
*162·36	" " 4th Mar. ...	26,888	19,781	2,03,441	15,119	58	34,958	215	12,996	2 11 0
*162·36	" " 11th " ...	27,330	24,458	1,07,631	15,120	61	39,639	244	13,117	3 0 4
*162·36	" " 18th " ...	25,093	24,525	1,07,036	17,477	75	42,077	259	12,581	3 5 6
*162·36	" " 25th " ...	24,492	22,435	2,05,014	16,651	85	39,171	241	13,720	2 13 8
*162·36	" " 1st April ...	30,523	20,220	4,02,274	20,330	76	40,626	306	14,717	3 5 11
*162·36	" " 8th " ...	30,386	27,864	1,53,201	16,254	111	44,349	273	14,137	3 2 3
*162·36	" " 15th " ...	27,008	24,225	1,83,846	18,148	59	42,468	262	14,306	2 15 2
*162·36	" " 22nd " ...	25,596	20,869	1,76,056	17,932	72	38,873	239	14,107	2 12 1
*162·36	" " 29th " ...	23,575	20,011	1,29,455	16,071	47	36,132	235	13,206	2 14 2
162·36	" " 6th May ...	22,693	19,319	1,35,376	13,674	67	33,060	204	12,886	2 9 0
162·36	" " 13th " ...	22,696	18,603	1,07,331	13,858	73	32,549	200	13,018	2 8 3
162·36	" " 20th " ...	23,474	19,065	2,03,469	17,308	73	37,034	228	13,766	2 14 5
162·36	" " 27th " ...	23,846	19,367	1,96,155	16,241	80	35,688	220	13,736	2 12 10
162·36	" " 3rd June ...	24,327	19,509	1,98,440	18,032	77	37,618	232	13,474	2 13 0
162·36	" " 10th " ...	25,835	19,152	1,48,301	17,579	60	36,800	227	12,786	2 14 1
	Totals up to date ..	559,757	4,69,606	45,70,914	3,76,059	1,930	8,47,595	227	303,912	2 13 7

Abstract of progressive weekly returns of all earnings for 1905 in comparison with 1904—concluded. 1904.

		No. of passengers.	Rs.	Mds.	Rs.	Rs.	Rs.	Rs.	No.	Rate. Rs. A. P.
162·36	First 9 days of Jan. ...	24,246	22,472	1,06,228	12,583	53	35,078	216	16,546	2 1 11
162·36	Week ended 10th " ...	18,106	13,980	97,997	12,017	31	26,708	165	12,769	2 1 6
162·36	" " 23rd " ...	16,210	14,707	1,03,833	11,437	44	26,238	162	12,924	2 0 0
162·36	" " 30th " ...	20,112	18,196	2,06,430	15,841	29	34,066	210	13,068	2 9 9
162·36	" " 6th Feb. ...	20,615	15,244	1,33,164	12,695	31	27,970	173	12,032	2 5 1
162·36	" " 13th " ...	20,310	17,030	1,01,117	13,811	59	30,900	184	14,316	2 3 10
162·36	" " 20th " ...	21,854	19,060	1,40,693	12,816	62	31,938	193	13,747	2 7 4
162·36	" " 27th " ...	22,343	19,667	1,89,996	15,095	43	34,805	214	12,868	2 11 3
162·36	" " 5th Mar. ...	22,770	20,352	1,38,804	10,924	81	31,357	196	13,180	2 6 1
162·36	" " 12th " ...	20,842	25,140	96,548	10,402	54	33,635	207	14,450	2 5 3
162·36	" " 19th " ...	76,857	45,411	87,069	11,912	132	57,455	354	17,390	3 4 10
162·36	" " 26th " ...	35,077	27,544	1,38,050	15,287	101	43,382	264	15,148	2 13 4
162·36	" " 2nd April ...	23,736	26,822	1,71,823	17,010	76	43,908	270	13,743	3 3 1
162·36	" " 9th " ...	24,112	25,150	1,01,971	12,556	77	37,915	233	13,399	2 11 6
162·36	" " 16th " ...	20,630	22,470	99,823	12,581	60	35,129	216	13,493	2 9 8
162·36	" " 23rd " ...	23,174	21,732	1,17,966	13,838	58	35,628	220	13,418	2 10 6
162·36	" " 30th " ...	25,303	21,849	1,20,625	13,355	72	35,276	217	13,719	2 9 2
162·36	" " 7th May ...	23,536	21,206	1,08,413	11,100	57	32,363	200	12 988	2 7 11
162·36	" " 14th " ...	25,619	21,097	1,10,319	11,606	53	32,755	202	13,553	2 9 9
162·36	" " 21st " ...	25,414	20,601	1,53,081	13,384	73	39,941	246	14,110	2 13 4
162·36	" " 28th " ...	23,736	19,243	2,05,353	17,468	44	36,755	226	13,301	2 12 3
162·36	" " 4th June ...	24,417	22,638	81,643	10,416	60	33,114	204	13,966	2 8 0
162·36	" " 11th " ...	20,136	19,571	1,06,780	13,173	39	31,783	196	13,258	2 6 4
	Totals up to date ...	596,227	5,05,350	31,23,650	2,99,143	1,387	8,05,890	213	314,176	2 9 0

* Audited figures.

SOUTH BEHAR RAILWAY.

Approximate Return of Traffic for week ended 10th June 1905 on 78·76 miles open.

	Coaching Traffic.		Merchandise and Mineral Traffic.		Other earnings (estimated).	Total earnings.	Traffic train-miles run.		
	Number of passengers.	Coaching receipts.	Weight carried.	Receipts.			Coaching.	Merchandise.	Total.
		Rs. A. P.	Mds. s.	Rs. A. P.	Rs. A. P.	Rs. A. P.			
Total traffic for the week	16,795	(a)7,940 0 0	35,154 0	4,345 0 0	37 0 0	12,312 0 0	1,928	1,979	3,907
Or per mile of railway	...	100 13 0	.. ..	55 2 8	0 5 6	156 5 2	.... ..	.. ....	.....
For previous 22 weeks of half-year	316,163*	1,51,966 0 0*	13,55,723 0†	82,507 0 0†	847 0 0‡	2,35,320 0 0	39,630§	31,747§	71,377
Total for 23 weeks ...	334,958	1,59,906 0 0	14,10,877 0	86,852 0 0	874 0 0	2,47,632 0 0	41,558	33,126	74,684
Comparison.									
Total for corresponding week of previous year.	21,976	13,231 10 3	1,16,093 0	3,647 8 0	33 15 0	16,913 1 3	1,732	1,655	3,387
Per mile of railway corresponding week of previous year.	.....	168 4 10	.....	46 5 0	0 6 11	202 0 9	.....	.....	.....
Total for corresponding 23½ weeks of previous year.	349,409	1,63,835 11 7	21,53,691 10	1,13,475 7 0	805 14 8	2,78,117 0 10	38,892	28,084	66,476

(a) The decrease is due to greater movement of pilgrims in 1904.
* Added No. of passengers 215 and deducted Rs. 783 } On account of difference between the approximate and audited figures for the week ended
† Do. Mds. 5,911 and ditto ,, 324 } 29th April 1905.
‡ Deducted ,, 15
§ Audited figures up to 29th April 1905.

1905. *Abstract of progressive weekly returns of all earnings for 1905 in comparison with 1904.*

Open mileage.	Period.	Coaching Traffic.		Merchandise and Mineral Traffic.		Other earnings.	Total.	Per mile of railway.	Train mileage.	
		No. of Passengers.	Rs.	Mds	Rs.	Rs.	Rs.	Rs.	No.	Rate. Rs A. P.
*78·76	Week ended 7th Jan. ...	14,157	6,998	55,900	2,649	14	9,659	123	3,471	2 12 6
*78·76	,, ,, 14th ,, ...	12,404	5,946	62,910	3,823	33	9,802	124	3,306	2 15 6
*78·76	,, ,, 21st ,, ...	12,296	6,123	58,457	2,850	13	8,986	114	3,306	2 11 6
*78·76	,, ,, 28th ,, ...	12,209	6,080	56,307	2,875	25	8,940	114	3,327	2 12 4
*78·76	,, ,, 4th Feb. ...	12,442	6,170	40,046	3,864	35	10,077	128	3,415	2 15 2
*78·76	,, ,, 11th ,, ...	12,709	6,498	61,484	3,007	33	9,538	121	3,768	2 8 6
*78·76	,, ,, 18th ,, ...	15,633	8,449	56,634	3,301	50	11,800	150	3,287	3 9 5
*78·76	,, ,, 25th ,, ...	16,050	8,427	55,824	3,539	50	12,016	153	3,099	3 14 0
*78·76	,, ,, 4th March ...	17,079	8,484	61,076	3,359	49	11,832	150	3,304	3 5 11
*78·76	,, ,, 11th ,, ...	15,373	7,319	53,198	3,342	53	10,713	136	3,149	3 6 5
*78·76	,, ,, 18th ,, ...	13,657	7,431	44,127	3,176	41	10,608	135	2,817	3 10 9
*78·76	,, ,, 25th ,, ...	15,214	8,006	61,360	4,336	33	12,374	157	3,089	4 2 5
*78·76	,, ,, 1st April ...	15,195	8,003	50,189	3,619	45	11,667	148	3,277	3 9 0
*78·76	,, ,, 8th ,, ...	15,365	7,685	1,37,310	5,344	54	13,083	164	3,357	3 10 4
*78·76	,, ,, 15th ,, ...	13,818	6,305	71,509	4,493	34	10,832	138	3,309	3 4 5
*78·76	,, ,, 22nd ,, ...	14,388	6,719	78,556	4,903	45	11,727	149	3,308	3 8 9
*78·76	,, ,, 29th ,, ...	13,006	5,441	83,978	4,513	32	9,986	127	3,309	3 0 4
78·76	,, ,, 6th May ...	14,291	6,341	61,956	3,990	43	10,381	132	3,365	3 1 1
78·76	,, ,, 13th ,, ...	14,681	6,512	48,679	3,337	42	9,891	126	3,306	2 15 10
78·76	,, ,, 20th ,, ...	14,714	6,449	50,050	3,640	42	10,141	129	3,306	3 1 1
78·76	,, ,, 27th ,, ...	14,666	6,184	53,319	4,316	29	10,529	134	3,306	3 2 11
78·76	,, ,, 3rd June ...	15,803	6,661	59,294	4,325	32	10,918	139	3,325	3 6 1
78·76	,, ,, 10th ,, ...	16,795	7,940	55,154	4,345	37	12,312	156	3,907	3 11 7
	Totals up to date ...	334,958	1,59,906	14,10,877	86,852	874	2,47,632	137	74,684	3 5 1

Abstract of progressive weekly returns of all earnings for 1905 in comparison with 1904—concluded. *1904.*

		No. of Passengers.	Rs.	Mds.	Rs.	Rs.	Rs.	Rs.	No.	Rate. Rs. A. P.
78·76	First 9 days of Jan. ...	15,823	7,103	33,119	4,692	36	11,831	150	3,290	3 9 5
78·76	Week ended 16th ,, ...	11,526	5,312	46,913	3,657	24	8,973	114	3,363	2 12 9
78·76	,, ,, 23rd ,, ...	13,408	6,359	94,657	4,759	17	11,135	142	3,699	4 4 8
78·76	,, ,, 30th ,, ...	13,814	6,349	56,738	4,101	28	10,378	132	3,786	3 12 2
78·76	,, ,, 6th Feb. ...	12,668	6,536	59,901	4,140	35	10,711	136	3,931	3 10 5
78·76	,, ,, 13th ,, ...	13,563	6,915	60,523	4,119	24	11,058	140	3,756	4 0 3
78·76	,, ,, 20th ,, ...	14,432	7,977	1,13,061	5,831	37	11,735	149	3,993	3 14 9
78·76	,, ,, 27th ,, ...	13,874	7,536	65,466	4,173	44	11,754	149	3,676	4 6 3
78·76	,, ,, 6th March ...	13,104	7,238	60,688	4,061	76	11,369	144	3,998	3 13 10
78·76	,, ,, 13th ,, ...	15,993	7,841	1,57,237	7,136	80	14,717	187	3,250	4 8 11
78·76	,, ,, 19th ,, ...	14,054	7,080	94,571	5,181	46	12,273	156	3,157	3 14 2
78·76	,, ,, 20th ,, ...	13,442	6,313	1,02,182	5,776	37	12,116	154	3,835	4 4 5
78·76	,, ,, 2nd April ...	11,482	5,533	73,774	5,161	21	10,746	136	2,936	3 12 8
78·76	,, ,, 9th ,, ...	13,683	5,812	85,899	6,935	28	12,780	162	3,835	4 8 2
78·76	,, ,, 16th ,, ...	14,096	6,178	87,502	6,090	47	12,310	156	2,914	4 4 3
78·76	,, ,, 23rd ,, ...	14,478	6,312	60,931	4,344	33	10,689	135	2,677	3 15 6
78·76	,, ,, 30th ,, ...	15,012	6,734	86,374	5,699	39	12,472	158	3,150	3 15 4
78·76	,, ,, 7th May ...	13,469	9,377	63,309	4,581	60	13,918	177	3,760	3 0 8
78·76	,, ,, 14th ,, ...	15,556	6,880	84,647	4,516	33	11,429	145	2,677	4 4 4
78·76	,, ,, 21st ,, ...	13,996	6,379	3,66,888	8,379	22	14,780	188	2,914	5 1 2
78·76	,, ,, 28th ,, ...	15,359	6,708	73,773	4,660	25	11,393	145	2,914	3 14 7
78·76	,, ,, 4th June ...	25,030	9,243	76,923	4,304	35	13,573	174	2,835	4 13 2
78·76	,, ,, 11th ,,	21,976	13,232	1,16,093	3,647	34	16,913	208	3,387	4 11 5
	Totals up to date	319,409	1,63,696	21,53,691	1,13,475	806	2,78,117	163	66,476	4 3 11

* Audited figures.

EASTERN BENGAL STATE RAILWAY SYSTEM.

(INCLUDING B.-S. B., R. M. B. AND R.-K. L. RAILWAYS.)

Approximate Return of Traffic and Mileage for the week ended 10th June 1905 on 1,061 miles open.

	Coaching Traffic.		Merchandise and Mineral Traffic.		Other earnings (including steam-boat).	Total earnings.	Traffic Train-miles run.		
	No. of passengers.	Coaching receipts.	Weight carried.	Receipts.			Coaching.	Merchandise.	Total.
		Rs. A. P.	Mds. s.	Rs. A. P.	Rs. A. P.	Rs. A. P.			
Total traffic for the week ...	367,230	1,45,610 0 0	7,96,270 0	1,03,140 0 0	10,639 0 0	2,59,390 0 0	46,397	30,033	76,430
Or per mile of railway	346	137 0 0	750 0	97 0 0	1 0 0*	235 0 0*	...	...	...
For previous 22 weeks of half-year†	6,232,069	29,54,985 0 0	2,47,00,287 0	29,76,727 0 0	4,34,304 0 0	63,96,016 0 0	1,007,769	739,169	1,746,938
Total for 23 weeks ...	6,599,299	31,40,595 0 0	2,55,56,557 0	30,79,867 0 0	4,34,934 0 0	66,55,396 0 0	1,054,166	769,202	1,823,368
COMPARISON.									
Total for corresponding week of previous year	358,078	1,13,215 0 0	7,15,755 0	1,12,200 0 0	9,631 0 0	2,35,046 0 0	43,067	34,327	77,394
Per mile of railway corresponding week of previous year (957 miles)	376	118 0 0	748 0	117 0 0	1 0 0	236 0 0	...	...	...
Total to corresponding date of previous year	6,247,947	30,62,393 0 0	2,57,46,921 0	36,72,886 0 0	5,11,943 0 0	72,67,121 0 0	959,234	938,614	1,897,898

* Excluding ferry earnings, Rs. 9,930.
† Audited up to week ending 15th April 1905.

DACCA STATE RAILWAY.

Approximate Return of Traffic and Mileage for the week ended 10th June 1905 on 86 miles open.

	Coaching Traffic.		Merchandise and Mineral Traffic.		Other earnings.	Total earnings.	Traffic Train-miles run.		
	No. of passengers.	Coaching receipts.	Weight carried.	Receipts.			Coaching.	Merchandise.	Total.
		Rs. A. P.	Mds. s.	Rs. A. P.	Rs. A. P.	Rs. A. P.			
Total traffic for the week ...	31,170	8,590 0 0	15,440 0	1,280 0 0	70 0 0	9,940 0 0	3,410	1,030	4,440
Or per mile of railway ...	362	100 0 0	180 0	15 0 0	1 0 0	116 0 0	...	...	...
For previous 22 weeks of half-year*	645,203	1,88,066 0 0	7,02,110 0	55,356 0 0	5,015 0 0	2,48,437 0 0	68,072	26,566	94,638
Total for 23 weeks ...	676,373	1,96,656 0 0	7,17,550 0	56,636 0 0	5,085 0 0	2,58,377 0 0	71,482	27,596	99,078
COMPARISON.									
Total for corresponding week of previous year	27,362	7,257 0 0	14,985 0	1,688 0 0	44 0 0	8,988 0 0	3,278	1,030	4,308
Per mile of railway corresponding week of previous year ...	317	84 0 0	174 0	20 0 0	1 0 0	105 0 0	...	...	...
Total to corresponding date of previous year	693,422	2,01,607 0 0	16,67,580 0	71,535 0 0	5,363 0 0	2,78,556 0 0	68,745	39,096	107,841

* Audited up to week ending 15th April 1905.

COOCH BEHAR STATE RAILWAY.

Approximate Return of Traffic and Mileage for the week ended 10th June 1905 on 33·6 miles open.

	Coaching Traffic.		Merchandise and Mineral Traffic.		Other earnings (including ferry).	Total earnings.	Traffic Train-miles run.		
	No. of passengers.	Coaching receipts.	Weight carried.	Receipts.			Coaching.	Merchandise.	Total.
		Rs. A. P.	Mds. s.	Rs. A. P.	Rs. A. P.	Rs. A. P.			
Total traffic for the week ...	3,720	1,230 0 0	9,840 0	930 0 0	.....	2,260 0 0	494	(a)638	1,052
Or per mile of railway ...	111	40 0 0	293 0	27 0 0	... ...	67 0 0	...	...	...
For previous 22 weeks of half-year*	71,488	30,179 0 0	10,95,762 0	35,252 0 0	248 0 0	65,679 0 0	10,103	33,572	43,675
Total for 23 weeks ...	75,168	31,509 0 0	10,95,602 0	36,182 0 0	248 0 0	67,939 0 0	10,523	34,104	44,627
COMPARISON.									
Total for corresponding week of previous year	2,487	993 0 0	13,002 0	799 0 0	10 0 0	1,802 0 0	455	911	1,366
Per mile of railway corresponding week of previous year ...	74	30 0 0	387 0	24 0 0	.....	54 0 0	...	...	...
Total to corresponding date of previous year	73,929	28,406 0 0	13,40,230 0	41,125 0 0	311 0 0	69,842 0 0	10,649	37,877	48,526

(a) Ballast train-miles 200.
* Audited up to week ending 15th April 1905.

MYMENSINGH-JAGANNATHGANJ RAILWAY.

Approximate Return of Traffic and Mileage for the week ended 10th June 1905 on 51·37 miles open.

	Coaching Traffic.		Merchandise and Mineral Traffic		Other earnings (including ferry).	Total earnings.	Traffic Train-miles run.		
	No. of passengers.	Coaching receipts.	Weight carried.	Receipts.			Coaching.	Merchandise.	Total.
		Rs. A. P.	Mds. s.	Rs. A. P.	Rs. A. P.	Rs. A. P.			
Total traffic for the week ...	6,780	2,410 0 0	6,510 0	340 0 0	10 0 0	2,760 0 0	1,191	237	1,428
Or per mile of railway ...	161	47 0 0	127 0	7 0 0	...	54 0 0	..	...	..
For previous 23 weeks of half-year*	187,585	56,231 0 0	3,18,892 0	15,017 0 0	295 0 0	72,423 0 0	24,313	7,601	31,914
Total for 29 weeks ...	195,365	58,691 0 0	3,25,402 0	15,357 0 0	305 0 0	75,253 0 0	25,504	7,838	33,342
Comparison.									
Total for corresponding week of previous year	8,428	2,942 0 0	8,407 0	384 0 0	7 0 0	2,635 0 0	1,261	167	1,428
Per mile of railway corresponding week of previous year ...	159	43 0 0	159 0	7 0 0	...	50 0 0	...	...	..
Total to corresponding date of previous year	239,347	67,093 0 0	4,31,609 0	22,423 0 0	516 0 0	90,031 0 0	25,621	11,716	37,337

* Audited up to week ending 15th April 1905.

BENGAL CENTRAL RAILWAY COMPANY, LIMITED.

Approximate Return of Traffic and Mileage for the week ended 10th June 1905 on 139 miles open.

	Coaching Traffic.		Merchandise and Mineral Traffic.		Other earnings.	Total earnings.	Traffic Train-miles run.		
	Number of passengers.	Coaching receipts.	Weight carried.	Receipts.			Coaching.	Merchandise.	Total.
		Rs. A. P.	Mds. s.	Rs. A. P.	Rs. A. P.	Rs. A. P.			
Total traffic for the week ...	52,174	19,646 0 0	46,063 0	3,636 0 0	223 0 0	23,504 0 0	4,068	3,912	8,000
Or per mile of railway	401	151 0 0†	351 0	28 0 0	2 0 0	179 0 0	.....	.....	.....
For previous 28 weeks of half-year*	889,546	3,45,139 0 0	16,19,218 0	1,27,207 0 0	80,407 0 0	5,52,753 0 0	102,871	61,989	164,860
Total for 33 weeks ...	941,720	3,64,785 0 0	16,65,281 0	1,30,843 0 0	80,629 0 0	5,76,257 0 0	106,939	65,901	172,860
Comparison.									
Total for corresponding week of previous year	35,897	14,757 0 0	49,937 0	4,409 0 0	210 0 0	19,385 0 0	5,229	1,995	7,224
Per mile of railway corresponding week of previous year ...	273	114 0 0†	359 0	32 0 0	2 0 0	148 0 0	.....	.....	.....
Total to corresponding date of previous year	929,000	3,61,322 0 0	20,85,473 0	1,50,402 0 0	66,150 0 0	5,77,904 0 0	113,371	58,083	171,454

* Audited up to week ended 22nd April 1905.
† Coaching traffic calculated on 130 miles only.

BENGAL AND NORTH-WESTERN RAILWAY.

Approximate Return of Traffic for the week ending 10th June 1905 on 1,467 miles open

	Coaching Traffic.		Merchandise and Mineral Traffic.		Other earnings (estimated), including steam-boat.	Total earnings.	Traffic Train-miles run.		
	No. of passengers.	Receipts.	Weight carried.	Receipts.			Coaching.	Merchandise.	Total.
		Rs	Mds.	Rs.	Rs.	Rs.			
Total traffic for the week on 1,467 miles open	358,300	(a) 1,33,730	9,58,200	(b) 1,14,240	(c) 21,190	2,69,160	41,643	(d) 42,696	84,339
Or per mile of railway ...	242·88	91·16	653·17	77·87	14·45	183·48	.....	... ..	.....
For previous 28 weeks of half-year (e)	5,634,192	23,23,234	2,34,18,462	29,52,128	4,49,360	57,44,728	936,675	947,200	1,883,875
Total for 33 weeks ...	5,990,492	24,56,964	2,43,76,662	30,66,368	4,70,550	60,13,888	978,318	989,906	1,968,214
Comparison.									
Total for corresponding week of previous year on 1,388 miles open	373,370*	1,04,378	11,87,103	1,58,569	28,117	2 91,394	39 703	(f) 47,691	87,469
Per mile of railway corresponding week of previous year	196·23	75·44	855·26	114 24	20·26	209·94	.....	...	.....
Total to corresponding date of previous year	5,744,919	25,20,326	2,47,93,313	33,20,993	5,59,901	64,20,780	939,673	949,477	1,889,149

(a) Increase mainly under local and foreign outward, principally due to marriage parties.
(b) Foreign outward bookings still continue very slack; foreign inward traffic shows an improvement.
(c) Decrease chiefly under steam-boats, due to reduced foreign outward traffic referred to above.
(d) Includes 6,120 miles of ballast trains.
(e) Includes audited figures up to week ending 29th April 1905.
(f) Includes 8,843 miles of ballast trains.

BENGAL AND NORTH-WESTERN RAILWAY.

Approximate Return of Traffic for the week ending 17th June 1905 on 1,467 miles open.

	Coaching Traffic.		Merchandise and Mineral Traffic.		Other earnings (estimated), including steam-boat.	Total earnings.	Traffic Train-miles run.		
	Number of passengers.	Receipts.	Weight carried.	Receipts.			Coaching.	Merchandise.	Total.
		Rs.	Mds.	Rs.	Rs.	Rs.			
Total traffic for the week on 1,467 miles open	375,660	(a)1,40,360	9,20,930	(b)1,09,120	(c)18,950	2,68,430	41,795	(d)39,201	80,996
Or per mile of railway ...	256·07	95·68	627·76	74·38	12·92	182·98	.....	.....	.....
For previous 23 weeks of half-year (e)	5,971,491	24,52,252	2,44,33,387	30,60,999	4,90,085	60,03,336	979,544	990,532	1,970,076
Total for 24 weeks ...	6,347,151	25,92,612	2,53,54,317	31,70,119	5,09,035	62,71,766	1,021,339	1,029,733	2,051,072
Comparison.									
Total for corresponding week of previous year on 1,388 miles open	274,534	1,03,739	10,46,336	1,25,343	22,656	2,51,728	40,700	(f)40,936	81,636
Per mile of corresponding week of previous year	197·79	74·74	753·84	90·30	16·32	181·36	.....	.....	.....
Total to corresponding date of previous year	6,019,453	26,43,005	2,58,39,664	34,46,286	5,82,557	66,71,908	980,372	990,413	1,970,785

(a) Brisker traffic.
(b) Foreign outward traffic still very slack, foreign inward traffic shows a slight increase.
(c) Decrease chiefly under steam-boats due to reduced foreign outward traffic referred to above.
(d) Includes 6,736 miles of ballast trains.
(e) Ditto audited figures up to week ending 6th May 1905.
(f) Ditto 4,867 miles of ballast trains.

ASSAM-BENGAL RAILWAY.

Approximate Return of traffic for the week ended 10th June 1905 on 737 miles open for all descriptions of traffic, and an additional 3 miles for goods traffic only.

	Coaching Traffic.		Merchandise and Mineral Traffic.		Other earnings (estimated), including steam-boat.	Total earnings.	Traffic Train-miles run.		
	No. of passengers.	Coaching receipts.	Weight carried.	Receipts.			Coaching.	Merchandise.	Total.
		Rs. A. P.	Mds. S.	Rs. A. P.	Rs. A. P.	Rs. A. P.			
Total traffic for the week ...	41,324	25,136 0 0	1,38,616 0	23,551 0 0	1,590 0 0	50,277 0 0	10,194	14,766	24,960
Or per mile of railway	56·07	34·11	187·32	31·83	2·15	68·09	13·83	19·95	33·78
For previous 23 weeks of half-year	1,047,183	6,91,760 0 0	37,21,856 0	5,40,673 0 0	58,679 0 0	12,91,112 0 0	233,010	337,862	569,878
Total for 23 weeks ...	1,088,507	7,16,896 0 0	38,60,452 0	5,64,224 0 0	60,269 0 0	13,41,389 0 0	243,204	342,628	585,832
Comparison.									
Total for corresponding week of previous year	37,435	20,439 0 0	1,31,645 0	25,794 0 0	2,572 0 0	48,805 0 0	6,645	12,529	19,174
Per mile of railway corresponding week of previous year ...	50·79	27·73	177·90	34·86	3·48	66·07	9·02	16·93	25·95
Total to corresponding date of previous year	1,003,457	6,33,475 0 0	31,62,908 0	4,66,552 0 0	65,532 0 0	11,65,559 0 0	195,670	241,803	437,473

FINANCIAL YEAR.

Approximate Statement of Gross Receipts of the Assam-Bengal Railway.

Receipts for week ending 10th June 1905.			Receipts for week ending 11th June 1904.			Total receipts from 1st April 1905 to 10th June 1905.			Total receipts from 1st April 1904 to 11th June 1904.			Total increase in 1905.	Total decrease in 1905.
Mean mileage worked.	Receipts.	Per mile worked	Mean mileage worked.	Receipts.	Per mile worked.	Mean mileage worked.	Total receipts.	Per mile worked per week.	Mean mileage worked	Total receipts.	Per mile worked per week.		
	Rs.	Rs.		Rs.	Rs.		Rs.			Rs.		Rs.	
740	50,277	68·09	740	46,805	68·07	740	5,60,682	...	740	4,34,651	...	1,26,031	.....

DARJEELING-HIMALAYAN RAILWAY COMPANY, LIMITED.

		Rs.	A.	P.	Rs.	A.	P.
Approximate earnings for the week ending 17th June 1905	Coaching ...	10,490	0	0			
	Goods ...	12,855	0	0	23,427	0	0
	Other earnings ...	82	0	0			
Audited earnings for the corresponding period of 1904	Coaching ...	10,251	0	0			
	Goods ...	11,337	0	0	21,747	0	0
	Other earnings ...	159	0	0			
	Increase ...				1,680	0	0
Receipts per mile for the week ending 17th June 1905					457	5	8
Ditto for the corresponding period of 1904					426	6	7
	Increase ...				30	15	1
Receipts from 1st January to 17th June 1905					4,36,224	0	0
Ditto for the corresponding period of 1904					4,72,876	0	0
	Decrease ...				36,652	0	0

Printed at the Printing Office, and published by the Book Depôt, of the Bengal Secretariat, Writers' Buildings, in the City of Calcutta on 28th June 1905.

APPENDIX TO

The Calcutta Gazette.

WEDNESDAY, JUNE 28TH, 1905.

FIRST QUARTER.

BENGAL LIBRARY CATALOGUE OF BOOKS.

FOR THE

First Quarter ending 31st March 1905.

1	2	3	4	5
Serial number.	Registration number.	Title, with an English translation of the same when not in that language, the language of the book, and the subject.	Name of author, translator, or editor of the book, or any part of it.	Place of printing and publication.
		UNI-LINGUAL BOOKS.		
		ARABIC BOOKS.		
		RELIGION.		
1	292	Doá-i-sharíph. Sacred Prayers ...	Sekh Abdullá	92, Harrison Road, Calcutta ...
2	294	Albarúq-ul-lámiyá. Flash of Light ...	Ditto	Ditto ditto ...
		ASSAMESE BOOKS.		
		DRAMA.		
1	304	Asamíyá Bháshár Subhadráharana Nátak. Drama about the Abduction of Subhadrá in Assamese.	Karak Náth Gagai	14, Ráma Chandra Maitra's Lane, Calcutta; Uttar Lakhsmípur; Assam.
		LANGUAGE.		
		Educational—		
2	2168	Ákhara Chinákí. Seha Chhová. An Alphabetical Primar. Last Part.	Sraddhá Charan Chaudhurí ...	6, College Square, Calcutta ... ...
3	2169	Sachitra Lará Sikshá. Agachhová. Instruction for Children with Illustrations. First Part.	Pánindra Náth Gagai	6, College Square, Calcutta; Dibrugar, Assam.
		POETRY.		
		Educational—		
4	332	Kávitá Kusum. Flower of Poetry ...	Pramod Chandra Badathákur ...	Ditto ditto .
5	373	Kavitá Puthi. Agachhová. Book of Poems. First Part.	Mahammad Solemán Khán ...	Ditto ditto ...
		RELIGION.		
6	31	Kírttan Ghoshá. Chanting of *Kirttan* Songs.	Sankar Dev, Madhav Dev and Srídnar Kandali.	Ditto ditto ...
		SCIENCE (MATHEMATICAL).		
		Educational—		
7	2165	Padhásálír Asamíyá Pátíganit. Arithmetic for Schools in Assamese.	Siva Náth Bhattácháryya ...	Ditto ditto ...
8	2166	Sisu Ganit. Arithmetic for Children ...	Kálináth Hájáriká	6, College Square, Calcutta ... ...
		BENGALI BOOKS.		
		ART.		
1	253	Brahmasangít-Svaralipi. Musical Notation of Songs about Brahma (God).	Kángálí Charan Sen	55, Upper Chitpur Road, Calcutta ...
		Educational—		
2	5	Draing Siksha. Instruction in Drawing. Part I.	Syám Chandra Datta	The Asutosh Press, Dacca ...
		BIOGRAPHY.		
3	223	Vangabháshár Lekhak. Writers of the Bengali Language. Part I.	Hari Mohan Mukherji	38-2, Bhavání Charan Datta's Street, Calcutta.
4	260	Sákyamuni Charit O Parisishta. Life of Sákyamuni and an Appendix. Part II.	Sádhu Aghor Náth	8, Ramá Náth Majumdár's Street, Calcutta.
5	264	Áchárya Kesav Chandra. Kesav Chandra the Religious Preceptor. Part III.	Rev. Gaur Govinda Ráy	Ditto ditto ... ...
6	54	Pratáp Sinha. (Life of) Pratáp Sinha ...	Satís Chandra Mitra	3-4, Gaur Mohan Mukherji's Street; 67, College Street; Calcutta.
7	2112	Panditá Ramá Báiyer Vivaran. An Account of Panditá Ramá Bái.	Miss S. E. Billing	41, Lower Circular Road; 23, Chowringhi Road; Calcutta.
		DRAMA.		
8	1	Párvatí. The Goddess Durgá	Pyárí Mohan Chaudhurí ...	The Suhrid press, Mymensing ...
9	5	Asat Karmer Viparít Phal. Adverse Result of Wicked Acts.	Rám Charan De	The Alipur Press; Páthuriyá Pati; Kálighát, Alipur, 24-Parganas.
10	14	Satyanáráyan-Lílá-Gítábhinay. An Opera about the Doings of the God Satyanáráyan.	Dhana Krishna Sen	17, Nanda Kumár Chaudhuri's Lane; 201, Cornwallis Street; Calcutta.
11	28	Rus-Jáp Yuddha. Russo-Japanese War. Part I.	Saradindu Mitra	Jessore ... ...
12	72	Prahlád-Charitra. Life of Prahlád ...	Haripada Chatterji	38, Siva Náráyan Dás's Lane; 201, Cornwallis Street; Calcutta.
13	73	Máyáviní. The Enchantress	Asubodh Vidyábhúshan ...	38, Siva Náráyan Dás's Lane; 2[illegible] Ramá Náth Majumdár's Street; Calcutta.

First Quarter ending 31st March 1905.

6	7	8	9	10	11	12	13
Name or firm of printer and of publisher.	Date of issue from the press or of the publication.	Size and number of sheets, leaves, or pages.	Number of edition and number of copies of which the edition consists.	Printed or (lithog).	Price at which the book is sold to the public	Name and residence of the proprietor of copyright, or any part of it.	Num ber and date of Re gistration of Copyright.
	1905.				Rs. A. P.		
Majid Ali	Jan. 15	Dy. 8vo; 22	1st; 1,000	L.	0 4 0	.....	
Ditto	„ 5	Dy. 8vo; 184	1st; 1,000	L.	...	.....	
Lál Chánd Datta; Lakshmí Náth Baruá.	„ 31	Dy. 12mo; 44	1st; 1,000	P.	0 4 0	.....	
	1904.						
Niváran Chandra Ghosh ...	Dec. 20	Dy. 12mo; 36	3rd; 1,000	P.	0 1 0	.....	
Niváran Chandra Ghosh; Siva Náth Bhattácháryya.	„ 20	Dy. 12mo; 36	20th; 10,000	P.	0 1 6	.....	
	1905.						
N. C. Ghosh; the author ...	Feb. 8	D.fc. 16mo; 31	4th; 4,000	P.	0 2 6	.....	
N. C. Ghosh; Siva Náth Bhattácháryya.	Mar. 1	D.fc. 16mo; 42	3rd; 5,000	P.	0 2 6	.....	
	1904.						
N. C. Ghosh; Siva Náth Bhattácháryya and Ganesrám Agarválá.	Dec. 20	Dy. 12mo; 182	6th; 2,000	P.	...	.....	
Niváran Chandra Ghosh; the author	„ 20	Dy. 12mo; 196	6th; 3,000	P.	0 6 0	.....	
N. C. Ghosh	„ 20	Dy. 12mo; 60	New; 1,000	P.	0 2 0	.....	
	1905.						
Devendra Náth Bhattácháryya ...	Jan. 14	Rl. 8vo; 245	1st; 50	P.	2 8 0	.....	
	1904						
Revatí Mohan Dás; Hariram Dhar.	Dec. 15	Dy. 8vo; 40	1st; 4,000	P.	0 3 0	.....	
Nut Vihárí Ráy	Aug. 17	Rl. 8vo; 1008	1st; 4,000	P.	4 0 0	.....	
	1905.						
K. P. Náth	Jan. 24	Dy. 12mo; 144	3rd; 500	P.	0 10 0	.....	
Ditto	„ 21	Dy. 8vo; 154	1st; 500	P.	1 0 0	.....	
	1904						
Mukherji and Chatterji; The Students' Library.	Dec. 20	D.Cr. 16mo; 84	1st; 1,000	P.	0 6 0	.....	
Rev. Percy Knight; The Calcutta Tract and Bible Society.	Nov. 29	Cr. 8vo; 74	1st; 1,000	P.	0 1 6	.....	
	1905.						
Rajaní Kánta Pandit ...	Jan. 15	Dy 12mo; 92	1st; 1,000	P.	0 8 0	.....	
Girís Chandra Ráy; Ráj Kumár De	„ 30	Dy. 12mo; 25	1st; 1,000	P.	0 2 0	.....	
	1904.						
Sarat Chandra Chakravartí; Gurudás Chatterji.	Dec. 12	Dy. 8vo; 168	1st; 1,000	P.	1 4 0	.....	
Káli Prasanna Chatterji ...	„ 24	Dy. 12mo; 17	1st; 1,000	P.	0 2 0	The author, Jessore.	
Báburám Chaudhurí; Gurudás Chatterji.	„ 15	Dy. 12mo; 214	1st; 1,000	P.	1 4 0	.....	
Báburám Chaudhurí; the author ...	„ 19	Dy. 12mo; 294	1st; 500	P.	1 8 0	.....	

1 Serial number.	2 Registration number.	3 Title, with an English translation of the same when not in that language, the language of the book, and the subject.	4 Name of author, translator, or editor of the book, or any part of it.	5 Place of printing and publication.
		***BENGALI BOOKS*—contd.**		
		Drama—concld.		
14	74	Gauri-Milan. Union of Gauri (Goddess Durgá).	Veni Mádhava Chatterji ...	38, Siva Náráyan Dás's Lane; 21, Cornwallis Street; Calcutta.
15	75	Parámukti Vá Rádhikár Golok-Milan. The Highest Form of Salvation or the Union of Rádhiká at Golok.	Ditto ditto ...	38, Siva Náráyan Dás's Lane; 201, Cornwallis Street; Calcutta.
16	83	Lakshman-Varjjan Vá Ráma Lila Avasán. Abandonment of Lakshman or the End of the Sports of Ráma.	Hárádhan Ráy	Ditto ditto ...
17	100	Sabhyatá. Civilization	Satis Chandra Banerji	63, Nimtalá Ghát Street; 74, Serpentine Lane; Calcutta.
18	180	Premer Páthár. The Ocean of Love ...	Nityabodh Vidyávinod	2, Goábágán Street; 93, Mániktalá Street; Calcutta.
19	194	Paritosh. (A Name)	Surendra Nath Basu	79, Amherst Street; 66, Bechu Chatterji's Street; Calcutta.
20	L. No. 239	Vesyár Chheler Annaprásan. The Rice-eating Ceremony of a Prostitute's, child.	Párvati Charan Bhattácháryya ...	336; 333; Upper Chitpur Road, Calcutta.
21	204	Ráná Pratáp. (A Name)	Framatha Náth Sarkár ...	45, Benetolá Lane; 54, College Street; Calcutta.
22	240	Alibábá. (A Name)	Kshirod Prasád Vidyávinod ...	28, Beadon Row; 201, Cornwallis Street; Calcutta.
23	303	Videsí. Foreigner	Rám Lál Banerji	17, Nanda Kumár Chaudhuri's 2nd Lane; 201, Cornwallis Street; Calcutta.
24	312	Aindrilá. (A Name)	Manomohan Ráy	29, Masjidbári Street; 201, Cornwallis Street; Calcutta.
25	326	Konta Ke? Which is Which? ...	Nagendra Náth Ghosh	12, Vindu Pálit's Lane, Calcutta ...
26	370	Abhimanyu Badh. Slaying of Abhimanyu	Mati Lál Ghosh	81, College Street; 201, Cornwallis Street; Calcutta.
27	374	Chokher Nesá. Intoxication of the Eye ...	Anubodh Vidyábhúshan ...	38, Sivanáráyan Dás's Lane; 2, Ramá Nath Majumdár's Street; Calcutta.
28	448	Sávitri. (A Name)	Kshirod Prasád Vidyávinod ...	28, Beadon Row; 201, Cornwallis Street; Calcutta.
		Fiction.		
29	9	Vásanti. (A Name)	Byomakes Chatterji	32, Sukeas' Street, Calcutta; Kantalpára, Nalhati, 24-Parganas.
30	40	Sobhaná. (A Name)	Surendra Náth Banerji ...	3-4, Gaur Mohan Mukherji's Street; 217, Cornwallis Street, Calcutta.
31	70	Bhishan Pratisodh. Fearful Revenge ...	Manindra Náth Basu	70, Báránasi Ghosh's, Street; 23-12, Sinha's Bagán, Jorasánko; Calcutta.
32	182	Ekti Vasanta-Práter *Prasphutita* Sakurá-Puspa. One full-blown *Sakurá* Flower of a Spring morn.	Surendra Náth Tagore	25, Ráybágán Street, Calcutta .
33	247	Haridási. (A Name).	Jivan Krishna Mukherji ...	211, Cornwallis Street, Calcutta ...
34	L. No. 239	Hema Chandra. (A Name).	Surendra Mohan Bhattácháryya ...	338, Upper Chitpur Road, Calcutta ...
35	257	Hema-Latá. (A Name)	Rajendra Lál Banerji	63, Nimtalá Ghát Street; 44, Masjidbári Street; Calcutta.
36	286	Naren Bábu Vá Ditektibh Rahasya. Naren Babu or the Mysteries of a Detective.	Avinás Chandra Datta	133, Masjidbári Street; 2, Krishna Dás Pál's Lane; Calcutta.
37	371	Vidhi-Lipi. Writing of Fate	Gangá Charan Pál	2, Goabágán Street; 201, Cornwallis Street; Calcutta.
38	421	Siva-Netrá. (A Name).	Srímati Pramodini Sen	5, Sambhu Chatterji's Street; Calcutta.
39	428	Vilati Dampati. A European Married Couple	Asutosh Mitra	127, Masjidbári Street; Calcutta
40	429	Elávati Vá Mohini Pratimá. Elávati (A Name) or a Charming Image.	Nanda Lál Dás	Ditto ditto ...
41	434	Sachitra Galpa-Pushpánjali. A Palmful of Flowers of Stories with Illustrations. (T).	Dhirendra Nath Pál	Ditto ditto ...
42	439	Kamalá. (A Name)	Haridás Dás	63, Nimtalá Ghát Street, Calcutta; Howrah.
43	440	Kusum Renu. Pollen of Flowers	Nanda Lál Dás	127, Masjidbari Street, Calcutta ...
44	L. No. 239	Tárak Náth Granthávali. Works by one Tárak Náth. Vol. II. No. 7. ...	Táraknáth Visvás	21, Balarám Ghosh's Street; 231, Upper Chitpur Road; Calcutta.
45	,,	Ditto ditto. Vol. II. No. 8 .	Ditto ditto	Ditto ditto ...
46	,,	Ditto ditto. Vol. II. No. 9 ...	Ditto ditto	Ditto ditto .
47	,,	Ditto ditto. Vol. II. No. 10 ...	Ditto ditto	Ditto ditto ...
48	,,	Ditto ditto. Vol. III. No. 5 ...	Ditto ditto	1, Balarám Ghosh's Street, Calcutta ...
49	,,	Ditto ditto. Vol. III. No. 6 ...	Ditto ditto	Ditto ditto ...
50	,,	Ditto ditto. Vol. III. No. 7 ...	Ditto ditto	Ditto ditto ...
51	,,	Ditto ditto. Vol. III. No. 8 ...	Ditto ditto	Ditto ditto ...
52	,,	Ditto ditto. Vol. III. No. 9 ..	Ditto ditto	Ditto ditto ...
53	,,	Ditto ditto. Vol. III. No. 10 ..	Ditto ditto	Ditto ditto ...
54	,,	Ditto ditto. Vol. III. No. 11 ...	Ditto ditto	Ditto dittf ...
55	,,	Ditto ditto. Vol. III. No. 12 ...	Ditto ditto	Ditto ditto ..
56	2182	Ditto ditto. Vol. VI. No. 4 ...	Ditto ditto	21, Balarám Ghosh's Street; 231, Upper Chitpur Road; Calcutta.
57	,,	Ditto ditto. Vol. VI. No. 5 ...	Ditto ditto	Ditto ditto ...
58	,,	Ditto ditto. Vol. VI. No. 6 ...	Ditto ditto	Ditto ditto ..

First Quarter ending 31st March 1905—continued.

6	7	8	9	10	11	12	13
Name or firm of printer and of publisher.	Date of issue from the press or of the publication	Size and number of sheets, leaves, or pages.	Number of edition and number of copies of which the edition consists.	Printed or litho'd.	Price at which the book is sold to the public.	Name and residence of the proprietor of copyright, or any part of it.	Number and date of Registration of Copyright.
	1905.				Rs. A. P.		
Báburám Chaudhurí; Tárá Prasanna Mukherji.	Jan. 1	Dy. 8vo; 124	1st; 1,000	P.	1 4 0	.....	
Báburám Chaudhurí; Gurudás Chatterji.	„ 7	Dy. 8vo; 142	1st; 1,000	P.	1 4 0	.....	
	1904.						
Ditto ditto ...	Dec. 25	Dy. 8vo; 120	1st; 1,000	P.	1 0 0	.....	
	1905.						
Nilamani Dhar; J. C. Dás Gupta...	Jan. 2	Dy. 12mo; 104	1st; 500	P.	0 6 0	.....	
	1904.						
Tárini Charan Ás; Nripendra Chandra Basu.	Dec. 24	Dy. 12mo; 114	1st; 1,000	P.	0 8 0	.....	
Amviká Charan Som, the author ...	„ 24	Dy. 12mo; 147	2nd; 750	P.	0 12 0	.....	
Nilamaní Dhar; N. K. Sil & Co. ...	1905.	Dy. 12mo; 35	1st; ...	P.	0 3 0	.....	
Sasibhúshan Chakravarti; S. K. Láhirí and Co.	Jan. 23	D.cr. 16mo; 131	1st; 500	P.	0 12 0	.....	
J. N. Basu; Guru Dás Chatterji ...	„ 15	Dy. 12mo; 96	5th; 1,000	P.	0 8 0	.....	
Sarat Chandra Chakravati; Gurudás Chatterji.	„ 20	Dy. 12mo; 96	1st; 1,000	P.	0 8 0	.....	
Mukherji and Co.; Gurudás Chatterji.	Feb. 1	Dy. 12mo; 192	1st; 1,000	P.	1 8 0	.....	
Prasád Dás Chakravartí; Hari Charan Dás.	„ 18	Dy. 12mo; 98	1st; 500	P.	0 6 0	.....	
Avinás Chandra Basu; Gurudás Chatterji.	„ 10	Dy. 8vo; 163	1st; 1,000	P.	1 4 0	.....	
Baburám Chaudhurí; Praphulla Chandra Jyotirbhúshan	„ 8	Dy. 12mo; 106	1st; 500	P.	0 8 0	.....	
J. N. Basu; Gurudás Chatterji ...	Mar. 4	Dy. 12mo; 138	2nd; 1,000	P.	0 8 0	.....	
	1904.						
Prabhát Chandra Datta, the author.	Dec. 20	Dy. 12mo; 326	1st; 1,000	P.	1 0 0	.....	
Mukherji and Chatterji; Banerji & Co.	„ 15	Dy. 12mo; 180	1st; 1,000	P.	1 4 0	.....	
	1905.						
N. C. Pál; Pál Brothers & Co. ...	Jan. 8	D.cr. 16mo; 408	2nd; 1,000	P.	1 10 0	.....	
Sányál & Co.	1904. Dec. 27	Rl. 21mo; 224	1st; 1,050	P.	0 12 0	.....	
	1905.						
Kártik Chandra Datta; the Calcutta Temperance Federation.	Jan. 12	Df.c. 16mo; 62	2nd; 1,000	P.	0 1 0	.....	
S. K. Sil; S. K. Sil and N. K. Sil...	...	Dy. 12mo; 289	1st; ...	P.	1 4 0	.....	
Nilamani Dhar; Káli Mohan Bhattácháryya.	1904. Dec. 31	Dy. 12mo; 152	1st; 1,000	P.	1 0 0	.....	
	1905.						
Yogendra Náth Chakravartí; the author.	Feb. 3	Dy. 12mo; 160	1st; 1,500	P.	0 12 0	.....	
Tárini Charan Ás; Gurudás Chatterji.	„ 5	Dy. 12mo; 72	1st; 1,000	P.	0 8 0	.....	
U. Rakshit; Priya Nath Ghosh ...	„ 15	Dy. 8vo; 136	1st; 600	P.	0 12 0	.....	
Dina Nath Mánna; Basak & Sons	„ 20	Dy. 12mo; 24	1st; 1,000	P.	0 4 0	.....	
Ditto Ditto	„ 14	Dy. 12mo; 54	2nd; 1,000	P.	0 8 0	.....	
Ditto Ditto	Feb. 18	Dy. 12mo; 528	2nd; 1,000	P.	3 0 0	.....	
Nilmani Dhar; J. Chatterji ...	„ 15	Dy. 12mo; 232	1st; 1,000	P.	0 12 0	.....	
Dina Náth Mánná; Vaishnav Charan Basák.	„ 20	Dy. 12mo; 108	2nd; 1,000	P.	1 0 0	.....	
Gopál Chandra Láhirí; S. Visvás and Brothers.	.....	Dy. 8vo; 32	1st; ...	P.	0 4 0	.....	
Ditto ditto ...	.....	Dy. 8vo; 32	1st; ...	P.	0 4 0	.....	
Ditto ditto ...	.....	Dy. 8vo; 32	1st; ...	P.	0 4 0	.....	
Ditto ditto ...	.....	Dy. 8vo; 32	1st; ...	P.	0 4 0	.....	
Vipin Vihárí Munsi	.....	Dy. 8vo; 32	1st; ...	P.	0 4 0	.....	
Ditto ditto	.....	Dy. 8vo; 32	1st; ...	P.	0 4 0	.....	
Ditto ditto	.....	Dy. 8vo; 32	1st; ...	P.	0 4 0	.....	
Ditto ditto	.....	Dy. 8vo; 32	1st; ...	P.	0 4 0	.....	
Ditto ditto	.....	Dy. 8vo; 32	1st; ...	P.	0 4 0	.....	
Ditto ditto	.....	Dy. 8vo; 32	1st; ...	P.	0 4 0	.....	
Ditto ditto	.....	Dy. 8vo; 32	1st; ...	P.	0 4 0	.....	
Ditto ditto	.....	Dy. 8vo; 32	1st; ...	P.	0 4 0	.....	
	1904						
K. M. Sinha; S. Visvás and Brothers.	Dec. 12	Dy. 8vo; 32	1st; 1,000	P.	1 8 0 yearly.	.....	
Ditto ditto ...	„ 12	Dy. 8vo, 32	1st; 1,000	P.	.....	.....	
Ditto ditto ...	„ 12	Dy. 8vo; 32	1st; 1,000	P.	.....	.....	

1 Serial number	2 Registration number.	3 Title, with an English translation of the same when not in that language, the language of the book, and the subject.	4 Name of author, translator, or editor of the book, or any part of it.	5 Place of printing and publication.
		BENGALI BOOKS—contd.		
		HISTORY (INCLUDING GEOGRAPHY).		
59	99	Sachitra Duvar Yuddha. The Boer War with Illustrations. Part VIII.	Priya Náth Mukherji	63, Nimtalá Ghát Street; 14, Hujuri Mal's Lane; Calcutta.
		Educational—		
60	14	Prathama Sikshá Bhárat Itihás. Elementary History of India.	Vrindávan Dhar	The Asutosh Press, Dacca ... ...
61	35	Sisuranjan Vángálár Itihas. The History of Bengal for the Entertainment of Children.	Chandra Kisor Vidyánidhi ...	The East Bengal Press, Dacca ...
62	398	Sisu Sikshya Bhúgol Vivaran. Geography intended for Children.	Isán Chandra Ghosh	40, Bechu Chatterji's Street, Calcutta
		LANGUAGE.		
		Educational—		
63	2149	Vijnán-Páth Saral-Bodhiká. An Easy Key to Vijnán Páth.	Atul Chandra Deva Náth ...	183, Masjidbári Street; 29, Canning Street; Calcutta.
64	1	Sisu Vijnán Bodhini. A Key to Sisu Vijnán. Part I.	Sasadhar Sen	The Atia Printing Works, Tangail; 46, Muktárám Babu's Street; Calcutta.
65	7	Padya-Sangraha-Vyákhyá. A Key to Padya Sangraha.	Rajani Chandra Datta	The Hitaishini Press, Brahmanberiyá, Comilla; Sálatáganj, Sylhet.
66	7	Vijnán Páther Vyákhyá. A Key to Vijnán Páth. Part II.	Vámá Charan Das	The Syamantak Press, Dacca ...
67	9	Padyamálá-Saháy. A Key to Padyamálá.	.....	The Isán Press, Dacca; Silchar, Cachar
68	10	Sáhitya Kusum Bodhini. A Key to Sáhitya Kusum.	Sasibhúshan Kávyavinod	The Vaikuntha Nath Press, Dacca ...
69	11	Sáhitya Páth-Bodhini. A Key to Sáhitya Páth.	Ditto ditto	Ditto ditto ...
70	20	Padyamálá-Dipiká. A Key to Padyamálá	Navin Chandra Dás	The Gopinath Press, Dacca ... ...
71	24	Sisubodh-Bodhini. A Key to Sisubodh ...	Kunja Vihári Náth	The Gopinath Press; the Ripon Library; Dacca.
72	25	Sikshá Sopán-Bodhini. A Key to Sikshá Sopán.	Ditto ditto	Ditto ditto ...
73	26	Sikshá Sopán Sikshá. A Key to Sikshá Sopán.	....	The Gopinath Press; 85, Patuyátuli; Dacca.
74	27	Padya Samgraha-Bodhini. A Key to Padya Samgraha.	Gangápati Dás and Sarachchandra Datta.	The Adarsa Press, Dacca; The Cotton Library, Habiganj, Sylhet.
75	28	Vijnánabodh-Bodhini. A Key to Vijnánabodh.	Ditto ditto ...	Ditto ditto ...
76	36	Sisu Vijnán Vikás. A Key to Sisu Vijnán	Giris Chandra Dám	The East Bengal Press, Dacca ...
77	37	Sáhitya Páth Vikás. A Key to Sáhitya Páth.	Ditto	Ditto ditto ...
78	47	Sisu-Sopán. Stepping-Stone to (instruction) for Children. Part III.	Satis Chandra Mukherji, B.A. ...	3-4, Gaur Mohan Mukherji's Street; 25, Cornwallis Street; Calcutta.
79	51	Panch pákhyán. Five Stories	Avinás Chandra Banerji	3-4, Gaur Mohan Mukherji's Street; 65, College Street; Calcutta.
80	82	Niti-Páth. Moral Lessons. Part II ...	Jagadbandhu Modak	46, Bechu Chatterji's Street; 30, Cornwallis Street; Calcutta.
81	83	Hitopades. Good Precepts	Isán Chandra Ghosh, M.A. ...	114, Amherst Street, Calcutta ...
82	95	Sisu Vijnán Bodhini. A Key to Sisu Vijnán.	Niváran Chandra Bhattácháryya ...	14, Amherst Street; 63, College Street; Calcutta.
83	153	Sáhitya Latiká. The Creeper of Literature	Nagendra Kumár Ráy	The Genderiyá Press; Phiringi Bazar M. E. School; Dacca.
84	107	Nútan Sisu Páth. New Lessons for Infants.	Isán Chandra Ghosh, M.A. ...	40, Bechu Chatterji's Street, Calcutta...
85	175	Ditto ditto	Ditto ditto ...	Ditto ditto ...
86	172	Saral Páth. Easy Lessons	Jagadbandhu Modak	46, Bechu Chatterji's Street; 30, Cornwallis Street; Calcutta.
87	191	Sisubodh. Instruction for Children ...	Sarachchandra Chaudhuri ...	25, Ráybágán Street; 65, College Street; Calcutta.
88	215	Prabodh Chandriká. Moonlight of Knowledge.	Mrityunjoy Vidyálankár	33-2, Bhuvání Charan Datta's Street, Calcutta.
89	232	Nimna Prálmári Rídár. Lower Primary Reader. Standards 1 and 2.	Giris Chandra Basu	117-1, Bowbazar Street; 103-3, College Street; Calcutta.
90	267	Saisav Sangi. Companion of Childhood ...	Avinás Chandra Banerji	17, Madan Mitra's Lane; 20, Cornwallis Street; Calcutta.
91	297	Hitopad s-Saral-Bodhiká. An Easy Key to Hitopades.	Atul Chandra Dev Náth	183, Masjidbári Street; 29, Canning Street; Calcutta.
92	323	Sachitra Varna Prichay. An Alphabetical Primer with Illustrations. Part I.	Rámánanda Chatterji	6, College Square, Calcutta ... ...
93	334	Ditto ditto. Part II.	Ditto ditto	Ditto ditto ... ...
94	335	Sachitra Sisu Sikshá. Instruction for Children with Illustrations. Part III.	Madan Mohan Tarkálankár ...	5, Siva Náráyan Dás's Lane; 66, College Street; Calcutta.
95	351	Sangraha Kusum. A collection of Flowers. Part II.	Isvar Chandra Chatterji	108, Bárán si Ghosh's Street; 90, Harrison Road; Calcutta.

First Quarter ending 31st March 1905—continued.

6	7	8	9	10	11	12	13
Name or firm of printer and of publisher	Date of issue from the press or of the publication.	Size and number of sheets, leaves, or pages.	Number of edition and number of copies of which the impression consists.	Printed or lithoed.	Price at which the book is sold to the public.	Name and residence of the proprietor of copyright, or any part of it.	Number and date of Registration of Copyright.
	1905.				Rs. A. P.		
Nílamani Dhar; Upendra Bhúshan Chaudhurí.	Dec. 14	Dy. 12mo; 36	1st; 1,000	P.	.....	.....	
Revatí Mohan Dás	„ 25	Dy. 8vo; 137	Revised; 2,000	P.	0 6 0	.....	
Krishnadás Basák; Umesh Chandra Sen.	1905. Feb. 5	Dy. 12mo; 72	1st; 1,000	P.	0 8 0	.....	
R. Datta	„ 17	D.cr. 16mo; 66	6th; 10,500	P.	0 3 0	.....	
Yogendra Nath Chakravartí; Súryya Kumár Nath.	1904. Dec. 19	Dy. 12mo; 84	1st; 4,000	P.	0 6 0	.....	
R. K. Ráhá; Prasanna Náth Maitra.	1905. Jan. 10	Dy. 12mo; 96	1st; 2,000	P.	0 14 0	Nivárun Chandra Bhattácharyya, 46, Mukterám Babu's Street, Calcutta.	
Sádhu Charan Chanda; Isán Chandra Nág.	„ 4	Dy. 12mo; 72	1st; 1,000	P.	0 4 0	.....	
Munsi Ekábbar; the author ...	„ 1	Dy. 12mo; 108	1st; 1,000	P.	0 2 0	.....	
Mathurá Náth De; The Student's Library.	„ 4	Dy. 12mo; 34	1st; 1,000	P.	0 3 0	.....	
Vihárí Lál, Datta; the Student's Library.	„ 12	Dy. 12mo; 252	1st; 1,000	P.	0 14 0	.....	
Ditto ditto ...	„ 12	Dy. 12mo; 304	1st; 2,000	P.	1 0 0	.....	
Gopínáth Basák; Navín Chandra Dás.	„ 15	Dy. 12mo; 21	1st; 1,000	P.	0 2 0	.....	
Gopínath Basák; Kálí Prasanna Nath.	„ 20	Dy. 12mo; 24	1st; 2,000	P.	0 3 0	.....	
Gopínath Basák; Jánakí Náth Náth.	„ 20	Dy. 12mo; 24	9th; 2,000	P.	0 3 0	.....	
Gopí Nath Basák; The Asutosh Library.	„ 20	Dy. 12mo; 31	3rd; 1,000	P.	0 4 0	.....	
Bipreswar Chakravartí; Sarach-Chandra Datta.	„ 9	Dy. 12mo; 92	1st; 2,000	P.	0 8 0	.....	
Ditto ditto ...	„ 12	Dy. 12mo; 108	1st; 2,000	P.	0 9 0	.....	
Krishna Dás Basák; Umes Chandra Sen.	Feb. 14	Dy. 12mo; 144	1st; 1,000	P.	0 8 0	.....	
Ditto ditto ...	Mar. 4	Dy. 12mo; 192	1st; 1,000	P.	1 0 0	.....	
Mukherji and Chatterji; B. Banerji & Co.	1904. Dec. 19	D.cr. 16mo; 41	1st; 1,000	P.	.....	.....	
Mukherji and Chatterji; Bhattácháryya & Sons	1905. Jan. 18	D.cr. 16mo; 40	1st; 1,000	P.	0 3 0	.....	
R. Datta; Yadu Nath Mukherji ...	1904. Dec. 25	D.cr. 16mo; 208	2nd; 1,200	P.	0 8 0	.....	
Gopál Chandra Niyogí; the author	„ 20	D.cr. 16mo; 50	2nd; 3,000	P.	0 2 0	.....	
Gopál Chandra Niyogí; Vrajendra Náth De.	„ 15	Dy. 12mo; 180	1st; 3,000	P.	0 12 0	.....	
Bhánu Chandra Dás; the author ...	Nov. 19	D.cr. 16mo; 86	1st; 20	P.	0 5 0	.....	
R. Datta	Dec. 17	D.cr. 16mo; 32	13th; 25,000	P.	0 1 0	.....	
Ditto	1905. Jan. 19	D.cr. 16mo; 32	14th; 25,000	P.	0 1 0	.....	
R. Datta; Yadu Náth Mukherji ...	„ 2	D.cr. 16mo; 32	3rd; 3,000	P.	0 1 0	.....	
Sányál & Co.; Bhattácháryya & Sons.	1904. Dec. 27	D.cr. 16mo; 32	5th; 10,000	P.	0 1 0	.....	
Nút Vihárí Ráy	Aug. 17	Dy. 8vo; 114	2nd; 3,000	P.	1 0 0	.....	
Ramá Nath Pán; Náráyan Chandra Datta.	1905. Jan. 20	D.cr. 16mo; 108	3rd; 2,500	P.	0 3 0	.....	
Ramani Mohan De; the Majumdár Library.	„ 10	D.cr. 16mo; 127	1st; 1,000	P.	0 12 0	.....	
Yogendra Nath Chakravartí; Súryya Kumár Náth.	Feb. 3	Dy. 12mo; 58	1st; 2,000	P.	0 3 0	.....	
N. C. Ghosh	„ 8	Dy. 12mo; 60	12th; 5,000	P.	0 1 0	.....	
Ditto	„ 8	Dy. 12mo; 62	8 h; 5,000	P.	0 1 3	.....	
Púrna Chandra Dás; Jnánendra Nath Háldár.	„ 4	D.cr. 16mo; 52	Revised; 3,000	P.	0 2 0	.....	
Náráyan Chandra Pál; the author and Banerji & Co.	Jan. 29	Dy. 12mo; 72	1st; 1,000	P.	0 4 0	.....	

1 Serial number.	2 Registration number.	3 Title, with an English translation of the same when not in that language, the language of the book, and the subject.	4 Name of author, translator, or editor of the book, or any part of it.	5 Place of printing and publication.
		BENGALI BOOKS—continued.		
		LANGUAGE—*concluded*.		
96	399	Níti-Sikshá. Moral Instruction ...	Trailokya Náth Mukherji and Priya Lál De.	46, Bechu Chatterji's Street; 63, College Street; Calcutta.
97	402	Varna Sikshá. An Alphabetical Primer ...	Abid Ali Khán	4, William's Lane, Calcutta; Malda ...
98	401	Vángálá Vyákaran Pravesiká, An Introduction to Bengali Grammar.	Jagadbandhu Modak	46, Bechu Chatterji's Street; 30, Cornwallis Street; Calcutta.
99	441	Nava Varna Sikshá. New Alphabetical Primer. Part I.	Isán Chandra Mandal	81-1, Masjidbári Street, Calcutta; Kelomál, Midnapore.
		LAW.		
100	85	Vyavastha Sangraha. A Collection of Legal Opinions. Part II.	Dína Náth Basu	147, Baranasi Ghosh's Street; Calcutta
		MEDICINE.		
101	46	Mylleriyá. Malaria	Jnánendra Náráyan Bágchi ...	45, Benetolá Lane; 11, Simla Street; Calcutta.
102	207	Homiopyáthik Mate Strí Chikitsá, Treatment of Females according to Homœopathy.	.....	10, Sambhu Chandra Chatterji's Street; 12, Bonfield's Lane; Calcutta.
103	208	Homiopyáthik Chikitsá Kalpadruma. The Tree of Homœopathic Treatment that fulfils all Desires. Vol. III. Part 9.	Asvini Kumár Bhattácháryya ...	10, Sambhu Chandra Chatterji's Street; Calcutta.
104	209	Ditto ditto. Vol. III. Part 10 ...	Ditto ditto ...	Ditto ditto ...
105	210	Ditto ditto. Vol. III. Part 11 ...	Ditto ditto ...	Ditto ditto .
106	364	Chikitsá Kalpataru. The Tree of Medical Treatment that fulfils all Desires. Part IV.	Pulinchandra Sányál	2, Goábágán Street; 201, Cornwallis Street; Calcutta.
107	406	Olántá Chikitsá. Treatment of Cholera ...	Nisi Kánta Majumdár	81-1, Masjidbári Street; 207, Upper Chitpur Road; Calcutta.
108	413	Ditto ditto ...	Upendra Náth Mukherji	24, Beadon Street, Calcutta ... ...
		MISCELLANEOUS.		
109	4	Vangar Bhúmi-Rájasva O Práchín Aryya Grámya Samiti. Land Revenue of Bengal and Ancient Aryan Village Communities.	Amrita Lál Pál	The New Town Press, Bhawanipur ...
110	8	Viváha Sangít. Marriage Songs	Ráma Kánai Dutta	Brahmanberia, Comilla ... ...
111	18	Gárhasthya Dharmma. Domestic Duties ...	Srímatí Nagendrabálá Sarasvatí ...	17, Nanda Kumár Chaudhuri's 2nd Lane, Calcutta; Burdwan.
112	15	Matichur. A Ball of Sweetmeat. Part I ...	Miss R. S. Hossain	17, Nanda Kumár Chaudhuri's 2nd Lane; Kareyá Road, Entaly; Calcutta.
113	67	Grámophoner Gítávalí. A Collection of Songs on the Gramophone.	Niradvaran Sen and Brothers ...	70, Báránasi Ghosh's Street; 375, Upper Chitpur Road; Calcutta.
114	43	Gharer Lakshmi. The Goddess Lakshmí of the House.	Ráj Kumár Banerji	25, Patáldángá Street; Bowbázár Street; Calcutta.
115	153	Má Ná Mahásakti. Mother or the Great Power.	Kálíprasanna Ghosh	The Girís Press, Dacca ... ...
116	180	Patrávalí. A Collection of Letters. Part I	Svámi Vivekánanda	7, Sántirám Ghosh's Street; 14, Ráma Chandra Maitra's Lane; Calcutta.
117	403	Kanyá Viváher Sadupáy, Silpa Vijnán Sikshá. Proper Means of Marrying Daughters. Instruction in Arts.	Bhupendra Kumár Datta ...	63, Bechu Chatterji's Street; 15, Balarám Ghosh's Street; Calcutta
118	211	Purátan Panjiká. San 1251 Haite 1281 Sál. Old Almanacs. From 1251 to 1281 (B.S). Part I.	Srichandra Vidyánidhi	38-2, Bhavání Charan Datta's Street, Calcutta.
119	„	Ditto ditto. San 1282 Haite 1211 Sál. From 1282 to 1311 (B.S.) Part II.	Ditto ditto	Ditto ditto ...
120	268	Samáj Sanskárer Kathá. A Discourse on Social Reform.	Nagendra Náth Chatterji . .	32, Sukea's Street, Calcutta ...
121	316	Phuler Sáji. Flower-Basket	Surendra Mohan Bhattácháryya . .	14, Ráma Chandra Maitra's Lane; 3-1, Nílamani Mitra's Street; Calcutta.
122	372	Lord Karjjaner Káryya. Lord Curzon's Acts.	.....	6, College Square, Calcutta ... ...
123	384	Surápán Damaner Upáy. Means of Checking the Drinking-habit.	... ..	211, Cornwallis Street, Calcutta ...
124	430	Práner Hási. Heart's Laugh	Asutosh Mitra	137, Masjidbári Street, Calcutta ...

First Quarter ending 31st March 1905—continued.

6	7	8	9	10	11	12	13
Name or firm of printer and of publisher.	Date of issue from the press or of the publication	Size and number of sheets, leaves, or pages.	Number of edition and number of copies of which the edition consists.	Printed or litho'd.	Price at which the book is sold to the public.	Name and residence of the proprietor of copyright, or any part of it.	Number and date of Registration of copy right.
	1905.				Rs. A. P.		
R. Datta; G. N. Háldár ...	Mar. 6	D.cr.16mo; 76	8th; 3000	P.	0 3 0	.....	
Amrita Lál Ghosh; the author ...	Feb. 25	Dy. 16mo; 16	1st; 1,000	P.	0 0 3	.....	
R. Datta; Yadu Nath Mukherji ...	Mar. 3	Dy. 12mo; 64	18th; 2,000	P.	0 2 6	.....	
	1904.						
Bhúmá Charan Basu; Gopí Nath Málti.	Dec. 15	Dy. 12mo; 48	1st; 2,000	P.	0 1 0	.....	
	1905.						
Vishnu Charan Ghosh; the author	Jan. 11	Dy. 12mo; 120	1st; 1,000	P.	1 0 0	.....	
	1904.						
Sasibhúshan Chakravarti; Yatindra Mohan Bágchí.	Dec. 15	D.cr. 16mo; 228	1st; 1,000	P.	1 8 0	.....	
U. Rakshit; B. K. Pál & Co. ...	,, 29	Dy. 12mo; 245	1st; 1,000	P.	0 12 0	.....	
	1904.						
U. Rakshit; the editor	Dec. 27.	Dy 8vo; 32	1st; 1,000	P.	0 6 0	.....	
Ditto; ditto	1905 Jan. 6	Rl. 8vo; 32	1st; 1,000	P.	0 6 0	.....	
Ditto; ditto	,, 20	Dy. 8vo; 32	1st; 1,000	P.	0 6 0	.....	
T. C. As; Gurudás Chatterji ...	Feb. 4	Rl. 12mo; 359	2nd; 1,000	P.	1 4 0	.....	
Bhímá Charan Basu; the author ...	,, 12	Dy. 12mo; 64	1st; 1,000	P.	0 4 0	.....	
P. C. Mukherji & Sons; the Jaynagar Reading Club.	Mar. 4	Dy. 12mo; 28	3rd; 1,000	P.	.....	.....	
Manmatha Náth Mitra; the author	1905. Feb. 25	Dy. 8vo; 44	1st; 500	P.	.....	The author; Asst. Manager, Ráj Estate, Dighapatia.	
Sádhu Charan Chanda	Jan. 17	Rl. 16mo; 16	1st; 300	P.	.....	.....	
Sarat Chandra Chakravarti; Khagendra Náth Mustáphi.	1904. Dec. 12	Dy. 12mo; 128	1st; 500	P.	0 8 0	.....	
Sarat Chandra Chakravarti; the Manager, Navanur Káryyálay.	,, 15 1905. Jan. 5	Dy. 12mo; 100	1st; 100	P.	0 12 0	.....	
N. C. Pál; the authors		Cr. 8vo; 96	1st; 2,000	P.	.....	.....	
K. P. Chakravarti; Nidhi Chánd Banerji.	1904. Dec. 12	Dy 12mo; 54	1st; 300	P.	.....	.....	
Haríhar Nandí; Harakumár Basu	Nov. 20	Dy.12mo; 104	1st; 1,000	P.	0 10 0	.....	
Upendra Náth De Bhuyán; the author.	1905. Jan. 14	Dy. 12mo; 100	1st; 2,000	P.	0 8 0	.....	
G. C. Basu & Co.; the author ...	Feb 8	D.cr. 48mo; 48	1st; 350	P.	.....	.....	
Nútvihári Ráy	1904. Aug. 17	Dy.12mo; 1238	1st; 3,500	P.	10 0 0	.....	
Ditto	,, 17	Dy.12mo; 1234	1st; 3,500	P.	10 0 0	.....	
Prabhát Chandra Datta; S. B. Chakravarti.	1905. Jan. 20	Dy. 12mo; 36	1st; 1,000	P.	0 12 0	.....	
Lál Chánd Datta; Navakumár Datta.	,, 25	Dy 12mo; 432	1st; 2,000	P.	2 0 0	.....	
Nivárun Chandra Ghosh ...	Feb. 1	Dy. 8vo; 4	1st; 10,000	P.	.....	.....	
Kárttik Chandra Datta	,, 20	D. fc. 16mo; 16	1st; 3,000	P.	.....	.....	
Dinanáth Mánná; Basák and Sons	,, 24	Dy. 12mo; 20	1st; 1,000	P.	0 4 0	.....	

1 Serial number.	2 Registration number.	3 Title, with an English translation of the same when not in that language, the language of the book, and the subject.	4 Name of author, translator, or editor of the book, or any part of it.	5 Place of printing and publication.
		***BENGALI BOOKS*—continued.**		
		MISCELLANEOUS—*concld.*		
125	427	Heyánli Rahasya O Nútan Heyánlimálá. Mysteries of Riddles and a New Garland of Riddles.	Asutosh Mitra	127, Masjidbári Street, Calcutta ...
126	431	Rasamundi. A Kind of Sweatmeat ...	Ditto	Ditto ditto ...
127	432	Kautuk Chaturanga Vá Sataranja Vijnán. The game of Chess or the Science of the game of Chess.	Krishnadhan Vidyápati	Ditto ditto ...
128	442	Sachitra Sakher Pancharanga. Amateur Pantomime with Illustrations.	Kailás Chandra Kávatírtha ...	81-1, Masjidbári Street; 5-2, Rájendra Náth Son's Lane; Calcutta.
129	2181	Sangíta Sangraha. A collection of Songs ...	Tarafdár Brothers	61, Ahiritolá Street; 64, Harrison Road; Calcutta.
130	2157	Visvakosh. The Universal Dictionary Vol. XVI. Nos. 349 to 351, (together).	Nagendranáth Básu	5, Rámadhan Mitra's Lane; 14, Telipárá Lane; Calcutta.
		Educational—		
131	212	Purusha Parikshá. Testing of Men (T) ...	Mritunjay Vidyálankár	38-2, Bhaváni Charan Datta's Street, Calcutta.
132	2	Dril Sangit. Drill Songs	Vijay Náth Sarkár	The Adarsa Press, Barisal ... ...
133	367	Patralikhan Pranáli Samvalita Bályabodh Vyákaran. A Grammar for Childhood with Methods of Letter-writing.	Kshetramohan Brahma	2, Goábágán Street, Calcutta ...
134	9	Angachálaná Gítihár. Garland of Songs on the Exercise of the Body.	Krishna Chandra Pál	The New Town Press, Bhawanipur ...
135	19	Ádarsa Likhan Paddhati. Model Methods of Writing Letters. Part II.	Jagadís Chandra Ghosh	The Náráyan Press, Dacca ... ...
136	52	Patra O Dalil Likhan. Writing of Letters and Deeds. Part II.	Gopál Chandra Mukherji ..	3-4, Gaur Mohan Mukherji's Street; 66 College Street; Calcutta.
137	103	Ádarsa Lipi. Model Letter-writer Part II.	Rákhál Chandra Bakaí	203-2; 25; Cornwallis Street, Calcutta.
138	311	Patra Daliládir Ádarsa Pustak. Model Book of Letters and Deeds. Part II.	Súryya Kumár Adhikári	17, Nandakumár Chaudhuri's 2nd Lane; 25, Cornwallis Street; Calcutta.
139	365	Likhanádarsa. Model Letter-writer. Part I.	Satya Brothers	2, Goábágán Street; 25-2, Cornwallis Street; Calcutta.
140	233	Madhya Vángálá Vijnán Ridár. The Middle Vernacular Science Reader.	Girís Chandra Basu	117-1, Bowbázár Street; 103-3, College Street; Calcutta.
141	268	Saral Krishi Vijnán. Easy Science of Agriculture.	Nítya Gopál Mukherji	91, Upper Circular Road; 189, Bowbázar Street; Calcutta.
142	6	Ádarsa Lipi O Saral Varna Parichay. Model Copy-Book and Easy Alphabetical Primer.	Sítanáth Basák	The Syamantak Press, Dacca ...
		POETRY.		
143	2	Mahásmasán. The Great Resting-place of the Dead.	Srí Káykovád	The Girís Press, Dacca ... ...
144	3	Sisuhárá Jananí. Mother bereaved of her Child.	Srímatí Krishnaranginí Majumdár ...	The Tamoghna Press, Bonlia ...
145	4	Saisav Kavitá. Poems of Childhood. Part II.	Krishna Mohan Dhar	The Asutosh Press, Dacca .. ...
146	15	Avakás. Leisure	Haridás Ghosh	Kaldángá Lane; 3, Ghoshpárá Lane; Sulkeá; Howrah.
147	44	Satiprasasti Vá Tarpanánjali. Praise of a Chaste Woman or a Palmful of Oblation of Water to the names of Deceased Ancestors.	Yadu Náth Chakravartí	23, Pataldángá Street, Calcutta
148	216	Kautukvilás. Sports of Humour ..	Syámá Charan Dvija	38-2, Bhaváni Charan Datta's Street, Calcutta.
149	271	Parivrájye Kavitávárttá. Poetical Tidings from the seat of Asceticism.	Sarat Chandra Chaudhurí ...	32, Sukea's Street, Calcutta ... .
150	296	Prasthán. Departure	Girijá Prasanna Ráy	20; 203-2; Cornwallis Street, Calcutta
151	297	Vasanta Gáthá. Verses on Spring ...	Srímatí Nagendrabálá Sarsvatí ...	20, Cornwallis Street, Calcutta; Cuttack
152	346	Chhinnadal. Torn Leaves	Satís Chandra Ghosh	5, Sivanáráyan Dás's Lane, Calcutta ...
153	2106	Chitta Spandan. Trembling of the Heart	.....	115, Amherst Street; 9, Kindordine Lane; Calcutta.
154	L. No. 239	Dási. Maid-servant	Sudhindra Náth Tagore	80, Harrison Road, Calcutta ... ...
		Educational—		
155	230	Padyamálá. Garland of Poems. Part I ...	Manomohan Basu	28, Beadon Street; 203-2, Cornwallis Street; Calcutta.
156	397	Kavitá Sopán. Stepping-Stone to Poetry.	Mahendra Chandra Som	46, Bechu Chatterji's Street; 54-1, College Street; Calcutta.
		RELIGION.		
157	1	Etaddesíya Suddhitattvádi Smriti Sammata Asauch Vyavastha. Declaration of the Law relating to Impurity according to Suddhi Tattva and other works on Hindu Law in use in this Province. (II).	Bharat Chandra Siromoni ...	63, Bechu Chatterji's Street; 13, Garpár Road; Calcutta.

First Quarter ending 31st March 1905—continued.

6	7	8	9	10	11	12	13
Name or firm of printer and of publisher.	Date of issue from the press or of the publication.	Size and number of sheets, leaves, or pages.	Number of edition and number of copies of which the edition consists.	Printed or litho'd.	Price at which the book is sold to the public.	Name and residence of the proprietor of copyright, or any part of it.	Number and date of Registration of copyright.
	1905.				Rs. A. P.		
Dínanáth Mánná; Basák & Sons ...	Mar. 1	Dy. 12mo; 84	1st; 1,000	P.	0 4 0	.....	
Ditto ditto ...	Feb. 26	Dy. 12mo; 86	1st; 1,000	P.	0 4 0	.....	
Ditto ditto ...	„ 16 1904.	Dy. 12mo; 216	2nd; 1,000	P.	1 0 0	.....	
Bhímá Chagan Basu; the author ...	Nov. 1	Dy. 8vo; 23	1st; 2,000	P.	0 2 0	.....	
Priá Náth Ghosh; the author ...	Dec. 1	Rl. 16mo; 90	1st; 1,000	P.	.....	.....	
Púrna Chandra Dás; the author ...	„ 15	Dy. 4to; 96	1st; 1,000	P.	0 8 0 for each part.	.....	
Nútvihárí Ráy	Aug. 17 1905.	Dy. 8vo; 85	New; ...	P.	1 0 0	.....	
Nivárun Chandra Mukherji; Sántináth Sarkar.	Jan. 6	Dy. 16mo; 12	1st; 500	P.	0 6 0	Nivárun Chandra Mukherji, Uttarpárá, Barisal.	
Táriní Charan Ás	Feb. 15	Dy. 12mo; 70	5th; 1,000	P.	0 3 0	.....	
Manmatha Náth Mitra; the author	Mar. 6	Dy. 12mo; 28	1st; 1,000	P.	0 1 6	The author, Birbhum ...	
Lachhman Basák; Harirám Dhar	Jan. 20 1904.	Dy. 12mo; 60	3rd; 2,000	P.	0 4 0	.....	
Mukherji and Chatterji; the Siddheswarí Press Depository.	Dec. 20 1905.	Dc. 16mo; 78	1st; 1,000	P.	0 4 0	.....	
P. C. Sahá; B. Banerji & Co. ...	Jan. 10	Cr. 8vo; 94	2nd; 3,000	P.	0 4 0	.....	
Sarat Chandra Chakravartí; I. Banerji & Co.	„ 23	D.cr. 16mo; 72	4th; 3,000	P.	0 4 0	.....	
Táriní Charan Ás; the Edward Library.	Feb. 4	D.cr. 16mo; 32	1st; 5,000	P.	0 2 0	.....	
Ramánáth Pan; Náráyan Chandra Datta.	Jan. 2	D.cr. 16mo; 92	3rd; 8,000	P.	0 9 0	.....	
B. C. Sányál; the Indian Gardening Association.	„ 15 1904.	D.cr.16mo; 357	1st; 5,000	P.	1 0 0	.....	
Munsi Ekabbar; Ramánáth Basák	Dec. 10	Dy. 12mo; 36	6th; 2,000	P.	0 0 6	.....	
	1905.						
Haribar Naudí; Rajaní Kánta Kaviráj.	Jan. 3	Dy. 12mo; 558	1st; 1,000	P.	2 0 0	.....	
Kasimuddin Sarkár	F.b. 4 1904.	Fc. 8vo; 7	2nd; 100	P.	.....	The authoress, Boalia.	
Revatí Mohan Dás; the author ...	Dec. 12 1905.	Dy. 8vo; 49	1st; 200	P.	.....	.....	
Balái Chánd Pál; Haridás Ghosh...	Mar. 4 1904	Dy. 12mo; 35	1st; 250	P.	.....	The author, 3, Ghoshpárá Lane, Salkea, Howrah.	
K. P. Chakravartí; the author ...	Dec. 10	Dy. 12mo; 100	1st; 1,000	P.	0 8 0	.....	
Nút Vihárí Ráy	Aug. 17 1905.	Dy. 8vo; 56	New; 3,000	P.	0 8 0	.....	
Prabhát Chandra Datta; the author	Jan. 18	D.fc. 8vo; 9	1st; 1,000	P.	.....	.....	
Hari Charan Mánná; the Manomohan Library.	„ 21	D.fc 16mo; 40	1st; 1,000	P.	0 4 0	.....	
Hari Charan Mánná; Khagendra Nath Mustaphi.	„ 23	Dy. 12mo; 31	1st; 500	P.	0 5 0	...	
Púrna Chandra Dás; the author ...	Feb. 10 1904.	Dy. 16mo; 91	1st; 500	P.	.....	.....	
Náráyan Chandra Ghosh; Lalvihári Ráy Chaudhuri.	Nov. 20	Cr. 12mo; 151	1st; 250	P.	.....	.....	
.....	.....	Fc. 8vo; 8	1st; ...	P.	.....	.....	
J. N. Basu; the Monomohan Library	Jan. 10	Dy. 12mo; 36	4th; 10,000	P.	0 2 0	.....	
R. Datta; Náth & Co.	Mar. 2	D.cr. 16mo; 32	31st; 1,000	P.	0 1 6	.....	
G. C. Basu & Co.; Kapileswar Bhattácháryya.	Dec. 10	Dy. 12mo; 12	1st; 1,000	P.	0 2 6	.....	

1 Serial number.	2 Registration number.	3 Title, with an English translation of the same when not in that language, the language of the book, and the subject.	4 Name of author, translator, or editor of the book, or any part of it.	5 Place of printing and publication.
		***BENGALI BOOKS*—contd.**		
		RELIGION—*contd.*		
158	2	Avadhúta Gítiká. Songs by an Ascetic. (H).	Kángál Kshopá Chánd	63, Bechu Chatterji's Street, Calcutta; Bankáti, Burdwan.
159	4	Upásaná Tattva O Bráhma Dharmmer Sankshipta Mat O Visvás. Truths about Divine Worship and an Abstract of the Tenets and Beliefs of Brahmoism. (H).	Yogendra Nath Mitra	30-5, Madan Mitra's Lane, Calcutta ...
160	4	Rajani Vilás. Nocturnal Amusement (of Krishna with Rádhiká). (H).	Jívan Kisor Gosvámí	Burdwan ... ...
161	45	Nikás-Ákheri Vá Parinám. The Last Settlement of Accounts or the Final Result. (H).	Rámákshay Chatterji	25, Pataldánga Street; 201, Cornwallis Street; Calcutta.
162	64	Dharmma Vijnáner Múla Mantra. Fundamental Principles of the Science of Religion. (H).	Satís Chandra Ghosh	5, Sivanáráyan Dás's Lane, Calcutta ..
163	87	Upásanápranálí Vyákhyá. Explanation of the Methods of Worship. (B).	Gaur Govinda Ráy	3, Ramánáth Majumdar's Street, Calcutta.
164	2153	Kesav Chandra Vislesh O Sanslesh. Analysis and Synthesis in Kesav Chandra.	Ditto ditto ...	ditto ditto ...
165	214	Khila Harivansa. Harivansa, which is an Appendix (to the Mahábhárata). (T). (H).	.....	38-2, Bhaváni Charan Datta's Street, Calcutta.
166	235	Srí Srí Ráma Krishna Upades. Teachings of Ráma Krishna Paramahansa. (H).	Svámí Brahmánanda ...	14, Ráma Chandra Maitra's Lane, Calcutta
167	383	Brahma Sangíta. Songs about Brahma (God). (B).	.....	211, Cornwallis Street, Calcutta ...
168	408	Jívan O Maraṇánte Jívan. "Life and Life after Death." (T). (Theo).	Syámá Charan Bhattáchárya ...	3-4, Gaur Mohan Mukherji's Street; 28-2, Jhámápukur Lane; Calcutta.
169	2155	Hadis—Púrva Bibhág. The Hadis. First Part. No. 10. (T.) (M.)	Rev. Girís Chandra Sen	3, Ramánáth Majumdár's Street, Calcutta.
170	2167	Hagdír Krishnaráy Jí. The God Krishnaráy Ji of Bagra. (H).	Trailokyanáth Sarkár	6, College Square, Calcutta .. ...
171	27	Sástrapáther Dainik Táliká O Pada Saha Ámáder Panjiká, 1905 Sál. Our Almanac of 1905 with Daily Gospel Readings and a List of Bible Lessons. (C).	Miss Daw	41, Lower Circular Road; 31, Free School Street; Calcutta.
172	30	Khrishtiya Udyoga Samitir Sáptáhik Alochya Vishaya. Weekly Subject of Discourse of the Christian Endeavour Society. (C).	Rev. A. E. Summers	41, Lower Circular Road; 135, Dharmmatalá Street, Calcutta.
173	131	Khrista Manushyader Jívan O Jyotih, Christ is the Life and Luster of Men. (C).	Rev. M. N. Náth	41, Lower Circular Road, Calcutta. ...
174	132	Yisur Pakshe Yohan Báptáijaker Sákshya. Testimony of John the Baptist in favour of Jesus. (C).	Ditto	Ditto ditto ... ...
175	133	Yisur Pratham Kayek Jan Sishya Labh. The Acquisition of a First few Disciples by Jesus. (C).	Ditto	Ditto ditto ... ...
176	134	Kánná Nagare Yisur Pratham Ascharyya Kriyá. The first Miracle performed by Jesus at Cana.	Ditto	Ditto ditto ... ...
177	135	Yisu O Nikdím. Jesus and Nicodemus. (C).	Ditto	Ditto ditto ... ...
178	136	Yisu Manushyader Jívan O Alo. Jesus is the Life and Light of Men. (C).	Rev. A. Jewson	Ditto ditto ... ...
179	137	Yohan Báptáijaker Sákshya. Testimony of John the Baptist. (C).	Ditto	Ditto ditto ... ...
180	138	Yisu Kayek Jan Sishya Labh Karen. Jesus secures some disciples. (C).	Ditto	Ditto ditto ... ...
181	139	Jalke Drákshárás Karé. Turning of Water into Grape-juice. (C).	Ditto	Ditto ditto ... ...
182	140	Yisu O Nikdím. Jesus and Nicodemus. (C).	Ditto	Ditto ditto ... ...
183	154	Sokáturá Nárir Prati Yisur Prem. "Christ's Love to a Bereaved Woman." (C).	Dr. G. H. Reuse	41, Lower Circular Road; 23, Chauringhi Road; Calcutta.
184	155	Mangalchandir Vrata. The Vow in honour of the auspicious Goddess Chandí. (Durgá). (C).	Ditto	Ditto ditto ... ...
185	156	Yudhishthrer Prati Dharmmer Prasna. Dharma's Question to Yudhishthira. (C).	Ditto	Ditto ditto ... ..
186	157	Já't Yáve. Caste will be Lost. (C) ...	Ditto	Ditto ditto .. ...
187	2116	Dainik Sástra Páth. Daily Readings of the Gospel. For December 1904. (C).	Miss Daw	41, Lower Circular Road; 31, Free School Street; Calcutta.
188	159	Ditto ditto. For January 1905. (C)	Do.	Ditto ditto ... ...
189	321	Ditto ditto. For February 1905. (C).	Do.	Ditto ditto ... ...
190	378	Ditto ditto. For March 1905 ...	Do.	Ditto ditto ... ...
191	324	Yisu O Parajátiyá Stri. Jesus and the Samaritan Woman. (C).	Rev. A. Jewson	41, Lower Circular Road, Calcutta ...
192	324	Kaunā Nagare Yisur Dvitíya Alaukik Kriyá. The Second Miracle of Jesus at Canna.	Ditto	Ditto ditto ... ...
193	„	Baithesdá Arhát Dayár Griha. Bethesad. or the House of Mercy. (C).	Ditto	Ditto ditto ... ...
194	„	Ekti Bálaker Ruti O Yisur Kshamatá. A Boy's Bread and Jesus's Power. (C).	Ditto	Ditto ditto ... ...

First Quarter ending 31st March 1905—continued.

6	7	8	9	10	11	12	13
Name or firm of printer and publisher.	Date of issue from the press or of the publication.	Size and number of sheets, leaves, or pages.	Number of edition and number of copies of which the edition consists.	Printed or lithog'd.	Price at which the book is sold to the public.	Name and residence of the proprietor of copyright, or any part of it.	Number and date of Registration of copy right.
	1904.				Rs. A. P.		
G. C. Basu & Co.; Rajani Kánta Háldár.	Dec. 8 1905	D.cr. 16mo; 36	1st; 1,000	P.	.....	.....	
Bhút Náth Pálit	Jan. 1	D.fc. 16mo; 44	1st; 500	P.	0 3 0	.....	
Vinod Vihárí Sarkar; Háfijaddi Sekh.	Feb. 27	Dy. 8vo; 31	1st; 150	P.	0 4 0	The author, Gadárdihi, Bankura.	
K. P. Chakravarti; Gurudás Chatterji.	Jan. 1	Dy. 12mo; 114	1st; 1,000	P.	0 8 0	.....	
	1904						
Púrna Chandra Dás; the author ...	Dec. 28	Dy. 8vo; 7	1st; 500	P.	.....	.....	
	1905						
K. P. Náth	Jan. 9	Dy. 12mo; 52	1st; 200	P.	0 2 0	.....	
	1904						
Ditto	Dec. 20	Dy. 12mo; 19	1st; 250	P.	0 1 0	.....	
Nát Vihári Ráy	Aug. 17 1905	Rl. 8vo; 469	2nd; 3,500	P.	4 0 0	.....	
Lál Chánd Datta; the Ráma Krishna Mission.	Jan. 14	Cr. 16mo; 64	1st; 1,000	P.	0 4 0	.....	
Kárttik Chandra Datta; the Sádháran Bráhmo Samáj.	Feb. 15	D.fc. 16mo; 636	8th; 2,000	P.	1 8 0	.....	
Mukherji & Chatterji; Aghor Náth Datta.	„ 15	Dy. 16mo; 47	1st; 1,000	P.	0 3 0	.....	
	1904						
K. P. Náth	Dec. 20	Rl. 8vo; 62	1st; 500	P.	0 8 0	.....	
Nivárun Chandra Ghosh ...	„ 20	Dy. 12mo; 40	1st; 1,000	P.	0 2 0	.....	
Rev. Percy Knight; the Y. W. C. A.	„ 23	Dy. 8vo; 12	1st; 325	P.	0 1 0	.....	
Rev. Percy Knight; the C. E. Society.	„ 15	Fc. 8vo; 4	1st; 400	P.	...	.....	
Rev. Percy Knight; the B. S. S. Union.	„ 22	Rl. 8vo; 2	1st; 2,800	P.	20 per anna.	.....	
Ditto ditto	„ 22	Rl. 8vo; 2	1st; 2,800	P.	20 per anna.	.....	
Ditto ditto	„ 22	Rl. 8vo; 2	1st; 2,800	P.	20 per anna.	.....	
Ditto ditto	„ 22	Rl. 8vo. 2	1st; 2,800	P.	20 per anna.	.....	
Ditto ditto	„ 22	Rl. 8vo; 2	1st; 2,800	P.	20 per anna.	.....	
Ditto ditto	„ 22	Dy. 16mo; 2	1st; 2,800	P.	50 per anna.	.....	
Ditto ditto	„ 22	Dy. 16mo; 2	1st; 2,800	P.	50 per anna.	.....	
Ditto ditto	„ 22	Dy. 16mo; 2	1st; 2,800	P.	50 per anna.	.....	
Ditto ditto	„ 22	Dy. 16mo; 2	1st; 2,800	P.	50 per anna.	.....	
Ditto ditto	„ 22	Dy. 16mo; 2	1st; 2,800	P.	50 per anna.	.....	
Rev. Percy Knight; the C. T. and B. Society.	„ 23	Cr. 8vo; 4	1st; 12,000	P.	...	.....	
Ditto ditto	„ 13	Rl. 8vo; 4	1st; 12,000	P.	...	.....	
Ditto ditto	„ 31	Cr. 8vo; 4	1st; 1,500	P.	...	.....	
Ditto ditto	„ 31	Cr. 8vo; 4	1st; 1,500	P.	...	.....	
Rev. Percy Knight; the Y. W. C. A.	Nov. 26	Dy. 8vo; 4	1st; 350	P.	...	.....	
Ditto ditto	Dec. 29 1905	Dy. 8vo; 4	1st; 360	P.	...	.....	
Ditto ditto	Jan. 28	Dy 8vo; 4	1st; 360	P.	...	.....	
Ditto ditto	Feb. 18	Dy. 8vo; 4	1st; 360	P.	..	.....	
Rev. Percy Knight; the B. S. S. Union.	Jan. 27	Dy. 16mo; 2	1st; 2,800	P.	50 per anna.	.....	
Ditto ditto	Jan. 27	Dy. 16mo; 2	1st; 2,800	P.	50 per anna.	.....	
Ditto ditto	„ 27	Dy. 16mo; 2	1st; 2,800	P.	50 per anna.	.....	
Ditto ditto	„ 27	Dy. 16mo; 2	1st; 2,800	P.	50 per anna.	.....	

1 Serial Number.	2 Registration number.	3 Title, with an English translation of the same when not in that language, the language of the book, and the subject.	4 Name of author, translator, or editor of the book, or any part of it.	5 Place of printing and publication.
		BENGALI BOOKS—contd.		
		RELIGION—*concld.*		
195	325	Yisu Yákober Kúper Dhára. Jesus on the side of Jacob's Well. (C).	Rev. M. N. Nath	41, Lower Circular Road, Calcutta ...
196	,,	Kánná Nagare Dvitiya Áscharyya Kriyá. Second Miracle at the Town of Canna. (C).	Ditto	Ditto ditto ... ...
197	,,	Yisu Baithesdá Pushkariuir Dhára. Jesus by the side of the Pool of Bethesda. (C).	Ditto	Ditto ditto ... ...
198	,,	Ruti O Matshya Vishayak Áscharyya Kriyá. Miracles about Bread and Fish. (C).	Ditto	Ditto ditto .. ...
199	377	Parvate Datta Yisur Upades. The Sermon on the Mount. (C).	.....	41, Lower Circular Road; 23, Chanringhi Road; Calcutta.
200	L. No. 239	Prácbin Vángálá Granthávalí, Mahábhárat, Asvamedha Parva. Collection of Old Bengali Works The Mahabhárata. The Chapter on Asvamedha (the Horse Sacrifice). Vol. XV. (H).	Edited by Dines Chandra Sen ...	5, Rámadhan Mitra's Lane; 197-1, Cornwallis Street; Calcutta.
201	,,	Prácbin Vángálá Granthávalí. Collection of Old Bengali Works. First Year No. 6.	Mahámáhopádhyáya Haraprasád Sástrí.	Ditto ditto ... ...
202	,,	Ditto ditto. Part XII ...	.....	Ditto ditto ... ...
203	,,	Ditto ditto. Part XIII ...	Edited by Nagendranath Basu ...	Ditto ditto ... ...
204	,,	Ditto ditto. Part XIV ...	.....	Ditto ditto ... ...
205	435	Sátvata Samhitá. A Treatise in Honour of Vishnu.	J. N. Tarkachudámani. Government "Honor," A. M. Lecturer, &c.	5, Rámdhan Mitra's Lane; 24, Jorábágán Lane; Calcutta.
		SCIENCE (MATHEMATICAL).		
		Educational—		
206	9	Sisuranjan Dhárápát. Arithmetical Tables for the Entertainment of Children.	Kailás Chandra Sáhá	The Upen Press, Comilla ... ...
207	48	Sachitra Ganitábalur. Rudiments of Arithmetic with Illustration.	Manomohan Chakravartí	3-4, Gaur Mohan Mukherji's Street; 67, College Street; Calcutta.
208	49	Saral Ganit Sikshá. Easy Instruction in Arithmetic.	Vaikuntha Chandra Ráy	3-4 Gaur Mohan Mukherji's Street, Calcutta.
209	50	Sankshipta Ganitasár. Essence of Arithmetic Abridged.	Padmalochan Ghosh and Hara Náth Ghosh.	Ditto ditto ...
210	53	Nútan Átiganit. New Arithmetic ...	Matilál Chakravartí	Ditto ditto ...
211	188	Sachitra Vrihat Dhárápát. Enlarged Arithmetical Tables with Illustrations.	Prasanna Kumár Vatavyál	25, Ráybágán Street, Calcutta ...
212	189	Sachitra Dhárápát. Arithmetical Tables with Illustrations.	Ditto ditto ...	Ditto ditto ... ...
213	2172	Nava Dhárápát. New Arithmetical Tables	Panchánan Ghosh	32-1, Malangá Lane, Calcutta ...
214	341	Mánasánka Samvalita Subhankarí. Subhankar's System with Mental Arithmetic.	Ditto	Ditto ditto ... ...
215	170	Vyavahárik Jyámiti O Parimiti. Practical Geometry and Mensuration.	Ditto	Ditto ditto ... ...
216	112	Saral Vyavahárik Jyámiti O Parimiti. Easy Practical Geometry and Mensuration.	Upendra Lál Bakaí	203-2; 25; Cornwallis Street, Calcutta
217	2108	Jyámiti Sár. Essence of Geometry ...	Kunja Vihárí Dás Gupta ...	25, Ráybágán Street; 54, College Street; Calcutta.
		SCIENCE (NATURAL AND OTHER).		
		Educational—		
218	21	Uchcha Prámári Vijnán Ridárer Pramottar. A Catechism of the Upper Primary Science Reader.	Vaikuntha Chandra Nath ...	The Gopinath Press, Dacca ... ...
219	81	Vijnánabodh. Knowledge of Science ...	Kánái Lál De and Trailokya Náth Mukherji.	46, Bechu Chatterji's Street; 63, College Street; Calcutta.
220	171	Ditto ditto ..	Ditto ditto ...	Ditto ditto ...
221	145	Langmyáner Uchcha Práthamik Vijnán Páth. Longman's Upper Primary Science Reader.	.....	24, Girls Vidyáratna's Lane, Calcutta; 8, Hornby Road, Bombay.
222	344	Vijnan Páth. Science Reader	Rámendra Sundar Trivedí and Isán Chandra Ghosh.	25, Ráybágán Street; 6, William's Lane; Calcutta.
		ENGLISH BOOKS.		
		BIOGRAPHY.		
1	224	Private Memoirs of the Emperor Humayun. (T).	Translated by Major Charles Stewart	38-2, Bhávání Charan Datta's Street, Calcutta.
2	355	A Brahman Convert	B. J. Lacy and others	5 & 6, Government Place, Calcutta; Cawnpur.
		DRAMA.		
3	221	Sarmishthá. (A Name). (T)	Michael M. S. Datta	38-2, Bhavání Charan Datta's Street, Calcutta.
4	225	Ratnávali. (A Name). (T)	Ditto ditto	Ditto ditto ...
		FICTION.		
5	33	Chandra Sekhar. (A Name). (T) ...	Translated by Manmatha Náth Ráy Chaudhurí.	The Cherry Press, 3, Humayun Place, Calcutta; 46, Great Russell Street, W. C. London.

First Quarter ending 31st March 1905—continued.

6	7	8	9	10	11	12	13
Name of firm of printer and of publisher.	Date of issue from the press or of the publication	Size and number of sheets, leaves, or pages.	Number of edition and number of copies of which the edition consists.	Printed or lithd.	Price at which the books are sold to the public.	Name and residence of the proprietor of copyright, or any part of it.	Number and date of Registration of copyright.
					Rs. A. P.		
Rev. Percy Knight; the B. S. S. Union.	1905 Jan. 25	Rl. 8vo; 2	1st; 2,700	P.	20 per anna.	.....	
Ditto ditto	„ 25	Rl. 8vo; 2	1st; 2,700	P.	20 per anna.	.....	
Ditto ditto	„ 25	Rl. 8vo; 2	1st; 2,700	P.	20 per anna.	.....	
Ditto ditto	„ 25	Rl. 8vo; 2	1st; 2,700	P.	20 per anna.	.....	
Rev. Percy Kuight; the C. A. B. Society.	„ 7	Cr. 8vo; 10	1st; 50,000	P.	0 1 6	.....	
A. Basu & Co.; the Sáhitya Parishad office.	...	Dy. 8vo; 64	1st; ...	P.	...	.....	
Ditto ditto	...	Dy. 8vo; 64	1st; ...	P.	...	.....	
Ditto ditto	...	Dy. 8vo; 64	1st; ...	P.	...	.....	
Ditto ditto	...	Dy. 8vo; 64	1st; ...	P.	...	.....	
Ditto ditto	...	Dy. 8vo; 64	1st; ...	P.	...	.....	
					£. s. d.		
P. C. Das; the author	Mar. 3	Dy. 8vo; 14	2nd; 350	P.	0 1 0	.....	
					Rs. A. P.		
Gopál Chandra Dás; Rajaní Kánta Gupta.	Jan. 10	Dy. 12mo; 160	1st; 1,000	P.	0 4 0	.....	
Mukherji and Chatterji; the Student's Library.	1904 Dec. 19	D.cr.16mo; 188	1st; 50	P.	.....	.....	
Mukherji and Chatterji; the Metcalfe Press.	„ 17	D.cr.16mo; 181	1st; 50	P.	0 4 0	.....	
Mukherji and Chatterji; the author.	„ 16	D.cr.16mo; 110	1st; 25	P	0 4 0	.....	
Ditto ditto ...	„ 16	D.cr 16mo; 148	1st; 150	P.	0 4 0	.....	
Sányál & Co.	1905 Jan. 18	Dy. 12mo; 36	6th; 2,000	P.	0 1 6	.....	
Ditto	„ 18	Dy. 12mo; 24	1st; 1,000	P.	0 1 0	.....	
S. P. Ghosh	1904 Dec. 6	Rl. 16mo; 64	15th; 3,000	P.	0 1 0	.....	
Ditto	1905 Jan. 24	D.cr.16mo; 144	34th; 3,000	P.	0 4 0	.....	
Ditto	„ 6	D.cr.16mo; 166	2nd; 5,000		0 8 0	.....	
Prem Chandra Sáhá, B. Banerji & Co.	„ 3	Cr. 8vo; 196	2nd; 1,000	P.	0 4 0	.....	
Sányál & Co; Yogíndra Náth Sarkár.	1904 Dec. 10	D.cr.16mo; 170	3rd; 4,000	P.	0 6 0	.....	
Gopí Náth Basák; the Ripon Library.	1905 Jan. 15	Dy. 12mo; 114	2nd; 1,000	P.	0 10 0	.....	
R. Datta; G. N. Háldár ...	1904 Dec. 19	D.cr.16mo; 110	15th; 1,000	P.	0 3 0	.....	
Ditto ditto	„ 25	D.cr.16mo; 110	16th; 5,000	P.	0 3 0	.....	
Sasi Bhúshan Bhattácharyya; Longmans Green & Co.	1905 Jan. 7	D.cr.16mo; 144	1st; 10,000	P.	0 4 0	The publishers, 8, Hornby Road, Bombay.	No. 1 Reg. No. 85, dated 2nd Feb. 1905.
Sányál & Co.; Rámendra Sundar Trivedí.	Feb 10	D.cr.16mo; 110	11th; 25,000	P.	0 3 0	.....	
Nút Vihárí Ráy	1904 Aug. 17	Dy. 8vo; 186	New; 2,000	P.	5 0 0	.....	
Thacker, Spink & Co.; The S. P. G. Mission.	1905 Jan. 25	Dy. 8vo; 11	1st; 1,100	P.	.....	.....	
Nút Vihári Ráy	1904 Aug. 17	Dy. 12mo; 90	1st; 1,500	P.	1 0 0	.....	
Ditto	„ 17	Dy. 12mo; 71	1st; 1,500	P.	1 0 0	.....	
					£. s. d.		
Tulasí Charan Dás; Luzac & Co. .	Nov. 12	D.cr.16mo; 338	1st; 1,500	P.	0 6 0	.....	

1 Serial number.	2 Registration number.	3 Title, with an English translation of the same when not in that language, the language of the book, and the subject.	4 Name of author, translator, or editor of the book, or any part of it.	5 Place of printing and publication.
		ENGLISH BOOKS—contd.		
		HISTORY (INCLUDING GEOGRAPHY).		
6	222	History of the Sikhs	Joseph Davey Cunningham ...	38-2, Bhaváni Charan Datta's Street, Calcutta.
7	400	The Early History and Growth of Calcutta...	Rájá Vinay Krishna Dev Bahadur ...	7, Council House Street, Calcutta ...
		Educational—		
8	36	A Brief View of Indian History ...	D. N. Nyogí	The Orissa Mission Press, Cuttak ...
9	202	A Primer of English History for Indian Students.	Michael Prothero	45, Beniatolá Street; 54, College Street; Calcutta.
10	412	A Brief History of Ancient and Modern Bengal.	R. C. Datta	62-2-1, Beadon Street, Calcutta ...
11	124	The Elements of Modern Geography ...	J. C. Mukherji	58, Wellington Street; 10, Haladhar Barddhan's Lane; Calcutta.
12	103	A Primer of Geography	Nihár Ranjan Banerji	59, Mirjapur Street, Calcutta
13	424	A Safe Guide to Physical Geography and Science Primer.	Kunja Vihári De ...	17, Nadat Mitra's Lane, Calcutta
14	2125	The Calcutta University Questions on the History of India from 1858 to 1904.	A. C. Chakravartí	108, Báránasi Ghosh's Street; 65, College Street; Calcutta.
15	2133	A Brief Outline of Physical Geography in the form of Questions and Answers.	R. Mitra	21, Bolorám Ghosh's Street; 26, Cornwallis Street, Calcutta.
		LANGUAGE.		
		Educational—		
16	1	Choice Readings from Popular Authors ...	Bhavaranjan Majumdár	The National Machine Press, Barisal
17	16	Elementary English Readings from Standard Authors.	Lalit Mohan Dás Gupta	28, Beadon Row; 63, College Street; Calcutta.
18	17	Easy English Readings	.....	28, Beadon Row, Calcutta; Dacca ..
19	41	Popular Selections from Popular and Modern English Literature. Part I.	B. K. Banerji	3-4, Gaur Mohan Mukherji's Street, Calcutta; Puntyá, Rajshahi.
20	55	Grammar	S. Ráy	3-4, Gaur Mohan Mukherji's Street; 57, College Street; Calcutta.
21	76	The National English Reader. Fourth Book.	Lily Soward	32-1, Balangá Lane, Calcutta ...
22	77	The National English Primer	Ditto	Ditto ditto ...
23	340	The National English Reader. Second Book.	Ditto	Ditto ditto ... ...
24	94	Model Papers on the English Entrance Course for 1906. Part II.	Isán Chandra Ghosh and Gangádhar Banerji.	114, Amherst Street; 54, College Street; Calcutta.
25	102	The Juvenile Reader	...	59, Mirjapur Street, Calcutta ...
26	109	A Lower Class English Grammar ...	Mathurá Nath Barmá ...	203-2; 25; Cornwallis Street, Calcutta
27	110	A Comprehensive Key to the English Entrance Course for 1906.	Bholá Náth Pál ...	Ditto ditto ... ...
28	113	The Junior Reader	Mathurá Náth Barmá	Ditto ditto ... ...
29	114	The Juvenile Reader	Ditto	Ditto ditto ... ...
30	117	Model Questions with Model Answers to the Prose Pieces of the F.A. Course in English for 1905.	J. N. Bhattáchárryya	Ditto ditto ... ...
31	186	Hints on English Composition	Dvárahá Náth Basu	Ditto ditto ... ..
32	111	Model Questions with Model Answers on the English Entrance Course for 1905	J. N. Bhattáchárryya and S. N. Sarkár	25, Ráybágán Street; 65, College Street; Calcutta.
33	258	The New Standard Reader	A. C. Sen and R. C Chakravarti	36, Pataldángá Street; Amherst Street, Calcutta.
34	283	Notes on Tennyson's Holy Grail ...	A. Banerji	51, Sankáritolá Street, Calcutta ...
35	347	Model Questions and Answers with useful Notes on Helps's Essays.	D N. Dás	25, Ráybágán Street; 28, European Asylum Lane, Calcutta.
36	422	A Key to the English Entrance Course, 1906.	D. B. Set	70, Baranasi Ghosh's Street; 54, College Street; Calcutta.
37	449	The Model English Reader .	Devendra Chandra Visvás and Prasanna Kumár sen	28, Beadon Row, Calcutta; Dacca ...
38	450	Junior English Reader ...	S. N. Bhadra. ...	Ditto ditto . ...
39	2100	Instructive Reader for Indian Schools ...	Kedár Náth Datta	35, Ráybágán Street; 57-1, College Street; Calcutta.
40	17	Model Questions with Model Answers to the Entrance Course in English for 1906.	Vrindavan Dhar ...	The Asutosh Press, Dacca .. ...
41	155	Ditto ditto. Part II ..	Ditto ditto ...	Ditto ditto ... ...
42	38	Model Questions with Answers on the English Entrance Course for 1906. Part I.	Dinabandhu Majumdár and Satya Bhúshan Datta.	The Isán Press, Dacca ... ...

First Quarter ending 31st March 1905—continued.

6	7	8	9	10	11	12	13
Name or firm of printer and of publisher.	Date of issue from the press or of the publication.	Size and number of sheets, leaves, or pages.	Number of edition and number of copies of which the edition consists.	Printed or litho'd.	Price at which the book is sold to the public.	Name and residence of the proprietor of copyright, or any part of it.	Number and date of Registration of copy right.
					Rs. A. P.		
Nát Vihári Ráy	1904 Aug. 17	Cr. 8vo; 565	New; 1,500	P.	8 0 0	.....	
The Bengal Printing Company, Limited.	1905 Feb. 8	Cr. 8vo; 280	1st; 1,000	P.	5 0 0	The author, 106-1, Grey Street, Calcutta.	No. 2 Regr. No. 43. dated 14th Mar. 1905.
Rev. R. J. Grundy	Jan. 20 1905	Cr. 8vo; 290	1st; 500	P.	1 8 0	The author, Calcutta.	
Sasi Bhúshan Chakravartí; S. K. Lahiri & Co.	Dec. 29	D.cr.16mo; 330	1st; 20,000	P.	1 8 0	.....	
S. K. Sáhá; R. P. Mitra ...	1905 Feb. 25	D.cr.16mo; 117	6th; 1,000	P.	...	.....	
B. K. Dás; S. C. Addhya & Co. ...	1904 Dec. 28	D.cr.16mo; 176	3rd; 2,000	P.	0 10 0	.....	
Sarvesvar Bhattácháryya ...	„ 20	D.cr.16mo; 112	1st; 1,000	P.	0 8 0	.....	
U. C. Sámanta; T. N. De ...	1905 Feb. 17	Dy. 12mo; 82	1st; 1,000	P.	0 8 0	.....	
Náráyan Chandra Pál; S. C. Basu	1904 Nov. 25	Der. 16mo; 112	1st; 2,000	P.	0 8 0	.....	
K. M. Sinha; Gurudás Chatterji ...	„ 28	Dy. 12mo; 36	1st; 1,000	P.	0 5 0	.....	
M. Baks; the National Agency ...	Dec. 15	Cr. 8vo; 126	1st; 1,000	P.	0 10 0	Maulá Baks, Barisal.	
J. N. Basu; B. N. De	„ 20	D.cr.16mo; 128	1st; 1,250	P.	0 12 0	.....	
J. N. Basu; the Popular Book Society.	„ 25	D.cr.16mo; 120	New; 3,000	P.	0 12 0	.....	
Mukherji and Chatterji; the author	„ 18	D.cr.16mo; 164	3rd; 1,000	P.	...	.....	
Mukherji and Chatterji; A. K. Ráy & Co.	„ 22	D.fc.16mo; 115	1st; 1,000	P.	0 6 0	.....	
S. P. Ghosh; the National Printing and Publishing House.	„ 12	Rl. 16mo; 144	3rd; 2,017	P.	0 12 0	.....	
Ditto ditto ...	„ 31	D.cr. 16mo; 56	5th; 1,000	P.	0 3 0	.....	
Ditto ditto ...	1905 Feb. 4	D.cr. 16mo; 70	10th; 2,000	P.	0 6 0	.....	
Gopál Chandra Niyogí; S. K. Láhirí & Co.	1904 Dec. 20	D.cr.16mo; 166	1st; 3,000	P.	1 4 0 For 2 Parts	.....	
Sarvesvar Bhattácháryya ...	„ 24	D.cr.16mo; 196	1st; 1,000	P.	1 0 0	.....	
Prem Chandra Sáhá, ; B. Banerji & Co.	„ 25	Fc. 8vo; 90	New, 1,000	P.	0 4 0	.....	
Ditto ditto ...	„ 20	Cr. 8vo; 412	1st; 2,000	P.	2 0 0	.....	
Ditto ditto ...	„ 20	Cr. 8vo; 112	New; 1,000	P.	0 10 0	.....	
Ditto ditto ...	„ 20	Cr. 8vo; 133	New; 1,000	P.	0 12 0	.....	
Ditto ditto ...	„ 15	Cr. 8vo; 58	1st; 1,000	P.	0 6 0	.....	
Ditto ditto ...	Jan. 9 1905	D.fc.16mo; 182	2nd; 3,000	P.	0 12 0	.....	
Sányál & Co.; Bhattácháryya and Sons.	„ 25	Cr. 8vo; 125	1st; 1,000	P.	0 10 0	.....	
Nipin Vihárí Náth; Sen Gupta & Co.	„	D.cr. 8vo; 68	1st; 500	P.	0 8 0	.....	
Panchánan Sárkár	Feb. 1	D.cr.16mo; 120	1st; 1,250	P.	1 0 0	.....	
Sányál & Co.; the author ...	Jan. 29	D.cr. 16mo; 80	1st; 2,000	P.	0 6 0	.....	
N. C. Pal; S. K. Láhirí & Co. ...	Feb. 20	... 416	1st; 4,500	P.	2 0 0	.....	
J. N. Basu; Brajendra Nath Majumdár.	„ 20	D.cr.16mo; 120	4th; 1,000	P.	0 10 0	.....	
J. N. Basu; the author ...	Mar. 3	D.cr.16mo; 138	5th; ...	P.	0 12 0	.....	
Sányál & Co.; A. K. Ráy & Co. ...	1904 Nov. 15	D.cr.16mo; 140	2nd; 2,000	P.	0 12 0	.....	
Revatí Mohon Dás; Hariram Dhar	Dec. 30	Dy. 12mo, 276	1st; 5,000	P.	0 14 0	.....	
Ditto	1905 Dec. 20	Dy. 12mo; 218	1st; 2,000	P.	0 12 0	.....	
M. N. De	Feb. 20	Dy. 12mo; 36	1st; 2,000	P.	0 12 0	.....	

1 Serial number.	2 Registration number.	3 Title, with an English translation of the same when not in that language, the language of the book, and the subject.	4 Name of author, translator, or editor of the book, or any part of it.	5 Place of printing and publication.
		ENGLISH BOOKS—contd.		
		LAW.		
43	61	Hand-Book of the Indian Codes and Statutes, Comprising all the Important Acts, Statutes, Penal Codes and Regulations corrected up to date. Vol. II.	Harakumár Mitra	13, Hara Chandra Mallik's Street; 6, Old China Bázár Street; Calcutta.
44	62	Ditto ditto Vol. III ...	Ditto	Ditto ditto ...
45	61	Ditto ditto Vol. IV ...	Ditto	Ditto ditto ...
46	262	Principles of Law of Contract	Ditto	Ditto ditto ...
47	63	The Calcutta Municipal Act, with a full Index.	Ditto	Ditto ditto ...
48	201	Military and Cantonment Law in India ...	H. W. C. Carnduff, I.C.S. ...	45, Beniatolá Lane; 54, College Street; Calcutta.
49	248	The Law of Limitation and Prescription (in British India) including Easements with an Appendix of Acts and a full Commentary on Act XV of 1877.	Upendra Náth Mitra	3, Hastings Street, Calcutta ...
50	356	Collier's Bengal Municipal Manual ...	F. R. S. Collier	5 and 6, Government Place, Calcutta ...
51	433	The Case-noted Indian Contract Act (Act No. IX of 1872).	Narendra Kumár Basu	15, Phakir Chánd De's Lane; 6, Hastings Street; Calcutta.
		MEDICINE.		
52	404	A Short Manual of Unipathy	B. B. Batabyál	63, Bechu Chatterji's Street; 195, Bowbázár Street; Calcutta.
53	416	Plague. Its Prevention and Cure ...	D. D. Gupta	62-2-1, Beadon Street, Calcutta ...
		MISCELLANEOUS.		
54	1	The Universal Press Pocket Diary. 1905 ...	.....	53, Kailás Chandra Basu's Lane, Howrah.
55	1	Brief History of the Calcutta Auxiliary to the British and Foreign Bible Society, 1811-1904.	Crayden Edmunds, M.A.	Pokhuria, Manbhum ... ...
56	4	Report of the C. M. S. Santal Native Church Council, 1903-1904.	Rev. Canon F. T. Cole	Ditto. ...
57	9	Moravian Missions. Leh Medical Mission Report for 1904.	D. E. Shaw	Ditto. ...
58	13	The New Commercial Diary for 1905 ...	S. N. Mukherji	The Sálkia Printing Works, Howrah ...
59	192	A Half-yearly Graduation List. Vol. II ...	Mahim Chandra Sarkár	25, Ráy Bágán Street, Calcutta; Purulia, Manbhum.
60	236	Ray's Indian Diary for 1905	Manimohan Ráy	9-2 and 11, Old Baitakkhána, 1st Lane, Calcutta.
61	337	Domestic Duty	Manmatha Náth Datta	40, Nayan Chánd Datta's Street, Calcutta.
62	122	Baroda Trial	.....,	15, Phakir Chánd De's Lane; 6, Hastings Street; Calcutta.
		PHILOSOPHY.		
63	26	Bibliotheca Indica. New Series. No. 1,100. Tantravártika. The Vártika Commentary on Sávara's Scholium on Mímánsá Aphorisms. Fasc. III. (T.)	Translated by Gangánáth Jha ..	41, Lower Circular Road; 57, Park Street; Calcutta.
		Educational—		
64	173	A Treatise on Psychology	N. C. Banerji, M.A.	46, Bechu Chatterji's Street, Calcutta
		POETRY.		
65	308	A Class-Book of English Poetry. Part I ...	Brajagopál Chatterji	19, Grey Street; 38, Káli Prasád Datta's Street; Calcutta.
66	407	The Fancy Poems	Rájendra Náth Basu	8, Dixon's Lane, Calcutta; Cháibásá ...
		RELIGION.		
67	18	A Comprehensive History of the Religion of the Hindus. Brahmanic Period. Part VI. (H.)	Dhírendra Náth Pál	28, Beadon Row; 10, Narikel Bagan; Calcutta.
68	28	Ditto ditto. Vedantic Period. Part VII. (H).	Ditto	Ditto ditto ...
69	193	The Rig Veda, A History showing how the Phœnicians had their Earliest Home in India. (H).	Rájeswar Gupta	25, Ráybágán Street, Calcutta; Chittagong.
70	42	The Story of the Old Testament. (C) ...	Rev. E. A. Newton	4, Dalhousie Square; Wellington Square Calcutta.
71	276	Christian Endeavour Prayer Meeting Topic and Daily Readings.	Rev. A. E. Summers	41, Lower Circular Road; 135, Dharmatalá Street; Calcutta.
		SCIENCE (MATHEMATICAL).		
		Educational—		
72	185	Arithmetic for the use of Schools and Colleges.	Yádav Chandra Chakravarti	25, Ráybágán Street, Calcutta ...

First Quarter ending 31st March 1905—continued.

6	7	8	9	10	11	12	13
Name or firm of printer and of publisher.	Date of issue from the press or of the publication.	Size and number of sheets, leaves, or pages.	Number of edition and number of copies of which the edition consists.	Printed or litho'd.	Price at which the book is sold to the public.	Name and residence of the proprietor of copyright, or any part of it.	Number and date of Registration of copy right.
	1905.				Rs. A. P.		
Rámna Krishna Dás; Harish Chandra Basu & Co.	Jan. 2	Dy. 12mo; 895	1st; 1,000	P.	2 8 0	.....	
Ditto ditto ...	„ 2	Dy. 12mo; 968	1st; 1,000	P.	2 8 0	.....	
Ditto ditto ...	„ 24	Dy. 12mo; 874	1st; 1,000	P.	2 8 0	.....	
Ditto ditto ...	„ 24	Dy. 12mo; 392	1st; 750	P.	5 0 0	.....	
	1904.						
Ditto ditto ...	Dec. 12	Dy. 12mo; 542	1st; 500	P.	1 8 0	.....	
Sasibhúshan Chakravarti; S. K. Labiri & Co.	„ 30	Rl. 8vo; 572	1st; 2,000	P.	12 0 0	The author, Judicial Commissioner, Chota Nagpur.	No. 3, Register No. 30, dated 28th January 1905.
	1905.						
Jaygopál Dás	Jan. 5	Rl. 8vo; 1,347	4th; 2,000	P.	17 0 0	.....	
Thacker, Spink & Co.	„ 30	Cr. 8vo; 695	6th; 750	P.	10 0 0	.....	
Dhírendra Náth Kar.; R. Cambray & Co.	Mar. 1	Dy. 8vo; 208	1st; 1,000	P.	2 0 0	.....	
G. C. Basu & Co.; Batabyál & Co.	Feb. 3	Dc. 16mo; 68	1st; 50	P.	0 12 0	.....	
S. K. Sáhá; the author	Mar. 2	Dy. 12mo; 98	1st; 2,000	P.	.....	.....	
	1904.						
Isán Chandra Basu; the Universal Press Company.	Dec. 9	Sp.el. 32mo; 224	1st; 1,200	P.	.....	The Universal Press Company, 53, Káilas Basú's Lane, Howrah.	
A. Campbell; the Santal Mission Press.	„ 20	Cr. 8vo; 42	1st; 500	P.	.....	.....	
	1905.						
Ditto ditto ...	Jan. 12	Dy 8vo; 20	1st; 150	P.	.....	.....	
Ditto ditto ...	Feb. 24	Dy. 8vo; 10	1st; 150	P.	.....	.....	
Sarat Chandra Mukherji ...	„ 15	Fc. 8vo; 380	1st; 250	P.	.....	The author, 27, Benares Road, Salkia, Howrah.	
Sányál & Co.; the author ...	Jan. 3	Sp. rl. 8vo; 28	1st; 350	P.	0 14 0	.....	
	1904.						
M. L. Dás	Dec. 26	D.cr. 16mo; 450	1st; 500	P.	1 0 0	.....	
	1905.						
Hari Charan Mánná; the Society for the Resuscitation of the Indian Literature.	Feb. 20	Dy. 8vo; 304	1st; 1,000	P.	2 4 0	.....	
Dhírendra Chandra Kar; R. Cambray & Co.	Jan. 5	Dy. 8vo; 620	1st; 500	P.	4 0 0	.....	
	1904.						
Rev. Percy Knight; the Asiatic Society of Bengal.	Dec. 9	Rl. 8vo; 96	1st; 500	P.	.....	.....	
	1905.						
R. Datta	Jan. 19	D cr. 16mo; 164	2nd; 1,000	P.	1 4 0	.....	
Yogendra Náth Mallik; the author	Jan. 15	Dy. 12mo; 36	6th; 1,000	P.	.....	.....	
B. L. Chakravarti, the author ...	Feb. 13	Dy. 8vo; 58	1st; 500	P.	0 8 0	.....	
	1904.						
J. N. Basu; the author	Dec. 15	Dcr. 16mo; 76	1st; 1,000	P.	1 0 0	.....	
Ditto	„ 20	D.cr. 16mo; 64	1st; 1,000	P.	1 0 0	.....	
	1905.						
Sányál & Co.; Yogendra Mohan Gupta.	Jan. 23	Dy. 8vo; 38	1st; 500	P.	.....	.....	
	1904.						
S. Parrot; the Calcutta School Book and Useful Literature Society.	Dec. 30	Fc. 8vo; 130	1st; 1,000	P.	1 8 0	.....	
	1905.						
Rev. Percy Knight; the author ...	Jan. 6	Dy. 32mo; 17	1st; 1,000	P.	.....	.....	
Sányál & Co.	Jan. 13	D.cr. 16mo; 518	26th; 5,000	P.	1 12 0	.....	

1	2	3	4	5
Serial number.	Registration number.	Title, with an English translation of the same when not in that language, the language of the book, and the subject.	Name of author, translator, or editor of the book or any part of it.	Place of printing and publication.
		ENGLISH BOOKS—concld.		
		SCIENCE (MATHEMATICAL)—*concld.*		
73	357	Algebra. Part I	K. P. Chattaraj	25, Ráybágán Street; 64, College Street; Calcutta.
74	415	Students' Hand-Book of Mathematics ...	Sriharsha Bhattácháryya	62-2-1, Beadon Street, Calcutta ...
75	2171	The Elements of Mental Arithmetic in English and Indian Methods.	P. Ghosh	32-1, Malanga Lane, Calcutta ...
		SCIENCE (NATURAL AND OTHER).		
		Educational—		
76	389	Notes on Inorganic Chemistry	R. N. Chatterji	51, Sánkáritolá Lane; 64, College Street; Calcutta.
77	414	Calcutta University B. A. and B. Sc. Questions in Chemistry with Full Answers (from the year 1895 to 1904).	Hridayranjan Sen	62-2-1, Beadon Street; 54, College Street; Calcutta.
78	115	The Students' Guide to Physics.	Surendra Náth Chatterji	203-2, 25, Cornwallis Street; Calcutta.
		GARO BOOKS.		
		RELIGION.		
1	275	Nama Katarango Sea. Jisu Kristoni Ja pang Kata. "The Bible Union Inductive Course. The Gospel History of Jesus Christ." (T.)	Rev. E. G. Phillips	41, Lower Circular Road, Calcutta; Tura, Assam.
		SCIENCE (MATHEMATICAL).		
		Educational—		
2	273	Chanani Kitap. Bak. I. Practical Arithmetic in Garo. Part I.	E. G. Phillips	Ditto ditto ...
3	274	Gisiko Chanani Kitap. Bak. I. Mental Arithmetic in Garo. Part I.	Mrs. Ditto	Ditto ditto ...
		HINDI BOOKS.		
		ART.		
		Educational—		
1	146	Súchisilpa. Needle-work. (T) ...	Mrs. M. A. C. Moorat	59, Cotton Street, Calcutta ... ...
		BIOGRAPHY.		
2	2104	Rání Bhavání. (Life of) Rání Bhavání ..	Gangá Prasád Gupta	97, Muktárám Bábu's Street, Calcutta.
		DRAMA.		
3	28	Naváv Suánga. The Story of a Nawab ...	Asad Alí	The Arunoday Press, Cuttack ...
		FICTION.		
4	2102	Jívanmrita Rahasya. Mystery of the Living Dead. (T.)	Translated by Gopál Rám ...	97, Muktárám Bábu's Street, Calcutta...
5	87	Adhakhilá Phúl. Half-blown Flower ...	Ayodhyá Sinha Upádhyáy ...	The Khadgavilás Press, Bankipur ...
6	218	Chandra Bhushan. Chakramrita. The Nectar of the Life of Chandra Bhushan. (T).	.....	38-2, Bhavání Charan Dattá's Street, Calcutta.
7	418	Jojeph Vilmat. Joseph Wilmot. No. 1 (T)	Translated by Yasodánandan Akhaurí and Chaturbhuj Audíchya.	62, Cotton Street; 96 and 97, Lower Chítpur Road; Calcutta.
		HISTORY (INCLUDING GEOGRAPHY).		
		Educational—		
8	81	Apar Práimarí Itihás Ká Prasnottar. A Catechism of History for the Upper Primary Course.	Ráj Kesar Sinha	The Khadgavilás Press, Bankipur ...
9	83	Apar Práimarí Bhúgol Ká Prasnottar. A Catechism of Geography for the Upper Primary Course.	Ditto	Ditto ditto ...
		LANGUAGE.		
		Educational—		
10	1	Sisubodh. Instruction for Children. Part I.	Dewákí Nandan Saháy	Matihari ... ...
11	2	Padhnaki Pahilí Pustak. "First Book of Reading."	G. E. L. Mission	Ránchi .. ..
12	90	Bálabodh Ká Prasnottar Aur Kí. A Catechism of, and a Key to, Bálabodh.	Chárn Chandra Ghosh and K. D. Ráy.	The Bihárbandhu Press, Bankipur; Gadi Srirampur, Hazaribagh.

First Quarter ending 31st March 1905—continued.

6	7	8	9	10	11	12	13
Name of firm of printer and of publisher.	Date of issue from the press or of the publication.	Size and number of sheets, leaves, or pages.	Number of edition and number of copies of which the edition consists.	Printed or lithoed.	Price at which the book is sold to the public.	Name and residence of the proprietor of copyright, or any part of it.	Number and date of Registration of copyright.
					Rs. A. P.		
Sányál & Co.; the City Book Society	1905. Jan. 24	D.cr.16mo; 499	3rd; 5,000	P.	1 12 0	.....	
S. K. Sáhá; the author	Feb. 20	Dcr. 16mo; 179	1st; 1,000	P.	.....	.....	
P. Ghosh	1904. Dec. 13	Rl. 16mo; 50	5th; 2,000	P.	0 2 0	.....	
Panchánan Sarkár; the City Book Society.	1905. Feb. 15	D.cr. 16mo; 44	1st; 1,000	P.	0 10 0	.....	
S. K. Sáhá; S. K. Lahiri & Co. ...	„ 16	D.cr. 16mo; 114	1st; 1,000	P.	.....	.....	
Prem Chandra Sáhá; B. Banerji & Co.	1904. Dec. 15	Cr. 8vo; 208	2nd; 1,000	P.	1 0 0	.....	
Rev. Percy Knight; the Garo Mission, American Baptist Missionary Union.	1905. Jan. 18	Cr. 8vo; 102	1st; 1,500	P.	.....	.....	
Ditto ditto ...	Jan. 18	Cr. 8vo; 92	2nd; 5,000	P.	.....	.....	
Ditto ditto ...	„ 18	Cr. 8vo; 52	3rd; 5,000	P.	.....	.....	
Rám Chandra Mandal; the authoress.	1904 Dec. 31	Dy. 12mo; 106	1st; 1,000	P.	0 8 0	The authoress, 3, South Road, Entali, Calcutta.	No. 4. Register No. 31, dated 27th January 1905.
Krishnánanda Sárma ...	Dec. 1	S.Rl. 12mo; 27	1st; 1,500	P.	.....	.....	
N. N. Sáhu	1905. Jan. 31	D.f.c. 16mo; 12	2nd; 1,000	P.	0 1 0	Nityánanda Sáhu, Chaudhuri-bázár, Cuttack.	
Krishnánanda Sarmá	1904. Dec. 1	S.Rl.12mo; 228	1st; 1,500	P.	.....	.....	
Chandí Prasád Sinha	1905. Feb. 5	Dy. 8vo; 176	1st; 500	P.	0 10 0	Rám Rana Vijay Sinha, Khadgavilás Press, Bankipur.	
Nútvihárí Ráy	1904. Aug. 17	D.cr. 16mo; 118	New; 1,500	P.	1 0 0	.....	
Dakshiná Churan Chakravartí; the translators.	1905. Feb. 15	Dy. 8vo; 24	1st; 1,000	P.	0 2 0	.....	
Chandí Prasád Sinha	1904. Dec. 22	Dy. 8vo; 36	1st; 500	P.	0 2 0	Rám Rana Vijay Sinha, Khadgavilás Press, Bankipur.	
Ditto	„ 28	Dy. 12mo; 40	1st; 500	P.	0 2 0	Ditto ditto.	
S. P. Sen; Basu Mitra & Co. ...	1905. Jan. 15	Dy. 12mo; 18	2nd; 3,000	P.	0 1 0	.....	
Rev. Dr. A. Nottrott	Mar. 23	Dy. 12mo; 26	19th; 5,000	P.	0 0 6	.....	
Akhuldl; the authors	Feb. 25	Dy. 12mo; 90	1st; 1,000	P.	0 5 0	The authors, Ráj Schools, Gadi Srirampur, Hazaribagh.	

Serial number.	2 Registration number.	3 Title, with an English translation of the same when not in that language, the language of the book, and the subject.	4 Name of author, translator, or editor of the book, or any part of it.	5 Place of printing and publication.
		HINDI BOOKS—contd.		
		MEDICINE.		
13	1	Homiyopaithik Chikítsá Pranálí. Homœopathic Method of Treatment.	Munsí Ganeshánanda Barmá ...	The Kamalesvar Press, Ránchi ...
14	91	Mahámárí Nidán. Pathology of Plague ...	Rám Krishna Lál Mokhtár ...	The Bihárbandhu Press, Bankipur ...
		MISCELLANEOUS.		
16	2103	Níti Bátiká. A Garden of Morality ...	Lálá Sítárám, B.A.	97, Muktárám Bábu's Street, Calcutta
16	27	Ban Kí Sobhá. "Forest-Beauty" ...	Rám Saháy Lál	Gayá ... ...
17	80	Kavitávali, Tirthamáhátmya, Ráma Stotra Aur Bhajanávalí. A Collection of Poems. Virtue attached to Places of Pilgrimage. Hymns in honour of Ráma and a Collection of *Bhajan* songs.	Bála Mukunda Dás	The Khadgavilás Press, Bankipur ...
		Educational—		
18	25	Patra Pranáli. Letter-Writer. Part I ...	Rám Prasád Mokhtár	Gayá ... ...
		POETRY.		
19	1	Rasik Ranjan. Entertainment for the Witty	Visvanáth Jhá	The Union Press, Dvarbhanga ...
20	2	Rasik Pramod. Pleasing to the Witty ...	Jaypál Mahárájˇ	Ditto ditto ...
		Educational—		
21	74	Sikshá Latá. Creeper of Instruction. (T)	Rám Bhajan Chaube	The Bihárbandhu Press, Bankipur; Muzaffarpur.
		POLITICS.		
		Educational—		
22	86	Hindusthán Kí Prajá Ke Karttavya Karma. "Hindi Citizen of India." (T).	Sir W. Lee Warner, K.C.S.I., M.A. ...	46, Bechu Chatterji's Street; 7, New China Bázár Street; Calcutta.
		RELIGION.		
23	38	Gít Pustak. "Hymn Book." (C) ...	Rev. Father A. Norhoustraeten, S. J.	4, Portuguese Church Street, Calcutta
24	249	Nischit Bhavishyatvání. "The Sure Word of Prophecy." (C).	B. N. Mitrá	38; 39-1, Free School Street, Calcutta
25	250	Dharma Pustak Me Dhúndo. Search the Scriptures.	Ditto	Ditto ditto ...
26	279	Sarvatra Sástra Path Niyam. The Rules for the Universal Gospel Reading. For 1905. (C.)	I. S. S. Union	41, Lower Circular Road; 186, Dharmatalá Street; Calcutta.
27	2101	Rása Panchádhyáyí Aur Bhanvar Gít. A Book containing the Five Chapters on the Rása Sports and Songs addressed to the Bee. (H.)	Kavivar Nanda Dás	97, Muktárám Babu's Street; Calcutta
28	28	Chhappai Ráma Ratnamálá. Garland of Jewels in Honour of Ráma in the *Chhappai* Metre.	Naurangadeva Náráyan Sinha ...	Gayá ... ...
29	29	Srí Ráma Lílá Upades. Teachings of the Acts of Ráma.	Ráma Saháy Lál	Do. ... ...
30	75	Mánas Mayanka. Bála Kánda. The Mánas Rámáyan. Bála Kánda. (With notes.)	Edited by Indra Deva Náráyan ...	The Khadgavilás Press, Bankipur
31	76	Ditto ditto. Avadh Kánda. Ayodhyá Kánda. (With notes.)	Ditto ditto ...	Ditto ditto ...
32	77	Ditto ditto. Bana Kánda. (With notes).	Ditto ditto ...	Ditto ditto ...
33	78	Ditto ditto. Kiskindhyá Kánda. (With notes.)	Ditto ditto ...	Ditto ditto ...
34	79	Ditto ditto. Sundará Kánda. (With notes.)	Ditto ditto ...	Ditto ditto ...
35	88	Ditto ditto. Lanká Kánda. (With notes)	Ditto ditto ...	Ditto ditto ...
36	89	Ditto ditto. Uttara Kánda. (With notes.)	Ditto ditto ...	Ditto ditto ...
37	213	Premságar. Sea of Love. (R.)	Lalla Lál	38-2, Bhavání Charan Datta's Street, Calcutta.
38	229	Tulasí Dás Jí ko Granthávalí. Works by Tulasí Dás. (R.)	Tulasí Dás	Ditto ditto ...
39	307	Mahábhárat. The Mahábhárata, from Adi to Virát Parva. (T.)	.....	117-1, Bowbázár Street, Calcutta.

First Quarter ending 31st March 1905—continued.

6 Name or firm of printer and of publisher.	7 Date of issue from the press or of the publication.	8 Size and number of sheets, leaves, or pages.	9 Number of edition and number of copies of which the edition consists.	10 Printed or lithog'd.	11 Price at which the book is sold to the public.	12 Name and residence of the proprietor of copyright, or any part of it.	13 Number and date of Registration of copy right.
	1905.				Rs. A. P.		
Dváraká Nath; the author ...	Jan. 28	Dy. 8vo.; 218	1st; 1,000	P.	1 0 0	The author, Ránchi ..	No. 5. Register No. 34, dated 1st February 1905.
Aklu Lál	Feb. 25	Dy. 8vo.; 44	1st; 1,000	P.	0 5 0	The author, Bankipur.	
	1904.						
Krishnánanda Sarmá	Dec. 1	S. Rl. 12mo; 102	1st; 1,500	P.	.....	.....	
	1905.						
Haribar Prasád	Jan. 27	Dy. 8vo.; 4	1st; 1,000	P.	0 0 6	.....	
	1904.						
Chandí Prasád Sinha	Dec. 20	Dy. 8vo.; 68	1st; 1,000	P.	0 4 0	Rám Rána Vijay Sinha, Khadgavilás Press, Bankipur.	
Haribar Prasád; the author ...	„ 16	Dy. 8vo.; 66	2nd; 2,000	P.	0 4 0	.....	
	1905.						
Kánta Vihárí Misra	Feb. 6	Dy. 8vo.; 64	1st; 1,000	P.	0 4 0	.....	
Ditto	„ 21	Dy. 8vo.; 78	1st; 1,000	P.	0 6 0	.....	
	1904.						
Aklu Lál; Rám Dás Ráy ...	Dec. 12	Rl. 8vo.; 74	1st; 1,000	P.	0 8 0	The publisher, Head Master, M. E. School, Muzaffarpur.	No. 6. Register No. 1, dated 3rd January 1905.
R. Datta; Macmillan & Co. ...	„ 18	D. cr. 16mo; 224	2nd; 2,500	P.	0 8 0	.....	
M. Apel; the Catholic Orphan Press	Dec. 22	F'cap. 8vo.; 30	1st; 5,000	P.	0 8 0	.....	
A. G. Watson; the International Tract Society.	„ 19	D. cr. 16mo; 5	1st; 5,000	P.	.....	.....	
Ditto ditto ...	„ 19	D. cr. 16mo; 5	1st; 5,000	P.	.....	.....	
	1905.						
Rev. Percy. Knight; the I. S. S. Union.	Jan. 13	Dy. 12mo; 20	1st; 1,300	P.	.....	.....	
	1904.						
Krishnánanda Sarmá	Dec. 1	S. Rl. 12mo; 40	1st; 1,500	P.	.....	.....	
	1905.						
Haribar Prasád	Jan. 28	Dy. 12mo; 47	1st; 1,000	P.	.....	.....	
Ditto	Feb. 15	Dy. 12mo; 12	1st; 1,000	P.	.....	.....	
	1904.						
Chandí Prasád Sinha ..	Dec. 20	Rl. 8vo; 228	1st; 1,000	P.	1 0 0	Rám Rana Vijay Sinha, Khadgavilás Press, Bankipur.	
Ditto ...	„ 20	Rl. 8vo; 194	1st; 1,000	P.	0 12 0	Ditto ditto.	
Ditto ...	„ 20	Rl. 8vo; 54	1st; 1,000	P.	0 4 0	Ditto ditto.	
Ditto ..	„ 20	Rl. 8vo; 135	1st; 1,000	P.	0 8 0	Ditto ditto.	
Ditto ...	„ 20	Rl. 8vo; 59	1st; 1,000	P.	0 4 0	Ditto ditto.	
	1905.						
Ditto ...	Jan. 25	Rl. 8vo; 160	1st; 1,000	P.	0 12 0	Ditto ditto.	
Ditto ...	„ 26	Rl. 8vo; 220	1st; 1,000	P.	1 0 0	Ditto ditto.	
	1904.						
Nút Vihárí Ráy	Aug. 17	Cr. 8vo; 464	New; 2,000	P.	3 0 0	.....	
Ditto ...	„ 17	Dy. 8vo; 148	1st; 2,000	P.	2 0 0	.....	
Rámánáth Pán; Sarachchandra Som.	Feb. 1	S. Rl. 8vo; 952	2nd; 2,000	P.	10 0 0	.....	

1	2.	3	4	5
Serial number.	Registration number.	Title, with an English translation of the same when not in that language, the language of the book, and the subject.	Name of author, translator, or editor of the book, or any part of it.	Place of printing and publication.
		***HINDI BOOKS*—concld.**		
		SCIENCE (MATHEMATICAL).		
		Educational—		
40	2129	Sisu Ganit. Arithmetic for Children.	Haradeva Sinha	59, Cotton Street, Calcutta; Chakradharpur, Singbhum.
		JAUNSARI BOOKS.		
		RELIGION.		
1	2113	Mark Rachita Susamáchár. "The Gospel of Mark." (C.) (T.)	Rev. T. S. Wynkoop	41, Lower Circular Road, Calcutta; Allahabad.
		PERSIAN BOOKS.		
		LANGUAGE.		
		Educational—		
1	245	Sahlámúz-i-Phársí. "An Easy Persian Instructor." Part II.	Agá Mahammad Kázim Shírází ...	92, Harrison Road, Calcutta... ...
		SANSKRIT BOOKS.		
		LANGUAGE.		
1	2114	Bibliotheca Indica. New Series. No. 1101. Mahábháshya Pradípodyotan. The Illuminator of the Lamp of the Great Scholium. Vol. II. Fasc. XII. (R.)	Edited by Bahuvallabha Sástrí ...	41, Lower Circular Road; 57, Park Street; Calcutta.
2	314	Ditto ditto. New Series. No. 1105. Vol. III. Fasc. I.	Ditto ditto ...	Ditto ditto ...
		Educational—		
3	129	Mugdhabodham Vyákaranam. A Grammar for the Edification of the Ignorant.	Syámá Charan Kaviratna... ..	2, Goábágán Street; 201, Cornwallis Street; Calcutta.
4	205	Hitasáram. Essence of Good Instruction	Aghar Chandra Kávyatírtha Vidyáratna.	45, Benetolá Street; 12, Cornwallis Street; Calcutta.
5	238	Nava-Hitapátham. New Moral Reader ...	A. K. Vidyánidhi	28, Beadon Row, Calcutta; Dacca ...
		LAW.		
6	2137	Dáya Kaumudí. Moonlight of Inheritance. (R).	Ramanáth Gosvámí Vidyálankar ...	20, Malanga Lane, Calcutta ... ...
7	2176	Dattak Chandriká. Moonlight of Adoption. (R).	... ..	133, Masjidbari Street; 11-1, Garánhátá Street; Calcutta.
		MISCELLANEOUS.		
8	123	Panchánga Suddhivivekah. A Discourse on the Reform of Hindu Almanac.	Pandit Panchánan Sáhityáchárryya	119, Old Baitakkhánd Bázár Road; 15, Rámakánta Basu's Lane, Calcutta.
		PHILOSOPHY.		
9	88	Vedánta Samanvayah. The Harmony of the Vedántas. Vol. VII. (R.)	Edited by Gaur Govinda Ráy Upadhyáya.	3, Ramánáth Majumdár's Street, Calcutta.
10	2115	Bibliotheca Indica. New Series. No. 1098. Sata Dúshaní. A Work containing One Hundred Criticisms. Vol. I. Fasc. II. (R).	Hon'ble Rai P. Ananda Chárlu Vidyávinod, Visárda Bahadur.	41, Lower Circular Road; 57, Park Street; Calcutta.
11	282	Ditto ditto. New Series No. 1103. Sataśhasrikd Prajnápáramitá. One Hundred thousand Sútras on the Attainment of the Bounds of Knowledge. Part I. Fasc. IX. (R.)	Edited by Pratáp Chandra Ghosh ...	Ditto ditto ...
12	2160	Tattva Kaumudi. The Moonlight of Truths. (R.)	Edited by Krishnanáth Nyáyapanchánan.	24, Giris Vidyáratna's Lane; 30, Cornwallis Street; Calcutta.
		POETRY.		
13	5	Kedár Satakam. One Hundred Slokas by one Kedár Náth Dev.	Kedár Náth Dev	Burdwan ... ...
14	174	Srí Rádhámádhav Vilás. Sports of Radhiká and Srí Krishna.	Akshayakata Misra	63, Cotton Street, Calcutta ... ...
		RELIGION.		
15	24	Sráddha Paddhatih. Ritual of Srád Ceremony. (R.)	Sarvesvar Achárryya	The Cuttack Printing Co.'s Press, Cuttack.
16	40	Annapúrná Stotram. Hymns in honour of the Goddess Annapurná (Durgá). (R).	Vaidyanáth Pándá	The Darpanráj Press, Cuttack ...
17	42	Káli Karpura Stotram. The Well-known Hymn in honour of the Goddess Káli beginning with the word Karpura.	Edited by Jayarám Pandá ...	Ditto ditto ...

First Quarter ending 31st March 1905—continued.

6	7	8	9	10	11	12	13
Name of firm of printer and of publisher.	Date of issue from the press or of the publication.	Size and number of sheets, leaves, or pages.	Number of edition and number of copies of which the edition consists.	Printed or lithod.	Price at which the book is sold to the public.	Name and residence of the proprietor of copyright, or any part of it.	Number and date of Registration of copy right.
Rám Chandra Mandal; the author	1904. Dec. 1	Dy. 8vo; 80	1st; 2,000	P.	Rs. A. P. 0 1 6	.....	
Rev. Percy Knight; the North India Bible Society.	Nov. 22	Cr. 8vo; 60	1st; 1,000	P.	0 0 3	.....	
Majid Ali	1905 Jan. 27	Dy. 8vo; 32	1st; 500	L.	0 5 0	The author, 26, Mangoe Lane, Calcutta.	No. 7. Register No. 36, dated 6th February 1905.
Rev. Percy Knight; the Asiatic Society of Bengal.	1904. Nov. 30	Dy. 8vo; 112	1st; 500	P.	.....	.....	
Ditto ditto ...	1905. Jan. 31	Dy. 8vo; 96	1st; 500	P.	.....	.....	
Tárini Charan As; Gurudás Chatterji.	„ 1	Dy 12mo; 276	1st; 2,000	P.	0 6 0	.....	
Susibhúshan Chakravarti; G. C. Chakravarti.	1904. Dec. 27	D.fc. 16mo; 48	1st; 500	P.	0 4 0	.....	
J. N. Basu; S. C. Chatterji ...	1905. Jan. 5	Dfc. 16mo; 64	1st; 2,280	P.	0 5 0	.....	
K. P. Mukherji	1904. Dec. 20	Rl. 8vo; 31	1st; 1,000	P.	0 8 0	.....	
Yogendra Náth Chakravarti; Chandí Charan Smritibhúshan.	„ 29	Dy. 8vo; 19	1st; 500	P.	0 8 0	.....	
J. N. Banerji & Sons; Rádháballabh Siddhántavágís.	Dec 23	Rl. 12mo; 31	1st; 50	P.	.....	.....	
K. P. Náth; K. C. Mitra and T. Gánguli.	1905. Jan. 8	Rl. 8vo; 64	1st; 540	P.	0 8 0	.....	
Rev. Percy Knight; the Asiatic Society of Bengal.	1904. Nov 25	Dy. 8vo; 144	1st; 500	P.	.....	.....	
Ditto ditto ...	1905. Jan. 6	Dy. 8vo; 96	1st; 500	P.	.....	.....	
Susibhúshan Bhattácháryya; the editor.	1904. Nov. 22	Dy. 8vo; 220	1st; 1,000	P.	1 8 0	The editor, Purvasthali.	No. 8. Register No. 29, dated 16th January 1905.
Natavar Datta; the author ...	1905. Feb. 27	Dy. 8vo; 31	2nd; 2,000	P.	0 2 0	The author, Burdwan.	
D. C. Chakravartí; Rudhamallaji Goenká.	1904. Dec. 24	Dy. 8vo; 66	1st; 1,000	P.	.....	.....	
Bhágírathí Sáhiyá; the Cuttack Printing Company.	1905. Jan. 18	Fc 8vo; 21	2nd; 1,000	P.	0 2 0	The author, Benkar, Cuttack.	
Adam Samuel; the author ...	Feb. 2	Dy. 16mo; 3	1st; 1,000	P.	0 0 6	The author, Bhubanpur, Cuttack.	
Ditto ...	„ 2	Dy. 16mo; 6	1st; 1,000	P.	0 1 0	.....	

1 Serial number.	2 Registration number.	3 Title, with an English translation of the same when not in that language, the language of the book, and the subject.	4 Name of author, translator, or editor of the book, or any part of it.	5 Place of printing and publication.
		***SANSKRIT BOOKS*—concld.**		
		RELIGION—*concld.*		
18	3	Bhakti Mímánsá. A Dissertation on BHAKTI (Devotion to God.)	Chetnath Sarmá	Dvarbhángá ... ...
19	366	Tantra Kalpadrumah. The Tree of Tantra that fulfils all Desires. Vol. VII. (R.)	Edited by Nílakamal Banerji ...	2, Goábágán Street, Calcutta; D 24-6, Gangá Mahallá, Vángálitolá, Benares.
20	369	Bibliotheca Indica. New Series. No. 1106. Suddhi Kaumudí. Moonlight of Purification. Fasc. II. (R.)	Edited by Kamalakrishna Smritibhúshan.	62, Amherst Street; 57, Park Street, Calcutta.
21	2123	Ditto ditto. New Series. No. 1102. Chaturvarga Chintámanih. The *Chintámani* Jewel of Chaturvarga (or the Four Objects of Existence). Vol. IV. Fasc. III. (R.).	Edited by Pramathanáth Tarkabhúshan.	24, Girís Vidyáratna's Lane; 57, Park Street; Calcutta.
22	445	Ditto ditto. New Series. No. 1107. Vidhána Párijáta. The Párijáta flower of Religious Injunctions. Vol. I. Fasc. VII. (R).	Táráprasanna Vidyáratna ...	Ditto ditto ...
		URDU BOOKS.		
		POLITICS.		
		Educational—		
1	119	Tamaddún-i-Hind. Citizen of India. (T.)	.....	41, Lower Circular Road; 9, New China Bazar Street; Calcutta.
		MISCELLANEOUS.		
2	295	Haft Mújezá. The Seven Miracles ...	Sháker Ali	92, Harrison Road, Calcutta ... ...
		URIYA BOOKS.		
		DRAMA.		
1	6	Amviká Devi Nátak. Drama about the Story of Amviká Devi. (A Name.)	Víra Vikram Deva	The Edward Press, Cuttack; Khariál, Central Provinces.
2	10	Utkal Durddasá Nátak. Drama about the Deplorable Condition of Orissa.	Ditto	Ditto ditto ... ...
3	12	Kelá Keluní O Rághabá Suánga. Drama about the Story of Kelá, Keluni and Rághabá. (Three names.)	Bhikárí Náyak	The Arunoday Press, Cuttack ...
4	47	Lakshmí Lákhavindá Suánga. Drama describing the Shooting of the Mark for the hand of Lakshmí (the goddess of prosperity).	ditto	Ditto ditto ... ...
5	52	Raghu Arakshit Suánga. Drama about the Story of the poor Raghu.	Bandhu Náyak	Ditto ditto ... ...
6	53	Kíchak Badh Suánga. Drama on the Slaying of Kíchaka. (Name of a Person.)	Balarám	Ditto ditto ... ...
7	58	Sulochaná Haran Suánga. Drama on the Abduction of Sulochaná. (A Name.)	Bandhu Náyak	Ditto ditto ...
8	62	Báhájí Bhálu Suánga. Drama about the Story of an Ascetic and a Bear.	Mádhava	Ditto ditto ... ...
		HISTORY (INCLUDING GEOGRAPHY).		
9	64	Hindol Killár Samkshipta Bhaugolik O Aitihásik Vivaran Evan Durgará Prákritik Drisya. An Abridged Geographical and Historical Account of the Fort at Hindol and its Natural Scenery.	Rájá Janárddan, Sinha Marddaráj Jagadeva.	The Utkal Sáhitya Press; Hindol; Cuttack.
		MEDICINE.		
10	54	Modakárnava. Ocean of *Modakas* (Medicinal Pills). (H.)	Phakir Tripáthi	The Arunoday Press; Dewanbázár; Cuttack.
		MISCELLANEOUS.		
11	72	Chaupadí Ságurah. Sea of *Chaupadi* Verses	Banamálí and others	The Jagannath Press, Puri ... ...
12	177	Sim Sásan. Discipline of Boys ...	Bhagaván Sántrá	The Darpan Ráj Press; Sutáhát; Cuttack.
13	278	Dákgharara Sabins Byánkare Tanká Amánatkárí Mánanka Nimitta Vidhánávali. O Gabarnamenta Sikyuriti Kray Vikray O Hepházatare Rakhibá Vishayak Vidhánávalí. Rules for the Depositor of Money in Postal Savings Banks, and those about the Purchase, Sale and good Custody of Government Securities.	.....	41, Lower Circular Road, the General Post Office; Calcutta.
		POETRY.		
14	178	Sítá Viláp. Lamentation by Sítá ...	Gadádhar Sáhu	The Darpan Ráj Press, Cuttack ...
15	179	Agata Bhavishya Vá Hari Arjuna Chautisá. Coming future or (Conversation) in Thirty-four Verses between Hari (Krishna) and Arjuna.	Jay Krishna Dás	Ditto ditto ... ...
16	5	Náva Kelí. The Boat Sport	Dína Krishna Dás	The Edward Press; Jagannathballabh; Cuttack.
17	41	Ditto ditto	Ditto	The Arunoday Press, Cuttack ...

First Quarter ending 31st March 1905—continued.

6	7	8	9	10	11	12	13
Name or firm of printer and of publisher.	Date of issue from the press or of the publication	Size and number of sheets, leaves, or pages.	Number of edition and number of copies of which the edition consists.	Printed or Lithed.	Price at which the book is sold to the public.	Name and residence of the proprietor of copyright, or any part of it.	Number and date of registration of copyright.
	1905.				Rs. A. P.		
Kánta Behári Misra	Feb. 27	Dy. 8vo; 20	1st; 1,000	P.	.....	.....	
Tárini Charan Ás; B. M. Banerji ...	„ 2	Dy. 8vo; 75	1st; 1,000	P.	1 8 0	.....	
Upendra Náth Chakravarti; the Asiatic Society of Bengal.	„ 21	Dy. 8vo; 96	1st; 500	P.	0 6 0	.....	
	1904.						
Sasibhúshan Bhattacháryya; the Asiatic Society of Bengal.	Dec. 16	Dy. 8vo; 96	1st; 500	P.	0 6 0	.....	
	1905.						
Ditto ditto ...	Mar. 15	Dy. 8vo; 96	1st; 800	P.	0 6 0	.....	
Rev. Percy Knight; Messrs. Macmillan & Co.	Jan. 12	Cr. 8vo; 304	1st; 3,000	P.	0 8 0	.....	
Majid Ali	„ 28	Dy. 8vo; 16	1st; 500	L.	0 1 0	.....	
	1904.						
A. K. Ghosh; the author ...	Dec. 28	Dy. 12mo; 31	1st; 500	P.	.....	The author, Kharial, Central Provinces.	
Ditto ditto... ...	„ 28	Dy. 12mo; 34	1st; 1,000	P.	.....	Ditto ditto.	
	1905.						
Bhágavat Prasád Dán; Janárdan Sáhu.	Jan. 6	D.fc. 16mo; 14	4th; 1,000	P.	0 1 0	The publisher, Cuttack.	
N. N. Sáhu	Feb. 14	Dy. 12mo; 21	2nd; 1,000	P.	0 1 6	Nityánanda Sáhu, Chaudhuri Bázár, Cuttack.	
N. N. Sáhu; Bhágavat Prasád Dán	„ 21	Dy. 12mo; 12	2nd; 1,000	P.	0 1 0	The publisher, Dewanbázár, Cuttack.	
Ditto ditto	„ 21	Dy. 12mo; 14	2nd; 1,000	P.	0 1 3	Ditto ditto ...	
N. N. Sáhu	„ 27	Dy. 12mo; 21	3rd; 1,000	P.	0 1 6	Nityánanda Sáhu, Chaudhuri Bázár, Cuttack.	
N. N. Sáhu; Mádhav Chándra Dán	Mar. 8	Dy. 12mo; 15	2nd; 1,000	P.	0 1 6	Mádhab Chandra Dán, Dewánbázár, Cuttack.	
Visva Náth Kar; the author ...	Mar. 10	Dy. 12mo; 56	1st; 1,000	P.	.....	The author, Hindol, Cuttack.	
N. N. Sáhu; Bhágavat Prasád Dán	Feb. 21	Dy. 12mo; 39	4th; 1,000	P.	0 3 0	The publisher, Dewanbázár, Cuttack.	
Gopi Náth Misra	Feb. 19	Dy. 12mo; 44	2nd; 1,000	P.	0 2 0	Sudarsan Nanda, Puri Town, Puri.	
	1904.						
Adam Samuel; the author ...	Dec. 2	Dy. 12mo; 12	2nd; 400	P.	0 1 0	The author, Sutáhát, Cuttack.	
	1905.						
Rev. Percy Knight; the Post Master-General.	Jan. 7	D.cr. 16mo; 38	1st; 5,000	P.	.....	.....	
	1904.						
Adam Samuel; Gadádhar Sáhu and Vinod Sáhu	Dec. 6	Dy. 16mo; 10	3rd; 1,000	P.	0 0 6	The author, Alamchándbazar, Cuttack.	
Adam Samuel; Siva Charan Ás; Rapha Dás, Gadádhar Satapathi and Vinod Sáhu.	„ 9	Dy. 16mo; 8	1st; 2,000	P.	0 0 6	The author, Joranda, Dhenkánál, Cuttack.	
A. K. Ghosh; Sridhar Ráo ...	„ 16	D.fc. 16mo; 11	6th; 1,000	P.	0 1 3	The publisher, Jagannáthballabh, Cuttack.	
	1905						
N. N. Sáhu; Bhágavat Prasád Dán	Feb. 14	D.fc. 16mo; 14	4th; 1,000	P.	0 0 6	The publisher, Dewánbázár, Cuttack.	

1 Serial number.	2 Registration number.	3 Title, with an English translation of the same when not in that language, the language of the book, and the subject.	4 Name of author, translator, or editor of the book, or any part of it.	5 Place of printing and publication.
		URIYA BOOKS—contd.		
		POETRY—*contd.*		
18	16	Alankár Boli. Verses on Ornaments ...	Dína Krishna Dás	The Arunoday Press; Dewanbázár; Cuttack.
19	17	Upahár Pushpánjali. Offering of Palmful of Flowers.	Ghanasyám Misra Kavibhúshan ...	The Cuttack Printing Co's. Press, Cuttack.
20	19	Gopí Bháshá. Sayings of the Milk-maids (of Vrindávan).	Danái Dás	The Darpan Ráj Press, Cuttack ...
21	20	Bajár Boli. The Market Colloquy ...	Upendra Bhanja	Ditto ditto ... ...
22	26	Abhimanyu Badh. Slaying of Abhimanyu (A Name).	Rájkisor Mahánti	The Utkal Sáhitya Press, Bálubazar, Cuttack.
23	27	Thak Puráns. Stories of (two) Swindlers...	Chintámani Praharáj	The Arunoday Press, College Lane; Cuttack.
24	32	Sásu Bohú Kali. Quarrel between a Mother-in-law and a Daughter-in-law.	Hara Mohan Chandra Datta ...	The Arunoday Press; Jagannáthballabh; Cuttack.
25	38	Bá Chantisá O Ágata Bhavishya. Thirty-four Verses with the word *Bá* (A particle of Doubt) occurring at the end of the every second line of a stanza and the Coming Future.	Karan	The Darpan Ráj Press; Alam Chánd Bázár; Cuttack.
26	39	Kaliyuga Chautisá O Ágata Bhavishya. Thirty-four Verses on the Kali Era and the Coming Future.	Khagendra	The Darpan Ráj Press, Cuttack ...
27	55	Chá. Ichhávatí. Girl Ichhávatí ...	Banamálí Dás...	The Arunoday Press; Dewanbázár; Cuttack.
28	59	Manohar Chintámani. Nice Jewel of Thought. Part I.	Saiyad Umar Alí	Ditto ditto ...
29	70	Nilávatí Sok. Lamentation by Nilávatí. (A Name).	Máguni Náyak	The Jagannáth Press, Puri; Sukar Padá, Cuttack.
30	71	Manabodh Chautisá. Thirty-four Verses for the Edification of the Mind.	Bhikárí Dás	The Jagannáth Press, Puri ... ...
31	74	Jemádei Rodan. Weeping of Jemá Devi ...	Hari Dás	Ditto ditto ... ...
		RELIGION.		
32	7	Bokhári Sáhebanka Janán. Prayers in Honour of the Pir Bokhári Sáheb. Part I.	Sekh Abdul Aziz	The Edward Press; Bázár; Cuttack
33	9	Bhak i Saugítahára. Garland of Songs of Devotion. Part I.	Jagannáth Pandá	The Edward Press; Káthpadá; Cuttack
34	11	Sáralá, Vimalá, Mangalá, Charchchiká O Biriyánka Stuti. Hymns in Honour of the Goddesses Sáralá, Vimalá, Mangalá, Charchchiká and Biriyá.	Gauránga Mahápátra	The Edward Press; Alam Chánd Bázár; Cuttack.
35	13	Hanu Arjun Kali O Tulasi Pújá Phal O Srirám Sok. Quarrel between Hanumán and Arjuna. Meri of Worshipping the Tulasi plant and Lamentation by Ráma.	Krishna Dás and others	The Arunoday Press; Jagannáthballabh; Cuttack.
36	14	Srímadbhágavat Vijnán. Knowledge of the Srímadbhágavat (Book of the Lord).	Jagannáth Dás	The Utkal Sáhitya Press; Balubázár; Cuttack.
37	18	Mahímandal Gítá. Lays about the World ...	Arakshita Dás	The Cuttack Printing Company's Press, Cuttack.
38	23	Jarán Bhajan. Prayers and Hymns ...	Agani Ráut	The Darpan Ráj Press; Sankarpur Cuttack.
39	29	Upanishat Sangraha. A Collection of the Upanishads. (T).	Translated by Phakír Mohan Senápati.	The Utkal Sáhitya Press, Bálubázár, Cuttack.
40	30	Lákhavindhá. Shooting the Mark ...	Bhágírathí Sathiyá	The Arunoday Press; Alamchánd Bázár; Cuttack.
41	31	Bhramarahara Pálá. The Story of Bhramarahara (A Name).	Bhrigurám	The Arunoday Press; Dewanbázár; Cuttack.
42	35	Virát Gíta. The enlarged Gítá	Balarám Dás	The Cuttack Printing Company's Press, Cuttack.
43	37	Mriguní Stuti. Hymns by a She-Deer ...	Sasi Bhúshan Ráy	The Utkal Sáhitya Press, Balubázár, Cuttack.
44	43	Srí Jnána Tíká Bhágavat. Knowledge about the Abridged *Bhágavat* (Book of the Lord).	Balarám Dás	The Darpan Ráj Press, Cuttack ...
45	44	Lakshman Sakti. Lakshman pierced with the Javelin	Vrindávan Náyak	Ditto ditto ... ...
46	46	Prabháta Avakása. Morning Recreation ...	Dína Krishna Dás and others ...	The Arunoday Press; Dewanbázár; Cuttack.
47	49	Mahá Práyaschitta. The Great Atonement. (T). (C).	Translated by Samson Chandra Das, B.A.	The Orissa Mission Press, Cuttack ...
48	51	Trinath Melá. Fair in Honour of the Three Lords.	Pítavás	The Arunoday Press; Dewanbázár; Cuttack.
49	56	Srí Vipad Bhanjan Chautisá Srí Yodá Linganka Janán O Manoranjan Chaupadí. Thirty-four Verses in Honour of the Rescuer of the Distressed, Prayers in Honour of Yodá Linga (Siva) and a Beautiful Four-footed Stanzas.	Jagannáth Mahánti ...	The Arunoday Press; Puri; Cuttack ...
50	68	Vraja Vilap O Gopí Vilap. Lamentation at Vraja and Lamentation by Milk-maids.	Dína Krishna	The Arunoday Press; Sutáhát; Cuttack
51	65	Trinath Melá. Fair in Honour of the Three Lords.	Pítavás	The Darpan Ráj Press, Cuttack ...
52	67	Samsár Sár Gítá. Lays about the Essence of the Universe.	Sádhu Dás	The Arunoday Press; Bánkábázár; Cuttack.
53	75	Gaja Nistárau. Rescue of the Elephant ...	Jagannáth Dás	The Jagannáth Press, Puri ... ...

First Quarter ending 31st March 1905—continued.

6	7	8	9	10	11	12	13
Name or firm of printer and of publisher.	Date of issue from the press or of the publication.	Size and number of sheets, leaves, or pages	Number of edition and number of copies of which the edition consists.	Printed or lithed.	Price at which the book is sold to the public.	Name and residence of the proprietor of copyright, or any part of it.	Number and date of registration of copyright.
					Rs. A. P.		
N. N. Sáhu; Mádhav Chandra Dán	1905. Jan. 18	D.fc. 16mo; 12	3rd; 1,000	P.	0 0 6	The publisher Dewánbázár, Cuttack.	
Bhágírathí Sáthiyá	1904. Dec. 27	Dy. 16mo; 10	1st; 1,500	P.	...	The author, Tálcher, Cuttack.	
Adam Samuel; Arata De ...	„ 28	Dy. 12mo; 9	3rd; 1,000	P.	0 0 9	.....	
Ditto ditto	„ 28	Dy. 32mo; 8	2nd; 1,000	P.	0 0 6	.....	
Visva Nath Kar; Sadánanda Chanda Muktár.	1905. Jan. 27	D.fc. 16mo; 39	1st; 1,000	P.	0 3 0	Ráj Kisor Mahánti, Bhadrak.	
N. N. Sáhu; the author	„ 31	D.fc. 16mo; 48	1st; 1,000	P.	0 4 0	The author, College Lane, Cuttack.	
Ditto ditto	Feb. 3	Rl. 32mo; 10	1st; 1,000	P.	0 0 6	The author, Jagannáthballabh, Cuttack.	
Adam Samuel; Gadádhar Sáhu ...	„ 1	Rl. 32mo; 10	2nd; 1,000	P.	0 0 6	.....	
Adam Samuel; Gadádhar Sáhu and Ananda Sáhu.	„ 1	Rl. 32mo; 16	1st; 1,000	P.	0 0 9	The author.	
N. N. Sáhu; Bhágavat Prasád Dán	„ 23	Dy. 12mo; 28	3rd; 1,000	P.	0 2 0	The publisher, Dewánbázár, Cuttack.	
N. N. Sáhu; Munsí Sekh Abdul Hákim.	„ 27	Dy. 12mo; 20	1st; 1,000	P.	0 1 6	Ditto ditto.	
Gopí Náth Misra; the author ..	„ 7	Dy. 16mo; 6	1st; 1,000	P.	0 0 6	The author, Sukar Pad, Cuttack.	
Gopí Náth Misra; Arata De ...	„ 7	Dy. 32mo; 16	6th; 1,000	P.	0 0 6	Arata De, Puri.	
Gopí Náth Misra; Madhu Súdan Misra.	„ 24	Dy. 16mo; 8	1st; 1,000	P.	0 0 6	Sudarsan Nanda, Puri.	
A. K. Ghosh; the author ...	1904. Dec. 25	Dy. 12mo; 13	1st; 1,000	P.	0 1 0	The author, Bálubázár, Cuttack.	
Ditto ditto	„ 27	D.fc. 16mo; 43	1st; 500	P.	0 3 0	The author, Káthpadá, Cuttack.	
Ditto ditto	1905. Jan. 3	Dy. 16mo; 8	2nd; 1,000	P.	0 0 9	The author, Alamchánd Bázár, Cuttack.	
N. N. Sáhu; Bhágavat Sáhu ...	„ 6	Dy. 12mo; 12	1st; 1,000	P.	0 1 0	The publisher, Jagannáthballabh, Cuttack.	
Visva Nath Kar; Kásí Nath Pandá and others.	„ 12	D.fc. 16mo; 7	1st; 1,000	P.	0 1 0	The publishers, Cuttack.	
Bhágírathí Sáthiyá; the Purán Prakásak Company.	1904. Dec. 31	D.fc. 16mo; 58	1st; 1,000	P.	0 3 0	Dámodar Sámantará, Bholámiyán Bázár, Cuttack.	
Adam Samuel; Agani Ráut ...	„ 28	Rl. 32mo; 10	1st; 1,000	P.	0 0 6	The author, Sankarpur, Cuttack.	
Visva Nath Kar	1905. Feb. 2	D.fc. 16mo; 134	1st; 500	P.	0 3 0	The translator, Bákhrávád, Cuttack.	
N. N. Sáhu; Bhágírathí Sáthiyá ...	„ 3	Dy. 12mo; 24	6th; 1,000	P.	0 2 0	The publisher, Alamchánd Bazar, Cuttack.	
N. N. Sáhu; Abhinna Chandra Dán	„ 3	Dy. 12mo; 26	4th; 1,000	P.	0 2 0	The publisher, Dewánbázár, Cuttack.	
Bhágírathi Sáthiyá; Sudarsan Nanda.	„ 2	Dy. 12mo; 30	1st; 1,000	P.	0 3 0	Sudarsan Nanda, Puri.	
Visva Nath Kar	„ 13	Rl. 32mo; 12	4th; 1,000	P.	0 0 6	The author, Kálugali, Cuttack.	
Adam Samuel; Kásí Náth Pandá and others.	Jan. 16	D.fc. 16mo; 27	1st; 1,000	P.	0 2 0	.....	
Ditto ditto ...	„ 19	D.fc. 16mo; 13	1st; 1,000	P.	0 1 0	The author.	
N. N. Sáhu; Bhágavat Prasád Dán	Feb. 14	Dy. 12mo; 8	8th; 1,000	P.	0 1 0	The Publisher, Dewánbazar, Cuttack.	
Rev. R. J. Grundy	Jan. 22	Dy. 8vo; 152	1st; 500	P.	1 0 0	The Baptist Missionary Society, Cuttack.	
N. N. Sáhu; Bhágavat Prasád Dán	Feb. 21	Dy. 12mo; 14	5th; 1,000	P.	0 0 9	The publisher, Dewánbázár, Cuttack.	
N. N. Sáhu; Máguni Sáhu ...	„ 28	Dy. 12mo; 12	1st; 1,000	P.	0 1 0	The publisher, Puri.	
N. N. Sáhu; Ananda Achárjya ...	Mar. 10	Dy. 16mo; 8	1st; 2,000	P.	0 0 6	The publisher, Sutáhát, Cuttack.	
Adam Samuel; Arata De ...	„ 12	Dy. 12mo; 16	1st; 1,000	P.	0 1 0	.....	
N. N. Sáhu; Hari Beherá ...	„ 23	Dy. 12mo; 38	1st; 1,000	P.	0 3 0	The publisher, Bankabázár, Cuttack.	
Gopí Náth Misra; Chintámani Padhiyári.	„ 4	Dy. 16mo; 12	1st; 1,000	P.	0 0 6	The publisher, Puri.	

1 Serial number.	2 Registration number.	3 Title, with an English translation of the name when not in that language, the language of the book, and the subject.	4 Name of author, translator, or editor of the book, or any part of it.	5 Place of printing and publication.
		URIYA BOOKS—concld.		
		RELIGION—*concld.*		
54	390	Dárdhyatá Bhaki Rasámrita. The Nectar of Firm Faith. Part I.	Ráma Dás	51, Sánkárítolá Lane, Calcutta ...
		SCIENCE (MATHEMATICAL).		
		Educational—		
55	61	Panakiábodhiní. A Key to Arithmetic ...	Rai Rádhá Náth Ráy Bahadur ...	The Utkal Sáhitya Press, Bálubázár; Káligali, Cuttack.
		BI-LINGUAL BOOKS.		
		I.—ARABIC AND BENGALI BOOKS.		
		MISCELLANEOUS.		
1	352	Vrihat Soleimáni Panjiká. Muhammadan Almanac Enlarged.	Mahammad Soleimán	155, Masjidbari Street, Calcutta A.
		II.—ARABIC AND URDU BOOKS		
		RELIGION.		
1	199	Addalíl-ul-Muhkam Alá, Wafát-el-Masíh-ibne Mariyam. The conclusive proof showing the Death of Jesus Christ.	Mahammad Raunaq Alí	55, Imámbári Lane, Calcutta; Moulmein.
		III.—ASSAMESE AND ENGLISH BOOKS.		
		LANGUAGE.		
		Educational—		
1	331	A Comprehensive Key to P. C. Sarkár's First Book of Reading.	Yogendra Náth Baruá	6, College Square, Calcutta ... ...
2	2141	A Complete Key to First Book of Reading	Lakshesvar Hazariká	51-2, Sukea's Street, Calcutta; Golághát, Assam.
		IV.—BENGALI AND ENGLISH BOOKS.		
		LANGUAGE.		
1	121	A Dictionary of the English Language. Edited by Dr. Marsman. Vol. II.	Abhay Charan Pál and Vrajendra Náth Ghoshál.	203-2; 25; Cornwallis Street, Calcutta
		Educational—		
2	1	A Complete Key to J. C. Nesfield's Anglo-Oriental Series of English Readers, Fourth Reader.	Jagadísvar Sen	The Tamoghna Press, Boália ...
3	3	A Key to B. Dhar's Model Spelling-book...	.....	The Asutosh Press, Dacca ... ...
4	15	A Complete Key to Newton's Indian Readers. No. I.	.....	Ditto ditto ... ...
5	16	Ditto ditto. No. II. ...	.....	Ditto ditto ... ...
6	12	A Complete Key to the Indian Newton's Reader. Book II.	S. K. Ghosh	The Genderiyá Press, Dacca ...
7	13	Model Spelling-book	Vrindávan Dhar	The Asutosh Press, Dacca ... ...
8	22	A Comprehensive Key to B. Dhar's Model Spelling-book.	.....	The Gopínath Press, Dacca ... ...
9	23	A Key to P. N. Mahalanavis's English Primer.	Hem Chandra Ghoshál	Ditto ditto ... ...
10	29	Child's Spelling-book	.....	The Adarsha Press, Dacca .. ...
11	31	A Complete Key to Easy English Readings	.....	The Isán Press, Dacca ... ...
12	34	A Key to B. Dhar's Model Spelling-book ...	.....	The Genderiyá Press, Dacca ...
13	19	Juvenile Instructor	.....	28, Beadon Row, Calcutta; Dacca ...
14	105	The Beginners' Translation and Word Book.	Kunjavihári Majumdár	46, Bechu Chatterji's Street; 65, College Street; Calcutta.
15	106	First Infant Primer	Kámákhyá Charan Banerji ...	46, Bechu Chatterji's Street; 107, Amherst Street, Calcutta.
16	116	A Complete Key to the English Entrance Course for 1906.	Rasamay Mitra	203-2; 25; Cornwallis Street, Calcutta
17	154	A Complete Key to the Indian Newton Readers. First Reader.	.....	The Adarsha Press, Dacca ... ...
18	176	A Complete Key to the Indian Newton Readers. Book II.	P. Ghosh	78, Amherst Street; 66, College Street; Calcutta.
19	203	A Complete Key to the Indian Newton Readers. Second Reader.	H. M. Gosvámí	45, Beniatolá Lane, Calcutta ...
20	255	English Primer for Indian Schools ...	Cháruchandra Mitra	3, Hastings Street, Calcutta ...
21	329	The New Indian Readers. First Book ...	C. A. Lorimer	10, Haladdhar Barddhan's Lane; 58, Wellington Street; Calcutta.
22	338	The Modern English Reader. First Book	Lily Soward	32-1, Malanga Lane, Calcutta ...
23	2173	Ditto ditto. ...	Ditto	Ditto ditto ... ...

First Quarter ending 31st March 1905—continued.

6	7	8	9	10	11	12	13
Name or firm of printer and of publisher.	Date of issue from the press or of the publication.	Size and number of sheets, leaves or pages.	Number of edition and number of copies of which the edition consists.	Printed or lithog'd.	Price at which the book is sold to the public.	Name and residence of the proprietor of copyright, or any part of it.	Number and date of registration of copyright.
					Rs. A. P.		
Panchánan Sarkár; Amrita Lál Sarkár.	1905. Mar. 1	Dy. 12mo; 198	1st; 1,000	P.	0 5 0	.....	
Visva Nath Kar; Sasi Bhúshan Ráy.	„ 1	D.fc. 16mo; 70	5th; 1,000	P.	0 2 6	The publisher, Káligalí, Cuttack.	
Mahammad Soleman; Maninuddin Ahmed.	Jan. 28	Dy. 12mo; 473	1st; 2,000	P.	0 8 0	.....	
A. M. Maulá Baks Rezwán; the author.	1904. Dec. 31	Dy. 8vo; 30	1st; 500	L.	0 2 3	.....	
N. C. Ghosh	1905. Feb. 8	Dcr. 16mo; 71	4th; 3,000	P.	0 3 0	.....	
Hari Charan De; Srijut Yogesvar Acháryya.	1904. Dec. 2	Dy. 8vo; 64	2nd; 1,000	P.	0 3 6	.....	
P. C. Sáhá; B. Banerji & Co. ...	1904. Dec. 30	Cr. 8vo; 988	12th; 3,000	P.	1 4 0	.....	
Kasimuddin Sarkár	1905. Jan. 18	Dy. 12mo; 68	1st; 500	P.	1 0 0	The author, Rániházár, Rájsahi	
Revatí Mohan Dás; The Asutosh Library.	1904. Dec. 12	Dy. 12mo; 74	2nd; 1,000	P.	0 6 0	.....	
Ditto ditto ...	„ 28	Dy. 12mo; 132	1st; 2,000	P.	0 14 0	.....	
Ditto ditto ...	„ 28	Dy. 12mo; 172	1st; 2,000	P.	0 14 0	.....	
Bhánu Chandra Dás; A. Dás Gupta	„ 27	Dy. 12mo; 247	1st; 1,250	P.	0 12 0	.....	
Revati Mohan Dás; Hariram Dhar	„ 24	Dy. 8vo; 60	8th; 5,000	P.	0 3 0	.....	
Gopinath Basák; Kámini Kumár De.	„ 30	Dy. 12mo; 67	1st; 1,000	P.	0 6 0	.....	
Gopinath Basák; the author ...	Jan. 15	Dy. 12mo; 60	1st; 1,000	P.	0 4 0	.....	
Vipresvar Chakravarti; Káli Prasanna Nath.	„ 15	Dy. 12mo; 24	1st; 2,000	P.	0 0 6	.....	
Mathuránáth De	„ 26	Dy. 12mo; 364	1st; 2,000	P.	1 6 0	.....	
Bhánu Chandra Das; The Asutosh Library.	Feb. 8	Dy. 12mo; 72	3rd; 3,000	P.	0 6 0	.....	
J. N. Basu; J. N. Ghosh ...	1904. Dec. 27	Dy. 16mo; 64	1st; 1,500	P.	0 6 0	.....	
R. Datta; S. C. Basu	„ 20	D.fc. 16mo; 128	3rd; 2,000	P.	0 5 0	.....	
R. Datta; the author	„ 20	Dcr. 16mo; 32	1st; 2,000	P.	0 1 0	.....	
Prem Chandra Sáhá; B. Banerji & Co.	„ 25	Cr. 8vo; 447	1st; 5,000	P.	2 0 0	.....	
Vipresvar Chakravarti; U. Dás ...	„ 5	Dy. 12mo; 120	1st; 1,000	P.	0 10 0	.....	
Amviká Charan Som; K. C. Chaudhuri & Co.	„ 20	Dy. 12mo; 152	1st; 3,000	P.	0 12 0	.....	
Sasibhúshan Chakravarti ...	„ 27	D.cr. 16mo; 141	1st; 2,000	P.	0 10 0	.....	
Jaygopál Dás; S. C. Mitra ...	1905. Jan. 5	Dy. 16mo; 64	9th; 10,000	P.	0 3 0	.....	
B. K. Das; S. C. Adhya & Co. ...	„ 26	Dcr. 16mo; 68	New 1,000	P.	0 4 0	.....	
S. P. Ghosh; The National Printing and Publishing House.	Feb. 20	Rl. 16mo; 60	6th; 2,000	P.	0 6 0	.....	
Ditto ditto. ...	1904. Dec. 16	Rl. 16mo; 60	5th; 5,000	P.	0 6 0	.....	

1	2	3	4	5
Serial number.	Registration number.	Title, with an English translation of the same when not in that language, language of the book, and the subject.	Name of author, translator, or editor of the book, or any part of it.	Place of printing and publication.
		***IV.—BENGALI AND ENGLISH BOOKS*—concld.**		
		LANGUAGE—*concld.*		
24	2174	The Modern English Primer	Lily Soward	32-1, Malanga Lane, Calcutta ...
25	342	Ditto ditto	Ditto	Ditto ditto. ... ...
26	345	An Easy Grammer in Bengali	Yogendra Náth Banerji	25, Ráybágán Street; 29, Canning Street; Calcutta.
27	348	A Complete Key to the Indian Newton Reader. First Reader.	H. M. Gosvámí	25, Ráybágán Street, Calcutta; Serampur
28	362	A Graduated Series of Papers for Translation into English.	A. C. Chatterji	59, Mirzapur Street, Calcutta ...
29	392	A New English Primer for Bengali Children.	Kumudbandhu Basu and Gangádhar Banerji.	114, Amherst Street; 54, College Street; Calcutta.
30	393	A Complete Key to Model Lessons ...	Manindra Chandra Bhattácháryya and N. Ç. Kánjilál.	114, Amherst Street; 63, College Street; Calcutta.
31	2124	A Complete Key to the Indian Newton Readers. Book II.	Abhay Kánta Ghosh	108, Báránasí Ghosh's Street; 57-1, College Street; Calcutta.
32	2163	Grammar on New Method	A. C. Banerji	17, Madan Mittra's Lane; 64, College Street; Calcutta.
		V.—BENGALI AND SANSKRIT BOOKS.		
		LANGUAGE.		
1	12	Satíkánuvád Kalápa Vyákaranam. Grammar by Kalápa with Annotation and Translation.	Gurunáth Vidyánidhi Bhattácháryya	62, Amherst Street; 39, Basupárá Lane; Calcutta.
		Educational—		
2	18	Vyákaran Mukur. Mirror of Grammar. Part I.	Sítánáth Mukherji	The Náráyan Press, Dacca ... ...
3	84	Sankshiptasára Vyákaranasya Sandhi Tathá Subanta Kadchá. Joining of Words and Rules of Declension as given in the Sankshiptasár Grammar.	Jívánanda Vidyáságar	38, Sivanáráyan Dás's Lane; 2, Ramánáth Majumdár's Street; Calcutta.
4	125	Laghu Páninfya. "Students' Páninfya Companion." Part II.	Devendra Kumár Banerji Vidyáratna, M. A.	10, Haladhar Barddhan's Lane; 65, College Street; Calcutta.
5	179	Sanskrita Chandriká. Moon-light of Sanskrit.	Balarám Vidyáratna	17, Madan Mitra's Lane, Calcutta ...
6	241	Sukhabodham Vyákaranam. Easy Grammar.	A Kávyatírtha Vidyávinod ...	28, Beadon Row, Calcutta; Dacca ...
7	349	Vyákaran Mayúkha. Light of Grammar. Part I.	Karunákánta Sen Gupta	25, Ráybágan Street, Calcutta; Dacca.
8	394	Sanskrita Anuváda Sikshá. Instruction in Translating into Sanskrit.	Kedárnáth Kávya Sánkhyatírtha ...	114, Amherst Street; 3-1, Rájá's Lane; Calcutta.
9	417	Sanskrita Vyákaran Upakramanikú. Introduction to Sanskrit Grammar.	Isvar Chandra Vidyásagar ...	17, Madan Mitra's Lane; 25 Cornwallis Street; Calcutta.
10	423	Vyákaran Kaumudí. Moon-light of Grammar. Parts II and III (together).	Ditto ditto ...	Ditto ditto ...
11	310	Prasnottaramalá. A Collection of Question and Answer. Part I.	Srírám Sástri	5, Rámadhan Mitra's Lane; 15-1, Rajábágán Junction Road; Calcutta.
		MEDICINE.		
12	60	Charaka Sanhitá. The Compilation by Charaka. (T).	Kaviráj Satís Chandra Sarmá ...	25, Rajá Navakrishna's Street, Calcutta
		MISCELLANEOUS.		
13	9	Jívan Suhrid. The Friend of Life. Part I	Satís Chandra Gupta. Kavichintámani.	The Salkiá Printing Works, Howrah
14	2175	Moha-mudgar O Moha-kuthár. Hammer to Illusion or Axe to Illusion.	Párna Chandra De	133, Masjidbári Street; 201, Cornwallis Street; Calcutta.
15	2159	Vanger Játíya Itihás. Brahmanakánda. The Castes and Sects of Bengal. The Chapter on Brahmans. Vol. II. Part II.	Edited by Nagendra Nath Basu ...	5, Rámadhan Mitra's Lane; 14, Talipárá Lane; Calcutta.
16	269	Siddhánta Samudra. Sea of Conclusions. Part VI.	Dharmmánanda Mahábhárati ..	32, Sukea's Street, Calcutta ... ...
		POETRY.		
17	343	Kokiladútam. The Cuckoo-Messenger ...	Harimohan Prámánik	25, Ráybágán Street, Calcutta; Santipur.

First Quarter ending 31st March 1905—continued.

Name or firm of printer and of publisher.	7 Date of issue from the press or of the publication.	8 Size and number of sheets, leaves, or pages.	9 Number of edition and number of copies of which the edition consists.	10 Printed or litho'd.	11 Price at which the book is sold to the public.	12 Name and residence of the proprietor of copyright, or any part of it.	13 Number and date of Registration of copyright.
	1904.				Rs. A P.		
S. P. Ghosh; The National Printing and Publishing House.	Nov. 28	Cr. 8vo; 48	12th; 5,000	P.	0 3 0	.....	
	1905.						
Ditto ditto. ...	Jan. 23	Rl. 16mo; 48	12th; 5,000	P.	0 3 0	.....	
Sányál & Co.; G. C. Náth; and S. K. Náth.	Feb. 17	Dfc. 16mo; 59	11th; 2,000	P.	0 4 0	.....	
Sányál & Co.; the author ...	„ 4	Dcr. 16mo; 128	1st; 2,000	P.	0 8 0	.....	
S. Bhattácháryya; the author ...	„ 4	Dcr 16mo; 78	1st; 1,000	P.	0 4 0	.....	
Gopál Chandra Niyogí; S. K. Láhirí & Co.	„ 5	Dcr. 16mo; 64	1st; 1,400	P.	0 0	.....	
Gopál Chandra Neogi; Vrajendra Náth De.	„ 15	Dy. 12mo; 144	1st; 1,000	P.	0 1 0	.....	
	1904.						
Náráyan Chandra Pál; J. N. Pál...	Dec. 1	Dy. 12mo; 138	1st; 2,000	P.	0 6 0	.....	
U. C. Sámanta; the City Book Society.	Nov. 25	Dcr. 16mo; 60	1st; 3,000	P.	0 3 0	.....	
	1905.						
Upendra Náth Chakravarti; the editor.	Jan. 1	Rl. 8vo; 692	1st; 1,000	P.	3 0 0	.....	
	1904.						
Lachhman Basák; Anádi Náth Mukherji.	Dec. 29	Dy. 12mo; 124	1st; 1,000	P.	0 8 0	.....	
Siddheswar Pán; the author ...	„ 13	Rl. 12mo; 70	1st; 1,000	P.	0 8 0	.....	
B. K. Dás; Bhattácháryya & Sons	„ 27	Dcr. 16mo; 138	1st; 1,000	P.	0 12 0	.....	
	1905.						
Ramani Mohan De; the author ...	Jan. 4	Dcr. 16mo; 45	1st; 1,000	P.	0 4 0	.....	
J. N. Basu; A. C. Dás Gupta ...	„ 20	Dcr. 16mo; 112	1st; 1,000	P.	0 6 0	.....	
Sányál & Co.; B. C. Basák, ...	Feb. 5	Dy. 12mo; 42	4th; 1,000	P.	0 3 0	.....	
Gopál Chandra Niyogí; Dev Kisor Mukherji.	„ 27	Dc. 16mo; 48	1st; 1,000	P.	0 4 0	.....	
R. M. De; Sukumár Adhikári and others.	„ 20	Dy. 12mo; 207	New; 10,000	P.	0 8 0	.....	
Ditto ditto ...	„ 25	Dy. 12mo; 204	35th; 5,000	P.	1 0 0	.....	
Púrna Chandra Dás; Sarat Chandra Mustaphi.	„ 13	Dy. 12mo; 151	1st; 1,000	P.	0 10 0	The publisher, 15-1, Rájábágán Junction Road, Calcutta.	No. 9 Register No. 87, dated 13th February 1905.
Upendra Náth Mandal; the author	Jan. 1	Dy. 8vo; 1466	1st; 2,500	P.	6 0 0	.....	
Balái Chánd Pál; the author ...	Feb. 20	Dy. 12mo; 36	1st; 1,000	P.	0 1 0	The author, Salkiá, Howrah.	
Yogendra Náth Chakravartí; Gurudás Chatterji.	Dec. 29	Cr. 8vo; 29	1st; 1,200	P.	0 4 0	.....	
A. N. Basu & Co.; the author ...	„ 12	Rl. 8vo; 450	1st; 1,000	P.	2 8 0	.....	
Prabhát Chandra Datta; Surendra Kumár Ráy.	Jan. 24	D. cr. 16mo; 112	1st; 2,000	P.	0 8 0	.....	
Sányál & Co.; Sudhámay Prámánik	Feb. 18	Dy. 8vo; 16	1st; 500	P.	1 0 0	.....	

Serial number.	2 Registration number.	3 Title, with an English translation of the same when not in that language, the language of the book, and the subject.	4 Name of author, translator, or editor of the book, or any part of it.	5 Place of printing and publication.
		***V.—BENGALI AND SANSKRIT BOOKS*—concld.**		
		POETRY—*concld.*		
		Educational—		
18	387	Prasnottarmálá. A Collection of Question and Answer. Part I.	Srírám Sástrí	21, Balarám Ghosh's Street; 15-1, Rájá-bágán Junction Road; Calcutta.
		RELIGION.		
19	2	Srímadbhágavatam. Book of the Lord. Parts 153 to 154 (together). (T).	Edited by Khagendra Náth Sástrí ...	The New Town Press, Bhawanipur ...
20	3	Ditto ditto. Parts 155 to 156 (together). (T).	Ditto ditto ...	Ditto ditto ...
21	8	Ditto ditto. Parts 157 to 159 (together). (T).	Ditto ditto ...	Ditto ditto ...
22	149	Srímadbhagavadgitá. The Divine Lay. Part 26. (T).	Edited by Dámodar Mukkerjí ...	309, Upper Chitpur Road; 5, Bindu Pálit's Lane; Calcutta.
23	„	Ditto ditto. Part 27. (T)	Ditto ditto ...	Ditto ditto ...
24	385	Ditto ditto. Part 28. (T)	Ditto ditto ...	Ditto ditto ...
25	„	Ditto ditto. Part 29. (T)	Ditto ditto ...	Ditto ditto ...
26	2156 Letter No.	Vásishtha Mahárámáyanam. The Great Rámáyana containing the Lectures of the Sage Vasishtha. Part 84. (T).	Edited by Kálivar Vedántavágís ...	214, Bowbázár Street, Calcutta ...
27	239	Sánkhyakáriká. Verses on Sánkhya. (T) ...	.....	The Oriental Press, Bhawanipur; 22, Goábágán Street, Calcutta.
28	„	Kaushítakí Upanishat. The Name of an Upanishad.	Edited by Syámlál Gosvámi ...	6, Bofm Ghosh's Lane; 120-2, Masjid-bari Street, Calcutta.
29	56	Srí Chandrasekhar Máhátmya. Virtue attached to the Shrine of Chandra Sekhar.	Srímad Vedánanda Svíma ...	3-4, Gaur Mohan Mukherji's Street, Calcutta.
30	219	Kármma Puránam. The Name of a Purána. (T).	Edited by Panchánan Tarkaratna ...	38-2, Bhavání Charan Datta's Street, Calcutta.
31	242	Sánuvád Utkalkhanda. The Chapter on Orissa with a Translation. (T).	Edited by Káli Prasanna Vidyáratna	1, Nimu Gosvami's Lane, Calcutta ...
32	254	Srímadbhagavadgitá. The Divine Lay. (T).	Translated by Satyendra Náth Tagore.	55, Upper Chitpur Road, Calcutta ...
33	266	Upásaná, Prárthaná O Sádhuvachan. Hymns, Prayers and Sayings of Saintly persons.	Yogendra Nath Mitra	30-5, Madan Mitra's Lane, Calcutta ...
34	443	Krishna Karnámrita. A Vaishnava Work meaning the Name of Krishna which is nectar to the ear.	Prasanna Kumár Sástrí	31, Masjidbárí Street; 34, Nayan Chand Datta's Street; Calcutta.
		VI.—BENGALI AND URDU BOOKS.		
		LANGUAGE.		
1	60	Urdu-Upades. Instruction in Urdu ...	Ráy Káliprasanna Sen Gupta ...	3-4, Gaurmohan Mukherji's Street; 30, Cornwallis Street; Calcutta.
		VII.—ENGLISH AND PALI BOOKS.		
		LANGUAGE.		
		Educational—		
1	2111	Pali Course. Part III	James Gray	41, Lower Circular Road, Calcutta; Rangoon.
2	379	Elementary Páli Grammar or Second Páli Course.	Ditto	Ditto ditto ...
		VIII.—ENGLISH AND SANSKRIT BOOKS.		
		LANGUAGE.		
		Educational—		
1	118	Model Questions with Answers on Bhatti-Kávyam. (Cantos 1 & 2.)	Bhát Náth Vidyáratna	203-2; 25; Cornwallis Street, Calcutta
		LAW.		
2	71	Dáyatattva of Raghunandan. (T) ...	Golap Chandra Sarkár Sástrí, M.A., B.L.	25, Pataldángá Street; 6, Hastings Street; Calcutta.

First Quarter ending 31st March 1905—continued.

6 Name or firm of printer and of publisher.	7 Date of issue from the press or of the publication.	8 Size and number of sheets, leaves, or pages.	9 Number of edition and number of copies of which the edition consists.	10 Printed or Published.	11 Price at which the book is sold to the public.	12 Name and residence of the proprietor of copyright, or any part of it.	13 Number and date of Registration of copyright.
	1905.				Rs. A. P.		
Kisdri Mohan Sinha; Sarat Chandra Mustaphi.	Mar. 1	1[illegible] 12mo; 103	1st; 1,025	P.	0 11 0	The publisher, 15-1, Rájá[illegible]kán Junction Road, Calcutta.	No. 10 Register No. 38, dated 2nd Mar. 1905.
Manmatha Náth Mitra; the editor	Jan. 4	Rl. 8vo; 64	1st; 1,000	P.	0 4 0	The editor, 37, Balarám Basu's Ghát Road, Bhawanipur, Calcutta.	
Ditto ditto ...	Feb. 3	Rl. 8vo; 64	1st; 1,000	P.	0 4 0	Ditto.	
Ditto ditto ...	Mar. 4	Rl. 8vo; 96	1st; 1,000	P.	0 6 0	Ditto.	
	1904.						
Chaturbhúj Bhattácháryya; the Translator.	Dec. 28	Rl. 8vo; 80	1st; 1,250	P.	0 10 0	.....	
Ditto ditto ...	„ 28	Rl. 8vo; 80	1st; 1,250	P.	0 10 0	.....	
	1905.						
Ditto ditto ...	Feb. 8	Rl. 8vo; 80	1st; 1,250	P.	0 10 0	.....	
Ditto ditto ...	„ 8	Rl. 8vo; 80	1st; 1,250	P.	0 10 0	.....	
	1904.						
Asutosh Gar; Nanda Lál Pál ...	Nov. 30	Dy. 8vo; 48	1st; 1,000	P.	0 6 0	....	
Baradá Kánta Vidyáratna; Balái Chánd Mallik.	...	Dy. 12mo; 208	1st; ...	P.	0 10 0	.....	
U. C. Basu & Co.; Aghor Náth Datta.	...	Cr. 16mo; 121	1st; ...	P.	0 8 0	.....	
Mukherji & Chatterji; B. K. Mitra	Dec. 18	D.fc. 16mo; 67	1st; 1,000	P.	...	.....	
N. B. Ray	Aug. 17	Dy. 8vo; 422	New; 3,500	P.	3 0 0	.....	
	1905.						
Mákhan Lál Ghosh; Ganes Chandra Ghosh.	Jan. 30	Dy. 8vo; 531	1st; 1,500	P.	2 0 0	The publisher, 1, Nimu Goswámi's Lane, Calcutta.	No. 11 Register No. 34, dated 30th January 1905.
Devendranáth Bhattácháryya ...	Jan. 17	Dy. 8vo; 387	1st; 1,000	P.	2 8 0	.....	
Bhút Náth Pálit	Jan. 24	D.fc. 16mo; 384	1st; 500	P.	1 0 0	.....	
	1904.						
Bhímá Charan Basu; the editor ...	Nov. 4	Dy. 12mo; 271	1st; 1,000	P.	0 12 0	...	
Mukherji & Chatterji; the Sanskrit Press Depository.	Dec. 23	Dy. 12mo; 180	3rd; 1,000	P.	1 8 0	.....	
Rev. Percy Knight; the author ...	Nov. 23	Fc. 8vo; 62	1st; 350	P.	...	.....	
	1905.						
Ditto ditto ...	Feb. 9	Dy. 8vo; 112	1st; 300	P.	..	.....	
	1904.						
Prem Chánd Sáhá; B. Banerji & Co.	Dec. 15	Cr. 8vo; 46	1st; 1,100	P.	0 6 0	.....	
	1905.						
K. P. Chakravarti; R. Cambray & Co.	Jan. 5	Rl. 8vo; 190	2nd; 200	P.	5 0 0	.....	

1	2	3	4	5
Serial number.	Registration number.	Title, with an English translation of the same when not in that language, the language of the book, and the subject.	Name of author, translator, or editor of the book, or any part of it.	Place of printing and publication.
		IX.—ENGLISH AND SANTALI BOOKS.		
		RELIGION.		
1	2	Ritual of the Methodist Episcopal Church According to the Discipline in the Santali Language.	W. P. Byers	Pokhuria, Manbhum ... ...
		X.—ENGLISH AND URIYA BOOKS.		
		LANGUAGE.		
		Educational—		
1	2136	Vyákaran. Grammar	Jyotis Chandra Vidyás, B.A. ...	51, Sánkárítolá Lane, Calcutta ...
		XI.—HINDI AND SANSKRIT BOOKS.		
		MISCELLANEOUS.		
1	92	Samudra Yátrá. Sea-voyage	Lakshmi Náráyanlál	The Bihárbandhu Press, Bankipur; Aurangabad, Gaya.
2	73	Jagadís Antargrihí Yátrá. Va Jagadís Mandír Darsan Ke Niyam. Journey inside the Temple of the God Jagannáth and Rules of visiting the Temple of the God Jagannath.	Sukdev Sarmá	The Jagannáth Press, Puri ... ...
		RELIGION.		
3	67	Srí Jagannáth Ashtak. Eight Verses in Honour of the God Jagannáth.	Nagíndás Rájárám	Ditto ditto. ...
4	217	Yájnavalkya Samhitá. The Compilation by Yájnavalkya. (T).	.....	38-2, Bhavánicharan Datta's Street, Calcutta.
5	4	Mantra Prabhákar Satik. The Sun of Mantras with Notes. (T).	Svámi Hansa Svarup	Muzaffarpur ... ...
6	419	Rijustavamanjushá. The Casket of Hymns easy to understand.	Umápati Datta	63, Cotton Street; 153, Harrison Road; Calcutta.
		XII.—MARATTI AND SANSKRIT BOOKS.		
		MISCELLANEOUS.		
1	147	Kámaratna Tantram. Name of a Tantra. (T).	Lakshman Bálakrishna Phansikar ...	59, Cotton Street, Calcutta; Muradavad
		XIII.—SANSKRIT AND URIYA BOOKS.		
		DRAMA.		
1	16	Sachitra Mahánátak; The Great Drama with Illustration. (T).	Translated by Gopínáth Kar ...	The Arunoday Press, Cuttack ...
		MEDICINE.		
2	60	Vaidya Jívan. Important as Life to Vaidyas (Men of medical profession.). (T).	Chintámani Praharáj	The Cuttack Printing Company's Press, Cuttack.
		MISCELLANEOUS.		
3	45	Sudarśanavilás Mohamudgar O Khanda Kávya. Verses by a poet named Sudarsan, The Pulveriser of Illusion and Small Poems.	Gauránga Mahápátra	The Darpanráj Press,; Bakrávád, Cuttack.
4	50	Sámudrikam. Science of Palmistry ...	Gopínath Kar	The Arunoday Press,; Dewanbázár, Cuttack.
5	25	Prasnávalí. Sakun Vichár O Varnamátriká. A Collection of Questions, Discussion of Omens and a Magical Diagram containing the Letters of the Alphabet.	Pandit Sarvesvar Bhattácháryya ...	The Cuttack Printing Company's Press, Cuttack.
		POETRY.		
6	22	Kisora Chandránanda Champu. A Work in prose and poetry on the Delights of the youthful Krishna.	Baladev Rath, Kavirsuryya Ráyguru	The Darpanráj Press, Cuttack ...
7	43	Ditto ditto.	Ditto ditto. ...	The Cuttack Printing Company's Press, Cuttack.
8	68	Srutabodha Mugdha Prakásiká. An Easy Key to Srutabodh. (T).	Karunákar Misra	The Utkal Sáthiya Press, Cuttack ...
		RELIGION.		
9	8	Dvádasa Skandha Tiká Bhágavat O Nityharmma. The Twelfth Chapter of the Abridged Bhagávat (Book of the Lord) and Daily Religious Duties.	Jagannáth Dás	The Edward Press, Cuttack ...
10	21	Nityakarmma O Tíkábhágavat. Daily Religious Duties and Abridged Bhágavat (Book of the Lord).	Gadádhar Sáhu	The Darpanráj Press, Cuttack ...
11	34	Uttar-Gitá. Lays about God. Part I. (T)	Kásináth Pandá	The Cuttack Printing Company's Press, Cuttack.

First Quarter ending 31st March 1905.

6	7	8	9	10	11	12	13
Name or firm of printer and of publisher.	Date of issue from the press or of the publication.	Size and number of sheets, leaves, or pages.	Number of edition and number of copies of which the edition consists.	Printed or litho'd.	Price at which the book is sold to the public.	Name and residence of the proprietor of copyright, or any part of it.	Number and date of Registration of Copyright.
	1904.				Rs. A. P.		
A. Campbell	Dec. 20	Dy. 12mo; 22	1st; 200	P.	...	.....	
Panchánan Sarkár	„ 10	Rl. 16mo; 139	1st; 1,000	P.	0 8 0	.....	
	1905.						
Akiulál	Feb. 25	Dy. 12mo; 22	1st; 1,000	P.	0 4 0	The author, Aurangabad, Gaya.	
Gopínath Misra; the author ..	„ 22	Dy. 12mo; 6	1st; 2,000	P.	0 0 6	The author, Benares City.	
Ditto ditto. ...	Jan. 19	Dy. 16mo; 8	1st; 2,000	P.	0 0 6	The author, Surat.	
Nutvihári Ráy	1904. Aug. 17	Rl. 8vo; 94	New 2,000	P.	2 0 0	.....	
Ráma Lál	1905. Jan. 15	Dy. 16mo; 283	1st; 1,500	P.	1 8 0	.....	
Dakshiná Charan Chakravarti; the Literary Branch Vidyálay Institute.	Feb. 25	Dcr. 16mo; 143	1st; 1,000	P.	0 6 0	.....	
Ráma Chandra Mandal; Baladev Prasád Misra.	Jan. 14	Dy. 8vo; 128	1st; 1,000	P.	...	.....	
N. N. Sáhu; Bhágavat Prasád Dán	„ 18	D.fc. 16mo; 376	1st; 1,000	P.	0 12 0	Bhágavat Prasád Dán, Dewanbázár, Cuttack.	
Bhágírathí Sáthiyá; the Cuttack Printing Company.	Feb. 24	Fc. 8vo; 68	1st; 1,000	P.	0 5 0	The author.	
Adam Samuel; the author ...	Jan. 19	Dy. 12mo; 12	2nd; 1,000	P.	0 1 3	The author, Bakrabad, Cuttack.	
N. N. Sáhu; Bhágavat Prasád Dán	Feb. 21	D.fc. 16mo; 28	18th; 1,000	P.	0 2 0	Bhágavat Prasád Dán, Dewanbázár, Cuttack.	
Bhágírathí Sáthiyá; the Cuttack Printing Company.	Jan. 18	Fc. 8vo; 14	1st; 1,000	P.	0 1 0	The author, Bentkar, Cuttack.	
Adam Samuel; Madan Sáhu ...	1904. Dec. 28	D.fc. 16mo; 31	1st; 1,000	P.	0 1 6	.....	
Bhágírathí Sáthiyá; the Cuttack Printing Company.	1905. Feb. 14	D.fc. 16mo; 31	1st; 1,000	P.	0 1 6	Sudarsan, Nanda, Puri.	
Vísvanáth Kar	Mar. 27	D.fc. 16mo; 14	1st; 1,000	P.	0 1 0	The author, Cuttack.	
A. K. Ghosh; Sadasiv De ...	1904. Dec. 26	Dy. 12mo; 12	1st; 1,000	P.	0 1 0	Sadasiv De, Kájibázár, Cuttack.	
Adam Samuel; the author ...	Dec. 28	Dy. 12mo; 12	2nd; 3,000	P.	0 0 9	.....	
Bhágírathí Sáthiyá; the Cuttack Printing Company.	Feb. 2	Fc. 8vo; 36	1st; 1,000	P.	0 2 6	The author, Mansingpatná, Cuttack.	

1	2	3	4	5
Serial number.	Registration number.	Title, with an English translation of the same when not in that language, the language of the book, and the subject.	Name of author, translator or editor of the book, or any part of it.	Place of printing and publication.
		***XII.—SANSKRIT AND URIYA BOOKS*—concld.**		
		RELIGION—*concld.*		
12	57	Bráhmánda Bhúgol. Description of the Universe.	Balarámdás	The Arunoday Press, Cuttack ...
13	66	Pinda Brahmánda Gitá. Lays about the Universe.	Lakshmínáráyan Dás	The Darpanráj Press, Cuttack ...
14	76	Srí Lokanáth Janán. Prayers to Lokanáth (the god Siva).	Arata De	The Jagannáth Press, Cuttack ...
15	176	Padma Kalpa Tiká	Kásináth Pandá	The Cuttack Printing Company's Press, Cuttack.
		TRI-LINGUAL BOOKS.		
		I.—BENGALI, ENGLISH AND HINDI BOOKS.		
		MISCELLANEOUS.		
1	2	Muralí. Flute	Abu Hámid	The Savitá Press, Putia, Rajshahi ...
		II.—BENGALI-ENGLISH AND SANSKRIT BOOKS.		
		LANGUAGE.		
		Educational—		
1	32	Nava Hita Páth Dipiká. A Key to Nava Hita Páth.	... ...	The Isán Press; the Victoria Library; Dacca.
2	33	Sanskrita Padamanjarír Vyákhyá. A Key to Sanskrita Pada Manjarí.	Vipin Vihárí Gangopádhyáy ...	The Gendoriyá Press; the Asutosh Library; Dacca.
3	57	Sanskrita Vyákaran O Rachaná Síkshá. Sanskit Grammar and Instruction in Essays-writing.	Avínas Chandra Mukherji ...	3-4, Gaur Mohan Mukherji's Street; 67, College Street; Calcutta.
4	187	Sanskritabodhah. Knowledge of Sanskrit	Syámá Charan Kaviratna ...	25, Ráybágán Street; 2 Goábágán Street; Calcutta.
5	350	Níti Prabandha-Darpanah. A Key to Níti Prabandha, Part I.	Rákhál Dás Vidyáratna Bhattácháryya.	108, Baranasí Ghosh's Street; 65, College Street; Calcutta.
		MISCELLANEOUS.		
6	128	Vidagdha Mukhamandanam. Ornament of the Mouth of the Learned. (T).	Syámá Charan Kaviratna ...	2, Goabágán Street; 201, Cornwallis Street; Calcutta.
		POETRY.		
		Educational—		
7	2162	Raghuvansam. Dynasty of Raghu. Canto XIV. (T)	Sáradá Ranjan Ráy, M.A. ...	17, Madan Mitra's Lane; 179, Dharmatalá Street; Calcutta
8	184	Kumár Sambhavam. The Birth of the War-God. Cantos I—VIII. (T).	Srís Chandra Chakravartí, B.A. ...	25, Ráybágán Street, Calcutta; Dacca
		RELIGION.		
9	246	Páralaukika. Pertaining to the Next World	Rajaní Kánta Gupta	5, Sivanáráyan Dás's Lane, Calcutta; Barisal.
		III.—ENGLISH, HINDI AND URDU BOOKS.		
		LANGUAGE.		
		Educational—		
1	339	The Modern English Primer	Lily Soward	32-1, Malangá Lane, Calcutta ...
		UNI-LINGUAL PERIODICALS.		
		I.—BENGALI PERIODICALS.		
		ART.		
1	79	Sangít-Prakásiká. Expounder of Music. A monthly paper. Vol. IV. No. 4.	Edited by Jyotirindra Nath Tagore	5,5 Upper Chitpur Road, Calcutta ..
2	410	Ditto ditto. Vol. IV. No. 5 ...	Ditto ditto ...	55, Ditto ditto ...
		HISTORY.		
3	97	Aitihásik Chitra. Historical Pictures. A monthly paper. 1st year. No. 3.	Edited by Nikhil Náth Ráy, B.L. ...	91, Durgá Charan Mitra's Street, Calcutta.
		MEDICINE.		
4	190	Bhishak Darpan. Mirror of the Physician. A monthly paper. Vol. XIV. No. 9.	Edited by Drs. Kálí Mohan Sen, L.M.S., and Girís Chandra Bágchí.	25, Ráybágán Street, Calcutta ...
5	101	Chikitsá. Practice of Medicine. A monthly paper. Vol. I. No. 4.	Edited by Rájendra Lál Sár ...	104, Cornwallis Street; 89, Syámbázár Street; Calcutta.
6	206	Indiyán Homiopyáthik Ribhiu. Indian Homœopathic Review. A monthly paper. Vol. XIII. No. 9.	Edited by Pratáp Chandra Majumdár, M.D., and Jitendra Náth Majumdár, M.D.	10, Sambhu Chandra Chatterji's Street; 203-1, Cornwallis Street; Calcutta.

First Quarter ending 31st March 1905—continued.

6	7	8	9	10	11	12	13
Name or firm of printer and of publisher.	Date of issue from the press or of the publication.	Size and number of sheets, leaves, or pages.	Number of edition and number of copies of which the edition consists.	Printed or litho'd.	Price at which the book is sold to the public.	Name and residence of the proprietor of copyright, or any part of it.	Number and date of Registration of Copy right.
	1905.				Rs. A. P.		
N. N. Sáhu; Bhágavat Prasád Dán	Feb. 25	Dy. 12mo; 58	2nd; 1000	P.	0 2 0	Bhágavat Prasád Dán, Dewanbázár, Cuttack.	
Adam Samuel; Paramánanda Ráy	Mar. 12	Dy. 16mo; 8	1st; 1000	P.	0 1 0	The author, Jagannáthballabh, Cuttack.	
G. N. Misra; the author ...	„ 15	D.fc. 16mo; 8	3rd; 1000	P.	0 1 0	The author, Puri.	
	1904.						
Bhágirathi Sáthiyá; the author ...	Dec. 19	D.fc. 16mo; 16	1st; 1000	P.	0 1 3	The author, Mansing Patna, Cuttack.	
	1905.						
Sarat Chandra Chaudhurí; Khájá Kamaruddin.	Jan. 10	Dy. 12mo; 50	2nd; 2000	P.	.....	The author, 36, McLeod Street, Calcutta.	
Mathurá Náth De; J. N. Ghosh ...	„ 27	Dy. 12mo; 172	1st; 2000	P.	0 14 0	.....	
Bhánu Chandra Dás; Harirám Dhar.	„ 16	Dy. 12mo; 216	3rd; 1250	P.	0 14 0	.....	
	1904.						
Mukherji and Chatterji; the Students' Library.	Dec. 22	D.cr. 16mo; 358	2nd; 1000	P.	1 4 0	.....	
	1905.						
Sányál & Co.; S. Banerji ...	Jan. 11	D.cr. 16mo; 108	1st; 1000	P.	0 4 0	The author, Sibpur; Howrah...	No 12 Register No. 38, dated 24th Feb. 1905.
Náráyan Chandra Pál; S. C. Basu.	„ 29	D.cr. 16mo; 80	1st; 1000	P.	0 12 0	.....	
Tárini Charan Kr; Gurudás Chatterji.	„ 1	Dy. 12mo; 92	1st; 1100	P.	0 4 0	.....	
	1904.						
Ramaní Mohan De; S. Ráy & Co.	Dec. 1	D.cr. 16mo; 182	1st; 1500	P.	1 0 0	.....	
Sányál & Co.; Vrindávan Chandra Basák.	„ 28	D.cr. 16mo; 889	1st; 1000	P.	4 0 0	.....	
	1905.						
Púrna Chandra Dás; the author	Jan. 21	D.cr. 16mo; 64	1st; 300	P.	.....	.....	
S. P. Ghosh; the National Printing and Publishing House.	Feb. 10	D.cr. 16mo; 52	2nd; 2000	P.	0 3 0	.....	
	1904.						
Devendra Náth Bhattácháryya ...	Dec. 16	Dy. 4to; 24	1st; 250	P.	0 4 0	.....	
	1905.						
Ditto ditto ...	Feb. 7	Dy. 4to; 24	1st; 250	P.	0 4 0	.....	
	1904.						
Kunja Vihárí Datta; Upendra Nath Bhattácháryya.	Dec. 18	Cr. 8vo; 48	1st; 500	P.	0 3 0	.....	
	1905.						
Sányál & Co.	Jan. 12	Rl. 8vo; 40	1st; 350	P.	6 0 0 yearly.	.....	
A. C. Súr; Rám Lál Súr ...	„ 3	Dy. 12mo; 36	1st; 1,000	P.	0 2 0	.....	
U. Rakshit; the editors ...	„ 5	Dy. 8vo; 16	1st; 200	P.	0 4 0	.....	

1	2	3	4	5
Serial number.	Registration number.	Title, with an English translation of the same when not in that language, the language of the book, and the subject.	Name of author, translator, or editor of the book, or any part of it.	Place of printing and publication.
		I—BENGALI PERIODICALS—contd.		
		MISCELLANEOUS.		
7	11	Antahpur. Zenana. A monthly paper. 7th year. No. 6.	Edited by Srímatí Lílávati Mitra ...	32, Sukea's Street, Calcutta ... ...
8	10	Ditto ditto 7th year. No. 7 ...	Ditto ditto	ditto ditto ... ...
9	2144	Archchaná. Worship. A monthly paper. Vol. I. No. 7.	Edited by Jnánendra Náth Mukherji, M.A.	51-2, Sukea's Street; 20, Párvatí Charan Ghosh's Lane; Calcutta.
10	2142	Ditto ditto. Vol. I. No. 8 ...	Ditto ditto	Ditto ditto ... ...
11	2151	Avasar. Leisure. A monthly paper. Vol. I. No. 2.	Edited by Nava Kumár Datta ...	133, Musjidbári Street; 8-1, Nilamani Mitra's Street; Calcutta.
12	288	Ditto ditto. Vol. I. No. 3 ...	Ditto ditto	Ditto ditto ... ...
13	289	Ditto ditto. Vol. I. No. 4 ...	Ditto ditto	Ditto ditto ... ...
14	437	Ditto ditto. Vol. I. No. 5 ...	Ditto ditto	63, Nimtalá Ghát Street; 3-1, Nilamani Mitra's Street; Calcutta.
15	396	Alochaná. Examination. A monthly paper. 8th year. No. 6.	Edited by Yogendra Náth Chattopádhyáy.	63, Nimtalá Ghát Street, Calcutta; 83, Panchánantalá Road, Howrah.
16	98	Ditto ditto. 8th year. No. 7 ...	Ditto ditto	Ditto ditto ... ...
17	438	Ditto ditto. 8th year. No. 8 ...	Ditto ditto	Ditto ditto ... ...
18	436	Ditto ditto. 8th year. No. 9 and 10 (together).	Ditto ditto	Ditto ditto ... ...
19	3	Arati. Worshipping with Light. A monthly paper. 5th year. No. 1	Edited by Upendra Chandra Ráy ...	The Subrid Press, Mymensingh ...
20	141	Asá. Hope. A monthly paper. Vol. III. No. 5.	Edited by Hemanta Kumár Banerji, B.A. B.L., and Nani Gopál Mukherji.	31, Káli Prasád Datta's Street; 27-1, Akhil Mistri's Lane; Calcutta.
21	142	Ditto ditto. Vol. III. No. 6 ...	Ditto ditto	Ditto ditto ... ...
22	143	Ditto ditto. Vol. III. No. 7	Ditto ditto	Ditto ditto ... ..
23	7	Bhakti. Devotion. A monthly paper. 3rd year. Nos. 4 and 5 (together).	Edited by Dínabandhu Kávyatírtha Vedántaratna.	The British India Printing Works, Sitalátalá, Konrár Bagán; Howrah.
24	8	Ditto ditto. 3rd year. No. 6	Ditto ditto	Ditto ditto ... ..
25	1	Bándhava. Friend. A monthly paper. Vol. III. No. 7.	Edited by Káli Prasanna Ghosh ...	The Giris Press, Dacca ... ...
26	126	Bhárati. The Goddess of Speech. A monthly paper. Vol. XXVIII. No. 9.	Edited by Srímatí Saralá Devi ...	10, Haladhar Barddhan's Lane; 26, Baliganj Circular Road; Calcutta.
27	328	Ditto ditto. Vol. XXVIII. No. 10.	Ditto ditto	Ditto ditto ... ...
28	8	Dhúmaketu. Comet. A monthly paper. Vol. II. No. 9.	Edited by Nirad Chandra Gangopádhyáy.	The Isán Press; 19, Bechárám's Deuri, Dacca.
29	30	Ditto ditto. Vol. II. No. 10	Ditto ditto	Ditto ditto ... ..
30	2	Hániphí. An Organ of the Hániphí Sect. A monthly paper. 1st year. Nos. 6 and 7 (together).	Edited by M. S. Nural Hosen, Kásimpurí.	Mymensingh ... ...
31	2170	Ditto ditto. 1st year. Nos. 8 and 9 (together).	Ditto ditto ...	6, College Square, Calcutta ... ...
32	1	Hindu-Ranjan. Delightful to the Hindus. A monthly paper. Vol. I. Nos. 3 and 4 (together).	Edited by Rákhál Chandra Chaudhurí.	Contai ... ...
33	7	Janma Bhúmi. The Land of Birth. A monthly paper. 13th year. No. 4.	Edited by Yatíndra Náth Datta ...	39, Mánik Basu's Ghát Street, Calcutta
34	8	Ditto ditto. 13th year. No. 5	Ditto ditto ...	Ditto ditto ...
35	420	Ditto ditto. 13th year. No. 6	Ditto ditto ...	Ditto ditto ...
36	265	Jáhnaví. The Ganges. A monthly paper. 1st year. No. 7.	Edited by Nalini Ranjan Pandit ...	221, Cornwallis Street, Calcutta ...
37	30	Kalyání. The Auspicious One. A monthly paper. Vol. IV. No. 7.	Edited by Visvesvar Mukherjí ...	Magura, Jessore ... ...
38	32	Ditto ditto. Vol. IV. No. 8 ...	Ditto ditto ...	Ditto ... ...
39	3	Kámalá. (A Name.) A monthly paper. Vol. I. No. 9.	Edited by Yogendra Chandra Basu...	68, Bechu Chatterji's Street, Calcutta...
40	305	Ditto ditto. Vol. I. No. 10 ...	Ditto ditto ...	Ditto ditto ...
41	Letter No. 239	Káyastha Patriká. Journal relating to the Káyastha Caste. A monthly paper. 1st year. Nos. 7 and 8 (together).	Edited by Ramá Nath Ghosh ...	5, Rámdhon Mitra's Lane; 47, Páthuriyá Ghát Street; Calcutta.
42	,,	Ditto ditto. 1st year. Nos. 9 and 10 (together).	Ditto ditto ...	Ditto ditto ...
43	2158	Ditto ditto. 3rd year. Nos. 4 to 7 (together).	Edited by Nagendra Náth Basu ...	5, Rámdhon Mitra's Lane; 79-3, Cornwallis Street; Calcutta.
44	Letter No. 239	Krishak. The Agriculturist. A monthly paper. Vol. II. No. 9.	Edited by Nagendra Náth Svarnakár, M.A.	107, Cornwallis Street; 181, Upper Circular Road; Calcutta.
45	,,	Ditto ditto. Vol. II. No. 10 ...	Ditto ditto ...	Ditto ditto ...
46	,,	Ditto ditto. Vol. II. No. 11 ...	Ditto ditto ...	Ditto ditto ...
47	,,	Ditto ditto. Vol. II. No. 12 ...	Ditto ditto ...	Ditto ditto ...
48	,,	Ditto ditto. Vol. III. No. 1 ...	Ditto ditto ...	Ditto ditto ...
49	,,	Ditto ditto. Vol. III. No. 2 ...	Ditto ditto ...	Ditto ditto ...
50	,,	Ditto ditto. Vol. III. No. 3 ...	Ditto ditto ...	Ditto ditto ...
51	,,	Ditto ditto. Vol. III. No. 4 ...	Ditto ditto ...	Ditto ditto ...
52	,,	Ditto ditto. Vol. III. No. 5 ...	Ditto ditto ...	Ditto ditto ...
53	,,	Ditto ditto. Vol. III. No. 6 ...	Ditto ditto ...	Ditto ditto ...
54	,,	Ditto ditto. Vol. III. No. 7 ...	Ditto ditto ...	Ditto ditto ...
55	,,	Ditto ditto. Vol. III. No. 8 ...	Ditto ditto ...	Ditto ditto ...
56	,,	Ditto ditto. Vol. III. No. 9 ...	Ditto ditto ...	Ditto ditto ...
57	,,	Ditto ditto. Vol. III. Nos. 10 and 11 (together).	Ditto ditto ...	107, Cornwallis Street; 144, Bowbazar Street; Calcutta.
58	,,	Ditto ditto. Vol. III. No. 12 ...	Ditto ditto ...	Ditto ditto ...
59	,,	Ditto ditto. Vol. IV. No. 1 ...	Ditto ditto ...	Ditto ditto ...
60	,,	Ditto ditto. Vol. IV. No. 2 ...	Ditto ditto ...	Ditto ditto ...
61	,,	Ditto ditto. Vol. IV. No. 3 ...	Ditto ditto ...	Ditto ditto ...

First Quarter ending 31st March 1905—continued.

6	7	8	9	10	11	12	13
Name of firm, printer and of publisher.	Date of issue from the press or of the publication.	Size and number of sheets, leaves, or pages.	Number of edition and number of copies of which the edition consists.	Printed or lithog'd.	Price at which the book is sold to the public.	Name and residence of the proprietor of copyright, or any part of it.	Number and date of Registration of Copyright.
	1904.				Rs. A. P.		
Prabhát Chandra Datta; Sasibhúshan Chakravartí.	Dec. 6	Rl. 8vo; 24	1st; 2,000	P.	0 4 0	.....	
Ditto ditto	„ 13	Rl. 8vo; 24	1st; 2,000	P.	0 4 0	.....	
Hari Charan De; Krishna Dás Chandra.	Nov. 21	Dy. 8vo; 32	1st; 450	P.	0 2 0	.....	
Ditto ditto	Dec. 5	Dy. 8vo; 32	1st; 450	P.	0 2 0	.....	
Yogendra Nath Chakravarti; the editor.	„ 19 1905.	Dy. 8vo; 32	1st; 2,000	P.	0 2 0	.....	
Ditto ditto	Feb. 3	Dy. 8vo; 32	1st; 2,000	P.	0 2 0	.....	
Ditto ditto	„ 3	Dy. 8vo; 32	1st; 2,000	P.	0 2 0	.....	
Nilamani Dhar; the editor ...	„ 23 1904.	Dy. 8vo; 32	1st; 2,000	P.	0 2 0	.....	
Nilamani Dhar; the Alochaná Samiti.	Oct. 3	Dy. 8vo; 16	1st; 300	P.	0 2 6	.....	
Ditto ditto	Dec. 20 1905.	Dy. 8vo; 24	1st; 300	P.	0 2 6	.....	
Ditto ditto	Feb. 12	Dy. 8vo; 24	1st; 300	P.	0 2 6	.....	
Ditto ditto	„ 12	Dy. 8vo; 52	1st; 300	P.	0 2 6	.....	
Rajani Kánta Pandit	„ 11 1904.	Dy. 8vo; 32	1st; 750	P.	0 4 0	.....	
Giris Chandra Ghosh; the editors	Dec. 18	Rl. 12mo; 28	1st; 500	P.	0 1 0	.....	
Ditto ditto	„ 30 1905.	Rl. 12mo; 28	1st; 500	P.	0 1 0	.....	
Ditto ditto	Jan. 17	Rl. 12mo; 28	1st; 500	P.	0 1 0	.....	
Surendra Nath Bhattácharyya; the editor.	Feb. 5	Dy. 8vo; 32	1st; 1,000	P.	1 0 0 yearly.	The editor.	
Ditto ditto	„ 15	Dy. 8vo; 32	1st; 1,000	P.	...	Ditto.	
Harihar Nandí	Jan. 3 1904.	Rl. 8vo; 52	1st; 1,000	P.	0 8 0	.....	
B. K. Dás; Asutosh Banerji ...	Dec. 26 1905.	D.cr. 16mo; 96	1st; 1,250	P.	0 6 0	.....	
Ditto ditto	Jan. 23 1904.	D.cr. 16mo; 96	1st; 1,250	P.	0 6 0	.....	
Mathurá Nath De; the editor ...	Dec. 17 1905.	Dy. 12mo; 48	1st; 500	P.	0 2 0	.....	
Ditto ditto	Jan. 25	Dy. 12mo; 47	1st; 500	P.	0 2 0	.....	
Rajani Kánta Pandit	„ 16 1904.	Dy. 8vo; 48	1st; 700	P.	0 6 0	.....	
Nivárun Chandra Ghosh ...	Dec. 20 1905.	Dy. 8vo; 48	1st; 700	P.	.....	.....	
Baikuntha Náth Málti; Rákhál Chandra Chaudhurí.	Jan. 4 1904.	Rl. 8vo; 48	1st; 1,000	P.	1 0 0 yearly.	.....	
Narendra Nath Datta	Dec. 7	Dy. 8vo; 40	1st; 500	P.	0 2 6	.....	
Ditto ditto	„ 28 1905.	Dy. 8vo; 40	1st; 500	P.	0 2 6	.....	
Ditto ditto	Feb. 21	Dy. 8vo; 40	1st; 500	P.	0 2 6	.....	
Prahlád Chandra Dás; the editor...	Jan. 20	Dy. 8vo; 32	1st; 1,00	P.	1 0 0 yearly.	.....	
Rám Gopál Bhattácháryya ...	„ 8	Dy. 8vo; 32	1st; 1,000	P.	0 4 0	.....	
Ditto ditto	Feb. 8 1904.	Dy. 8vo; 32	1st; 1,000	P.	0 4 0	.....	
G. C. Basu & Co.	Dec. 15 1905	D.cr. 8vo; 48	1st; 1,000	P.	2 8 0 yearly.	.....	
Ditto ditto	Jan. 30	D.cr. 8vo; 48	1st; 1,000	P.	.....	.....	
A. N. Basu & Co.; the Vangadesíya Káyastha Sabhá.	.....	Dy. 8vo; 58	1st; 1,000	P.	2 0 0 yearly.	.....	
Ditto ditto ...	.....	Dy. 8vo; 64	1st; 1,000	P.	... ..	.....	
Ditto ditto	1904. Dec. 2	Dy. 8vo; 190	1st; 1,000	P.	2 0 0 yearly.	... ..	
Yadu Nath Sil; Sasi Bhúshan Mukherji.	... ..	D cr. 8vo; 24	1st; 1.000	P.	2 0 0 yearly.	.....	
Ditto ditto ...	.....	D.cr. 8vo; 24	1st;	P.	....	... ..	
Ditto ditto ...	.....	D.cr. 8vo; 24	1st; ...	P.	.....	.....	
Ditto ditto ...	.....	D.cr. 8vo; 24	1st; ...	P.	.....	.....	
Ditto ditto ...	.....	D.cr. 8vo; 24	1st; ...	P.	.....	.....	
Ditto ditto ...	... ..	D.cr. 8vo; 24	1st; ...	P.	.....	.....	
Ditto ditto ...	.....	D.cr. 8vo; 24	1st; ...	P.	.....	.....	
Ditto ditto ...	.....	D.cr. 8vo; 24	1st; ...	P.	.....	.....	
Ditto ditto ...	.....	D.cr. 8vo; 24	1st; ...	P.	.....	.....	
Ditto ditto ...	.....	D.cr. 8vo; 24	1st; ...	P.	.....	.....	
Ditto ditto ...	.....	D.cr. 8vo; 24	1st; ...	P.	.....	.....	
Ditto ditto ...	... ..	D.cr. 8vo; 24	1st; ...	P.	2 0 0 yearly.	.....	
Ditto ditto ...	.....	D.cr. 8vo; 24	1st; ...	P.	.....	.....	
Ditto ditto ...	.....	D.cr. 8vo; 24	1st; ...	P.	.....	.....	
Ditto ditto ...	.....	D.cr. 8vo; 24	1st; ...	P.	.....	.....	
Ditto ditto ...	.....	D.cr. 8vo; 24	1st; ...	P.	.....	.....	
Ditto ditto ...	.....	D.cr. 8vo; 24	1st; ...	P.	.....	.....	

1 Serial number.	2 Registration number.	3 Title, with an English translation of the same when not in that language, the language of the book, and the subject.	3 Name of author, translator, or editor of the book, or any part of it.	4 Place of printing and publication.
		I.—BENGALI PERIODICALS—contd.		
		MISCELLANEOUS—*contd.*		
62	Letter No. 239	Krishak. The Agriculturist. A monthly paper. Vol. IV. No. 4.	Edited by Nagendra Náth Svarnakár, M. A.	107, Cornwallis Street; 148, Bowbazar Street; Calcutta—
63	,,	Ditto ditto. Vol. IV. No. 5 ...	Ditto ditto ...	Ditto ditto ...
64	,,	Ditto ditto. Vol. IV. No. 6 ...	Ditto ditto ...	Ditto ditto ...
65	,,	Ditto ditto. Vol. IV. No. 7 ...	Ditto ditto ...	Ditto ditto ...
66	,,	Ditto ditto. Vol. IV. No. 8 .	Ditto ditto ..	Ditto ditto ...
67	,,	Ditto ditto. Vol. IV. No. 9 ...	Ditto ditto ...	Ditto ditto ...
68	,,	Ditto ditto. Vol. IV. No. 10 ...	Ditto ditto ...	Ditto ditto ...
69	,,	Ditto ditto. Vol. IV. No. 11 ...	Ditto ditto ...	Ditto ditto ...
70	,,	Ditto ditto. Vol. IV. No. 12 ...	Ditto ditto ...	Ditto ditto ...
71	,,	Ditto ditto. Vol. V. No. 1 ...	Ditto ditto ...	Ditto ditto ...
72	,,	Ditto ditto. Vol. V. No. 2 ...	Ditto ditto ...	Ditto ditto ...
73	,,	Ditto ditto. Vol. V. No. 3 ...	Ditto ditto ...	Ditto ditto ...
74	,,	Ditto ditto. Vol. V. No. 4 ...	Ditto ditto ...	Ditto ditto ...
75	,,	Ditto ditto. Vol. V. No. 5 ...	Ditto ditto ...	Ditto ditto ...
76	,,	Ditto ditto. Vol. V. No. 6 ...	Ditto ditto ...	Ditto ditto ...
77	92	Ditto ditto. Vol. V. No. 7 ...	Ditto ditto ...	Ditto ditto ...
78	91	Ditto ditto. Vol. V. No. 8 ...	Ditto ditto ...	Ditto ditto ...
79	90	Ditto ditto. Vol. V. No. 9 ...	Ditto ditto ...	Ditto ditto ...
80	354	Ditto ditto. Vol. V. No. 10 ...	Ditto ditto ...	Ditto ditto ...
81	168	Mahásakti. Great Power. A Fortnightly paper. 9th year. Nos. 5 to 8 (together).	Edited by Dr. K. P. Banerji ...	92; 91-9-1; Upper Chitpur Road, Calcutta
82	169	Ditto ditto. 9th year. Nos. 9 to 15 (together).	Ditto ditto ...	Ditto ditto ...
83	L. No. 239	Mahilá. Lady. A monthly paper. Vol. IX. No. 6.	Edited by Rev. Girís Chandra Sen...	3, Rama Náth Majumdár's Street, Calcutta.
84	2154	Ditto ditto. Vol. X. No. 5 ...	Ditto ditto ...	Ditto ditto ...
85	195	Ditto ditto. Vol. X. No. 6 ...	Ditto ditto ...	Ditto ditto ...
86	313	Ditto ditto. Vol. X. No. 7 ..	Ditto ditto ...	Ditto ditto ...
87	2138	Mukul. Blossom. A monthly paper. Vol. X. No. 7.	Edited by Hem Chandra Sarkár ...	5, Siva Náráyan Dás's Lane; 1, Raghu Náth Chatterji's Street; Calcutta.
88	65	Ditto ditto Vol. X. No. 8 ...	Ditto ditto ..	Ditto ditto ...
89	336	Ditto ditto Vol. X. No. 9 ...	Ditto ditto ...	Ditto ditto ...
90	2135	Nava Núr. New Light. A monthly paper, 2nd year. No. 8.	Edited by Maulvi Izidádul Hak, B.A.	115, Amherst Street; 143, Kadeyá Road; Entally; Calcutta.
91	68	Ditto ditto. 2nd year. No. 9 ...	Ditto ditto ...	Ditto ditto ...
92	256	Ditto ditto. 2nd year. No. 10 ...	Ditto ditto ...	Ditto ditto ...
93	144	Nava Prabhá. New Light. A monthly paper. Vol. IV. No. 6.	Edited by Jnánendra Lál Ráy and Harendra Lál Ráy.	63, Bechu Chatterji's Street, Calcutta; 16, Chandra Nath Chatterji's Street, Bhawanipur.
94	359	Navya Bhárat. New India. A monthly paper. Vol. XXII. Nos. 9 and 10 (together).	Edited by Devi Prasanna Ráy Chaudhuri.	30-5, Madan Mitra's Lane; 210-4, Cornwallis Street; Calcutta.
95	290	Pauthá. Path. A monthly paper. Vol. VIII. No. 7.	Edited by Krishna Dhan Mukerji, M.A., B.L., and Hírendra Náth Datta, M.A., B.L.	91, Upper Circular Road; 28-2, Jhámpukur Lane; Calcutta.
96	291	Ditto ditto. Vol. VIII. No. 8	Ditto ditto ...	Ditto ditto ..
97	36	Pathik. Traveller. A monthly paper. 1st year. No. 3.	Edited by Yogendra Náth Gupta ...	20, Cornwallis Street; 16, Phakir Chand Mitra's Street; Calcutta.
98	298	Ditto ditto. 1st year. No. 4 ...	Ditto ditto ...	Ditto ditto ...
99	386	Pravaha. Waves. A monthly paper. 1st year. No. 1.	Edited by Dámodar Mukerji ...	309, Upper Chitpur Road; 5, Vindu Pálit's Lane; Calcutta.
100	2140	Pravási. Sojourner. A monthly paper. Vol. IV. No. 8.	Edited by Rámánanda Chatterji ...	5, Siva Náráyan Dás's Lane, Calcutta...
101	66	Ditto ditto. Vol. IV. No. 9 ...	Ditto ditto ...	Ditto ditto ..
102	213	Ditto ditto. Vol. IV. No. 10 ...	Ditto ditto ...	Ditto ditto ...
103	330	Ditto ditto. Vol. IV. No. 11 ...	Ditto ditto ...	Ditto ditto ...
104	32	Púrnima. Full-moon. A monthly paper. 12th year. Nos. 6 and 7 (together).	Edited by Kshitíndra Náth Deva Ráy.	21, Valarám Ghosh's Street; 24, Simla Street; Calcutta.
105	34	Samálochaní. Review. A monthly paper. 3rd year. No. 7.	Edited by Sailes Chandra Majumdár	20, Cornwallis Street, Calcutta ...
106	35	Ditto ditto. 3rd year. No. 8 ...	Ditto ditto ...	Ditto ditto ...
107	L. No. 239	Sáhitya. Literature. A monthly paper. Vol. XIII. No. 3.	Edited by Suresh Chandra Samájpati	89, Simla Street, Calcutta ...
108	,,	Ditto ditto. Vol. XIII. No. 4 ...	Ditto ditto ...	Ditto ditto ...
109	,,	Ditto ditto. Vol. XIII. No. 5 ...	Ditto ditto ...	Ditto ditto ...
110	,,	Ditto ditto. Vol. XIII. No. 6 ...	Ditto ditto ...	8, Sambhu Chatterji's Lane; 89, Simla Street; Calcutta.
111	,,	Ditto ditto. Vol. XIII. No. 7 ...	Ditto ditto	89, Simla Street, Calcutta ...
112	,,	Ditto ditto. Vol. XIII. Nos. 8 to 10 (together).	Ditto ditto ...	Ditto ditto ...
113	,,	Ditto ditto. Vol. XIII. Nos. 11 and 12 (together).	Ditto ditto ...	Ditto ditto ...
114	2134	Ditto ditto. Vol. XV. No. 7 ...	Ditto ditto ...	7, Santiram Ghosh's Street; 29, Masjidbari Street; Calcutta.
115	196	Ditto ditto. Vol. XV. No. 8 ...	Ditto ditto ...	Ditto ditto ...

First Quarter ending 31st March 1905—continued.

6	7	8	9	10	11	12	13
Name or firm of printer and of publisher.	Date of issue from the press or of the publication.	Size and number of sheets, leaves, or pages.	Number of edition and number of copies of which the edition consists.	Printed or litho'd.	Price at which the book is sold to the public.	Name and residence of the proprietor copyright, or any part of it.	Number and date of Registration of Copyright.
					Rs. A. P.		
Yadu Nath Sil; Sasi Bhúshan Mukherji.	.....	D.cr. 8vo; 24	1st; ...	P.	.....	.....	
Ditto ditto ...	.....	D.cr. 8vo; 24	1st; ...	P.	.....	.....	
Ditto ditto ...	.....	D.cr. 8vo; 24	1st; ...	P.	.....	.....	
Ditto ditto ...	.....	D.cr. 8vo; 24	1st; ...	P.	.....	.....	
Ditto ditto ...	.....	D.cr. 8vo; 24	1st; ...	P.	.....	.....	
Ditto ditto ...	.....	D.cr. 8vo; 24	1st; ...	P.	.....	.....	
Ditto ditto ...	.....	D.cr. 8vo; 24	1st; ...	P.	.....	.....	
Ditto ditto ...	.....	D.cr. 8vo; 24	1st; ...	P.	.....	.....	
Ditto ditto ...	.....	D.cr. 8vo; 24	1st; ...	P.	.....	.....	
Ditto ditto ...	.....	D.cr. 8vo; 24	1st; ...	P.	.....	.....	
Ditto ditto ...	.....	D.cr. 8vo; 24	1st; ...	P.	.....	.....	
Ditto ditto ...	.....	D.cr. 8vo; 24	1st; ...	P.	.....	.....	
Ditto ditto ...	.....	D.cr. 8vo; 24	1st; ...	P.	.....	.....	
Ditto ditto ...	.....	D.cr. 8vo; 24	1st; ...	P.	.....	.....	
Ditto ditto ...	.....	D.cr. 8vo; 24	1st; ...	P.	.....	.....	
Ditto ditto ...	1904. Nov. 2	D.cr. 8vo; 24	1st; 750	P.	0 3 0	.....	
Ditto ditto ...	Dec. 23	D.cr. 8vo; 24	1st; 750	P.	0 3 0	.....	
Ditto ditto ...	1905. Jan. 10	D.cr. 8vo; 24	1st; 750	P.	0 3 0	.....	
Ditto ditto ...	Feb. 5	D.cr. 8vo; 24	1st; 750	P.	0 3 0	.....	
K. P. Banerji	1904. Dec. 28	Dy. 4to; 10	1st; 1,000	P.	0 0 6	.....	
Ditto	„ 28	Dy. 4to; 10	1st; 1,000	P.	0 0 6	.....	
K. P. Náth	..... 1904.	Rl. 8vo; 24	1st; ...	P.	2 0 0 yearly.	.....	
Ditto	Dec. 20 1905.	Rl. 8vo; 24	1st; 330	P.	.....	.....	
Ditto	Jan. 18	Rl. 8vo; 24	1st; 330	P.	.....	.....	
Ditto	Feb. 16 1904.	Rl. 8vo; 32	1st; 330	P.	.....	.....	
Púrna Chandra Dás; the Ravivásaríya Níti Vidyálay.	Dec. 8	D.cr. 8vo; 16	1st; 1,500	P.	1 8 0 yearly.	.....	
Ditto ditto ...	„ 26 1905.	D.cr. 8vo; 16	1st; 1,500	P.	.....	.....	
Ditto ditto ...	Feb. 2 1904.	D.cr. 8vo; 16	1st; 1,500	P.	.....	.....	
Náráyan Chandra Ghosh; Maulvi Asad Ali.	Nov. 24	Dy. 8vo; 48	1st; 1 000	P.	0 4 0	.....	
Ditto ditto ...	Dec. 15 1905.	Dy. 8vo; 52	1st; 1,000	P.	0 4 0	.....	
Ditto ditto ...	Jan. 28 1904.	Dy. 8vo; 52	1st; 1,000	P.	0 4 0	.....	
G. C. Basu & Co.; Jitendra Lál Ráy.	Dec. 20 1905.	Dy 8vo; 48	1st; 500	P.	2 8 0 yearly.	.....	
Bhút Nath Pálit; the editor ...	Feb. 22	Rl. 8vo; 112	1st; 2,500	P.	0 14 0	.....	
B. C. Sányál; Rájendra Lál Mukherji, M.A., B.L.	Jan. 20	Dy. 8vo; 40	1st; 1,000	P.	1 4 0 yearly.	.....	
Ditto ditto ...	„ 28 1904.	Dy. 8vo; 40	1st; 1,000	P.	0 2 0	.....	
Hari Charan Mánná; Sáradá Charan Sen Gupta	Dec. 28	Dy. 8vo; 32	1st; 300	P.	0 3 0	.....	
Ditto ditto ...	„ 28 1905.	Dy. 8vo; 32	1st; 300	P.	0 3 0	.....	
Chaturbhuj Bhatácháryya; Sádhu Charan Dás.	Feb. 21 1904.	Rl. 8vo; 40	2nd; 2,000	P.	0 4 0	.....	
Purna Chandra Dás ...	Dec. 14	D cr. 8vo; 56	1st; 1,750	P.	3 0 0 yearly.	.....	
Ditto	„ 24 1905.	D.cr. 8vo; 56	1st; 1,750	P.	.....	.....	
Ditto	Jan. 19	D.cr. 8vo; 56	1st; 1,750	P.	.....	.....	
Ditto	Feb. 17 1904.	D.cr. 8vo; 56	1st; 1,750	P.	.....	.....	
Kishori Mohan Sinha; the editor . .	Dec. 12	Dy. 8vo; 44	1st; 170	P.	0 4 0	.....	
Hari Charan Mánná; S. C. Majumdár.	„ 10	D.cr. 16mo; 32	1st; 1,000	P.	0 2 0	.....	
Ditto ditto. ...	„ 24	D.cr. 16mo; 32	1st; 1,000	P.	0 2 0	.....	
Ditto ; the editor ...	.....	Dy. 8vo; 64	1st; ...	P.	0 4 0	.....	
Ditto ditto ...	.....	Dy. 8vo; 4	1st; ...	P.	0 4 0	.....	
Ditto ditto ...	.....	Dy. 8vo; 68	1st; ..	P.	0 4 0	.....	
Devendra Nath Nandí; the editor	.....	Dy. 8vo; 64	1st; ...	P.	0 4 0	.....	
Ditto ; the editor	.....	Dy. 8vo; 68	1st; ...	P.	0 4 0	.....	
Ditto ditto ...	.....	Dy. 8vo; 190	1st; ...	P.	0 12 0	.....	
Ditto ditto ...	.. ... 1904.	Dy. 8vo; 114	1st; ...	P.	0 8 0	.....	
Upendra Nath De Bhuná; the editor.	Nov. 21	Dy. 8vo; 64	1st; 1,000	P.	0 6 0	.....	
Ditto ditto ...	Dec. 26	Dy. 8vo; 64	1st; 1,000	P.	0 6 0	.....	

1	2	3	4	5
Serial number.	Registration number.	Title, with an English translation of the same when not in that language, the language of the book, and the subject.	Name of author, translator, or editor of the book, or any part of it.	Place of printing and publication.
		I.—BENGALI PERIODICALS—contd.		
		MISCELLANEOUS—*contd.*		
116	309	Sáhitya Samhitá. A Compilation of Literature. Vol. V. Nos. 6 and 7 (together). ...	Edited by Kálí Prasanna Kávyavisárad.	19; 106-1; Grey Street, Calcutta ...
117	270	Ditto ditto. Vol. V. Nos. 8 and 9 (together).	Ditto ditto ...	32, Sukea's Street; 106-1, Grey Street; Calcutta.
118	148	Sevikā. Female Attendant. A monthly paper. Vol. VII. No. 2.	Edited by Mahendra Nath Tattvanidhi.	221, Cornwallis Street, Calcutta; Diamond Harbour.
119	395	Ditto ditto. Vol. VII. No. 3 ...	Ditto ditto ...	Ditto ditto ...
120	425	Silpa O Sáhitya. Art and Literature. A monthly paper. 4th year. No. 9.	Edited by Manmatha Nath Chakravarti.	17, Srináth Dás's Lane, Calcutta ...
121	„	Ditto ditto. 4th year. No. 10.	Ditto ditto ...	Ditto ditto ...
122	„	Ditto ditto. 4th year. No. 11.	Ditto ditto ...	Ditto ditto ...
123	„	Ditto ditto. 4th year. No. 12.	Ditto ditto ...	Ditto ditto ...
124	1	Támbuli Samáj. Támbuli Community. A monthly paper. 3rd year. Nos. 7 and 8 (together).	Edited by Sarat Chandra Datta, B.A., B.L., and Bhút Náth Pál, B.A.	The Nityánandoday Press, Chákápati, Chitpur, Kasipur, 24-Parganas.
125	2	Ditto ditto. No. 9 ...	Ditto ditto ...	Ditto ditto ...
126	2110	Udvodhan. Awakening. A fortnightly paper. 6th year. No. 20.	Edited by Svámí Suddhánanda ...	14, Rám Chandra Maitra's Lane, Calcutta.
127	2161	Ditto. ditto No. 21	Ditto ditto ...	Ditto ditto ...
128	39	Ditto. ditto No. 22	Ditto ditto ...	Ditto ditto ...
129	234	Ditto. 7th year. No. 1	Ditto ditto ...	Ditto ditto ...
130	306	Ditto. ditto No. 2	Ditto ditto ...	Ditto ditto ...
131	391	Ditto ditto No. 3	Ditto ditto ...	Ditto ditto ...
132	2126	Usá. Dawn. A monthly paper. 1st year. No. 8.	Edited by Upendra Náth Bhattácháryya.	25, Ráybágán Street, Calcutta; Kásipur, 24-Parganas.
133	183	Ditto ditto. 1st year. No. 9.	Ditto ditto ...	Ditto ditto ...
134	2139	Vangabhásha. Bengali Language. A monthly paper. Vol. II. No. 7.	Edited by Kumár Surendra Chandra Deva Barmá.	5, Siva Náráyan Dás's Lane, Calcutta; Agartolá, Tippera.
135	244	Ditto ditto. Vol. II. Nos. 8 and 9 (together).	Ditto ditto ...	Ditto ditto ...
136	37	Vanga Dársan. The Mirror of Bengal. A monthly paper. 4th year. No. 9.	Edited by Ravíndra Nath Tagore ...	20, Cornwallis Street, Calcutta ...
137	269	Ditto ditto. 4th year. No. 10	Ditto ditto ...	Ditto ditto ...
138	382	Ditto ditto. 4th year. No. 11	Ditto ditto ...	Ditto ditto ...
139	89	Vangíya Vanik. Bengali Trader. A monthly paper. New year. No. 1.	Edited by Nikunja Vihárí Dás ...	107, Cornwallis Street; 16, Tálábágán Lane, Calcutta.
140	177	Vasudhá. World. A monthly paper. 4th year. No. 7.	Edited by Annadá Prasád Ghoshál	78, Amherst Street; 22, Phakir Chánd Chakravarti's Lane; Calcutta.
141	178	Ditto ditto. 4th year. No. 8.	Ditto ditto ...	Ditto ditto ...
142	200	Vámábodhiní Patriká. Journal for the Instruction of Women. A monthly paper. No. 496.	Umes Chandra Datta	6, College Street Ryo Lane; 9, Anthony Bágán Lane; Calcutta.
143	5	Vírabhúmi. The Land of the Hero. A monthly paper. Vol. V. No. 2,	Edited by Nílaratan Mukherji, B.A.	80-5, Madan Mitra's Lane, Calcutta; Kirnáhár, Birbhum.
144	327	Ditto ditto. Vol. V. No. 3	Ditto ditto ...	Ditto ditto ...
145	426	Ditto ditto. Vol. V. No. 4	Ditto ditto ..	Ditto ditto ...
146	2147	Yogi-Sakhá. The Friend of the Yugi caste. A monthly paper. Vol. I. No. 4.	Edited by Adhar Chandra Náth ...	51-2, Sukea's Street; 27, Hadur Bágán Lane; Calcutta.
147	2146	Ditto ditto. Vol. I. No. 5	Ditto ditto ...	Ditto ditto ...

First Quarter ending 31st March 1905—continued.

6	7	8	9	10	11	12	13
Name or firm of printer and of publisher.	Date of issue from the press or of the publication.	Size and number of sheets, leaves, or pages.	Number of edition and number of copies of which the edition consists.	Printed or litho'd.	Price at which the book is sold to the public.	Name and residence of the proprietor of copyright, or any part of it.	Number and date of Registration of copyright.
	1905.						
Yogendra Nath Mallik; the Sáhitya Sabhá.	Jan. 14	Dy. 8vo; 128	1st; 600	P.	0 6 0	.....	
Prabhát Chandra Datta; the Sáhitya Sabhá.	,, 16	Dy. 8vo; 112	1st; 600	P.	0 6 0	.....	
	1904.						
Prahlád Chandra Dás; the editor.	Dec. 28	D.cr. 4to; 8	1st; 1,000	P.	1 0 0 yearly.	.....	
	1905.						
Ditto ditto ...	Mar. 1	D.cr. 4to; 8	1st; 1,000	P.	.....	.....	
Gopí Kánta Sen	Feb. 15	F.cap. 4to; 16	1st; 500	P.	1 0 0 yearly.	.....	
Ditto ditto ...	,, 15	F.cap. 4to; 16	1st; 500	P.	.....	.....	
Ditto ditto ...	,, 15	F.cap. 4to; 16	1st; 500	P.	.....	.....	
Ditto ditto ...	,, 15	F.cap. 4to; 16	1st; 500	P.	.....	.....	
	1904.						
Vinod Vihárí Dás; Bhát Náth Pál	Dec. 30	Dy. 8vo; 40	1st; 1,250	P.	0 4 0	Hírá Lal Datta, 2nd Set Lane, Chitpur.	
	1905.						
Ditto ditto ...	Jan. 28	Dy. 8vo; 16	1st; 1,250	P.	0 4 0	Ditto.	
	1904.						
Lál Chánd Datta; Girindra Lál Basák.	Dec. 3	Dy. 8vo; 32	1st; 1,200	P.	0 2 0	.....	
Ditto ditto ...	,, 16	Dy. 8vo; 32	1st; 1,200	P.	0 2 0	.....	
Ditto ditto ...	,, 31	Dy. 8vo; 32	1st; 1,200	P.	0 2 0	.....	
	1905.						
Lál Chánd Datta; the editor ...	Jan. 25	Dy. 8vo; 32	1st; 1,200	P.	0 2 0	.....	
Ditto ditto ...	Feb. 1	Dy. 8vo; 32	1st; 1,200	P.	0 2 0	.....	
Ditto ditto ...	,, 28	Dy. 8vo; 32	1st; 1,200	P.	0 2 0	.....	
	1904.						
Sányál & Co.; the editor ...	Dec. 13	D. fc. 8vo; 24	1st; 650	P.	1 8 0 yearly.	.....	
	1905.						
Ditto ditto ...	Jan. 17	D. fc. 8vo; 24	1st; 650	P.	.....	.....	
	1904.						
Púrna Chandra Dás; the editor ...	Dec. 16	D. cr. 8vo; 32	1st; 500	P.	2 0 0 yearly.	.....	
	1905.						
Ditto ditto ...	Jan. 21	D. cr. 8vo; 52	1st; 500	P.	.....	.....	
	1904.						
Hari Charan Mánná; S. C. Majumdár.	Dec. 25	Rl. 8vo; 52	1st; 1,250	P.	0 8 0	.....	
	1905.						
Ditto ditto ...	Jan. 25	Rl. 8vo; 48	1st; 1,250	P.	0 8 0	.....	
Ditto ditto ...	Feb. 25	Rl. 8vo; 46	1st; 1,250	P.	0 8 0	.....	
	1904.						
Yadu Náth Sil; Yajneswar Nandí...	Dec. 14	D. cr. 8vo; 16	1st; 1,000	P.	0 4 0	.....	
Amvika Charan Som; Vanku Vihárí Dhar.	,, 24	Dy. 8vo; 32	1st; 250	P.	1 8 0 yearly.	.....	
	1905.						
Ditto ditto ...	Jan. 1	Dy. 8vo; 32	1st; 250	P.	.....	.....	
	1904.						
Nanda Lál Chatterji; Sukumár Datta.	Dec. 29	Rl. 8vo; 48	1st; 900	P.	0 4 0	.....	
Bhát Náth Pálit; Devi Dás Bhattácháryya.	,, 28	Dy. 8vo; 40	1st; 1,000	P.	0 2 6	.....	
	1905.						
Ditto ditto ...	Feb. 11	Dy. 8vo; 40	1st; 1,000	P.	0 2 6	.....	
Ditto ditto ...	Mar. 10	Dy. 8vo; 40	1st; 1,000	P.	0 2 6	.....	
	1904.						
Hari Charan De; Hrishikes Náth	Nov. 26	Dy. 8vo; 20	1st; 1,000	P.	0 1 6	.....	
Ditto ditto ...	Dec. 14	Dy. 8vo; 16	1st; 1,000	P.	0 1 6	.....	

1		2	3	4
Serial number.	Registration number.	Title with an English translation of the same when not in that language, the language of the book, and the subject.	Name of author, translator, or editor of the book, or any part of it.	Place of printing and publication.
		I.—BENGALI PERIODICALS—concld.		
		MISCELLANEOUS—*concld.*		
148	2143	Yuvak. Young Man. A monthly paper. Vol. III. No. 12.	Edited by Yogánanda Prámánik ...	51-2, Sukea's Street, Calcutta; Santipur
149	2145	Ditto ditto. Vol. IV. No. 1	Ditto ditto ...	Ditto ditto ...
		RELIGION.		
150	2119	Krishtíya Bándhav. The Christian Friend A monthly paper. Vol. XXVI. No. 12.	Edited by T. W. Norledge ...	41, Lower Circular Road, Calcutta ...
151	160	Ditto ditto. Vol. XXVII. No. 1.	Ditto ditto ...	Ditto ditto ...
152	322	Ditto ditto. Vol. XXVII. No. 2.	Ditto ditto ...	Ditto ditto ...
153	127	Nava Vidhán. The New Dispensation. A monthly paper. Vol. XI. No. 11.	Edited by Chiranjív Sarmá ...	2, Goábágán Street, Calcutta ...
154	365	Ditto ditto. Vol. XI. No. 12.	Ditto ditto ...	Ditto ditto ...
155	231	Srí Srí Vaishnav-Sangíní. Female Companion to the Vaishnavas. A quarterly paper Vol. I. No. 1.	Edited by Madhu Súdan Adhikárí ...	104, Cornwallis Street, Calcutta; Hugli.
		II.—ENGLISH PERIODICALS.		
		LAW.		
1	2107	Indian Case and Comment. A monthly paper. Vol. I. No. 10.	Edited by A. C. Mitra, B.A., B.L.	3 to 5, Bow Street, Calcutta; ...
2	301	Ditto ditto. Vol. I. No. 11 ...	Ditto ditto ...	Ditto ditto ...
3	302	Ditto ditto. Vol. I. No. 12 ...	Ditto ditto ...	Ditto ditto
4	409	Ditto ditto. Vol. II. No. 1 ...	Ditto ditto ...	Ditto ditto ...
5	446	The Calcutta Law Journal. A fortnightly paper. Vol. I., No. 1.	Edited by Jnánendra Náth Basu, B.L., and Priya Nath Sen, M.A., B.L.	45, Benetolá Lane; 7, Old Post Office Street; Calcutta.
6	447	Ditto ditto. Vol. I. No. 2 ...	Ditto ditto ...	Ditto ditto ...
		MEDICINE.		
7	181	Naya Chikitsá Vijnán. The New Science of Medicine. A monthly paper. Vol. VII. No. 7.	Edited by Dr. Rádhá Mádhav Háldár.	43, Vindávan Basák's Street; 79, Ahíritolá Street; Calcutta.
8	2164	The Calcutta Journal of Medicine. A monthly paper. Vol. XXIII. No. 10.	Edited by Dr. Amrita Lál Sarkár ...	51, Sánkáritolá Lane, Calcutta, ...
9	120	Ditto ditto Vol. XXIII. No. 11	Ditto ditto ...	Ditto ditto ...
10	284	Ditto ditto Vol. XXIII. No. 12	Ditto ditto ...	Ditto ditto ...
11	388	Ditto ditto Vol. XXIV. No. 1 ...	Ditto ditto ...	Ditto ditto ...
12	58	The Indian Homœopathic Review. A monthly paper. Vol. XIII. No. 10.	Edited by P. C. Majumdár, M.D. and J. N. Majumdár M.D.	3-4, Gauí Mohan Mukherji's Street; 203-1, Cornwallis Street; Calcutta.
13	59	Ditto ditto Vol. XIII. No. 11	Ditto ditto	Ditto ditto ...
14	226	The Indian Lancet. A weekly paper. Vol. XXIV. No. 1.	Edited by Lawrence Fernandez, M. D.	3, Wellesly Street, Calcutta ...
15	,,	Ditto ditto Vol. XXIV. No. 5	Ditto ditto ...	Ditto ditto ...
16	,,	Ditto ditto Vol. XXIV. No. 7	Ditto ditto ...	Ditto ditto ...
17	,,	Ditto ditto Vol. XXIV. No. 8	Ditto ditto ...	Ditto ditto. ...
18	,,	Ditto ditto Vol. XXIV. No. 10	Ditto ditto ...	Ditto ditto ...
19	227	Ditto ditto Vol. XXIV. No. 12	Ditto ditto ...	Ditto ditto ...
20	,,	Ditto ditto Vol. XXIV. No. 13	Ditto ditto ...	Ditto ditto ...
21	,,	Ditto ditto Vol. XXIV. No. 14	Ditto ditto ...	Ditto ditto ...
22	,,	Ditto ditto Vol. XXIV. No. 15	Ditto ditto ...	Ditto ditto ...
23	,,	Ditto ditto Vol. XXIV. No. 16	Ditto ditto ...	Ditto ditto ..
24	,,	Ditto ditto Vol. XXIV. No. 17	Ditto ditto ...	Ditto ditto ...
25	228	Ditto ditto Vol. XXIV. No. 18	Ditto ditto ...	Ditto ditto ...
26	,,	Ditto ditto Vol. XXIV. No. 19	Ditto ditto ...	Ditto ditto ..
27	,,	Ditto ditto Vol. XXIV. No. 20	Ditto ditto ...	Ditto ditto ..
28	,,	Ditto ditto Vol. XXIV. No. 21	Ditto ditto ...	Ditto ditto ...
29	,,	Ditto ditto Vol. XXIV. No. 22	Ditto ditto ...	Ditto ditto ...
30	229	Ditto ditto Vol. XXIV. No. 23	Ditto ditto ...	Ditto ditto ...
31	,,	Ditto ditto Vol. XXIV. No. 24	Ditto ditto ...	Ditto ditto ...
32	,,	Ditto ditto Vol. XXIV. No. 25	Ditto ditto ..	Ditto ditto ...
33	,,	Ditto ditto Vol. XXIV. No. 26	Ditto ditto ...	Ditto ditto ...
34	230	Ditto ditto Vol. XXV. No. 1	Ditto ditto ...	Ditto ditto ...
35	,,	Ditto ditto Vol. XXV. No. 2	Ditto ditto ...	Ditto ditto ...
36	,,	Ditto ditto Vol. XXV. No. 3	Ditto ditto ..	Ditto ditto ...
37	,,	Ditto ditto Vol. XXV. No. 4	Ditto ditto ...	Ditto ditto ...
38	444	Ditto ditto Vol. XXV. No. 9	Ditto ditto ...	Ditto ditto ...
39	,,	Ditto ditto Vol. XXV. No. 10	Ditto ditto ...	Ditto ditto ...

First Quarter endi g 31st March 1905—continued.

6	7	8	9	10	11	12	13
Name of firm of printer and of publisher.	Date of issue from the press or of the publication	Size and number of sheets, leaves, or pages.	Number of edition and number of copies of which the edition consists.	Printed or litho'd.	Price at which the book is sold to the public.	Name and residence of the proprietor or copyright, or any part of it.	Number and date of Registration of Copyright.
	1904.				Rs. A. P.		
Hari Charan De; the editor ..	Nov. 25	Dy. 8vo; 16	1st; 250	P.	0 1 0	.....	
Ditto ditto ...	Dec. 7	Dy. 8vo; 16	1st; 250	P.	0 1 0	.....	
Rev. Percy Knight	Dec. 1	Rl. 8vo; 24	1st; 450	P.	0 1 0	.....	
Ditto	„ 20	Rl. 8vo; 24	1st; 450	P.	0 1 0	.....	
Ditto	1905. Jan. 28	Rl. 8vo; 24	1st; 450	P.	0 1 0	.....	
Śrinś Charan Ka.	1904. Dec. 25	Dy. 8vo; 12	1st; 500	P.	.....	.....	
Ditto	1905. Feb. 7	Dy. 8vo; 12	1st; 500	P.	.....	.....	
Náráyan Chandra Bhattáchárjya; the Ánanda Asram.	Jan. 21	Dy. 8vo; 40	1st; 1,000	P.	0 3 0	.....	
B. Barál	1904. Dec. 5	Rl. 8vo; 16	1st; 1,000	P.	0 2 0	.....	
Ditto	1905. Jan. 20	Rl. 8vo; 16	1st; 1,000	P.	0 2 0	.....	
Ditto	Feb. 3	Rl. 8vo; 16	1st; 1,000	P.	0 2 0	.....	
Ditto	„ 27	Rl 8vo; 16	1st; 1,000	P.	0 2 0	.....	
K. Lahirí & Co., the Calcutta Law Journal Office.	„ 16	Rl. 8vo; 64	1st; 1,000	P.	0 12 0	.....	
Ditto ditto ...	Mar. 1	Rl. 8vo; 64	1st; 2,000	P.	0 12 0	.....	
Ajay Krishna Sarkár; P. M. Háldár.	Jan. 19	Rl. 8vo; 8	1st; 250	P.	0 12 0	.....	
Panchanan Sarkár	1904. Dec. 22	Dy. 8vo; 44	1st; 150	P.	10 0 0 yearly.	.....	
Ditto ditto	1905. Jan. 12	Dy. 8vo; 44	1st; 150	P.	.....	.....	
Ditto ditto	Feb. 2	Dy. 8vo; 44	1st; 150	P.	.....	.....	
Ditto ditto	„ 28	Dy. 8vo; 44	1st; 150	P.	.....	.....	
Mukherji and Chatterji; J. N. Majumdár.	1904. Dec. 17	Dy. 8vo; 32	1st; 300	P.	0 8 0	.....	
Ditto ditto ...	„ 31	Dy. 8vo; 32	1st; 300	P.	0 8 0	.....	
The editor	July 4	Dy. 4to; 44	1st; 2,650	P.	0 8 0	.....	
Ditto	Aug. 4	Dy. 4to; 44	1st; 2,650	P.	0 8 0	.....	
Ditto	„ 15	Dy. 4to; 44	1st; 2,650	P.	0 8 0	.....	
Ditto	„ 22	Dy. 4to; 44	1st; 2,650	P.	0 8 0	.....	
Ditto	Sept. 5	Dy. 4to; 44	1st; 2,650	P.	0 8 0	.....	
Ditto	„ 19	Dy. 4to; 44	1st; 2,650	P.	0 8 0	.....	
Ditto	„ 26	Dy. 4to; 44	1st; 2,650	P.	0 8 0	.....	
Ditto	Oct. 3	Dy. 4to; 44	1st; 2,650	P.	0 8 0	.....	
Ditto	„ 10	Dy. 4to; 44	1st; 2,650	P.	0 8 0	.....	
Ditto	„ 17	Dy. 4to; 44	1st; 2,650	P.	0 8 0	.....	
Ditto	„ 24	Dy. 4to; 44	1st; 2,650	P.	0 8 0	.....	
Ditto	„ 31	Dy. 4to; 44	1st; 2,650	P.	0 8 0	.....	
Ditto	Nov. 7	Dy. 4to; 44	1st; 2,650	P.	0 8 0	.....	
Ditto	„ 14	Dy. 4to; 44	1st; 2,650	P.	0 8 0	.....	
Ditto	„ 21	Dy. 4to; 44	1st; 2,650	P.	0 8 0	.....	
Ditto	„ 28	Dy. 4to; 44	1st; 2,650	P.	0 8 0	.....	
Ditto	Dec. 5	Dy. 4to; 44	1st; 2,650	P.	0 8 0	.....	
Ditto	„ 12	Dy. 4to; 44	1st; 2,650	P.	0 8 0	.....	
Ditto	„ 19	Dy. 4to; 44	1st; 2,650	P.	0 8 0	.....	
Ditto	„ 26	Dy. 4to; 40	1st; 2,650	P.	0 8 0	.....	
Ditto	1905. Jan. 2	Dy. 4to; 42	1st;	P.	0 8 0	.....	
Ditto	„ 9	Dy. 4to; 44	1st;	P.	0 8 0	.....	
Ditto	„ 16	Dy. 4to; 44	1st;	P.	0 8 0	.....	
Ditto	„ 23	Dy. 4to; 44	1st; 2,650	P.	0 8 0	.....	
Ditto	Feb. 27	Dy. 4to; 44	1st; 2,650	P.	0 8 0	.....	
Ditto	Mar. 6	Dy. 4to; 44	1st; 2,650	P.	0 8 0	.....	

1 Serial number.	2 Registration number.	3 Title, with an English translation of the same when not in that language, the language of the book, and the subject.	4 Name of author, translator, or editor of the book, or any part of it.	5 Place of printing and publication.
		***II.—ENGLISH PERIODICALS*—contd.**		
		MISCELLANEOUS—*concld.*		
40	21	China Dragon. A monthly paper. Vol. I. No. 11.	Edited by J. Maxwell Craigie ...	4, 5, and 6, British Indian Street, Calcutta.
41	285	Ditto ditto. Vol. II. No. 1 ...	Ditto ditto ...	Ditto ditto ...
42	300	Industrial India. A monthly paper. Vol. I. Nos. 11 and 12 (together).	Edited by Prithvesvar Ráy ...	3, Humáyun Place; 37, Benetolá Lane Calcutta.
43	24	Journal of the Asiatic Society of Bengal. Vol. LXXIII. Part I. No. 4—1904.	Edited by the Philological Secretary	41 Lower Circular Road; 57, Park Street; Calcutta.
44	25	Ditto ditto. Vol. LXXIII. Part II. No. 4—1904.	Edited by the Natural History Secretary.	Ditto ditto
45	158	Ditto ditto. Vol. LXXIII. Part II. No. 5—1904.	Ditto ditto ...	Ditto ditto
46	315	Ditto ditto. Vol. LXXIII. Part III. No. 4—1904.	Edited by the Anthropological Secretary.	Ditto ditto
47	3	Medical Missions in India. A Quarterly Journal. Vol. X. No. 40.	Edited by J. M. Macphail, M.A., M.D.	The Santal Mission Press, Pokhuria, Manbhum.
48	405	Stamps. A quarterly paper. For January 1905.	Edited by B. Gordon-Jones ...	12, British Indian Street; 7, Mango Lane; Calcutta.
49	358	The Bengal Review. A monthly paper. Vol. I. No. 1.	Edited by Sambhu Chandra De, B.A., B.L.	17, Madan Mitra's Lane; 162, Bowbazar Street; Calcutta.
50	1	The Gardener's Magazine. A monthly paper. Vol. VII. No. 1.	Edited by B. M. Ráy	The New Town Press, Bhawanipur Gopálnagar Road, Chetla; Alipur.
51	6	Ditto ditto. Vol. VII. No. 2 ...	Ditto	Ditto ditto
52	7	Ditto ditto. Vol. VII. No. 3 ...	Ditto	Ditto ditto
53	78	The Indian Economist. A monthly paper. Vol. I. No. 1.	.....	11, Harrison Road, Calcutta
54	353	Ditto ditto. Vol. I. No. 2 ...	.....	Ditto ditto
55	L. No 239	The Indian Trade Journal and the Indian Manufacturer's Advertiser. A monthly paper. Vol. I. No. 1.	.....	27, Benares Road, Sálkiá, Howrah ...
56	,,	Ditto ditto. Vol. I. No. 2 ...	.....	Ditto ditto
57	,,	Ditto ditto. Vol. I. No. 3 ..	.....	Ditto ditto
58	,,	Ditto ditto. Vol. I. No. 4 ...	.....	Ditto ditto
59	,,	Ditto ditto. Vol. I. No. 5 ...	.....	Ditto ditto
60	,,	Ditto ditto. Vol. I. No. 6 ...	.....	Ditto ditto
61	,,	Ditto ditto. Vol. I. No. 7 ...	.....	Ditto ditto
62	,,	Ditto ditto. Vol. I. No. 8 ...	.....	Ditto ditto
63	,,	Ditto ditto. Vol. I. No. 9 ...	.....	Ditto ditto
64	,,	Ditto ditto. Vol. I. Nos. 10 and 11 (together).	.....	Ditto ditto
65	2	The Indian Trade Journal. A monthly paper. Vol. II. No. 2.	Edited by Surendra Náth Mukherji	The Salkea Printing Works, Kaldáng Lane; 27, Benares Road; Salkia Howrah.
66	10	Ditto ditto. Vol. II. No. 3 ...	Ditto ditto ...	Ditto ditto ...
67	11	Ditto ditto. Vol. II. No. 4 ...	Ditto ditto ...	Ditto ditto ...
68	12	Ditto ditto. Vol. II. No. 5 ...	Ditto ditto ...	Ditto ditto ...
69	14	The Inquirer. A monthly paper. Vol. I. No. 1.	Edited by Yogendra Náth Chatterji	The Salkia Printing Works, Kaldáng Lane, Sálkia, Howrah.
70	2130	The Maha Bodhi and the United Buddhist World. A monthly paper. Vol. XIII. Nos. 7 and 8 (together).	Edited by Anagárika H. Dharmapála	4, Dalhousie Square, Calcutta; Benares Cantonment.
71	166	The National Magazine. A monthly paper. Vol. XVIII. No. 7.	Edited by Kálí Prasanna De ...	10, Sambhu Chandra Chatterji's Street; 32, Kálí Das Sinha's Lane; Calcutta.
72	360	Ditto ditto. Vol. XVIII. No. 8	Ditto ditto ...	Ditto ditto
73	197	The Oriental. A monthly paper. Vol. VII. No. 2.	Edited by Manmatha Náth Datta ...	40, Nayan Chánd Datta's Street, Calcutta
74	198	Ditto ditto. Vol. VII. No. 3 ...	Ditto ditto ...	Ditto ditto ...
75	380	Ditto ditto. Vol. VII. No. 4 ...	Ditto ditto ...	Ditto ditto ...
76	381	Ditto ditto. Vol. VII. No. 5 ...	Ditto ditto ...	Ditto ditto ...
77	20	Tent. A weekly paper. Vol. I. No. 6 ...	Edited by C. R. P. Roberts ...	4, 5, and 6, British Indian Street Calcutta.
78	96	Ditto ditto Vol. I. No. 7 ...	Ditto ditto ...	Ditto ditto ...
79	167	Ditto ditto Vol. I. No. 8 ...	Ditto ditto ...	Ditto ditto ...
		RELIGION.		
80	2122	Indian Christian Endeavour. A monthly paper. Vol. I. No. 6.	Edited by Rev. W. Carey ...	41, Lower Circular Road; 135, Dharmatalá Street; Calcutta.
81	165	Ditto ditto. Vol. I. No. 7 ...	Ditto ditto ...	Ditto ditto ...
82	323	Ditto ditto. Vol. I. No. 8 ...	Ditto ditto ...	Ditto ditto ...
83	2117	Monthly News Letter. A monthly paper. Vol. XVIII. No. 12.	Edited by Rev. H. Anderson ...	41, Lower Circular Road, Calcutta ...
84	153	Ditto ditto. Vol. XIX. No. 1 ...	Ditto ditto ...	41, Lower Circular Road; 48, Ripon Street; Calcutta.
85	320	Ditto ditto. Vol. XIX. No. 2 ...	Ditto ditto ...	Ditto ditto ...

irst Quarter ending 31st March 1905—continued.

6	7	8	9	10	11	12	13
ame or firm of printer and of publisher.	Date of issue from the press or of the publication.	Size and number of sheets, leaves, or pages.	Number of edition and number of copies of which the edition consists.	Printed or litho'd.	Price at which the book is sold to the public.	Name and residence of the proprietor or copyright, or any part of it.	Number and date of Registration of Copyright.
	1904.				Rs. A. P.		
as. Bury	Dec. 22	Dy. 4to; 36	1st; 1,000	P.	0 4 0	.....	
	1905.						
... ...	Jan. 27	Dy. 4to; 28	1st; 1,000	P.	0 4 0	.....	
h Dás; the Society ouragement of Indian	„ 26	Rl. 8vo; 40	1st; 400	P.	2 0 0 yearly.	.....	
	1904.						
Knight; the Asiatic Bengal.	Dec. 23	Rl. 8vo; 98	1st; 650	P.	.....	.....	
ditto ...	„ 14	Rl. 8vo; 52	1st; 650	P.	.....	.....	
ditto ...	„ 31	Rl. 8vo; 24	1st; 650	P.	.....	.....	
	1905.						
ditto ...	Jan. 23	Rl. 8vo; 22	1st; 650	P.	.....	.....	
...	„ 4	Dy. 8vo; 30	1st; 400	P.	1 2 0 yearly.	.....	
Náth ,De; the Calcutta Company.	„ 23	Rl. 8vo; 8	1st; 500	P.	0 12 0 yearly.	.....	
nta; M. M. De ...	„ 31	Dy. 8vo; 16	1st; 1,000	P.	1 8 0 yearly.	.....	
Náth Mitra; B. M. Ráy	„ 13	Dy. 8vo; 12	1st; 500	P.	0 4 0	B. M. Ráy, Chetlá, Alipur 24-Parganas.	
ditto ...	Feb. 20	Dy. 8vo; 12	1st; 500	P.	0 4 0	Ditto ditto.	
ditto ...	Mar. 15	Dy. 8vo; 12	1st; 500	P.	0 4 0	Ditto ditto.	
	1904.						
u & Co., ...	Dec. 31	D.cr. 8vo; 48	1st; 500	P.	0 4 0	.....	
ditto	„	D.cr. 8vo; 44	1st; 500	P.	2 0 0 yearly.	.....	
kherji	.....	Rl. 8vo; 20	1st; ...	P.	3 0 0 quarterly	.....	
... ...	.....	Rl. 8vo; 20	1st; ...	P.	.....	.....	
... ...	.....	Rl. 8vo; 20	1st; ...	P.	.....	.....	
... ...	.....	Rl. 8vo; 24	1st; ...	P.	.....	.....	
Ditto	.....	Rl. 8vo; 24	1st; ...	P.	.....	.....	
Ditto	.....	Rl. 8vo; 24	1st; ...	P.	.....	.....	
Ditto	.....	Rl. 8vo; 24	1st; ...	P.	.....	.....	
Ditto	.....	Rl. 8vo; 24	1st; ...	P.	.....	.....	
Ditto	.....	Rl. 8vo; 24	1st; ...	P.	.....	.....	
Ditto	.....	Rl. 8vo; 22	1st; ...	P.	.....	.....	
Ditto	.....	Rl. 8vo; 16	1st; ...	P.	.....	.....	
	1905.						
Sarat Chandra Mukherji ...	Jan. 21	D.fc. 4to; 10	1st; 250	P.	1 8 0 yearly.	The editor, 27, Benares Road and Amrita Lál Kundu, Kaldángá Lane, Sálkia, Howrah.	
Ditto ...	Feb. 27	D.fc. 4to; 10	1st; 250	P.	.....	Ditto ditto.	
Ditto ...	„ 27	D.fc. 4to; 10	1st; 250	P.	.....	Ditto ditto.	
Ditto ...	„ 27	D.fc. 4to; 10	1st; 250	P.	.....	Ditto ditto.	
Surendra Náth Kundu	Mar. 2	Rl. 8vo; 16	1st; 250	P.	1 0 0 yearly.	Chatterjí and Friend, 90, Beadon Street, Calcutta.	
	1904.						
S. Parrott; the editor	Dec. 15	Dy. 4to; 14	1st; 750	P.	2 0 0 yearly.	.....	
	1905.						
U. Rakshit; K. P. De	Jan. 16	Rl. 8vo; 45	1st; 1,000	P.	1 0 0	.....	
Ditto	Feb. 11	Rl. 8vo; 45	1st; 1,000	P.	1 0 0	.....	
Hari Charan Dás; the Society for the Resuscitation of Indian Literature.	Jan. 19	Rl. 8vo; 24	1st; 1,200	P.	2 0 0 yearly.	.....	
Ditto ditto ...	„ 22	Rl. 8vo; 24	1st; 1,200	P.	.....	.....	
Ditto ditto ...	Feb. 25	Rl. 8vo; 24	1st; 1,200	P.	.....	.....	
Ditto ditto ...	„ 28	Rl. 8vo; 24	1st; 1,200	P.	.....	.....	
	1904.						
Erasmus Jones	Dec. 31	Dy. 8vo; 16	1st; 150	P.	0 2 0	.....	
	1905.						
Ditto	Jan. 7	Dy. 8vo; 12	1st; 150	P.	0 2 0	.....	
Ditto	„ 14	Dy. 8vo; 12	1st; 150	P.	0 2 0	.....	
	1904.						
Rev. Percy Knight; Rev. A. E. Summer.	Nov. 26	D.cr. 8vo; 12	1st; 600	P.	1 8 0 yearly.	.....	
Ditto ditto ...	Dec. 23	D.cr. 8vo; 12	1st; 600	P.	.....	.....	
	1905.						
Ditto ditto ...	Jan. 28	D.cr. 8vo; 12	1st; 600	P.	.....	.....	
	1904.						
Rev. Percy Knight	Dec. 3	Dy. 4to; 4	1st; 300	P.	.....	.....	
Rev. Percy Knight; the editor ...	„ 31	Dy. 4to; 4	1st; 300	P.	.....	.....	
	1905.						
Ditto ditto ...	Feb. 1	Dy. 4to; 4	1st; 300	P.	.....	.....	

1 Serial number.	2 Registration number.	3 Title with an English translation of the same when not in that language, the language of the book, and the subject.	4 Name of author, translator, or editor of the book, or any part of it.	5 Place of printing and publication.
		***II—ENGLISH PERIODICALS*—concld.**		
		RELIGION—*concld.*		
86	2120	Monthly Record of News and Notes. A monthly paper. For December, 1904.	Edited by Rev. H. Ryland Brown ...	41, Lower Circular Road, Calcutta & Darjeeling.
87	162	Ditto ditto. For January, 1905 ..	Ditto ditto ...	Ditto ditto
88	375	Ditto ditto. For February, 1905 ...	Ditto ditto ...	Ditto ditto
89	28	Our Bond. A monthly paper. Vol. X. No. 12.	Edited by Rev. J. Takle ...	41, Lower Circular Road, Calcutta & Brahmanbaria.
90	280	Ditto ditto. Vol. XI. No. 1 ...	Ditto ditto ...	41, Lower Circular Road, Calcutta
91	377	Ditto ditto. Vol. XI. No. 2 ...	Ditto ditto ...	Ditto ditto
92	150	The Evangelist. A monthly paper. For December, 1904.	Edited by Rev. B. A. Nág ...	86, College Street; 29, Harrison Road Calcutta.
93	29	The India Sunday School Journal. A monthly paper. Vol. XV. No. 1	Edited by Rev. R. Burges ...	41, Lower Circular Road, Calcutta
94	281	Ditto ditto. Vol. XV. No. 2 ...	Ditto ditto ...	Ditto ditto
95	376	Ditto ditto. Vol. XV. No. 3 ...	Edited by Rev. D. E. Evans ...	Ditto ditto
96	151	The Inquifer. A monthly paper. Vol. VI. No. 4.	Edited by J. N. Farquhar ...	86, College Street, Calcutta
97	152	Ditto ditto. Vol. VI. No. 5 ...	Ditto ditto ...	Ditto ditto ...
98	251	The Oriental Watchman. A monthly paper. Vol. VII. No. 12.	Edited by J. L. Shaw ...	38; 39-1; Free School Street, Calcutta
99	252	Ditto ditto. Vol. VIII. No. 1	Ditto ...	Ditto ditto ...
100	2121	The Young Men of India. A monthly paper. Vol. XV. No. 12.	Edited by B. R. Barber ...	41, Lower Circular Road; 86, College Street; Calcutta.
101	164	Ditto ditto. Vol. XVI. No. 1...	Ditto ditto ...	Ditto ditto ...
102	318	Ditto ditto. Vol. XVI. No. 2	Ditto ditto ...	Ditto ditto ...
103	2105	Vox Domini. A monthly paper. No. 4 ...	Edited by C. T. Gronon ...	59, Mirzapur Street; 39, Park Street, Calcutta.
104	104	Ditto ditto. No. 5	Ditto ditto ...	Ditto ditto ...
105	361	Ditto ditto. No. 6	Ditto ditto ...	Ditto ditto ...
		III.—GARO PERIODICALS.		
		RELIGION.		
1	163	Achikani Ripeng. A monthly paper. Vol. XXIV. No. 12.	Edited by Rev. M. C. Mason ...	41, Lower Circular Road, Calcutta; Tura, Assam.
2	319	Ditto ditto. Vol. XXV. No. 1	Ditto ditto	Ditto ditto ... ..
		IV.—HINDI PERIODICALS.		
		MISCELLANEOUS.		
1	85	Nárad. (A Name). A monthly paper. Vol. I. No. 5.	Edited by G. P. Barma	The Khadgavilás Press, Bankipur ...
2	86	Ditto ditto. Vol. I. No. 6 ...	Ditto ditto	Ditto ditto ...
3	26	Upanyás Kusumánjali. A Palmful of Flowers of Story. A monthly paper. 1st year. No. 6.	Edited by Ananda Vihári. Varman	Ga ya ... .
4	2127	Vaisyopakárak Beneficial to the Vaisyas. A monthly paper. 1st year. No. 8.	Edited by Rám Lál Numáni ...	59, Cotton Street, Calcutta .. ...
5	2128	Ditto ditto. 1st year. No. 9 ...	Ditto ditto	Ditto ditto ... ...
		RELIGION.		
6	2118	Chhotá Nágpur Dút Patriká. The Chotá Nágpur Messenger. A monthly paper. For December, 1904. (O).	Edited by Pandit Bholá Náth ...	41, Lower Circular Road, Calcutta; Ránchi.
7	161	Ditto ditto. For January, 1905	Ditto ditto	Ditto ditto ... ..
8	317	Ditto ditto. For February, 1905	Ditto ditto	Ditto ditto ... ...
		V.—SANSKRIT PERIODICALS.		
		MISCELLANEOUS.		
1	293	Vidyoday. The Dawn of Learning. A monthly paper. Vol. XXXIII. Nos. 7 to 9 (together).	Edited by Hrishikes Sástrí ...	119, Old Baitakkhána, Bazar Road, Calcutta.
		VI.—URDU PERIODICALS.		
		RELIGION.		
1		Makhzán-i-Tahqiq. Collection of Enquiries. A monthly paper. Vol. VIII. No. 10.	Ziáuddin	The Hánifiá Press, Bakshi Mahallá, Patna City.
2		Ditto ditto Vol. VIII. No. 11	Ditto	Ditto ditto ...
3		Ditto ditto Vol. VIII. No. 12	Ditto	Ditto ditto ...

First Quarter ending 31st March 1905—continued.

6	7	8	9	10	11	12	13
Name or firm of printer and of publisher.	Date of issue from the press or of the publication.	Size and number of sheets, leaves, or pages.	Number of edition and number of copies of which the edition consists.	Printed or lithog.	Price at which the book is sold to the public.	Name and residence of the proprietor of copyright, or any part of it.	Number and date of Registration of Copyright.
					Rs. A. P.		
Rev. Percy Knight; the editor ...	1904 Nov. 29	Rl. 8vo; 6	1st; 200	P.	.....	.....	
Ditto ditto ...	Dec. 29	Rl. 8vo; 4	1st; 200	P.	.....	.....	
Ditto ditto ...	1905 Feb. 7	Rl. 8vo; 4	1st; 200	P.	.....	.....	
Ditto ditto ...	1904 Dec. 22	Dy. 8vo. 10	1st; 450	P.	.....	.....	
Rev. Percy Knight	1905 Jan. 17	Dy. 8vo. 8	1st; 425	P.	.....	.....	
Ditto	Feb. 6	Dy. 8vo; 8	1st; 425	P.	.....	.....	
L. M. Gupta; the editor ...	1904 Dec. 30	D. fc. 4to; 4	1st; 750	P.	0 3 0 yearly.	.....	
Rev. Percy Knight; the I. S. S. Union.	„ 20	Dy. 8vo; 40	1st; 1,100	P.	0 3 0	.....	
Ditto ditto ...	1905 Jan. 19	Dy. 8vo; 38	1st; 1,070	P.	0 3 0	.....	
Ditto ditto ...	Feb. 18	Dy. 8vo; 40	1st; 1,100	P.	0 3 0	.....	
L. M. Gupta; the Y. M. C. A. ...	1904 Dec. 25	Rl. 8vo; 8	1st; 2,200	P.	0 8 0 yearly.	.....	
Ditto ditto ...	1905 Jan. 10	Rl. 8vo; 8	1st; 2,300	P.	0 8 0 yearly.	.....	
A. G. Watson; the International Tract Society.	1904 Dec. 1	Rl. 4 to; 16	1st; 3,500	P.	2 0 0 yearly.	.....	
Ditto ditto ...	„ 26	Dy. 8vo; 16	1st; 3,400	P.	.....	.....	
Rev. Percy Knight; the Indian National Council.	Nov. 28	Rl. 8vo; 20	1st; 1,700	P.	.....	.....	
Ditto ditto ...	Dec. 23	Rl. 8vo; 22	1st; 1,600	P.	.....	.....	
Ditto ditto ...	1905 Jan. 28	Rl. 8vo; 36	1st; 1,700	P.	.....	.....	
Sarvesvar Bhattácháryya; the editor.	1904 Nov. 17	D. cr. 4to; 8	1st; 500	P.	.....	.....	
Ditto ditto ...	Dec. 17	D. cr. 4to; 8	1st; 500	P.	.....	.....	
Ditto ditto ...	1905 Jan. 31	D. cr. 4to; 8	1st; 500	P.	.....	.....	
Rev. Percy. Knight; the Garo Mission.	1904. Dec. 28	Cr. 4to; 8	1st; 725	P.	....	.....	
Ditto ditto	1905. Feb. 1	Cr. 4to; 8	1st; 800	P.	...	.....	
Chandi Prasád Sinha	Jan. 15	Dy. 8vo; 22	1st; 500	P.	1 0 0 yearly.	The editor, Chupra.	
Ditto ditto	Feb. 5	Dy. 8vo; 16	1st; 500	P.	1 0 0 yearly.	Ditto.	
Vrindávan Dikshit; the editor ...	1904. Dec. 24	Dy. 8vo; 56	1st; 1,000	P.	0 8 0	.....	
Rám Chandra Mandal; the editor	Nov. 22	Dy. 8vo; 32	1st; 1,000	P.	0 3 0	.....	
Ditto ditto	Dec. 7	Dy. 8vo; 32	1st; 1,000	P.	0 3 0	.....	
Rev. Percy. Knight; the S. P. G. Mission.	„ 2	Dy. 4to; 4	1st; 500	P.	...	.....	
Ditto ditto	„ 29	Dy. 4to; 4	1st; 500	P.	...	.....	
Ditto ditto	1905. Feb. 3	Dy. 4to; 4	1st; 500	P.	...	.....	
N. Banerji & Son	„ 2	Rl. 12mo; 48	1st; 250	P.	0 4 0	.....	
Qázi Abdul Wáhed Hánáfi ...	1905. Jan. 1	Dy. 8vo; 44	1st; 500	L.	2 0 0 yearly.	The publisher, Lodikátrá, Patna.	
Ditto	Feb. 1	Dy. 8vo; 44	1st; 500	L.	2 0 0 yearly.	.....	
Ditto	Mar. 1	Dy. 8vo; 44	1st; 500	L.	2 0 0 arly.	.....	

1 Serial number.	2 Registration number.	3 Title, with an English trahslation of the same when not in that language, the language of the book, and the subject.	4 Name of author, translator, or editor of the book, or any part of it.	5 Place of printing and publication.
		BI-LINGUAL PERIODICALS.		
		I.—BENGALI AND ENGLISH PERIODICALS.		
		MEDICINE		
1	237	The Indian Homœopathic Reporter. A monthly paper. Vol. I. No. 10.	Edited by Sarat Chandra Ghosh, M.D.	28, Beadon Street; 2-1 and 2-2, College Street; Calcutta.
		MISCELLANEOUS.		
2	22	Bangabasi College Magazine. A monthly paper. Vol. II. Nos. 9 and 10 (together).	Edited by G. C. Basu	28, Beadon Street; 25-1, Scott's Lane; Calcutta.
3	6	Bhuvan Mohini Vinâ. "The Philanthropic." A monthly paper. Vol. I. No. 2.	Edited by D. P. Visvás	30-5, Madan Mitra's Lane, Calcutta; Dacca.
4	272	The Dawn. A monthly paper. Old Series. Vol. VIII. No. 3.	Edited by Satish Chandra Mukherji	91, Upper Circular Road; 22, Sankar Ghosh's Lane; Calcutta.
		RELIGION.		
5	80	Tattvabodhini Patriká. The Journal devoted to the Exposition of Truth. A monthly paper. No. 737. (B)	Edited by Dvijendra Náth Tagore ...	55, Upper Chitpur Road, Calcutta ...
6	259	Ditto ditto. No. 738. (B.)	Ditto ditto ...	Ditto ditto ...
7	411	Ditto ditto. No. 739. (B.)	Ditto ditto ...	Ditto ditto ...
		II.—BENGALI AND SANSKRIT PERIODICALS.		
	Letter No.	MISCELLANEOUS.		
1	239	Jyotirvid. The Astrologer. A monthly paper. 1st year. No. 10.	Edited by Vimalá Prasád Siddhánta Sarasvatí.	133, Másjidbári Street; 181, Máníktalá Street; Calcutta.
2	,,	Ditto ditto. 2nd year. No. 1	Ditto ditto ...	Ditto ditto ...
3	2150	Ditto ditto. 3rd year. No. 5	Ditto ditto ...	Ditto ditto ...
4	2152	Ditto ditto. 3rd year. No. 6	Ditto ditto ...	Ditto ditto ...
		RELIGION.		
5	29	Hindu Patriká. The Hindu Magazine. A monthly paper. 11th year. Nos. 7 and 8 (together).	Edited by Rai Yadu Náth Majumdár, Bahadur, M.A., B.L.	The Hindu Patriká Press, Jessore ...
6	33	Ditto ditto. 11th year. Nos. 9 and 10 (together).	Ditto ditto ...	Ditto ditto ...
7	2148	Sasangini Sajjantoshani. The Delight of Good Men with the Female Companion. A monthly paper. Vol. XV. No. 7.	Edited by Kedár Náth Datta Bhaktivinod.	133, Másjidbarí Street; 181, Maniktalá Street; Calcutta
8	363	Ditto ditto Vol. XV. No 8	Ditto ditto ...	Ditto ditto ...
		III.—ENGLISH AND SANSKRIT PERIODICALS.		
		MISCELLANEOUS.		
1	31	The Brahmacharin. The Celebate. A monthly paper. Vol. V. No. 12.	Edited by Rai Yadu Náth Majumdár Bahadur, M.A., B.L.	The Hindu Patriká Press, Jessore. ...

Quarter ending 31st March 1905—concluded.

6	7	8	9	10	11	12	13
ame or firm of printer and of publisher	Date of issue from the press or of the publication	Size and number of sheets, leaves, or pages.	Number of edition and number of copies of which the edition consists.	Printed or lithog'd.	Price at which the book is sold to the public.	Name and residence of the proprietor of copyright, or any part of it.	Number and date of Registration of Copy right
					Rs. A. P.		
N. Basu; the Hahnemann Home	1905. Jan. 3	Rl. 8vo; 32	1st; 1,000	P.	0 6 0	... ...	
N. Basu; the Bangabási College	1904. Dec. 23	Dy. 8vo; 24	1st; 500	P.	0 2 0	.....	
t Náth Pálit; the editor ...	„ 27	Rl. 8vo; 40	1st; 500	P.	0 8 0	.....	
C. Sányál; the editor ...	1905. Jan. 18	Rl. 8vo; 60	1st; 2,000	P.	1 0 0	... ...	
endra Náth Bhattácháryya ...	1904. Dec. 16	D.fc. 4to; 16	1st; 400	P.	0 6 0	.....	
Ditto ditto ...	1905. Jan. 14	D.fc. 4to; 16	1st; 400	P.	0 6 0	.....	
Ditto ditto	Feb. 21	D.fc. 4to; 16	1st; 400	P.	0 6 0	... ...	
ndr Náth Chakravarti; iddhes r Ghosh.	...	Dy. 8vo; 22	1st; ...	P.	1 0 0 yearly.	.....	
Dit ditto ...	...	Dy. 8vo; 24	1st;	P.	.....	.....	
Ditto ditto ...	1904. Dec. 19	Dy. 8vo; 24	1st; 750	P.	0 2 0	.....	
Ditto ditto ...	„ 19	Dy 8vo; 24	1st; 750	P.	0 2 0	.....	
P. Chatterji	1905. Jan. 5	Rl. 8vo; 64	1st; 1,500	P.	0 6 0	.....	
Ditto	Mar. 11	Rl. 8vo; 64	1st; 1,500	P.	0 6 0	.....	
rendra Náth Chakravarti; idhiká Prasád Datta.	1904. Dec. 19	Dy. 12mo; 36	1st; 500	P.	0 1 6	... ..	
Ditto ditto ...	1905. Feb. 23	Dy. 12mo; 36	1st; 450	P.	0 1 3	.....	
P. Chatterji	Jan. 24	Dy. 4to; 12	1st; 325	P.	0 6 0	.....	

Additional List of Copyright of Books which, having been previously received, could not be embodied in the accompanying Catalogue.

1	2	3	4	5	6	7	8	9
Serial number.	Register's book number.	The title of the book and the contents of the title-page with a translation into English of such title or contents when the same are not in the English language.	Name of author, editor, or translator of the book or any part of it.	Catalogue No.	Quarter.	Page of the Catalogue.	Date of registration of copyright.	The name and residence of proprietor of the copyright or of any portion of such copyright.
							1895.	
13	11	Srí Srí Rájalakshmí. (A Name.)	.....	587 & 588	3rd, 1902	4-5	7th Jan.	Yogendra Chandra Basu, 38-2, Bhavání Charan Datta's Street, Calcutta.
14	„	Model Bhaginí. The Model Sister.	.....	545	3rd, 1903	4-5	„ „	Ditto ditto.
15	„	Neḍá Haridás. The Bald-Headed Haridás.	.....	546	„ „	4-5	„ „	Ditto ditto.
16	„	Chinivás Charitámrita. The Nectar of the Life of Chinivás.	.....	547	„ „	4-5	„ „	Ditto ditto.
17	„	Vángálí Charit. Bengali Character.	.....	646	„ „	10-11	„ „	Ditto ditto.
18	12	Durgesa Nandiní. The Chieftain's Daughter.	Bankim Chandra Chatterji.	7262	2nd, 1888	6-7	„ „	Srímatí Rájalakshmí, 5, Pratáp Chatterji's Lane, Calcutta.
19	„	Kapála Kundalá. (A Name)	Ditto ...	8176	1st, 1889	10-11	„ „	Ditto ditto.
20	„	Mrináliní. (A Name) ...	Ditto ...	2487	4th, 1883	8-9	„ „	Ditto ditto.
21	„	Rájasinha. (A Name) ...	Ditto ...	1870	„ 1893	6-7	„ „	Ditto ditto.
22	„	Indirá. (A Name) ...	Ditto ...	1871	„ „	6-7	„ „	Ditto ditto.
23	„	Srímadbhagavad Gitá. The Divine Lay.	Ditto ...	124	„ 1902	28-29	„ „	Ditto ditto.
24	„	Rádhhárání. (A Name) ...	Ditto ...	1710	3rd, 1893	4-5	„ „	Ditto ditto.
25	„	Yugalánguríya. Two Rings	Ditto ...	1711	„ „	4-5	„ „	Ditto ditto.
26	„	Bankim Bábur Sahaj Rachaná Sikshá. Bankim Babu's Easy Instructions on Composition.	Ditto ...	4387	1st, 1897	12-13	„ „	Ditto ditto.
27	„	Sámya. Equality ...	Ditto ...	20	„ 1879	22-23	„ „	Ditto ditto.
28	13	Gupta Tattva Arthát Ami Ki Prakáre Jagate Asiyáchhi. Secret Mystery; or How I have been to this World?	Rev. A. Jewson ...	944	4th, 1904	12-13	„ „	The author, Calcutta.
							1905.	
29	14	On the Interpretation of Indian Statutes based on Indian Case Law.	Aghor Nath Ghosh, B.L., and Sarat Chandra Ghosh, B.L.	239	4th, 1904	15-17	7th Jan.	The authors.
30	15	Phawáed-u'-Am Betállum-is-Salátc Vál Korán, Marúf Vá Nemáj Ki Kitáb. Benefit of the Public in learning Namáj and Korán *alias* A Book on Namáj.	Maulví Muhammad Besháratullá.	7	„ „	28-29	„ „	The author, 14, Goálápá Lane, Hogal Kuria Street, Calcutta.
31	16	Hindustáni at a Glance ...	R. P. De ...	4	3rd, „	3-35	„ „	The author, 4, Tarafdár 2nd Lane, Kidderpore, Calcutta.
32	17	Sárasvata Sárvasva. Everything pertaining to Sárasvata Brahmanas.	Misra Govinda Náráyan Kumdiyá	10	4th, „	32-33	„ „	The author, Calcutta.
33	18	Giri's Granthávalí. Complete works of Babu Giris Chandra Ghosh. Part IV.	Giris Chandra Ghosh.	2505	„ 1894	2-3	„ „	The author, 13, Basupa Lane, Bagbazar, Calcutta.
34	„	Ditto ditto. Part VI	Ditto ...	732	„ 1900	8-9	„ „	Ditto ditto.
35	„	Maner Matan. After One's Heart.	Ditto ...	1525	3rd, 1901	6-7	„ „	Ditto ditto.
36	„	Bhránti. Error	Ditto ...	564	„ 1902	4-5	„ „	Ditto ditto.
37	19	First Pali Course	James Gray ...	1	„ 1904	34-35	„ „	The author, Rangoon.
38	20	Kaviráji Sikshá. Instruction in Ayurvedic Medicine. Vol. I.	Nagendra Nath Sen	819	4th, „	6-7	„ „	The author, 18-1, Lower Chitpur Road, Calcutta.
39	„	Ditto ditto. Vol. II	Ditto ...	820	„ „	6-7	„ „	Ditto ditto.
40	Regr. No. 32	Vasanter Ráni. The Queen of Spring.	Naní Lál Banerji	523	3rd, „	4-5	30th „	The author, Mainpuri, U. P.
41	„ 40	Srí Srí Ráma Krishna Punthi. The Book on Srí Srí Ráma Krishna.	Akshay Kumár Sen	6	1st, 1902	2-3	6th Mar.	The author, 115-2, Gray Street, Calcutta.
42	„ 42	Srí Krishna Chaitanya Prakás. The Appearance of Srí Krishna Chaitanya (Gauránga).	Púrna Chandra Dás Bhaktibhúshan.	100	4th, 1904	30-31	14th „	The author, Ukhadá, Khandra, Burdwan.

N.B.—Numbers 1 to 12 of 1905 are incorporated in the body of the catalogue for the quarter ending 31st March 1905.